BID DRAWINGS FOR

DEPOT PARK

DEPOT STREET AND EAST 4TH STREET, MORGAN HILL, CA 95037
VERDE DESIGN, INC. PROJECT NO. 1520400

VICINITY MAP AND CONSTRUCTION ROUTE

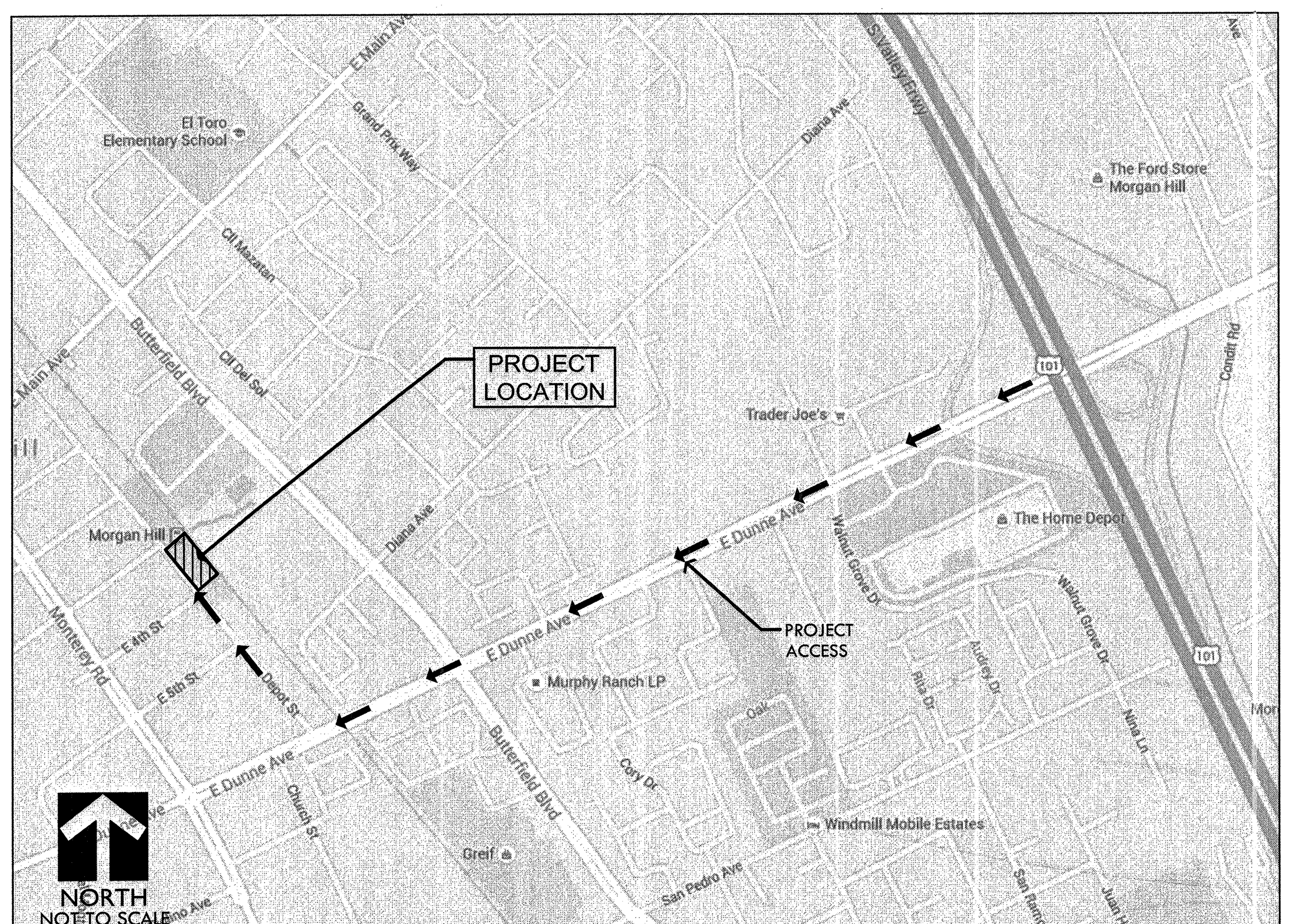

APPLICABLE CODES

1. 2013 CBC CHAPTER 35: PROVIDE ALL THE APPLICABLE/ADOPTED STANDARDS. WHERE A PARTICULAR STANDARD IS REFERENCED IN THE CODE BUT DOES NOT APPEAR AS AN ADOPTED STANDARD IT MAY STILL BE USED. APPLY ONLY THE PORTION OF THE STANDARD THAT IS APPLICABLE TO THE CODE SECTION WHERE THE STANDARD IS REFERENCED, NOT THE ENTIRE STANDARD.

   2013 BUILDING STANDARDS ADMINISTRATIVE CODE, PART 1, TITLE 24 C.C.R.
   CALIFORNIA BUILDING CODE (CBC), PART 2, TITLE 24 C.C.R.
   (2012 INTERNATIONAL BUILDING CODE VOLUMES 1-3 AND 2010 CALIFORNIA AMENDMENTS)
   CALIFORNIA ELECTRICAL CODE (CEC), PART 3, TITLE 24 C.C.R.
   (2011 NATIONAL ELECTRICAL CODE AND 2013 CALIFORNIA AMENDMENTS)
   CALIFORNIA MECHANICAL CODE (CMC) PART 4, TITLE 24 C.C.R.
   (2012 UNIFORM MECHANICAL CODE AND 2010 CALIFORNIA AMENDMENTS)
   CALIFORNIA PLUMBING CODE (CDC), PART 5, TITLE 24 C.C.R.
   (2012 UNIFORM PLUMBING CODE AND 2010 CALIFORNIA AMENDMENTS)
   2013 CALIFORNIA ENERGY CODE, PART 6, TITLE 24 C.C.R.
   2013 CALIFORNIA FIRE CODE, PART 9, TITLE 24 C.C.R.
   (2012 INTERNATIONAL FIRE CODE AND 2012 CALIFORNIA AMENDMENTS)
   CALIFORNIA EXISTING BUILDING CODE, PART 10, TITLE 24 C.C.R.
   (2012 INTERNATIONAL EXISTING BUILDING CODE AND 2012 CALIFORNIA AMENDMENTS)
   2013 CALIFORNIA "GREEN" BUILDING REQUIREMENTS OR CAL GREEN, PART 11, TITLE 24 C.C.R.
   2013 CALIFORNIA REFERENCED STANDARDS, PART 12, TITLE 24 C.C.R.
   2013 TITLE 19 C.C.R., PUBLIC SAFETY, STATE FIRE MARSHAL REGULATIONS.

   LIST OF FEDERAL CODES AND STANDARDS (IF APPLICABLE)
   AMERICANS WITH DISABILITIES ACT (ADA), TITLE II OR TITLE III
   FOR TITLE II: UNIFORM FEDERAL ACCESSIBILITY STANDARDS (UFAS) — 28 CFR 35.151(c)
   OR ADA STANDARDS FOR ACCESSIBLE DESIGN (APPENDIX A OF 28 CFR PART 36)
   FOR TITLE III: ADA STANDARDS FOR ACCESSIBLE DESIGN (APPENDIX A OF 28 CFR PART 36) — 28 CFR 36.406
   2010 AMERICANS WITH DISABILITIES ACT (ADA) STANDARDS FOR ACCESSIBLE DESIGN

   NOTE: TITLE II APPLIES TO PROJECTS FUNDED AND/OR USED BY STATE AND LOCAL GOVERNMENT SERVICES. TITLE III COVERS PUBLIC ACCOMMODATIONS AND COMMERCIAL FACILITIES. DEPENDING ON THE USE AND FUNDING, BOTH TITLE MAY APPLY TO THE PROJECT.

NFPA 13	AUTOMATIC SPRINKLER SYSTEMS	2013 EDITION
NFPA 14	STANDPIPE SYSTEMS	2013 EDITION
NFPA 17	DRY CHEMICAL EXTINGUISHING SYSTEMS	2013 EDITION
NFPA 17A	WET CHEMICAL SYSTEMS	2013 EDITION
NFPA 20	STATIONARY PUMPS	2013 EDITION
NFPA 24	PRIVATE MAINS	2013 EDITION
NFPA 72	NATIONAL FIRE ALARM CODE (CALIFORNIA AMENDED) (NOTE SEE UL STANDARD 1971 FOR "VISUAL DEVICES)	2013 EDITION
NFPA 253	CRITICAL RADIANT FLUX OF FLOOR COVERING SYSTEMS	2011 EDITION
NFPA 2001	CLEAN AGENT FIRE EXTINGUISHING SYSTEMS	2012 EDITION
ASME 17.1	ELEVATOR STANDARD	2013 EDITION

   REFERENCE CODE SECTIONS FOR APPLICABLE STANDARDS - 2013 CALIFORNIA BUILDING CODE (FOR SFM) REFERENCED STANDARDS CHAPTER 35

   ADA STANDARD FOR ACCESSIBLE DESIGN (APPENDIX A OF 28 CFR PART 36)

2. THE INTENT OF THESE DRAWINGS AND SPECIFICATIONS IS THAT WORK OF THE ALTERATION, REHABILITATION OR RECONSTRUCTION IS TO BE IN ACCORDANCE WITH TITLE 24, CALIFORNIA CODE OF REGULATIONS. SHOULD ANY EXISTING CONDITIONS SUCH AS DETERIORATION OR NON-COMPLYING CONSTRUCTION BE DISCOVERED WHICH IS NOT COVERED BY THE CONTRACT DOCUMENTS WHEREIN THE FINISHED WORK WILL NOT COMPLY WITH TITLE 24, CALIFORNIA CODE OF REGULATIONS, A CHANGE ORDER, OR A SEPARATE SET OF PLANS AND SPECIFICATIONS, DETAILING AND SPECIFYING THE REQUIRED WORK SHALL BE SUBMITTED TO AND APPROVED BY THE OWNER REPRESENTATIVE BEFORE PROCEEDING WITH THE WORK.

3. ALL EXISTING FIRE EXTINGUISHING SYSTEMS ARE IN COMPLIANCE WITH UL 300, CBC 904.11, CFC 904.11.

PREPARED BY

VERDE DESIGN
LANDSCAPE ARCHITECTURE
CIVIL ENGINEERING
SPORT PLANNING & DESIGN
2455 The Alameda
Santa Clara, CA 95050
tel: 408.985.7200
fax: 408.985.7260
www.VerdeDesignInc.com

REGISTERED LANDSCAPE ARCHITECT
DEREK McKEE
No. 4148
Signature
EXPIRATION DATE: DEC. 2017
STATE OF CALIFORNIA

ALL IDEAS, DESIGNS, ARRANGEMENTS, AND PLANS INDICATED OR REPRESENTED BY THIS DRAWING ARE OWNED BY AND THE PROPERTY OF VERDE DESIGN, INC. AND WERE CREATED, EVOLVED, AND DEVELOPED FOR USE ON AND IN CONNECTION WITH THE SPECIFIED PROJECT. NONE OF SUCH IDEAS, DESIGNS, ARRANGEMENTS OR PLANS SHALL BE USED, REPRODUCED, OR PUBLISHED BY ANY METHOD, IN WHOLE OR IN PART, OR DISCLOSED TO ANY PERSON, FIRM, OR CORPORATION FOR ANY PURPOSE WHATSOEVER WITHOUT WRITTEN PERMISSION OF VERDE DESIGN, INC.

SCOPE OF WORK

SITE IMPROVEMENTS INCLUDE: CLEAR, GRUB AND DEMOLITION OF EXISTING HARDSCAPE PAVING, FENCING AND SOFTSCAPE. CONTRACTOR TO COMPLETE; EARTHWORK, MATERIAL EXPORT, GRADING, SITE DRAINAGE, PARKING LOT, PLAYGROUND AREA, PAVING, SIDEWALK, FENCING, SIGNAGE, SOUND WALL, SITE FURNISHINGS, IRRIGATION, PLANTING AND ELECTRICAL. CONTRACTOR SHALL COORDINATE ALL WORK WITH THE CITY'S REPRESENTATIVE.

BID ALTERNATES

ADD. ALTERNATE NO.1- PRE-FABRICATED RESTROOM BUILDING:
INCLUDES: PREFABRICATED RESTROOM BUILDING, RESTROOM BUILDING PAD, AND UTILITY CONNECTIONS.

GENERAL NOTES

1. PRIOR TO BIDDING, THE GENERAL CONTRACTOR SHALL VISIT & INSPECT THE SITE & FAMILIARIZE THEMSELVES WITH EXISTING CONDITIONS AFFECTING THE NEW WORK. THE GENERAL CONTRACTOR SHALL NOT DISPUTE, COMPLAIN OR ASSERT THAT THERE IS ANY MISUNDERSTANDING IN REGARDS TO LOCATION, EXTENT, NATURE OR AMOUNT OF WORK TO BE PERFORMED UNDER THIS CONTRACT DUE TO THE CONTRACTOR'S FAILURE TO INSPECT THE SITE. CONTRACTOR SHALL NOTIFY THE OWNER OF ANY CONDITIONS, REQUIRING WORK, WHICH ARE NOT COVERED IN THE CONTRACT DOCUMENTS.
2. NO CONSTRUCTION SHALL COMMENCE WITHOUT THE OFFICIAL NOTICE TO PROCEED FROM THE OWNER.
3. THE GENERAL CONTRACTOR & SUBCONTRACTORS ARE RESPONSIBLE FOR LOCATING & VERIFYING ALL EXISTING UNDERGROUND UTILITIES IN ALL AREAS OF NEW WORK PRIOR TO COMMENCEMENT OF EXCAVATION. EXISTING UTILITIES SHOWN ON THE DRAWINGS ARE APPROXIMATE ROUTING LOCATIONS AS BEST DETERMINED FROM EXISTING DRAWINGS AND THE OWNER, BUT SHOULD NOT BE CONSTRUED TO REPRESENT ALL OF THE EXISTING UNDERGROUND UTILITIES. THE CONTRACTOR SHALL POTHOLE ALL EXISTING UTILITIES THAT MAY BE AFFECTED BY NEW FACILITIES IN THIS CONTRACT. VERIFY ACTUAL LOCATION AND DEPTH OF UTILITIES, AND REPORT POTENTIAL CONFLICTS TO THE OWNER PRIOR TO EXCAVATING FOR NEW FACILITIES.
4. CONTRACTOR SHALL TAKE ALL NECESSARY STEPS TO PROTECT ALL EXISTING UTILITIES, WHETHER SHOWN OR NOT, IN THE CONTRACT DOCUMENTS. CONTRACTOR SHALL BE RESPONSIBLE FOR ALL DAMAGES TO EXISTING UTILITIES CAUSED BY ITS OPERATIONS.
5. THE CONTRACTOR SHALL PROTECT ALL EXISTING ITEMS WITHIN SITE IMPROVEMENTS. IT IS THE RESPONSIBILITY OF THE CONTRACTOR TO REPAIR ALL DAMAGED AREAS TO THEIR ORIGINAL CONDITION OR BETTER AT CONTRACTOR'S EXPENSE TO THE SATISFACTION OF THE OWNER.
6. DIMENSIONS AND LOCATIONS OF EXISTING FACILITIES ARE APPROXIMATE AND SHALL BE FIELD VERIFIED BY CONTRACTOR. ANY DISCREPANCIES SHALL BE IMMEDIATELY BROUGHT TO THE ATTENTION OF THE OWNER.
7. ALL WORK SHALL CONFORM TO THE LATEST EDITION OF THE CALIFORNIA BUILDING CODE, CALIFORNIA PLUMBING CODE, CALIFORNIA FIRE CODE AND ALL APPLICABLE STATE AND LOCAL CODES AND ORDINANCES, AS WELL AS ADAPTED STANDARDS.
8. ALL NOTES ARE FOR GENERAL REFERENCE IN CONJUNCTION WITH, AND AS A SUPPLEMENT TO, THE WRITTEN SPECIFICATIONS AND DETAILS ASSOCIATED WITH THE CONTRACT DOCUMENTS.
9. THIS DRAWING SET SHALL BE USED IN CONJUNCTION WITH THE CSI FORMAT SPECIFICATIONS PUBLISHED IN BOOK FORM. COMBINED, THEY ARE HEREIN REFERRED TO AS THE "CONTRACT DOCUMENTS".
10. DIMENSIONS ON WORKING DRAWINGS TAKE PRECEDENCE OVER MEASURED ELEMENTS. CONTRACTOR SHALL NOT SCALE DRAWINGS.
11. ALL TYPICAL DETAILS SHALL APPLY UNLESS NOTED OTHERWISE.
12. CONTRACTOR SHALL PROVIDE ADEQUATE DUST CONTROL AND KEEP MUD AND DEBRIS OFF THE PUBLIC RIGHT-OF-WAY AT ALL TIMES.
13. ALL TRENCHES AND EXCAVATIONS SHALL BE CONSTRUCTED IN STRICT COMPLIANCE WITH THE APPLICABLE SECTIONS OF CALIFORNIA AND FEDERAL O.S.H.A. REQUIREMENTS AND OTHER APPLICABLE SAFETY ORDINANCES. CONTRACTOR SHALL BEAR FULL RESPONSIBILITY FOR TRENCH SHORING DESIGN AND INSTALLATION.
14. ANY ALTERATIONS OF EXISTING FACILITIES TO ACCOMMODATE THE INSTALLATION OF NEW WORK SHALL BE REVIEWED BY THE OWNER PRIOR TO COMMENCING WORK.
15. ANY DISRUPTION OF THE UTILITIES MUST BE COORDINATED AND APPROVED BY THE OWNER AND INSPECTOR OF RECORD PRIOR TO COMMENCING WORK.
16. ALL TEMPORARY WORK SHALL BE CONSIDERED A PART OF THIS CONTRACT AND NO EXTRA CHARGES WILL BE ALLOWED. THIS SHALL INCLUDE MINOR ITEMS OF MATERIAL OR EQUIPMENT NECESSARY TO MEET THE REQUIREMENTS AND INTENT OF THE PROJECT.
17. THE PLANS AND SPECIFICATIONS DO NOT UNDERTAKE TO SHOW OR LIST EVERY ITEM TO BE PROVIDED, BUT RATHER TO DEFINE THE REQUIREMENTS FOR A FULL AND WORKING SYSTEM FROM THE STANDPOINT OF THE END USER. FOR THIS REASON, WHEN AN ITEM NOT SHOWN OR LISTED IS CLEARLY NECESSARY FOR PROPER CONTROL/OPERATION OF EQUIPMENT WHICH IS SHOWN OR LISTED, THE CONTRACTOR SHALL PROVIDE AN ITEM WHICH WILL ALLOW THE SYSTEM TO FUNCTION PROPERLY AT NO INCREASE IN PRICE.
18. ALL CONTRACTORS SHALL REMOVE TRASH AND DEBRIS STEMMING FROM THEIR WORK ON A DAILY BASIS. PROJECT SITE SHALL BE MAINTAINED IN A CLEAN AND ORDERLY CONDITION.
19. THE DETAILS REFLECT THE DESIGN INTENT FOR TYPICAL CONDITIONS. THE CONTRACTOR SHALL VERIFY ALL FIELD CONDITIONS AND SHALL INCLUDE, IN HIS SCOPE, THE COST FOR COMPLETE FINISHED INSTALLATIONS, INCLUDING ANOMALIES, OF ALL TRADES.
20. NO WORK SHALL COMMENCE WITH UNAPPROVED MATERIALS. ANY WORK DONE WITH UNAPPROVED MATERIALS AND EQUIPMENT IS AT THE CONTRACTOR'S RISK AND IS SUBJECT TO REJECTION, REMOVED AND REPLACEMENT. SEE SPECIFICATIONS FOR SUBMITTAL AND SUBSTITUTION REQUIREMENTS.
21. CONSTRUCTION MATERIALS STORED ON THE SITE SHALL BE PROPERLY STACKED AND PROTECTED SO AS TO PREVENT DAMAGE OR DETERIORATION UNTIL USED. FAILURE IN THIS REGARD MAY BE CAUSE FOR REJECTION OF MATERIAL AND/OR WORK.
22. ALL EQUIPMENT SHALL BE FABRICATED FROM FIELD VERIFIED DIMENSIONS AND APPROVED SHOP DRAWINGS. COORDINATE MECHANICAL, PLUMBING AND ELECTRICAL EQUIPMENT.
23. CONTRACTOR SHALL PERFORM THEIR CONSTRUCTION AND OPERATIONS IN A MANNER WHICH WILL NOT ALLOW HARMFUL POLLUTANTS TO ENTER THE STORM DRAIN SYSTEM. TO ENSURE COMPLIANCE, THE CONTRACTOR SHALL IMPLEMENT THE APPROPRIATE BEST MANAGEMENT PRACTICE (BMP) AS OUTLINED IN THE BROCHURES ENTITLED "BEST MANAGEMENT PRACTICE FOR THE CONSTRUCTION INDUSTRY" ISSUED BY THE CALIFORNIA STORM WATER QUALITY ASSOCIATION, NONPOINT SOURCE POLLUTION CONTROL PROGRAM, TO SUIT THE CONSTRUCTION SITE AND JOB CONDITION. THE CONTRACTOR SHALL PRESENT HIS PROPOSED BMP AT THE PRECONSTRUCTION MEETING FOR DISCUSSION AND APPROVAL.
24. CONTRACTOR SHALL PROVIDE TEMPORARY CONSTRUCTION FENCING PER CONTRACT DOCUMENTS TO SERVE LIMIT OF WORK AREAS. FENCING MAY BE ADJUSTED DURING CONSTRUCTION BASED ON CONSTRUCTION SEQUENCE OR THE OWNER'S DIRECTION.
25. OVERNIGHT PARKING OF CONSTRUCTION EQUIPMENT IN THE STREET RIGHT-OF-WAY SHALL NOT BE PERMITTED.

CONTACT INFORMATION

ORGANIZATION	NAME	PHONE
OWNER CITY OF MORGAN HILL	CHRIS GHIONE	(408) 782-9154
CITY PROJECT MANAGER CITY OF MORGAN HILL	YAT CHUEN CHO	(408) 310-4641
LANDSCAPE ARCHITECT/ CIVIL ENGINEER VERDE DESIGN INC.	CORBIN M.E. SCHNEIDER JIA LI	(408) 850-3416 (408) 850-3464
ELECTRICAL ENGINEER AMERICAN CONSULTING ENGINEERS ELECTRICAL, INC.	SAMMY FERNANDEZ	(408) 236-2312
STRUCTURAL ENGINEER MESITI-MILLER ENGINEERING, INC	DALE HENDSBEE	(831) 426-3186

SHEET INDEX

SHEET NO.	SHEET DESCRIPTION
LANDSCAPE	
C0.0	COVER SHEET
L1.1	EXISTING CONDITIONS SURVEY PLAN
L2.1	EROSION AND SEDIMENT CONTROL PLAN
L3.1	DEMOLITION PLAN
L4.1	GRADING PLAN
L5.1	DRAINAGE PLAN
L6.1	LAYOUT PLAN - HARDSCAPE
L6.2	LAYOUT PLAN - SITE FURNISHINGS/ DRAINAGE
L7.1	MATERIAL AND DETAIL REFERENCE PLAN
L8.1	IRRIGATION PLAN
L9.1	PLANTING PLAN
D1.1	DRAINAGE DETAILS
D1.2	DRAINAGE DETAILS
D2.1	CONSTRUCTION DETAILS
D2.2	CONSTRUCTION AND FENCING DETAILS
D2.3	SITE FURNISHING DETAILS
D3.1	IRRIGATION & PLANTING DETAILS
D3.2	IRRIGATION & PLANTING DETAILS
D3.3	IRRIGATION & PLANTING DETAILS
ELECTRICAL	
E0.1	GENERAL NOTES, SYMBOL LIST, ABBREVIATIONS & FIXTURE SCHEDULE
E0.2	TITLE 24 EXTERIOR LIGHTING - PART 1
E0.3	TITLE 24 EXTERIOR LIGHTING - PART 2
E1.1	ELECTRICAL LIGHTING SITE PLAN
E1.2	WIRELESS ACCESS POINT & SECURITY CAMERA SITE PLAN
E2.1	SINGLE LINE DIAGRAM
E2.2	DATA & SECURITY CAMERA RISER DIAGRAM
E4.1	ELECTRICAL DETAILS
E4.2	ELECTRICAL DETAILS
STRUCTURAL	
S1.0	PIER FOUNDATION DETAILS
BID ALTERNATE NO.1- RESTROOM BUILDING	
R4.1	RESTROOM AND FOUNDATION DETAIL
R4.2	RESTROOM AND FOUNDATION DETAIL
RS2.1	FOUNDATION & ROOF PLAN
RSR1	SOILS REPORT

COVER SHEET
DEPOT PARK

VERDE DESIGN
LANDSCAPE ARCHITECTURE
CIVIL ENGINEERING
SPORT PLANNING & DESIGN
2455 The Alameda, Ste. 200
Santa Clara, CA 95050
tel: 408.985.7200
fax: 408.985.7260
www.verdedesigninc.com

HOR N/A	VERT N/A	JOB NUMBER 135013
DESIGN CMES	DATE	DATE 12-15-16
DRAWN RK/JL	CHECKED CMES/DM	APPROVED

KARL D. BJARKE- CITY ENGINEER
RCE 39416 EXP. 12/31/2017

City of Morgan Hill
Public Works Department
CITY OF MORGAN HILL
17575 Peak Avenue Morgan Hill, CA 95037 (408)778-6480, Fax (408)779-7236

NO.	DESCRIPTION	DATE	BY

Revisions

FILE NUMBER: 1520400
PRINT DATE: 12/07/16
SHEET NUMBER: C0.0

BID DRAWINGS

PATH
SHEET_TITLE_S
PROJECT_TITLE_S

DRAWING NAME: L:\2015\1520400-MH Downtown Park\CAD\Depot Park_CVR.dwg
PLOT DATE: 12-07-16 PLOTTED BY: station28

CITY OF MORGAN HILL

SITE MAPPING OF DEPOT STREET – APN 726-13-047
FIELD WORK WAS COMPLETED ON FEB 22, 2016 BY MH ENGINEERING CO, 408-779-7381

SITE MAPPING OF HILLTOP – APN 767-08-008, 767-07-042 & 065
FIELD WORK WAS COMPLETED ON MARCH 3, 2016 BY MH ENGINEERING CO, 408-779-7381

MEASUREMENTS SHOWN IN FEET AND DECIMALS THEREOF (XXX.XX')

COORDINATES ARE BASED ON A LOCAL COORDINATE SYSTEM
ELEVATIONS ARE BASED ON NAVD 88 (SCVWD BM002)

USERS OF THIS MAP ARE ADVISED TO CONTACT THE PREPAREER TO BE SURE THERE ARE NO PERTINANT REVISIONS TO THE COPY OBTAINED. PLEASE NOTE THAT CERTIFIED ORIGINALS AND/OR PRINTS ARE "WET SIGNED". ANY ORIGINALS AND/OR PRINTS NOT "WET SIGNED" ARE NOT CERTIFIED.

THIS MAP WAS PREPARED UNDER MY DIRECTION TO THE NORMAL STANDARDS OF CARE OF PROFESSIONAL LAND SURVEYORS IN THE STATE OF CALIFORNIA.

WILLIAM J. MCCLINTOCK, RCE 24893

NORTH

0' 5' 10' 20' 30'

SCVWD BM002
ELEVATION = 342.80 (NAVD 88)
BRASS DISC ON TOP OF CONCRETE CURB. N/W CORNER OF INTERSECTION MONTEREY ROAD AND WEST DUNNE AVE.

ABBREVIATIONS

SYM	DESCRIPTION	SYM	DESCRIPTION	SYM	DESCRIPTION	SYM	DESCRIPTION
AB	AGGREGATE BASE (CLASS AS NOTED)	DWY	DRIVEWAY	JP	JOINT POLE	SSMH	SANITARY SEWER MANHOLE
AC	ASPHALT CONCRETE	DDW	DIRT DRIVEWAY	MON	MONUMENT	SP	SERVICE POLE
AR	AIR RELIEF	EL., ELEV.	ELEVATION	NG	NATURAL GROUND ELEVATION	SW	SIDEWALK
BC	BEGIN OF CURVE	ELCT	ELECTROLIER	OH	OVERHEAD UTILITY LINE	TC	TOP OF CURB
BLDG	BUILDING	EP	EDGE OF PAVEMENT ELEVATION	PL	PROPERTY LINE	TOB	TOP OF BANK
BW	BACK OF WALK	EWAL	ENGLISH WALNUT TREE	PB	PULL BOX	TOE	TOE OF SLOPE
BO	BLOW OFF	EUC	EUCALYPTUS TREE	PGEV	PG&E VAULT	TP	TELEPHONE POLE
BWAL	BLACK WALNUT TREE	FH	FIRE HYDRANT	PP	POWER POLE	VO	VALLEY OAK TREE
BWF	BARB WIRE FENCE	FL	FLOWLINE	PSE	PUBLIC SERVICE EASEMENT	UG	UNDERGROUND GAS
CI	CURB INLET	FNC	FENCE	PVC	POLYVINYL CHLORIDE PIPE	USS	UNDERGROUND SANITARY SEWER
℄	CENTERLINE	FOG	FOG LINE	ROW	RIGHT OF WAY	USD	UNDERGROUND STORM DRAIN
CLF	CHAIN LINK FENCE	GB	GRADE BREAK	RCP	REINFORCED CONCRETE PIPE	UT	UNDERGROUND TELEPHONE
CLSW	CENTERLINE SWALE	HRAIL	HAND RAIL	RDWD	RED WOOD TREE	UW	UNDERGROUND WATER
CMP	CORRUGATED METAL PIPE	HCR	HANDICAP RAMP	RM	ELEVATION REFERENCE MARK	WL	WHITE LINE STRIPE
CO	CLEANOUT	HCS	HANDICAP STRIPE	SLB	SLAB	WO	WHITE OAK TREE
CP	CONTROL POINT	IP	IRON PIPE	SD	STORM DRAIN LINE	WM	WATER METER
DI	DROP INLET	LIP	LIP OF GUTTER	SDMH	STORM DRAIN MANHOLE	WV	WATER VALVE
DLITE	DAYLIGHT	LO	LIVE OAK TREE	SS	SANITARY SEWER LINE	YL	YELLOW LINE STRIPE

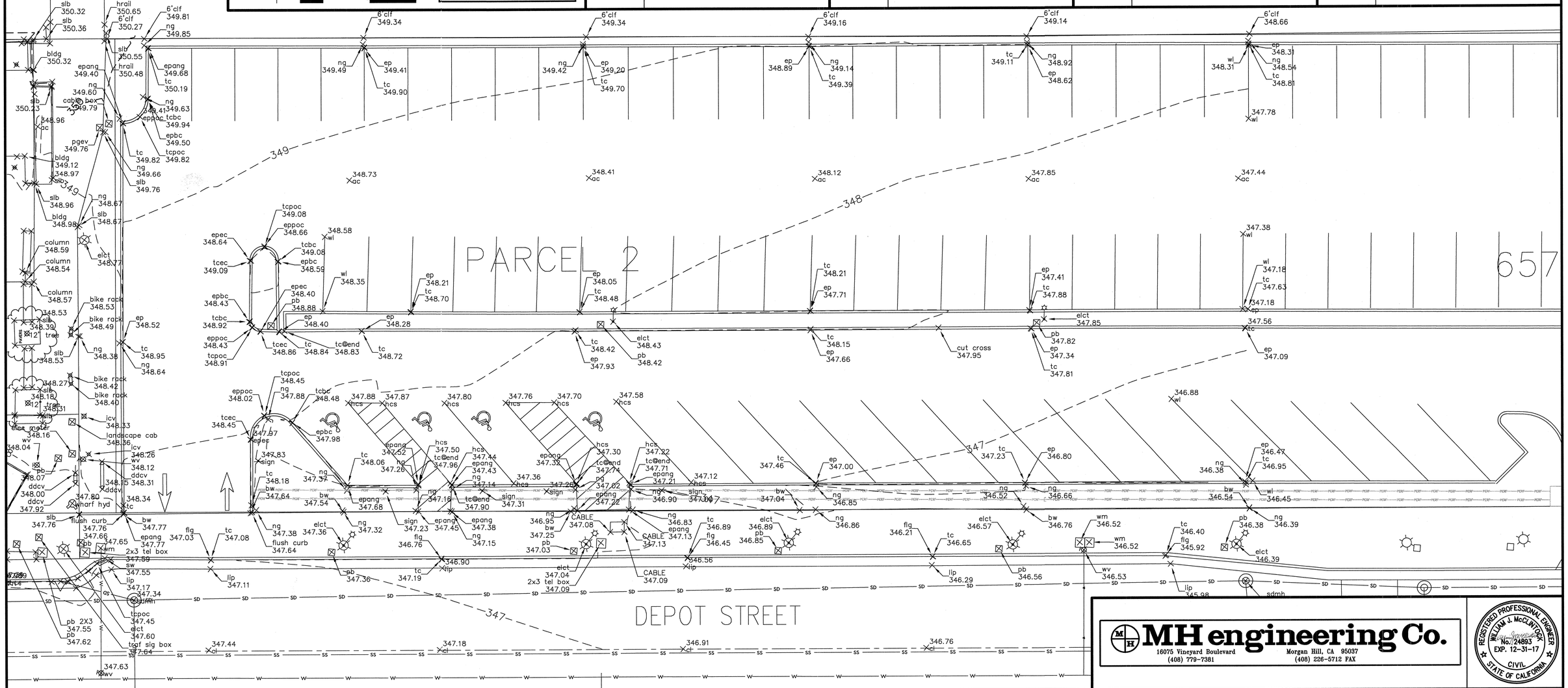

MH engineering Co.
16075 Vineyard Boulevard
(408) 779-7381
Morgan Hill, CA 95037
(408) 226-5712 FAX

REGISTERED PROFESSIONAL ENGINEER
WILLIAM J. McCLINTOCK
No. 24893
EXP. 12-31-17
CIVIL
STATE OF CALIFORNIA

NO.	DESCRIPTION	DATE	BY

Revisions

WORK ACCEPTED: INSPECTOR:
BY: DATE:

DRAWN: DESIGN:
CHECKED:
APPROVED: DATE: 12/6/16
KARL D. BURKE– CITY ENGINEER
RCE 39416 EXP. 12/31/2017

HOR: N/A
VERT: N/A
JOB NUMBER: 135013

CITY OF MORGAN HILL
City of Morgan Hill
Public Works Department
17575 Peak Ave. Morgan Hill, CA 95037 (408)778-6480, Fax (408)779-7236

VERDE DESIGN
LANDSCAPE ARCHITECTURE
CIVIL ENGINEERING
SPORT PLANNING & DESIGN
2455 The Alameda, Ste. 200
Santa Clara, CA 95050
tel: 408.985.7200
fax: 408.985.7260
www.verdedesigninc.com

DEPOT STREET AND
E 4TH STREET,
MORGAN HILL,
CA 95037

EXISTING CONDITIONS SURVEY PLAN
DEPOT PARK

FILE NUMBER: 1520400
PRINT DATE: 12/07/16
SHEET NUMBER: L1.1

BID DRAWINGS

SHEET LEGEND

PROPOSED	DESCRIPTION	
	LIMIT OF WORK	
	TEMPORARY CONSTRUCTION FENCING - REFER TO SPECIFICATIONS	
	EXISTING FENCING	
	CITY STANDARD CONSTRUCTION SIGN AT CONSTRUCTION ACCESS, CONTRACTOR TO COORDINATE WITH THE CITY.	J / D2.3
	FIBER ROLL BARRIER - REFER TO STORM WATER POLLUTION PREVENTION DOCUMENTS	A / -
	TEMPORARY CONCRETE WASHOUT FACILITY - PROVIDE A WASHOUT BIN FOR CONCRETE / CONSTRUCTION WASHOUT AND REMOVE AT END OF CONSTRUCTION	B / -
	CONSTRUCTION STAGING AREA	
	WHEEL WASH CONSTRUCTION ENTRY - STEEL PLATES	
PA	PLANTING AREA	
	FILTER FABRIC TO BE SECURELY ATTACHED TO DRAINAGE STRUCTURE TOP.	C / -

EROSION AND SEDIMENT CONTROL NOTES

1. THIS WATER POLLUTION CONTROL PLAN MAY NOT COVER ALL THE SITUATIONS THAT ARISE DURING CONSTRUCTION DUE TO UNANTICIPATED FIELD CONDITIONS. THE CONTRACTOR SHALL IMPLEMENT BEST MANAGEMENT PRACTICES (BMPS) LISTED IN THE STORM WATER POLLUTION PREVENTION PLAN (SWPPP), AND SHALL IMPLEMENT AND MAINTAIN THE SWPPP FOR THE PROJECT IN FULL COMPLIANCE WITH THE REVISED STATE REGULATIONS TO CONTROL THE DISCHARGE OF STORMWATER POLLUTANTS.
2. EROSION AND SEDIMENT CONTROL PLAN SHALL BE CONSTRUCTED DURING FIRST WEEK OF CONSTRUCTION.
3. EROSION AND SEDIMENT CONTROL SHALL REMAIN THROUGHOUT CONSTRUCTION AND REMAIN AND DISPOSED DURING MAINTENANCE PERIOD.
4. EROSION AND SEDIMENT CONTROL MAY BE ADJUSTED THROUGH CONSTRUCTION WITH APPROVAL OR AS DIRECTED BY OWNER'S REPRESENTATIVE.
5. CONTRACTOR TO IMPLEMENT BMPS TO KEEP A CLEAN SITE AND PREVENT RUNOFF POLLUTION.
6. GATHER AND STORE ALL CONSTRUCTION DEBRIS DAILY IN APPROPRIATE CONTAINERS WHICH ARE EMPTIED OR REMOVED ON AN AT-LEAST WEEKLY BASIS. WHEN APPROPRIATE, USE TARPS ON THE GROUND TO COLLECT FALLEN DEBRIS OR SPLATTERS THAT COULD CONTRIBUTE TO STORMWATER POLLUTION.
7. USE A BROOM OR OTHER DRY CLEANUP METHOD TO REMOVE ALL DIRT/MUD, GRAVEL, DEBRIS, REFUSE AND GREEN WASTE FROM ALL PAVED SURFACES AND THE PUBLIC SIDEWALK AND STREET PAVEMENT DAILY AND PRIOR TO RAIN.
8. CLEAN UP LEAKS, DRIPS AND SPILLS IMMEDIATELY.
9. COVER ALL TEMPORARY STOCKPILES SECURELY WITH A TARP, PLASTIC SHEETING OR SIMILAR MATERIAL TO PREVENT WINDBLOWN DISPERSAL OR RUNOFF OF ANY MATERIAL.
10. USE/CREATE A CONTAINED AND COVERED AREA ON THE SITE FOR THE STORAGE OF CEMENT BAGS, PAINTS, FLAMMABLES, OILS, FERTILIZERS, PESTICIDES, OR ANY OTHER MATERIALS USED ON THE PROJECT SITE THAT HAVE THE POTENTIAL FOR BEING DISCHARGED TO THE STORM DRAIN SYSTEM BY WIND, EXPOSURE TO RAINFALL OR IN THE EVENT OF A MATERIAL SPILL.
11. PROVIDE EROSION "PREVENTION" (SOIL STABILIZATION) AND SITE PERIMETER PROTECTION MEASURES SUCH AS FIBER ROLLS, SILT FENCE, AND/OR SEDIMENT TRAPS OR BASINS TO PREVENT ANY SEDIMENT FROM LEAVING THE WORK SITE. MAINTAIN THESE MEASURES TO REMAIN EFFECTIVE.
12. INSTALL AND MAINTAIN A CONSTRUCTION ENTRANCE TO MINIMIZE THE TRACKING OF DIRT, MUD, DUST AND/OR DEBRIS ONTO THE PUBLIC RIGHT-OF-WAY. DURING WET WEATHER, AVOID DRIVING VEHICLES WHERE MUD OR OTHER WASTES CAN BE TRACKED ONTO THE PUBLIC RIGHT-OF-WAY.
13. PROTECT ALL STORM DRAIN INLETS AND PERVIOUS CONCRETE SWALES IN THE VICINITY OF THE WORK SITE USING FILTER MATERIALS SUCH AS GRAVEL BAGS AND FILTER FABRIC. INLET PROTECTIONS SHALL BE INSTALLED PRIOR TO ANY ACTIVITY THAT MAY RESULT IN THE DISCHARGE OF MATERIAL TO THE STORM DRAIN AND AFTER INSTALLATION OF PERVIOUS CONCRETE SWALES. MAINTAIN THESE FILTER MATERIALS TO REMAIN EFFECTIVE AND REMOVE ANY ACCUMULATED SEDIMENT DEPOSITS. REMOVE THESE MATERIALS DURING PROJECT WRAP-UP.
14. DIVERT ON-SITE STORMWATER FLOWS AROUND AREAS OF EXPOSED OR DISTURBED SOIL TO PREVENT EROSION OR SEDIMENT RUNOFF.
15. DESIGN ANY SITE DE-WATERING (I.E., THE REMOVAL OF WATER FROM AN EXCAVATION PIT) EFFORTS TO PREVENT THE DISCHARGE OF ANY SEDIMENT, DEBRIS OR OTHER POLLUTANTS TO THE STREET, SIDEWALK OR STORMWATER DRAINAGE SYSTEM.
16. VACUUM ALL PAVEMENT SAW-CUTTING SLURRY AND REMOVE FROM SITE. DO NOT ALLOW PAVEMENT SAW-CUT SLURRY TO ENTER THE STORMWATER DRAINAGE SYSTEM.
17. AVOID CLEANING OR RINSING ANY MACHINERY, TOOLS, BRUSHES, EQUIPMENT, CONTAINERS, SURFACES, ETC. INTO A STREET, GUTTER, STORM DRAIN OR WATERWAY.
18. ENSURE THAT CONCRETE SUPPLY TRUCKS AND/OR CONCRETE/PLASTER OPERATIONS DO NOT DISCHARGE WASH WATER OR WASTES INTO THE STREET, GUTTERS OR STORM DRAINS. CONCRETE TRUCKS SHALL HAVE A SELF-CONTAINED WASH-OUT SYSTEM OR DISCHARGE TO A DEDICATED, SECURE ON-SITE WASH-OUT.
19. PREVENT THE DISCHARGE OF ANY TREATMENT OR RINSE WATERS FROM SURFACE FINISHING EFFORTS FOR ARCHITECTURAL COPPER, CEMENT, PLASTER, ETC., TO THE STORMWATER DRAINAGE SYSTEM OR ANY WATERWAY.

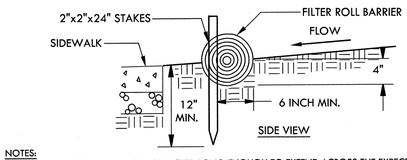

NOTES:
1. FILTER BARRIER SHALL BE CONSTRUCTED LONG ENOUGH TO EXTEND ACROSS THE EXPECTED FLOW PATH AND AS APPROVED BY THE ADMINISTRATOR.
2. FILTER ROLL (8" DIAMETER) SHALL BE PLACED INTO THE KEY TRENCH AND STAKES ON BOTH SIDES OF THE ROLL WITHIN 6' OF EACH END AND THEN EVERY 3' TO 4' WITH 2"x2"x24" STAKES. STAKES ARE TYPICALLY DRIVEN IN ON ALTERNATING SIDES OF THE ROLL. ADJACENT ROLLS SHALL TIGHTLY ABUT.
3. CLEAR SUBGRADE SO THAT REMOVAL OF ALL LOCAL DEVIATIONS AND TO REMOVE LARGE STONES OR DEBRIS THAT WILL INHIBIT INTIMATE CONTACT OF THE FIBER ROLL WITH THE SUB GRADE.
4. PRIOR TO ROLL INSTALLATION, CONTOUR A CONCAVE TRENCH (2") DEEP ALONG THE PROPOSED INSTALLATION ROUTE. FIBER ROLL SHALL BE INSTALLED ALONG THE SIDE OF WALKS AND AROUND THE CATCH BASINS. THE BOTTOM EDGE OF THE FIBER ROLL SHALL EXTEND TO AND ACROSS THE BOTTOM OF THE TRENCH. THE TRENCH SHALL BE BACKFILLED TO 4" ABOVE GROUND AND COMPACTED TO BURY AND SECURE THE BOTTOM OF THE FIBER ROLL.
5. CONTRACTOR SHALL MAKE INSPECTIONS WEEKLY DURING THE WET SEASON (NOVEMBER 15 - APRIL 15), MONTHLY DURING THE DRY SEASON AND IMMEDIATELY AFTER EACH RAINFALL TO DETERMINE IF REPAIRS AND SEDIMENT REMOVAL IS REQUIRED. SEDIMENT SHALL BE REMOVED BEFORE IT HAS REACHED ONE THIRD THE HEIGHT OF THE FILTER FABRIC.

A FILTER ROLL BARRIER NTS

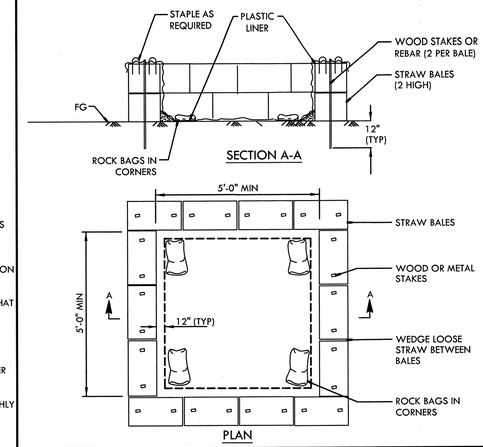

B TEMPORARY CONCRETE WASHOUT FACILITY NTS

NOTES:
CONTRACTOR TO CONFORM TO NOTES PROVIDED IN DETAIL A, THIS SHEET.

C INLET FILTER FOR EXISTING AND PROPOSED STORM DRAINS NTS

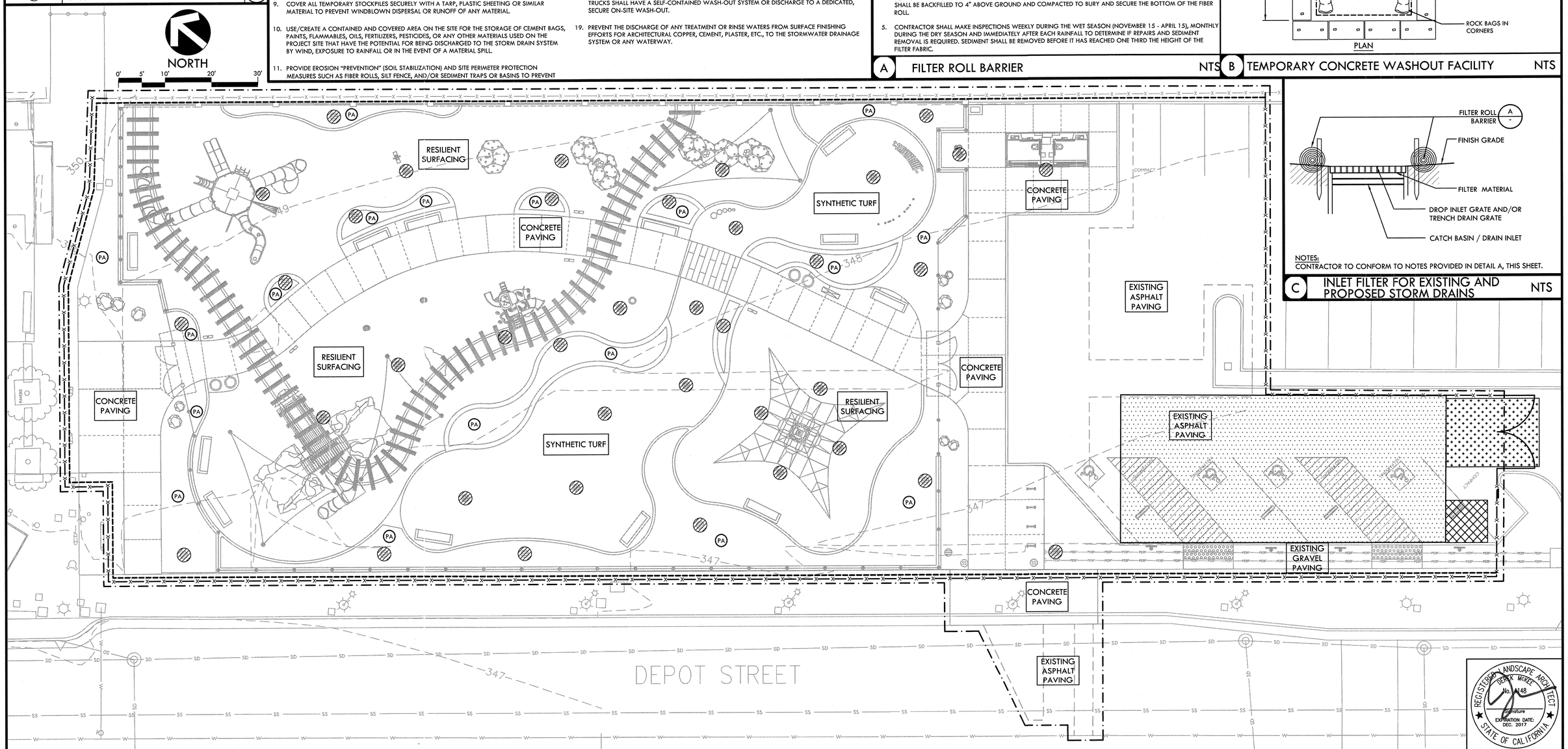

REGISTERED LANDSCAPE ARCHITECT
DEREK MCREE
No. 4148
Signature
EXPIRATION DATE: DEC. 2017
STATE OF CALIFORNIA

NO.	DESCRIPTION	DATE	BY

Revisions

WORK ACCEPTED: INSPECTOR:
BY: DATE:

DRAWN: RK / JL
DESIGN: CMES
CHECKED: CMES / DM
APPROVED: DATE: 12/15/16
KARL D. EMARKE- CITY ENGINEER
RCE 39416 EXP. 12/31/2017

HOR: N/A
VERT: N/A
JOB NUMBER: 135013

CITY OF MORGAN HILL
City of Morgan Hill
Public Works Department
17575 Peak Ave. Morgan Hill, CA 95037 (408)778-6480, Fax (408)779-7236

VERDE DESIGN
LANDSCAPE ARCHITECTURE
CIVIL ENGINEERING
SPORT PLANNING & DESIGN
2455 The Alameda, Ste. 200
Santa Clara, CA 95050
tel: 408.985.7200
fax: 408.985.7290
www.verdedesigninc.com

DEPOT STREET AND E 4TH STREET, MORGAN HILL, CA 95037

EROSION AND SEDIMENT CONTROL PLAN
DEPOT PARK

FILE NUMBER: 1520400
PRINT DATE: 12/07/16
SHEET NUMBER: L2.1

BID DRAWINGS

DEMOLITION NOTES

1. THE CONTRACTOR SHALL PERFORM ALL CLEARING, DEMOLITION, SITE PREPARATIONS AND REMOVAL OF OBSTRUCTIONS NECESSARY FOR THE PROPER EXECUTION OF ALL WORK CONTAINED IN THE CONTRACT DOCUMENTS.
2. THE CONTRACTOR SHALL VISIT THE SITE PRIOR TO BID SUBMITTAL TO DETERMINE THE EXACT EXTENT AND DEPTH OF SITE DEMOLITION REQUIRED AND VERIFY COMPLIANCE WITH DRAWINGS. THE OWNER'S REPRESENTATIVE SHALL BE NOTIFIED IMMEDIATELY OF ANY DISCREPANCIES.
3. THE CONTRACTOR SHALL VERIFY THE LOCATIONS OF ALL EXISTING UTILITIES, STRUCTURES, AND SERVICES BEFORE COMMENCING WORK. THE LOCATIONS OF UTILITIES, STRUCTURES, AND SERVICES SHOWN IN THE CONTRACT DOCUMENTS SHALL BE DEEMED TO BE APPROXIMATIONS ONLY. ALL DISCREPANCIES BETWEEN WHAT IS SHOWN AND THE ACTUAL FIELD CONDITIONS SHALL BE REPORTED TO THE OWNER'S REPRESENTATIVE. THE CONTRACTOR SHALL CONTACT UNDERGROUND SERVICE ALERT (USA) AT (800) 227-2600 PRIOR TO ANY DEMOLITION OR EXCAVATION. UPON COMPLETION OF USA MARKING OPERATIONS, THE CONTRACTOR SHALL RECORD ALL UTILITY MARKINGS ON A SEPARATE SET OF DRAWINGS AND BE PROVIDED TO OWNER AT COMPLETION OF CONSTRUCTION. THIS SET SHALL BE KEPT ON-SITE FOR REFERENCE FOR DURATION OF CONTRACT. NOTIFY THE OWNER IMMEDIATELY SHOULD CONFLICTS ARISE, AND REDIRECT WORK TO AVOID DELAY.
4. ALL EXISTING ITEMS ARE TO REMAIN UNLESS OTHERWISE NOTED. THE CONTRACTOR SHALL BE RESPONSIBLE FOR REPAIRING OR REPLACING, AT CONTRACTOR'S EXPENSE, ANY EXISTING ITEM DAMAGED OR DESTROYED BY CONSTRUCTION OPERATIONS. THE CONTRACTOR SHALL ALSO BE RESPONSIBLE FOR REPAIRING OR REPLACING ANY AND ALL DAMAGES TO ADJACENT PROPERTIES. THE DAMAGED ITEMS SHALL BE RESTORED TO AN "AS-WAS" OR BETTER CONDITION OR REPLACED PER THE DISCRETION OF THE OWNER.
5. PRIOR TO ANY DEMOLITION WORK, THE CONTRACTOR SHALL INSTALL SELF-SUPPORTING INTERLOCKING CHAIN-LINK TEMPORARY CONSTRUCTION FENCING TO ENCLOSE AND SECURE THE PROJECT AREA LIMIT OF WORK. THE FENCING SHALL CONTAIN PEDESTRIAN AND/OR VEHICULAR ACCESS GATES AS NECESSARY AND SHALL BE MINIMUM SIX (6) FEET HIGH, WITH A TOP AND BOTTOM RAIL KNUCKLED TOP AND BOTTOM SELVAGE (NO BARBED WIRE PERMITTED). THE CONSTRUCTION FENCING WORK SHALL BE SUBJECT TO THE DISCRETION OF THE OWNER.
6. PRIOR TO ANY DEMOLITION WORK, THE CONTRACTOR SHALL PROTECT ALL EXISTING PLANT MATERIALS NOT SCHEDULED FOR REMOVAL BY INSTALLING TEMPORARY FOUR (4) FOOT HIGH "BLAZE ORANGE" CONSTRUCTION SAFETY FENCING AT THE TREE DRIP LINES OR THE PERIMETER PERIMETER OF THE TREE GROUPINGS. THE FENCING SHALL BE SECURED WITH DRIVEN METAL STAKES. ALL TREE PROTECTION WORK SHALL BE SUBJECT TO THE DISCRETION OF THE OWNER.
7. THE CONTRACTOR SHALL PROVIDE THE REQUIRED COORDINATION OF ANY EXISTING UTILITY FOR ITS TEMPORARY DISCONNECTION, PROTECTION, REMOVAL AND/OR STORAGE AS MAY BE REQUIRED DURING CONSTRUCTION. THE CONTRACTOR SHALL COORDINATE WITH THE OWNER TO DETERMINE WHETHER TEMPORARY SERVICES ARE NECESSARY.
8. DEMOLITION SHALL INCLUDE THE REMOVAL OF DESIGNATED HARDSCAPE ITEMS AND ANY FOUNDATION, BASE MATERIAL OR STRUCTURAL SUPPORT RELATED TO THE ITEM. FOR PLANT MATERIAL, THIS SHALL INCLUDE STUMPS AND ROOTS OVER TWO (2) INCHES IN DIAMETER. REMOVAL SHALL INCLUDE DISPOSAL OFF-SITE IN A LEGAL MANNER ACCEPTABLE TO THE OWNER AND IN COMPLIANCE WITH ALL FEDERAL, STATE, AND LOCAL CODES AND ORDINANCES.
9. LOCATION OF THE UNDERGROUND UTILITIES IS AN APPROXIMATION AND SHOULD BE FIELD VERIFIED BY THE CONTRACTOR.
10. ANY (E) UTILITIES TO REMAIN SHALL RECEIVE A NEW UTILITY BOX IF LOCATED WITHIN LIMIT OF WORK.

DEMOLITION LEGEND

SYM	DESCRIPTION
	LIMIT OF WORK, REFER TO EROSION CONTROL PLAN
	CONSTRUCTION FENCING - REFER TO SPECIFICATIONS.
	EXISTING AREA TO BE CLEARED AND GRUBBED - REFER TO SPECIFICATIONS.
	EXISTING ASPHALT PAVING TO BE REMOVED.
	EXISTING CONCRETE TO BE DEMOLISHED AND REMOVED.
	EXISTING GRAVEL TO BE REMOVED.
	SAWCUT EXISTING PAVING
—	CITY STANDARD CONSTRUCTION SIGN AT CONSTRUCTION ACCESS, CONTRACTOR TO COORDINATE WITH THE CITY. (J / D2.3)
ITEMS TO BE DEMOLISHED AND REMOVED	
1	EXISTING SIGN, INCLUDING FOOTING AND POST TO BE DEMOLISHED AND REMOVED.
2	EXISTING UTILITY BOXES AND LIGHT POLE, INCLUDING FOOTING, TO BE DEMOLISHED AND REMOVED. CONTRACTOR SHALL REFER TO ELECTRICAL PLANS FOR MORE INFORMATION.
3	EXISTING CURB TO BE DEMOLISHED AND REMOVED.
4	EXISTING CURB AND GUTTER TO BE DEMOLISHED AND REMOVED.
5	EXISTING SIDEWALK TO BE DEMOLISHED AND REMOVED. CONTRACTOR SHALL SAWCUT AND DEMOLISH THE SIDEWALK TO THE NEAREST SCORE JOINT.
6	NOT USED
7	EXISTING PARKING STRIPING TO BE REMOVED.
8	EXISTING 18" PVC PERFORATED LINES AND ROCKS TO BE REMOVED. VERIFY LOCATION IN FIELD.
9	EXISTING WATER METER, METER BOX, WATER LINE AND GATE VALVE TO BE REMOVED. CAP WATER LINE 12" DOWNSTREAM OF "T".
ITEMS TO BE PROTECTED OR RELOCATED	
A	EXISTING SIGN AND FOOTING TO BE REMOVED. REUSE SIGN AND POST FOR NEW ADA PARKINGS.
B	EXISTING FENCE TO REMAIN AND BE PROTECTED.
C	EXISTING LIGHT POLE AND FOOTING TO BE REMOVED AND RELOCATED. SEE MATERIAL PLAN AND ELECTRICAL PLAN.
D	EXISTING PLANTING TO REMAIN AND BE PROTECTED.
E	EXISTING PAVING TO REMAIN AND BE PROTECTED.
F	END OF EXISTING CURB TO REMAIN AND BE PROTECTED. SAW CUT AT EACH END.
G	EXISTING CABLE BOX, CONDUIT AND WIRES TO REMAIN AND BE PROTECTED.
H	EXISTING PG&E VAULT OR ELECTRICAL PULL BOX TO REMAIN AND BE PROTECTED.
I	EXISTING BIKE RACKS TO REMAIN AND BE PROTECTED.
J	EXISTING GRAVEL TO REMAIN AND BE PROTECTED.
K	EXISTING ELECTROLIER TO REMAIN AND BE PROTECTED.
L	EXISTING IRRIGATION CONTROL VALVE TO REMAIN AND BE PROTECTED.
M	EXISTING IRRIGATION CONTROLLER CABINET TO REMAIN AND BE PROTECTED.
N	EXISTING BACKFLOW PREVENTER TO REMAIN AND BE PROTECTED.
O	EXISTING PARKING STRIPING TO REMAIN AND BE PROTECTED.
P	CUT AND CAP TEMPORARILY EXISTING 18" PVC PERFORATED LINES. VERIFY LOCATION IN FIELD.
Q	EXISTING 18" PVC PERFORATED LINES TO REMAIN AND BE PROTECTED.
R	EXISTING RAILING TO REMAIN AND BE PROTECTED.

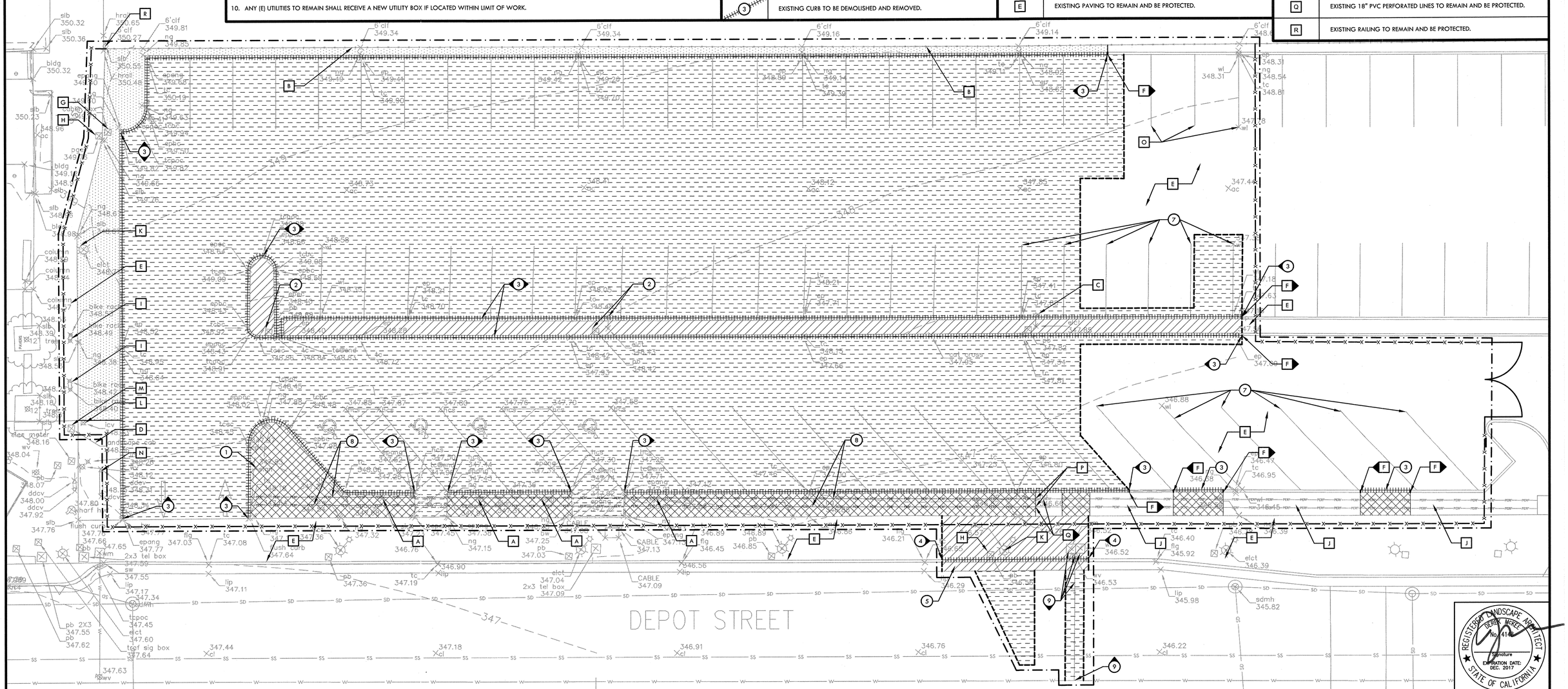

REGISTERED LANDSCAPE ARCHITECT
DEREK MCKEE
No. 4148
Signature
EXPIRATION DATE: DEC. 2017
STATE OF CALIFORNIA

NO.	DESCRIPTION	DATE	BY

Revisions

WORK ACCEPTED: INSPECTOR:
BY: DATE:

DRAWN: RK / JL
DESIGN: CMES
CHECKED: CMES / DM
APPROVED: DATE: 12/15/16
KARL D. BURKE– CITY ENGINEER
RCE 39416 EXP. 12/31/2017

HOR: N/A
VERT: N/A
JOB NUMBER: 135013

CITY OF MORGAN HILL
City of Morgan Hill
Public Works Department
17575 Peak Ave. Morgan Hill, CA 95037 (408)778-6480, Fax (408)779-7236

VERDE DESIGN
LANDSCAPE ARCHITECTURE
CIVIL ENGINEERING
SPORT PLANNING & DESIGN
2455 The Alameda, Ste. 200
Santa Clara, CA 95050
tel: 408.985.7200
fax: 408.985.7290
www.verdedesigninc.com

DEPOT STREET AND
E 4TH STREET,
MORGAN HILL,
CA 95037

DEMOLITION PLAN
DEPOT PARK

FILE NUMBER: 1520400
PRINT DATE: 12/07/16
SHEET NUMBER: L3.1

BID DRAWINGS

GRADING LEGEND

SYM	DESCRIPTION
	AREA DRAINS AND CATCH BASINS

GRADING LEGEND

SYM	DESCRIPTION
FS 11.40	PROPOSED FINISH SURFACE ELEVATION OF HARDSCAPE / RUBBER
HP 12.50	HIGH POINT
LP/RIM 10.50	LOW POINT/ RIM ELEVATION OF DRAIN
TC 10.50	TOP OF CURB
TW 13.50	TOP OF WALL
BC 12.74	BOTTOM OF CURB
SG 12.74	SUBGRADE OF RESILIENT RUBBER SURFACING - TOP OF SUBGRADE
SGT 12.74	SUBGRADE OF SYNTHETIC TURF - TOP OF SUBGRADE
11.1	EXISTING ELEVATION
	CONFORM TO EXISTING GRADE
	SWALE CENTERLINE AND DIRECTION
	LIMIT OF GRADING - CONFORM TO EXISTING GRADES AT THIS LINE

GRADING NOTES

1. EXISTING GRADES ARE BASED ON INFORMATION PROVIDED BY: MH ENGINEERING CO. CONTRACTOR SHALL VERIFY EXISTING GRADES FOR ACCURACY PRIOR TO THE START OF GRADING, NOTIFY THE OWNER'S REPRESENTATIVE IMMEDIATELY SHOULD CONFLICTS ARISE AND REDIRECT WORK TO AVOID DELAY.
2. THE CONTRACTOR SHALL VERIFY THE LOCATIONS OF ALL EXISTING UTILITIES, STRUCTURES AND SERVICES BEFORE COMMENCING WORK. THE LOCATIONS OF UTILITIES, STRUCTURES AND SERVICES SHOWN IN THE CONTRACT DOCUMENTS SHALL BE DEEMED TO BE APPROXIMATIONS ONLY. ALL DISCREPANCIES BETWEEN WHAT IS SHOWN AND THE ACTUAL FIELD CONDITIONS SHALL BE REPORTED TO THE OWNER'S REPRESENTATIVE. THE CONTRACTOR SHALL CONTACT UNDER GROUND SERVICE ALERT (USA) AT (800) 227-2600 PRIOR TO ANY DEMOLITION OR EXCAVATION. UPON COMPLETION OF USA MARKING OPERATIONS, CONTRACTOR SHALL RECORD ALL UTILITY MARKINGS ON A SEPARATE SET OF DRAWINGS. THIS SET SHALL BE KEPT ON-SITE FOR REFERENCE FOR DURATION OF CONTRACT.
3. PROPOSED GRADES SHALL MEET EXISTING GRADES WITH A SMOOTH AND CONTINUOUS TRANSITION SO AS TO AVOID TRAPPING WATER. CONTRACTOR SHALL NOTIFY OWNER'S REPRESENTATIVE IF PUDDLING IS SUSPECTED AND REDIRECT WORK SO AS TO AVOID DELAY WHILE AWAITING RESPONSE.
4. ALL EXISTING DRAINAGE STRUCTURES, BOXES, UTILITY VAULTS ETC. SHALL BE BROUGHT TO FINAL FINISH GRADE PRIOR TO FINAL SURFACE TREATMENT.

NORTH

0' 5' 10' 20' 30'

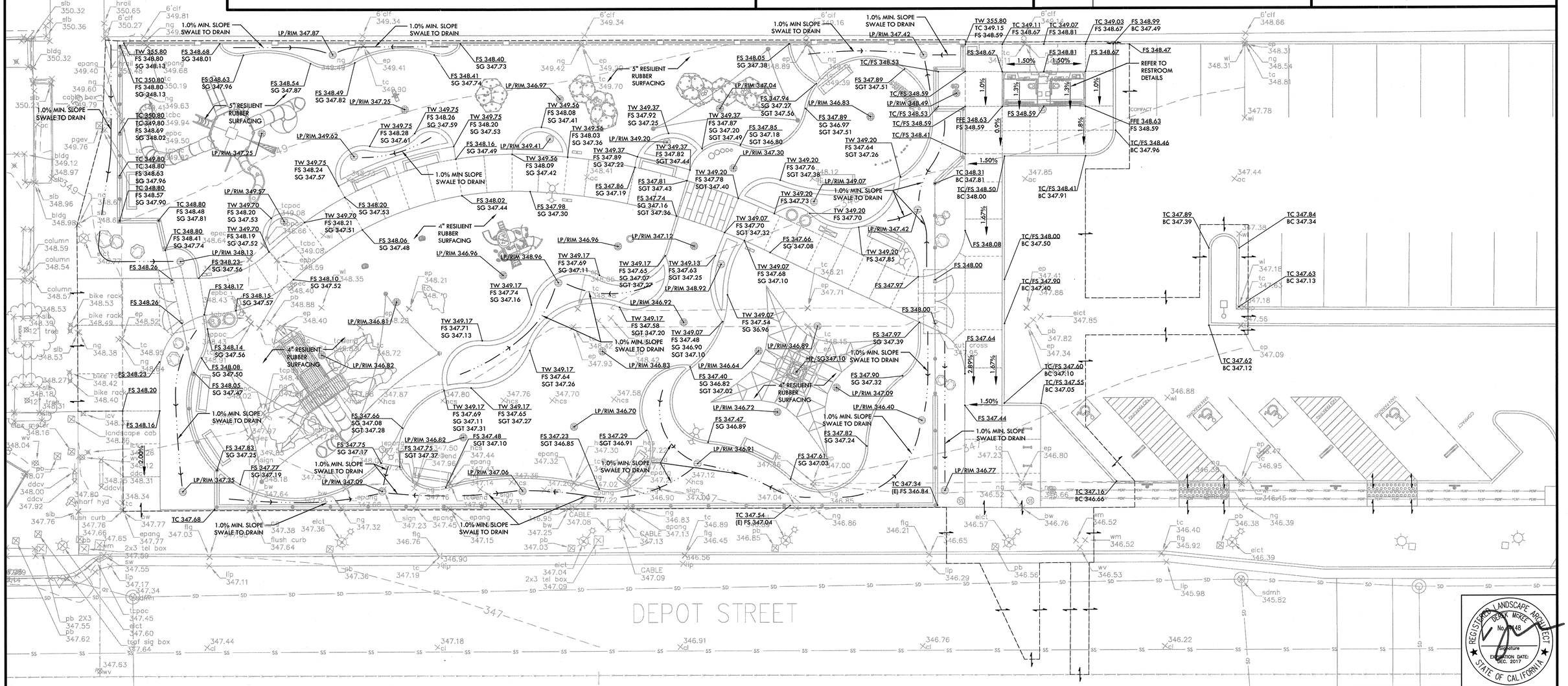

REGISTERED LANDSCAPE ARCHITECT
DEREK McKEE
No. 4148
Signature
EXPIRATION DATE: DEC. 2017
STATE OF CALIFORNIA

NO.	DESCRIPTION	DATE	BY

Revisions

WORK ACCEPTED: INSPECTOR:
BY: DATE:

DRAWN: RK / JL
DESIGN: CMES
HOR: N/A
CHECKED: CMES / DM
VERT: N/A
APPROVED: K Bjarke
DATE: 12/15/16
JOB NUMBER: 135013
KARL D. BJARKE - CITY ENGINEER
RCE 39416 EXP. 12/31/2017

CITY OF MORGAN HILL
City of Morgan Hill
Public Works Department
17575 Peak Ave. Morgan Hill, CA 95037 (408)778-6480, Fax (408)779-7236

VERDE DESIGN
LANDSCAPE ARCHITECTURE
CIVIL ENGINEERING
SPORT PLANNING & DESIGN
2455 The Alameda, Ste. 200
Santa Clara, CA 95050
tel: 408.985.7200
fax: 408.985.7260
www.verdedesigninc.com

DEPOT STREET AND
E 4TH STREET,
MORGAN HILL,
CA 95037

GRADING PLAN
DEPOT PARK

FILE NUMBER: 1520400
PRINT DATE: 12/07/16
SHEET NUMBER: L4.1

BID DRAWINGS

DRAINAGE & UTILITY LEGEND

SYM	DESCRIPTION	DETAIL NUMBER / SHEET NUMBER	SYM	DESCRIPTION	DETAIL NUMBER / SHEET NUMBER
	CATCH BASIN CONNECTION	I / D1.1	AD	AREA DRAIN	
	SANITARY SEWER MANHOLE	B,C / D1.2	CB	CATCH BASIN	
SD	SOLID WALL STORM DRAIN - CORRUGATED HIGH DENSITY POLYETHYLENE (CHDPE) TYPE - SIZE PER PLAN	C,D / D1.1	JB	JUNCTION BOX	
SS	SANITARY SEWER PIPE - POLYVINYL CHLORIDE PIPE (P.V.C.) TYPE, WITH 36" COVER - SIZE PER PLAN.	C,D / D1.1	INV	INVERT	
	CLEANOUT IN LANDSCAPE	E / D1.2	LF	LINEAL FEET	
SS	SANITARY SEWER CLEANOUT	E / D1.1	COTG	CLEANOUT TO GRADE	
	AREA DRAIN IN LANDSCAPE	D / D1.2	S=0.5%	SLOPE	
	CATCH BASIN UNDER PLAY SURFACE/ SYNTHETIC TURF	H / D1.1	SSMH	SANITARY SEWER MANHOLE	
	BRASS FLOOR DRAIN IN PAVING	I / D2.3	MIN.	MINIMUM	

DRAINAGE & UTILITY NOTES

1. THE CONTRACTOR SHALL VERIFY THE LOCATIONS OF ALL EXISTING UTILITIES, STRUCTURES, AND SERVICES BEFORE COMMENCING WORK. THE LOCATIONS OF UTILITIES, STRUCTURES, AND SERVICES SHOWN IN THE CONTRACT DOCUMENTS SHALL BE DEEMED TO BE APPROXIMATIONS ONLY. ALL DISCREPANCIES BETWEEN WHAT IS SHOWN AND THE ACTUAL FIELD CONDITIONS SHALL BE REPORTED TO THE OWNER'S REPRESENTATIVE. THE CONTRACTOR SHALL CONTACT UNDER GROUND SERVICE ALERT (USA) AT (800) 227-2600 PRIOR TO ANY DEMOLITION OR EXCAVATION. UPON COMPLETION OF USA MARKING OPERATIONS, CONTRACTOR SHALL RECORD ALL UTILITY MARKINGS ON A SEPARATE SET OF DRAWINGS. THIS SET SHALL BE KEPT ON-SITE FOR REFERENCE FOR DURATION OF CONTRACT.
2. ALL EXISTING DRAINAGE STRUCTURES, BOXES, UTILITY VAULTS ETC. TO REMAIN, SHALL BE BROUGHT TO FINAL FINISH GRADE PRIOR TO FINAL SURFACE TREATMENT.
3. THE CONTRACTOR IS TO PROTECT DRAINAGE SYSTEM FROM DEBRIS, INCLUDING SOIL, ROCK MATERIAL, AND TRASH FROM ENTERING THE PIPE DURING CONSTRUCTION. CONTRACTOR SHALL AVOID PLACING CONSTRUCTION VEHICLES OVER INSTALLED DRAINAGE TRENCHES TO PREVENT CRUSHING OF PIPE.
4. COORDINATE ALL SLEEVING AND UTILITY LOCATIONS AS SHOWN ON THE PLANS AND DETAILS CONTAINED WITHIN THESE CONTRACT DOCUMENTS.
5. THE CONTRACTOR IS TO ENSURE THAT ALL REMAINING ACTIVE AND NEW DRAINAGE AND UTILITY LINES ARE PROTECTED AND UNDAMAGED FROM TRENCHING AND FOOTING EXCAVATIONS FOR NEW FOOTINGS, PARTICULARLY FOR NEW FENCING AND WALLS.
6. ALL ABANDONED STORM LINES SHALL REMAIN IN PLACE UNLESS IN CONFLICT WITH PROPOSED DRAINAGE, UTILITY, OR SUBGRADING OPERATIONS, IN WHICH CASE ABANDONED PIPE IN CONFLICT SHALL BE REMOVED. REMAINING ABANDONED STORM PIPE SHALL BE SEALED WITH APPROPRIATELY SIZED CONCRETE CAP (3 SACK MIX) 6" ENVELOPE OUTSIDE AND INSIDE DIAMETER OF PIPE.
7. PRIOR TO ALL DRAINAGE AND UTILITY WORK, CONTRACTOR SHALL BE RESPONSIBLE FOR VERIFYING ALL POTENTIAL DRAINAGE CONNECTIONS AND EXISTING UTILITY BY POTHOLING. IN ADDITION, ALL DOWNSTREAM CONNECTIONS TO EXISTING STRUCTURES SHALL BE THE START OF THESE OPERATIONS, AND GRADES SHALL BE VERIFIED.
8. WHEN WORK HAS TO OCCUR UNDER THE DRIPLINE OF EXISTING TREES NOT SCHEDULED FOR REMOVAL, THE CONTRACTOR SHALL USE ALL POSSIBLE CARE TO AVOID INJURY TO THE TREES AND TREE ROOTS. GRADE IN LINES RADIAL TO THE EXISTING TREES RATHER THAN TANGENTIAL. ALL PARTIAL CUTS OR TEARS THROUGH ROOTS TWO INCHES IN DIAMETER AND LARGER SHALL BE CUT CLEAN. TRENCHES ADJACENT TO TREES SHALL BE FILLED WITHIN 24 HOURS AFTER EXCAVATION, BUT WHERE THIS IS NOT POSSIBLE, THE SIDE OF THE TRENCH ADJACENT TO THE TREE, AND ANY EXPOSED ROOTS SHALL BE KEPT SHADED AND MOIST WITH DAMPENED BURLAP OR CANVAS.
9. EXISTING UTILITY SERVICES TO SURROUNDING AREAS AND USERS ARE TO BE MAINTAINED AT ALL TIMES.
10. ALL NEW STORM DRAIN INLETS SHALL BE CLEARLY MARKED WITH THE WORDS "NO DUMPING! DRAINS TO BAY", OR EQUIVALENT, AS APPROVED BY THE CITY PUBLIC WORKS DEPARTMENT. PERMANENTLY AFFIXED THERMOPLASTIC, METALLIC OR PLASTIC LAMINATE STYLE MARKERS ARE EXAMPLES OF ACCEPTABLE FORMS.
11. CONTRACTOR SHALL DRILL AND PLACE PLAYGROUND EQUIPMENT FOOTING POSTS PRIOR TO TRENCHING FOR STORM DRAIN LINE. CONTRACTOR TO ADJUST LOCATION OF DRAINAGE AND UTILITY ITEMS IF IN CONFLICT WITH PLAY EQUIPMENT FOOTING.

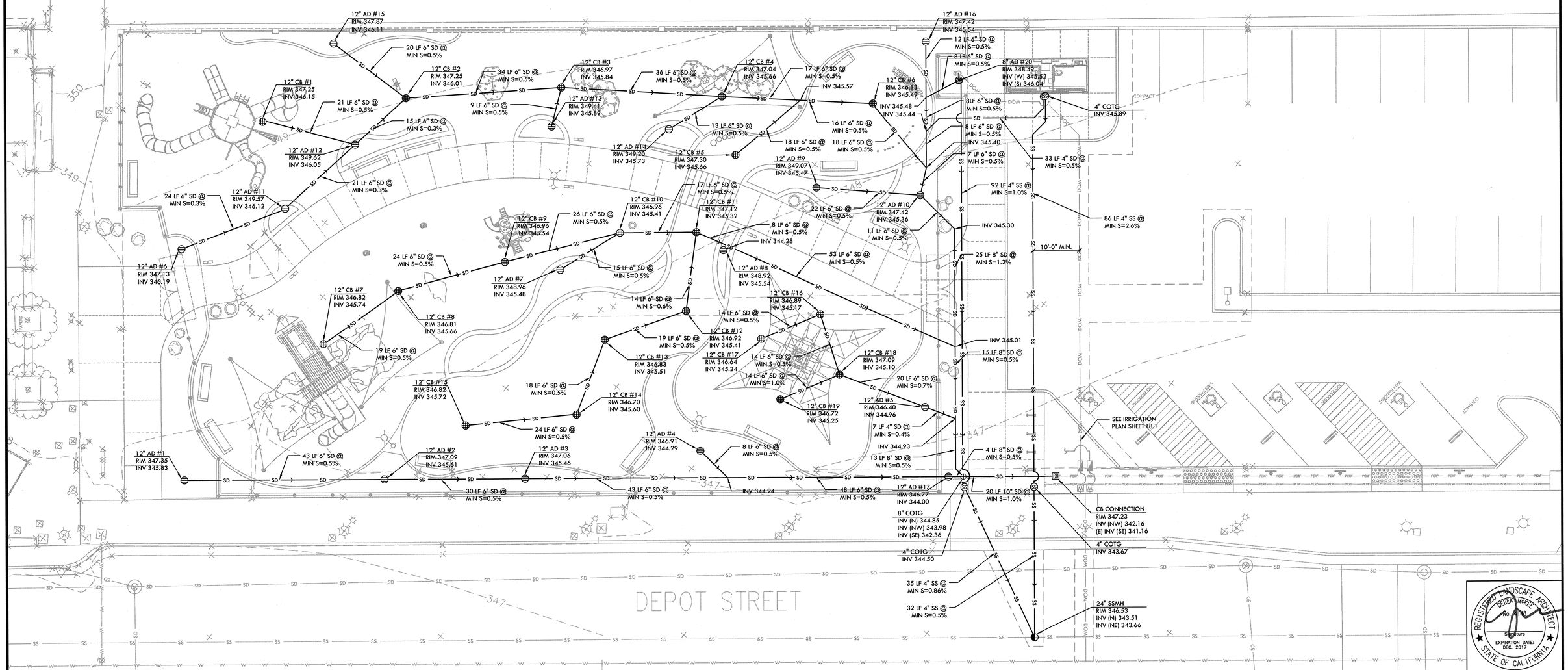

NO.	DESCRIPTION	DATE	BY

Revisions

WORK ACCEPTED: INSPECTOR:
BY: DATE:

DRAWN: RK / JL
DESIGN: CMES
CHECKED: CMES / DM
APPROVED: DATE: 12/15/16
KARL D. BUHLER - CITY ENGINEER RCE 39416 EXP. 12/31/2017

HOR: N/A
VERT: N/A
JOB NUMBER: 135013

CITY OF MORGAN HILL
City of Morgan Hill
Public Works Department
17575 Peak Ave. Morgan Hill, CA 95037 (408)778-6480, Fax (408)779-7236

VERDE DESIGN
LANDSCAPE ARCHITECTURE
CIVIL ENGINEERING
SPORT PLANNING & DESIGN
2455 The Alameda, Ste. 200
Santa Clara, CA 95050
tel: 408.985.7200
fax: 408.985.7260
www.verdedesigninc.com

DEPOT STREET AND
E 4TH STREET,
MORGAN HILL,
CA 95037

DRAINAGE PLAN
DEPOT PARK

FILE NUMBER: 1520400
PRINT DATE: 12/07/16
SHEET NUMBER: L5.1

BID DRAWINGS

LAYOUT LEGEND

SYM	DESCRIPTION
N 6+21.95 / E 4+97.08	NORTHING/EASTING LAYOUT COORDINATE CALLOUT
(CLP)	CENTERLINE OF POST OR POLE
(COB)	CENTER OF BASIN / DRAINAGE / UTILITY STRUCTURE
(FOC)	FACE OF CURB
(RAD)	RADIUS POINT
(TAN)	TANGENT POINT

P.O.B. (POINT OF BEGINNING) - CONTROL LINE 'A' TO BE FROM POINT OF BEGINNING MAG NAIL 348.43 TO 347.97 FND BD LS 6868. BASELINE 'A' IS 61°59'8" FROM CONTROL LINE 'A' AT POINT OF BEGINNING. BASELINE 'B' IS 90° FROM BASELINE 'A'. FOR EXACT LOCATION OF CONTROL POINT 'A' AND POINT OF BEGINNING, CONTRACTOR TO VERIFY IN FIELD.

SYM	DESCRIPTION
POB	POINT OF BEGINNING
	ANCHOR POINT FOR BASELINE A
R10'	RADIUS POINT / CENTER MARK
90°	PROPOSED ANGLE BETWEEN ELEMENTS
ALIGN	ALIGN EDGES OF ELEMENTS
	CENTER LINES
	BASELINE
	CONTROL LINE

LAYOUT NOTES

1. THE CONTRACTOR SHALL COORDINATE ALL CONSTRUCTION ELEMENTS INCLUDING UTILITY LOCATIONS AND REQUIRED SLEEVING PRIOR TO INSTALLATION. VERIFY CRITICAL DIMENSIONS, REFERENCE POINT LOCATIONS AND CONSTRUCTION CONDITIONS PRIOR TO INITIATING CONSTRUCTION. TEMPORARY BENCHMARKS OR REFERENCE POINTS SHALL BE SET BY THE CONTRACTOR AS NECESSARY. NOTIFY THE OWNER'S REPRESENTATIVE IMMEDIATELY SHOULD DISCREPANCY ARISE AND REDIRECT WORK TO AVOID DELAYS.
2. ALL DIMENSIONS SHALL BE VERIFIED IN FIELD AND CHALKED, STRING LINED OR FLAGGED BY THE CONTRACTOR PRIOR TO CONSTRUCTION. ANY MINOR ADJUSTMENTS MADE TO ACHIEVE OVERALL DESIGN LAYOUT SHALL BE ACCEPTED BY THE OWNER PRIOR TO CONSTRUCTION.
3. LAYOUT IS BASED ON THE POINT(S) OF BEGINNING (P.O.B.) AND BASELINE(S) OR GRID SYSTEM AS SHOWN. DIMENSIONS SHOWN ARE ROUNDED TO THE NEAREST INCH.
4. ALL LAYOUT AND GRADES SHALL BE COMPLETED BY A LICENSED SURVEYOR.

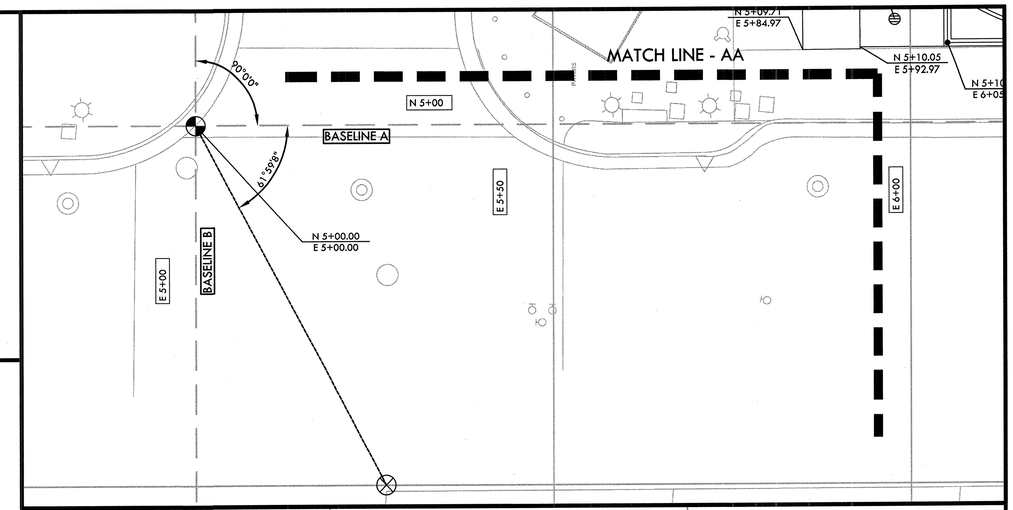

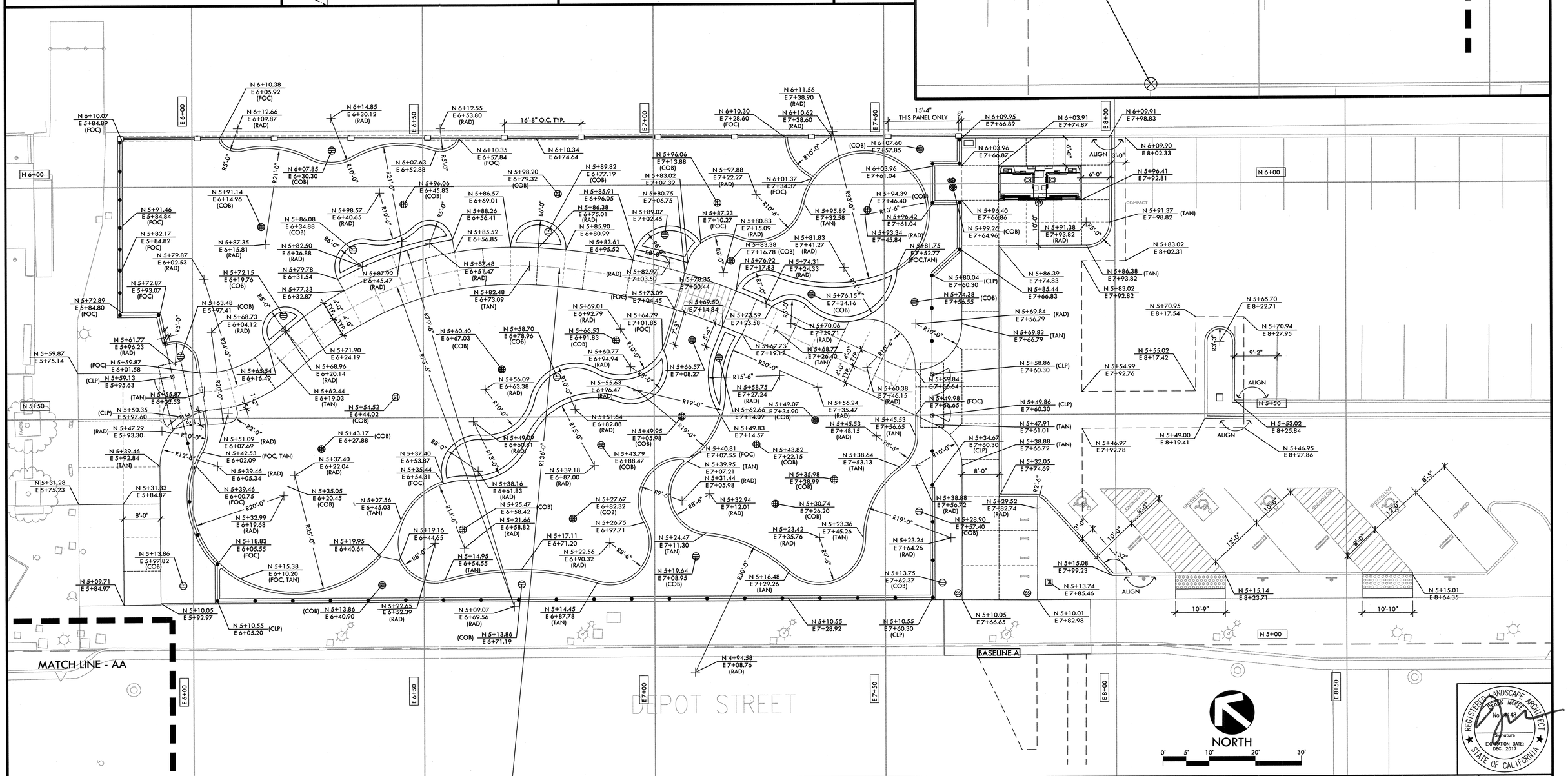

REGISTERED LANDSCAPE ARCHITECT
DEREK MCKEE
No. 4148
Signature
EXPIRATION DATE: DEC. 2017
STATE OF CALIFORNIA

NO.	DESCRIPTION	DATE	BY

Revisions

WORK ACCEPTED: INSPECTOR:
BY: DATE:

DRAWN: RK / JL
DESIGN: CMES
HOR: N/A
CHECKED: CMES / DM
VERT: N/A
APPROVER:
DATE: 12/15/16
JOB NUMBER: 135013
KARL D. BJARKE - CITY ENGINEER
RCE 39416 EXP. 12/31/2017

CITY OF MORGAN HILL

City of Morgan Hill
Public Works Department
17575 Peak Ave. Morgan Hill, CA 95037 (408)778-6480, Fax (408)779-7236

VERDE DESIGN

LANDSCAPE ARCHITECTURE
CIVIL ENGINEERING
SPORT PLANNING & DESIGN
2455 The Alameda, Ste. 200
Santa Clara, CA 95050
tel: 408.985.7200
fax: 408.985.7260
www.verdedesigninc.com

DEPOT STREET AND
E 4TH STREET,
MORGAN HILL,
CA 95037

LAYOUT PLAN - HARDSCAPE
DEPOT PARK

FILE NUMBER: 1520400
PRINT DATE: 12/07/16
SHEET NUMBER: L6.1

BID DRAWINGS

LAYOUT LEGEND

SYM	DESCRIPTION
N 6+21.95 / E 4+97.08	NORTHING/EASTING LAYOUT COORDINATE CALLOUT
(CLP)	CENTERLINE OF POST OR POLE
(COB)	CENTER OF BASIN / DRAINAGE / UTILITY STRUCTURE
(FOC)	FACE OF CURB
(RAD)	RADIUS POINT
(TAN)	TANGENT POINT

P.O.B. (POINT OF BEGINNING) - CONTROL LINE 'A' TO BE FROM POINT OF BEGINNING MAG NAIL 348.43 TO 347.97 FND BD LS 6868. BASELINE 'A' IS 61°59'8" FROM CONTROL LINE 'A' AT POINT OF BEGINNING. BASELINE 'B' IS 90° FROM BASELINE 'A'. FOR EXACT LOCATION OF CONTROL POINT 'A' AND POINT OF BEGINNING, CONTRACTOR TO VERIFY IN FIELD.

SYM	DESCRIPTION
POB	POINT OF BEGINNING
	ANCHOR POINT FOR BASELINE A
R10'	RADIUS POINT / CENTER MARK
90°	PROPOSED ANGLE BETWEEN ELEMENTS
ALIGN	ALIGN EDGES OF ELEMENTS
	CENTER LINES
	BASELINE
	CONTROL LINE

LAYOUT NOTES

1. THE CONTRACTOR SHALL COORDINATE ALL CONSTRUCTION ELEMENTS INCLUDING UTILITY LOCATIONS AND REQUIRED SLEEVING PRIOR TO INSTALLATION. VERIFY CRITICAL DIMENSIONS, REFERENCE POINT LOCATIONS AND CONSTRUCTION CONDITIONS PRIOR TO INITIATING CONSTRUCTION. TEMPORARY BENCHMARKS OR REFERENCE POINTS SHALL BE SET BY THE CONTRACTOR AS NECESSARY. NOTIFY THE OWNER'S REPRESENTATIVE IMMEDIATELY SHOULD DISCREPANCY ARISE AND REDIRECT WORK TO AVOID DELAYS.
2. ALL DIMENSIONS SHALL BE VERIFIED IN FIELD AND CHALKED, STRING LINED OR FLAGGED BY THE CONTRACTOR PRIOR TO CONSTRUCTION. ANY MINOR ADJUSTMENTS MADE TO ACHIEVE OVERALL DESIGN LAYOUT SHALL BE ACCEPTED BY THE OWNER PRIOR TO CONSTRUCTION.
3. LAYOUT IS BASED ON THE POINT(S) OF BEGINNING (P.O.B.) AND BASELINE(S) OR GRID SYSTEM AS SHOWN. DIMENSIONS SHOWN ARE ROUNDED TO THE NEAREST INCH.
4. ALL LAYOUT AND GRADES SHALL BE COMPLETED BY A LICENSED SURVEYOR.

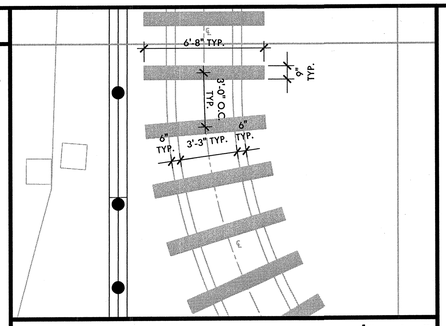

ENLARGEMENT SCALE: $\frac{1}{4}$"=1'-0"

NORTH

0' 5' 10' 20' 30'

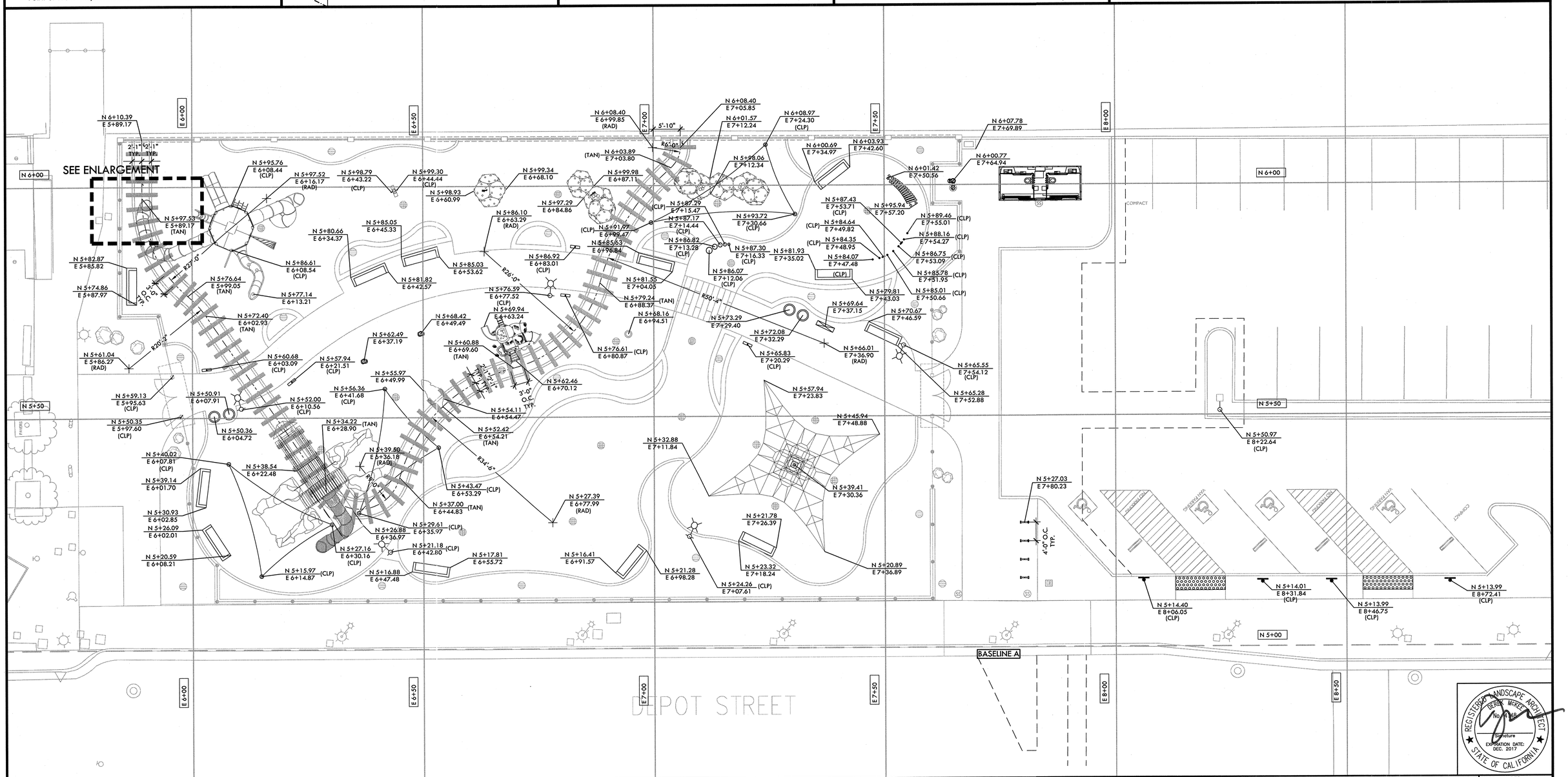

REGISTERED LANDSCAPE ARCHITECT
BERNIE MCKEE
No. 4148
Signature
EXPIRATION DATE: DEC. 2017
STATE OF CALIFORNIA

NO.	DESCRIPTION	DATE	BY

Revisions

WORK ACCEPTED: INSPECTOR:
BY: DATE:

DRAWN: RK / JL
DESIGN: CMES
CHECKED: CMES / DM
APPROVED: 12/15/16
KARL D. BRAKE- CITY ENGINEER RCE 39416 EXP. 12/31/2017
DATE:
HOR: N/A
VERT: N/A
JOB NUMBER: 135013

CITY OF MORGAN HILL

City of Morgan Hill
Public Works Department
17575 Peak Ave. Morgan Hill, CA 95037 (408)778-6480, Fax (408)779-7236

VERDE DESIGN
LANDSCAPE ARCHITECTURE CIVIL ENGINEERING SPORT PLANNING & DESIGN
2455 The Alameda, Ste. 200 Santa Clara, CA 95050 tel: 408.985.7200 fax: 408.985.7260 www.verdedesigninc.com

DEPOT STREET AND E 4TH STREET, MORGAN HILL, CA 95037

LAYOUT PLAN - SITE FURNISHING/ DRAINAGE
DEPOT PARK

FILE NUMBER: 1520400
PRINT DATE: 12/07/16
SHEET NUMBER: L6.2

BID DRAWINGS

MATERIAL LEGEND

SYM	DESCRIPTION	DTL REF
	ASPHALT PAVING - PATCH	D D1.1
	COLORED CONCRETE PAVING - PEDESTRIAN CONCRETE - DAVIS COLORS SAND STONE 5237	B D2.2
	STAMPED COLOR CONCRETE WITH WOOD PATTERN - DAVIS COLORS - RUSTIC BROWN 6058 - REFER TO SPECIFICATIONS	B D2.2
	SYNTHETIC TURF - REFER TO SPECIFICATIONS	G D2.1
	5" PLAY AREA RESILIENT SURFACING - TOTTURF - RH21 PURPLE - REFER TO SPECIFICATIONS	F D2.1
	4" PLAY AREA RESILIENT SURFACING - TOTTURF - RH20 STANDARD BLUE - REFER TO SPECIFICATIONS	F D2.1
	4" PLAY AREA RESILIENT SURFACING - TOTTURF - RH50 ORANGE - REFER TO SPECIFICATIONS	F D2.1
	SCORE JOINT DEEP SCORE JOINT EXPANSION JOINT	E D2.1
	DOWEL JOINT	F D2.2

SYM	DESCRIPTION	DTL REF
1	CONCRETE CURB - 6" X 24"	A D2.1
2	CONCRETE CURB AND GUTTER, MATCH WITH EXISTING STREET CURB AND GUTTER	A D2.1
3	CONCRETE EDGE AT LANDSCAPE	D D2.1
4	CONCRETE EDGEBAND - 6" X 8"	I D2.1
5	12" WIDE TALL CURB AT FENCE	E D2.2
6	PLAY EQUIPMENT - LSI - PLAYODYSSEY TOWER - 2962	
7	PLAY EQUIPMENT - GORIC - SOUND COLUMN - SEN0702045	
8	PLAY EQUIPMENT - KOMPAN - BLX4101 - BLOQX1	
9	PLAY EQUIPMENT - KOMPAN - BLX4102 - BLOQX3	
10	PLAY EQUIPMENT - KOMPAN - BLX410501 - BLOQX5	
11	PLAY EQUIPMENT - KOMPAN - MACRO SPACENET - COR21401	
12	PLAY EQUIPMENT - GORIC - FLOATING ROCKS - SEN07010190	
13	PLAY EQUIPMENT - LSI - TOT PLAY - PLAY MOTION	

SYM	DESCRIPTION	DTL REF
14	PLAY EQUIPMENT - GORIC - THE RAINMAKER - SEN07020525	
15	PLAY EQUIPMENT - LSI - CUSTOM TRAIN	
16	PLAY EQUIPMENT - FREENOTES - GIANT WOOD XYLOPHONE	
17	PLAY EQUIPMENT - FREENOTES - CONTRABASS CHIMES	
18	PLAY EQUIPMENT - FREENOTES - TUNED DRUMS	
19	PLAY EQUIPMENT - IDS - BEAR CUB (CFH 47")	
20	PLAY EQUIPMENT AND INSTRUCTIONAL SIGNAGE BY MANUFACTURE WITH RESILIENT SURFACING OVER 24"X10" CONCRETE FOOTING.	
21	SEATWALL / RAISED PLANTER	C D2.1
22	7' SOUND WALL - TO BE INSTALLED AS PER MANUFACTURER'S DETAILS - REFER TO SPECIFICATIONS	
23	NOT USED	
24	ORNAMENTAL IRON GATES	J D2.2
25	GATE CANE BOLT SLEEVE	J D2.2
26	P.C.C. NEW WALKWAY TO EXISTING CONNECTION	B D2.1

SYM	DESCRIPTION	DTL REF
27	6" FLUSH EDGE OF WALK	L D2.1
28	DOWEL JOINT AT EXISTING AND PROPOSED CURB	F D2.2
29	SAW CUT AND PATCH CONCRETE PAVING AFTER INSTALLATION OF WATER LINE, STORM DRAIN AND SANITARY SEWER, MATCH COLOR, TEXTURE AND SCORE JOINTS WITH EXISTING SIDE WALK PAVING	B D2.2
30	ENTRY ARBOR	M D2.2
31	TRASH / RECYCLING RECEPTACLES - REFER TO SPECIFICATIONS	B D2.3
32	BENCHES, TYPICAL - REFER TO SPECIFICATIONS	H D2.3
33	BIKE RACKS - PROVIDED BY CITY - REFER TO SPECIFICATIONS	A D2.3
34	COMPACT PARKING STALL PAINTING	F D2.3
35	PROPOSED ACCESSIBLE PARKING STRIPING	F D2.3
36	TRUNCATED DOMES - REFER TO SPECIFICATIONS	C D2.3
37	RELOCATED ADA SIGNAGE	A D2.2
38	ADA LOGO - TYPICAL	E D2.3
39	WHEEL STOPS - 3'-6" WIDE - TYPICAL	G D2.3

SYM	DESCRIPTION	DTL REF
40	CONCRETE PAVING TO MATCH EXISTING	B D2.2
41	POLE LIGHT - REFER TO ELECTRICAL PLANS	
42	RELOCATED POLE LIGHT - REFER TO ELECTRICAL PLANS	
43	KIOSK WITH PARK AND CITY INFORMATION WITH EMERGENCY INFORMATION - REFER TO SPECIFICATIONS	D D2.3
44	RESTROOM BUILDING - BID ALTERNATE NO.1 - REFER TO RESTROOM BUILDING DRAWINGS AND INSTALLATION PROCEDURES AND GUIDELINES	
45	DRINKING FOUNTAIN, WATER BOTTLE FILLING STATION AND PET STATION - REFER TO SPECIFICATIONS	I D2.3
46	SHADE STRUCTURES - REFER TO SPECIFICATIONS	
47	NOT USED	
48	SONOMA MOSS ROCKS - TYPICAL - REFER TO SPECIFICATIONS	
49	TRAIN TRACK, RAILS - TOTTURF - RH60 DARK GREY TIES - TOTTURF - RH32 BROWN	
50	12" WIDE CURB AT FENCE	K D2.1
51	12" WIDE EDGEBAND AT FENCE	J D2.1
	5' ORNAMENTAL IRON FENCE, MID-FENCE POSTS TO BE EVENLY SPACED BETWEEN END POSTS.	G D2.2
52	FENCE AT CURB STEP	N D2.2
53	ELECTRICAL ENCLOSURE WITH GOOD HOUSEKEEPING PAD, SEE ELECTRICAL DRAWINGS.	

MATERIAL NOTES

1. THE CONTRACTOR SHALL COORDINATE ALL CONSTRUCTION ELEMENTS INCLUDING UTILITY LOCATIONS AND REQUIRED SLEEVING PRIOR TO INSTALLATION. VERIFY CRITICAL DIMENSIONS, REFERENCE POINT LOCATIONS AND CONSTRUCTION CONDITIONS PRIOR TO INITIATING CONSTRUCTION. TEMPORARY BENCHMARKS OR REFERENCE POINTS SHALL BE SET BY THE CONTRACTOR AS NECESSARY. NOTIFY THE OWNER'S REPRESENTATIVE IMMEDIATELY SHOULD DISCREPANCY ARISE AND REDIRECT WORK TO AVOID DELAYS.
2. THE INTERFACE OF ALL PROPOSED IMPROVEMENTS TO EXISTING SITE SHALL CONFORM AND BE SMOOTH AND UNIFORM.
3. ALL REINFORCING AND FORMS SHALL BE SECURED IN PLACE AND ACCEPTED BY OWNER'S REPRESENTATIVE PRIOR TO PLACING ANY CONCRETE.
4. CONCRETE FINISHES SHALL BE AS NOTED. CONTRACTOR SHALL PROVIDE 4'X4' SAMPLES OF ALL SPECIFIED FINISHES OF CONCRETE USING THE SAME MATERIALS THAT WILL BE USED IN THE ACTUAL CONSTRUCTION FOR EACH TYPE SPECIFIED. SAMPLES SHALL BE PREPARED WELL ENOUGH IN ADVANCE OF SCHEDULED CONCRETE POUR TO ALLOW FOR REVIEW AND POSSIBLE RE-POURING OF UNACCEPTABLE SAMPLES. UNACCEPTABLE SAMPLES SHALL BE RE-PREPARED UNTIL ACCEPTED BY THE OWNER'S REPRESENTATIVE. ACCEPTED SAMPLES SHALL BE PROTECTED AND REMAIN ON SITE FOR REFERENCE UNTIL FINAL ACCEPTANCE.
5. ASPHALT SHALL NOT BE INSTALLED UNTIL ALL CONCRETE CURBS AND CONCRETE PAVING IS INSTALLED.
6. FOR SITE SIGNAGE, REFER TO SPECIFICATIONS.
7. ANY (E) UTILITIES TO REMAIN SHALL RECEIVE A NEW UTILITY BOX IF LOCATED WITHIN LIMIT OF WORK.
8. ALL WALLS TO HAVE EXPANSION JOINT AT CONCRETE PAVING EDGES.

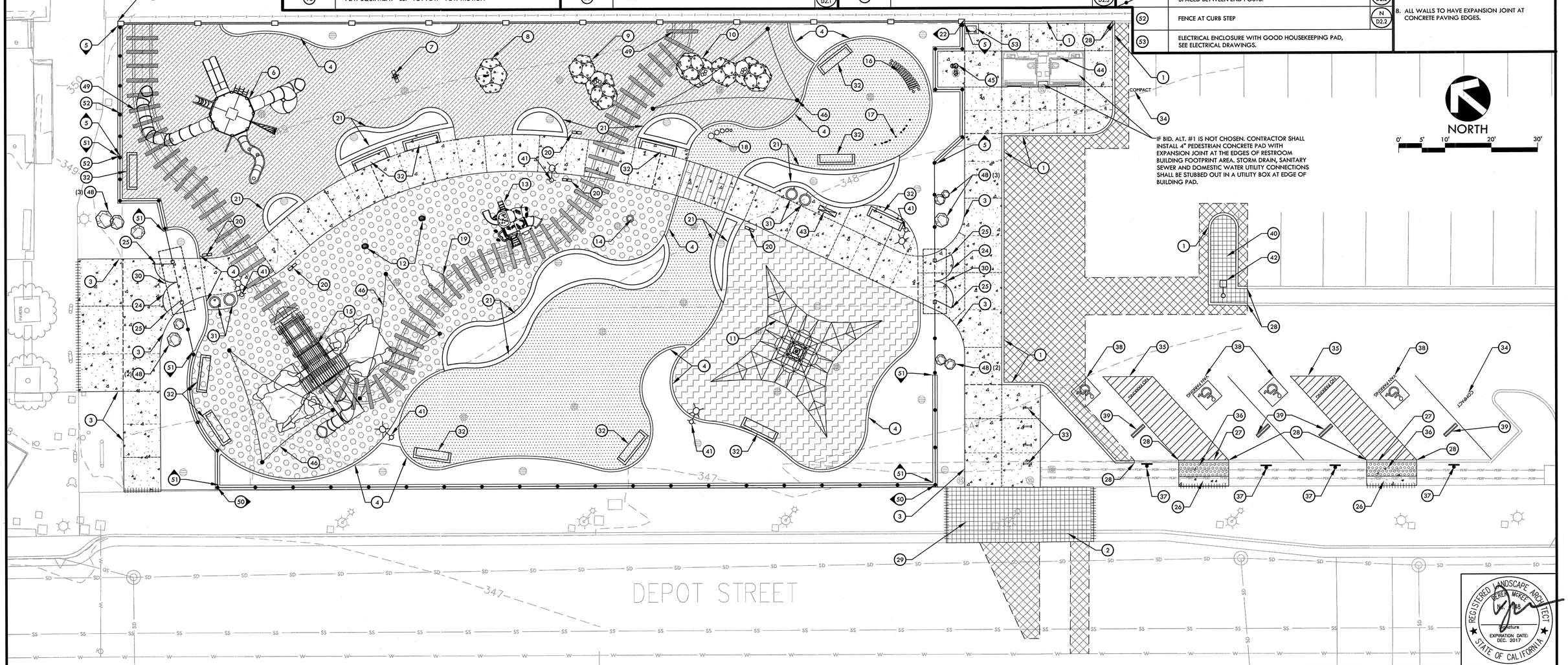

REGISTERED LANDSCAPE ARCHITECT
JEREMY MCKEE
No. 5048
Signature
EXPIRATION DATE: DEC. 2017
STATE OF CALIFORNIA

NO.	DESCRIPTION	DATE	BY

Revisions

WORK ACCEPTED: INSPECTOR:
BY: DATE:

DRAWN: RK / JL DESIGN: CMES
CHECKED: CMES / DM
APPROVED: DATE: 12/15/16
KARL D. BLAKE- CITY ENGINEER
RCE 39416 EXP. 12/31/2017

HOR: N/A
VERT: N/A
JOB NUMBER: 135013

CITY OF MORGAN HILL
City of Morgan Hill
Public Works Department
17575 Peak Ave. Morgan Hill, CA 95037 (408)778-6480, Fax (408)779-7236

VERDE DESIGN
LANDSCAPE ARCHITECTURE
CIVIL ENGINEERING
SPORT PLANNING & DESIGN
2455 The Alameda, Ste. 200
Santa Clara, CA 95050
tel: 408.985.7250
fax: 408.985.7260
www.verdedesigninc.com

DEPOT STREET AND E 4TH STREET, MORGAN HILL, CA 95037

MATERIAL AND DETAIL REFERENCE PLAN
DEPOT PARK

FILE NUMBER: 1520400
PRINT DATE: 12/07/16
SHEET NUMBER: L7.1

BID DRAWINGS

IRRIGATION LEGEND

SYM	DESCRIPTION	MANUFACTURER/MODEL NO./NOTES	GPM	PSI	DTL REF
○	TREE BUBBLER	HUNTER FB-50-PC-BUBBLER NOZZLE 2 PER TREE	.50	30	H D3.2
	REMOTE CONTROL VALVE	HUNTER - ICV - SIZE AS NOTED			I D3.2
⊕	DRIP CONTROL VALVE KIT	ZONE NO. 2: NETAFIM - LVCZS8010075 - LF ZONE NO. 3: NETAFIM - LVCZS8010075 - HF			A,B D3.3
	GATE VALVE	NIBCO - GATE VALVES 2" AND SMALLER SHALL BE NIBCO T-113-LF. FOR VALVES ABOVE 2" IN SIZE UTILIZE NIBCO F-619 FLANGED VALVE WITH SQUARE OPERATING NUT.			C D3.1
♦	QUICK COUPLER VALVE IN LANDSCAPE	HUNTER - HQ-44-LRC QUICK COUPLER VALVE			B D3.1
	LATERAL LINES	3/4" LATERAL LINE - SCHEDULE 40 PVC PIPE WITH SCH. 80 PVC SOLVENT-WELD FITTINGS, AND 18" COVER.			A,E D3.1
	LATERAL LINES	1" LATERAL LINE - SCHEDULE 40 PVC PIPE WITH SCH. 80 PVC SOLVENT-WELD FITTINGS, AND 18" COVER.			A,E D3.1
	LATERAL LINES	1 1/4" LATERAL LINE - SCHEDULE 40 PVC PIPE WITH SCH. 80 PVC SOLVENT-WELD FITTINGS, AND 18" COVER.			A,E D3.1
	MAIN LINE	PROPOSED IRRIGATION MAIN LINE - CLASS 315 PVC PIPE AND SOLVENT WELD FITTINGS AT 24" DEPTH - SIZE AS NOTED			A,E D3.1
	SLEEVE	CLASS 315 PVC. PIPE SIZE TO BE TWICE THE SIZE OF TOTAL PIPE DIAMETERS WITHIN THE SLEEVE, OR AS NOTED, WITH 30" COVER.			E D3.1
DOM	DOMESTIC WATER LINE	TYPE K COPPER PIPE WITH WELD FITTINGS AND 24" COVER IN LANDSCAPE, AND 30" COVER IN PAVED AREAS - SIZE AS NOTED			A,E D3.1
P.O.C.1	POINT OF CONNECTION	TIE 3" DOMESTIC WATER LINE TO EXISTING WATER LINE AS SHOWN.			

SYM	DESCRIPTION	MANUFACTURER/MODEL NO./ NOTES	DTL REF
P.O.C.2	POINT OF CONNECTION	TIE 1 1/4" DOMESTIC WATER LINE TO RESTROOM BUILDING AS SHOWN.	
P.O.C.3	POINT OF CONNECTION	TIE 1" DOMESTIC WATER LINE TO DRINKING FOUNTAIN AS SHOWN.	
	ELECTRICAL CONDUIT	1" SCHEDULE 80 PVC CONDUIT FOR FLOW SENSOR WIRING, WITH 18" COVER AND DETECTION LOCATOR TAPE.	A,E D3.1
	ELECTRICAL CONDUIT	1" SCH. 80 PVC CONDUIT FOR 14 GAUGE WIRING BETWEEN CONTROLLER AND MASTER VALVE WITH 18" COVER, AND DETECTION LOCATOR TAPE.	A,E D3.1
M	WATER METER	(2) 1" DOMESTIC WATER METER INSTALLED BY THE CITY, CONTRACTOR TO FURNISH AND MORTAR THE WATER METER BOX.	F,G D1.2
C	CONTROLLER	HUNTER - IC-600, MOUNTED IN NEW NEMA-3R ENCLOSURE, SEE ELECTRICAL PLANS AND COORDINATE WITH ELECTRICAL CONTRACTOR.	
	BACKFLOW PREVERNTER	WILKINS - 1" 375XL2 BACKFLOW PREVENTER	E,G D3.2
MV	MASTER VALVE	GRISWOLD - 1" - 2160 NORMALLY OPEN MASTER VALVE	B D3.2
F	FLOW SENSOR	CST - FSI - T10 - 001	B D3.2
	DRIP LINE AREAS	ZONE NO. 2: NETAFIM - TLCV26 - 1801 @ 12" O.C. ZONE NO. 3: NETAFIM - TLCV26 - 1810 @ 12" O.C.	F,G,J D3.3

1 / 1" / 13 — CONTROLLER STATION NUMBER; APPROX. GPM FLOW THROUGH VALVE; CONTROL VALVE SIZE

3 / 2,777 SF / 3/4" / 8.05 — PLANTING ZONE NUMBER FOR SUBSURFACE IRRIGATION VALVES; NETAFIM ZONE SQUARE FOOTAGE; APPROX. GPH FLOW THROUGH VALVE; CONTROL VALVE SIZE

IRRIGATION NOTES

1. THIS SYSTEM IS DESIGNED TO OPERATE AT A MAXIMUM FLOW OF (45) GPM WITH A MINIMUM (35) STATIC P.S.I. AT THE POINT OF CONNECTION. CONTRACTOR SHALL VERIFY PRESSURE PRIOR TO BEGINNING WORK. CONTACT OWNER IMMEDIATELY SHOULD DISCREPANCY ARISE AND RE-DIRECT WORK TO AVOID DELAY.
2. CONTRACTOR SHALL COORDINATE ELECTRICAL SUPPLY WITH GENERAL CONTRACTOR. GENERAL CONTRACTOR SHALL STUB APPROPRIATE POWER SUPPLY IN VICINITY OF CONTROLLER LOCATION.
3. IRRIGATION SYSTEM DESIGN IS DIAGRAMMATIC. WHERE PIPING, VALVES, QUICK COUPLERS, ETC. ARE SHOWN OUTSIDE PLANTING AREAS, OR LIMIT OF WORK; INTENT IS FOR PIPING, VALVES, ETC., TO BE INSTALLED WITHIN PLANTING AREAS OF PROPERTY. INDICATE EXACT LOCATIONS OF IRRIGATION EQUIPMENT ON RECORD DRAWINGS. REFER TO SPECIFICATIONS.
4. CONTRACTOR SHALL PROGRAM CONTROLLER TO INSURE PROPER IRRIGATION. BASED ON PLANT TYPE, SUN EXPOSURE, SOIL TYPE, SLOPE AND SEASON.
5. CONTRACTOR SHALL USE EXTREME CARE WHERE IT IS NECESSARY TO TRENCH NEAR EXISTING TREES. EXCAVATION IN AREAS EXHIBITING ROOT 3" AND LARGER SHALL BE DONE BY HAND. ROOTS 2" OR LARGER IN DIAMETER DAMAGED IN CONSTRUCTION SHALL BE CLEANLY CUT.
6. CONTRACTOR SHALL REFER TO DETAILS AND SPECIFICATIONS FOR ADDITIONAL INFORMATION.

NORTH

0' 5' 10' 20' 30'

REGISTERED LANDSCAPE ARCHITECT
JEREMY MORRIS
No. 4148
Signature
EXPIRATION DATE: DEC. 2017
STATE OF CALIFORNIA

NO.	DESCRIPTION	DATE	BY

Revisions

WORK ACCEPTED: INSPECTOR:
BY: DATE:

DRAWN: RK / JL
DESIGN: CMES
CHECKED: CMES / DM
APPROVED: KARL D. BLADE - CITY ENGINEER RCE 39416 EXP. 12/31/2017
DATE: 12/15/16
HOR: N/A
VERT: N/A
JOB NUMBER: 135013

CITY OF MORGAN HILL
City of Morgan Hill
Public Works Department
17575 Peak Ave. Morgan Hill, CA 95037 (408)778-6480, Fax (408)779-7236

VERDE DESIGN
LANDSCAPE ARCHITECTURE
CIVIL ENGINEERING
SPORT PLANNING & DESIGN
2455 The Alameda, Ste. 200
Santa Clara, CA 95050
tel. 408.985.7200
fax: 408.985.7260
www.verdedesigninc.com

DEPOT STREET AND E 4TH STREET, MORGAN HILL, CA 95037

IRRIGATION PLAN
DEPOT PARK

FILE NUMBER: 1520400
PRINT DATE: 12/07/16
SHEET NUMBER: L8.1

BID DRAWINGS

PLANTING LEGEND

SYM	QTY	SIZE	BOTANICAL/COMMON NAME	WUCOLS PF*	SPACING/ COMMENTS	DTL REF
TREES						
LI	11	24" BOX	LAGERSTROEMIA INDICA 'TUSCARORA' TUSCARORA CRAPE MYRTLE	M	AS SHOWN	H D3.2
PA	7	24" BOX	PLATANUS ACERIFOLIA 'YARWOOD' LONDON PLANE TREE	M	AS SHOWN	H D3.2
PC	7	24" BOX	PYRUS CALLERYANA 'BRADFORD' BRADFORD PEAR	M	AS SHOWN	H D3.2
SHRUBS/ GROUNDCOVER						
AC	46	1 GAL.	AEONIUM CANARIENSE GIANT VELVET ROSE	L	1'-0" O.C.	A/F D3.2
LC	105	1 GAL.	LOROPETALUM CHINENSE RUBRUM 'DARUMA COMPACT' DARUMA COMPACT CHINESE FRINGE FLOWER	L	3'-6" O.C.	A/F D3.2
MR	43	1 GAL.	MUHLENBERGIA RIGEN DEER GRASS	L	3'-0" O.C.	A/F D3.2
MC	74	1 GAL.	MUHLENBERGIA CAPILLARIS PINK MUHLY	L	3'-0" O.C.	A/F D3.2
PB	23	1 GAL.	PHORMIUM TENAX 'BRONZE BABY' NEW ZEALAND FLAX	L	4'-0" O.C.	A/F D3.2
PT	133	1 GAL.	PHORMIUM 'TINY TIGER' DWARF VARIEGATED NEW ZEALAND FLAX	L	2'-0" O.C.	A/F D3.2
	78	4" POT	SEDUM ANGELINA STONECROP	L	1'-6" O.C.	A/F D3.2
	126	4" POT	SEDUM SPURIUM 'DRAGON'S BLOOD' CAUCASIAN STONECROP	L	1'-6" O.C.	A/F D3.2
SHRUBS/ GROUNDCOVER						
	172	4" POT	SENECIO MANDRALISCAE BLUE CHALKSTICKS	L	1'-6" O.C.	A/F D3.2
MISCELLANEOUS						
			ROOT BARRIER - REFER TO SPECIFICATIONS			C D2.1 / C D3.2

NOTES:
* PLANT FACTORS ARE BASED ON WUCOLS IV PLANT LIST.

PLANTING NOTES

1. CONTRACTOR SHALL PROTECT AND MAINTAIN ALL PLANT MATERIALS FROM TIME OF DELIVERY TO TIME OF FINAL ACCEPTANCE. OWNER SHALL NOT BE RESPONSIBLE FOR LOSSES DUE TO VANDALISM, THEFT OR SEVERE WEATHER.
2. CONTRACTOR SHALL PLACE PLANT MATERIALS SO THEY DO NOT INTERFERE WITH IRRIGATION SYSTEM OR INHIBIT REQUIRED COVERAGE. PLANT LOCATIONS MAY BE ADJUSTED AS LONG AS DESIGN INTENT IS NOT COMPROMISED. CONTRACTOR SHALL SET OUT PLANT MATERIAL AS PER PLAN AND RECEIVE ACCEPTANCE FROM OWNER'S REPRESENTATIVE WITH RESPECT TO PLANT HEALTH AND LOCATION PRIOR TO INSTALLATION. CONTRACTOR SHALL GIVE MINIMUM 2 WORKING DAYS NOTICE FOR OBSERVATION AND SHALL HAVE ALL PLANT MATERIALS IN SPECIFIED LOCATIONS FOR REVIEW AT ONE TIME. CONTRACTOR SHALL REPLACE ANY MATERIAL AS REQUESTED BY OWNER'S REPRESENTATIVE.
3. ALL NON-TURF PLANTING AREAS SHALL RECEIVE A 3" LAYER OF BARK MULCH TOP DRESS (UNLESS NOTED OTHERWISE). REFER TO SPECIFICATIONS.
4. WHEN WORK HAS TO OCCUR UNDER THE DRIPLINE OF EXISTING TREES NOT SCHEDULED FOR REMOVAL, THE CONTRACTOR SHALL USE ALL POSSIBLE CARE TO AVOID INJURY TO THE TREES AND TREE ROOTS. GRADE IN LINES RADIAL TO THE EXISTING TREES RATHER THAN TANGENTIAL. ALL PARTIAL CUTS OR TEARS THROUGH ROOTS TWO INCHES IN DIAMETER AND LARGER SHALL BE CUT CLEAN. TRENCHES ADJACENT TO TREES SHALL BE FILLED WITHIN 24 HOURS AFTER EXCAVATION, BUT WHERE THIS IS NOT POSSIBLE, THE SIDE OF THE TRENCH ADJACENT TO THE TREE, AND ANY EXPOSED ROOTS SHALL BE KEPT SHADED AND MOIST WITH DAMPENED BURLAP OR CANVAS.
5. ALL PLANTERS, AND PLANT PITS TO RECEIVE SOIL AMENDMENTS AND SOIL PREPARATION PER SPECIFICATIONS UNLESS OTHERWISE NOTED.
6. CONTRACTOR SHALL REFER TO DETAILS AND SPECIFICATIONS FOR ADDITIONAL INFORMATION.

NORTH

0' 5' 10' 20' 30'

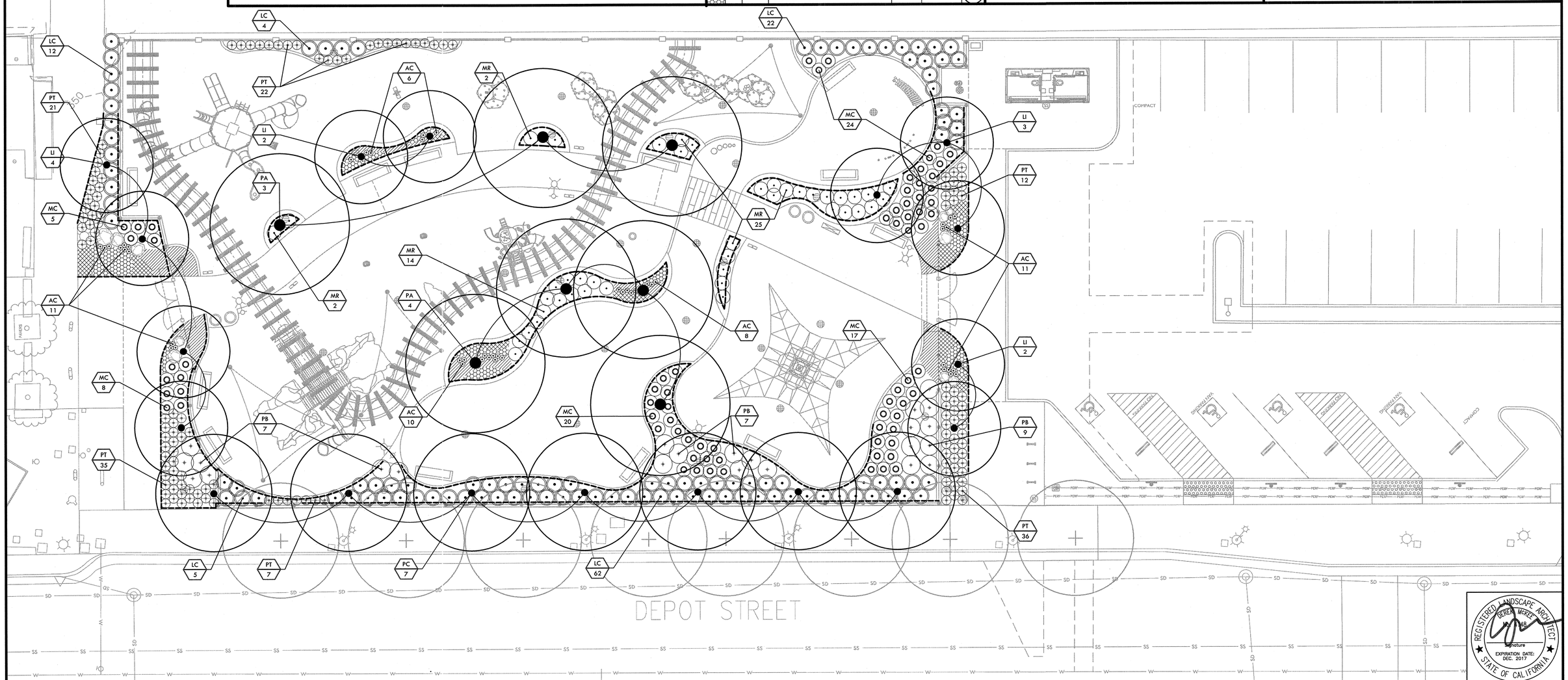

REGISTERED LANDSCAPE ARCHITECT
JEREMY MORGAN
No. 4748
Signature
EXPIRATION DATE: DEC. 2017
STATE OF CALIFORNIA

NO.	DESCRIPTION	DATE	BY

Revisions

WORK ACCEPTED: INSPECTOR:
BY: DATE:

DRAWN: RK / JL
DESIGN: CMES
CHECKED: CMES / DM
APPROVED: K. D. BURGER
DATE: 12/15/16
KARL D. BURGER - CITY ENGINEER
RCE 36416 EXP. 12/31/2017
HOR: N/A
VERT: N/A
JOB NUMBER: 135013

CITY OF MORGAN HILL

City of Morgan Hill
Public Works Department
17575 Peak Ave. Morgan Hill, CA 95037 (408)778-6480, Fax (408)779-7236

VERDE DESIGN

LANDSCAPE ARCHITECTURE
CIVIL ENGINEERING
SPORT PLANNING & DESIGN
2455 The Alameda, Ste. 200
Santa Clara, CA 95050
tel: 408.985.7200
fax: 408.985.7260
www.verdedesigninc.com

DEPOT STREET AND
E 4TH STREET,
MORGAN HILL,
CA 95037

PLANTING PLAN
DEPOT PARK

FILE NUMBER: 1520400
PRINT DATE: 12/07/16
SHEET NUMBER: L9.1

BID DRAWINGS

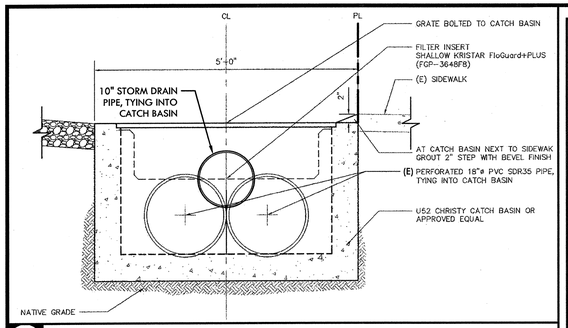

I CATCH BASIN CONNECTION NTS

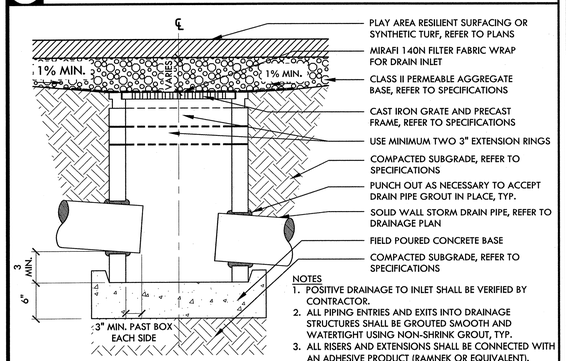

NOTES
1. POSITIVE DRAINAGE TO INLET SHALL BE VERIFIED BY CONTRACTOR.
2. ALL PIPING ENTRIES AND EXITS INTO DRAINAGE STRUCTURES SHALL BE GROUTED SMOOTH AND WATERTIGHT USING NON-SHRINK GROUT, TYP.
3. ALL RISERS AND EXTENSIONS SHALL BE CONNECTED WITH AN ADHESIVE PRODUCT (RAMNEK OR EQUIVALENT).
4. ALL GRATES SHALL BE FITTED WITH LOCK-DOWN MECHANISMS OR BOLT-DOWN COVERS.

H CATCH BASIN NTS

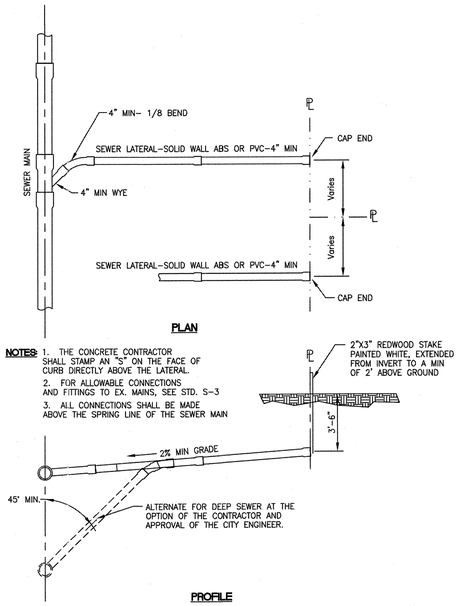

NOTES:
1. THE CONCRETE CONTRACTOR SHALL STAMP AN "S" ON THE FACE OF CURB DIRECTLY ABOVE THE LATERAL.
2. FOR ALLOWABLE CONNECTIONS AND FITTINGS TO EX. MAINS, SEE STD. S-3
3. ALL CONNECTIONS SHALL BE MADE ABOVE THE SPRING LINE OF THE SEWER MAIN

City of Morgan Hill Public Works Department			SEWER LATERAL	DRAWING NO.
CITY ENGINEER	4/1/96 DATE	3/15/07 REVISED		S-2

F SEWER LATERAL

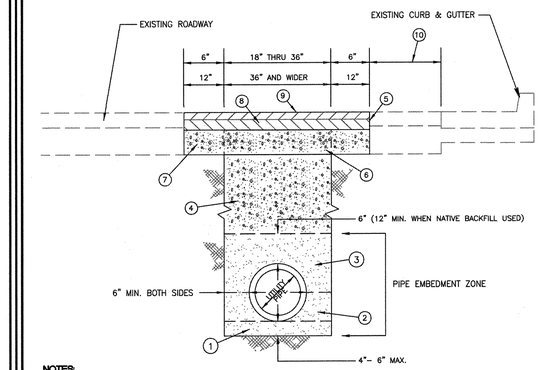

NOTES:
A. PIPE EMBEDMENT SHALL CONFORM TO THE PRACTICE RECOMMENDED FOR CLASS III MATERIAL (SAND) IN ASTM D 2321 "UNDERGROUND INSTALLATION OF THERMOPLASTIC PIPE FOR SEWERS AND OTHER GRAVITY-FLOW APPLICATIONS".
1. SAND BEDDING, HAND PLACED AND COMPACTED TO MIN. 90% RELATIVE COMPACTION, 4" MIN. TO 6" MAX.
2. HAUNCHING; HAND PLACED AND COMPACTED SAND TO MIN. 90% RELATIVE COMPACTION TO SPRING LINE OF PIPE.
3. INITIAL SAND BACKFILL, INSTALL AND COMPACT TO A MINIMUM OF 6" ABOVE PIPE CROWN (12" MIN. FOR NATIVE).
4. 100% CLASS 2 AGGREGATE BASE ROCK BACKFILL COMPACTED IN LIFTS TO 95% RELATIVE COMPACTION. FLOODING OR JETTING SHALL ONLY BE ALLOWED UPON CITY ENGINEER APPROVAL. NATIVE BACKFILL MAY BE USED DURING THE CONSTRUCTION OF NEW STREETS ONLY AND SHALL BE USED ONLY UPON APPROVAL OF THE CITY ENGINEER AND UPON THE RECOMMENDATION OF A QUALIFIED SOILS ENGINEER/SOILS REPORT.
5. SAW CUT EXISTING PAVEMENT, ALL VERTICAL EDGES SHALL BE TACKED PRIOR TO PAVING.
6. 8" (MIN) CLASS 2 AGGREGATE BASE ROCK, COMPACTED TO 95% RELATIVE COMPACTION.
7. AT THE DISCRETION OF THE PROJECT INSPECTOR, THE EXISTING BASE ROCK MAY REMAIN FOR THIS TRENCH WIDTH PROVIDED THAT THE BASE ROCK IS COMPACTED AND IS NOT CONTAMINATED.
8. MATCH EXIST. AC SECTION OR 6" MIN. IN 2 LIFTS. BASE COURSE TO BE 3/4" TYPE B AC, AND SURFACE COURSE TO BE 1/2" TYPE B AC.
9. SURFACE SHALL BE FOG SEALED AFTER PAVING. EXISTING ROADWAY SURFACE SHALL BE REPLACED IN KIND.
10. IF DISTANCE IS LESS THAN 3 FEET, PAVEMENT RESTORATION SHALL EXTEND TO LIP OF GUTTER.

City of Morgan Hill Public Works Department			TRENCH RESTORATION/BACKFILL FOR TRENCH WIDTHS GREATER THAN 18"	DRAWING NO.
CITY ENGINEER	4/1/96 DATE	3/15/07 REVISED		U-3

D TRENCH RESTORATION/BACKFILL (W. GREATER THAN 18")

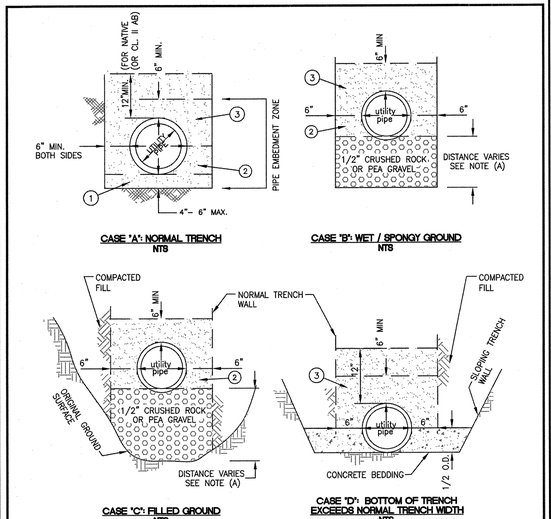

NOTES:
(A) DISTANCE WILL VARY BASED UPON FIELD CONDITIONS, AND SOILS REPORT RECOMMENDATIONS.
(B) PIPE EMBEDMENT SHALL CONFORM TO THE PRACTICE RECOMMENDED FOR CLASS III MATERIAL (SAND) IN ASTM D 2321 "UNDERGROUND INSTALLATION OF THERMOPLASTIC PIPE FOR SEWERS AND OTHER GRAVITY-FLOW APPLICATIONS".
1. SAND BEDDING, HAND PLACED AND COMPACTED TO MIN. 90% RELATIVE COMPACTION, 4" MIN. TO 6" MAX.
2. HAUNCHING; HAND PLACED AND COMPACTED TO MIN. 90% RELATIVE COMPACTION TO SPRING LINE OF PIPE.
3. INITIAL BACKFILL, INSTALL AND COMPACT TO A MINIMUM OF 6" ABOVE PIPE CROWN (12" MIN. FOR NATIVE).

City of Morgan Hill Public Works Department			TRENCH BEDDING	DRAWING NO.
CITY ENGINEER	4/1/96 DATE	REVISED		U-1

B TRENCH BEDDING

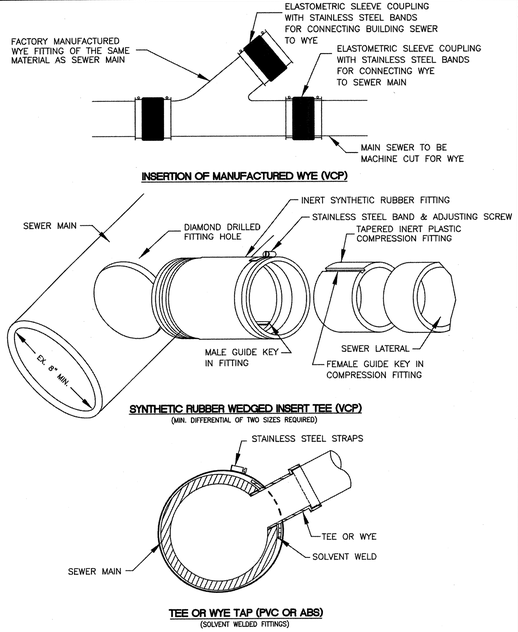

City of Morgan Hill Public Works Department			SEWER LATERAL CONNECTION OPTIONS	DRAWING NO.
CITY ENGINEER	4/1/96 DATE	REVISED		S-3

G SEWER LATERAL CONNECTIONS

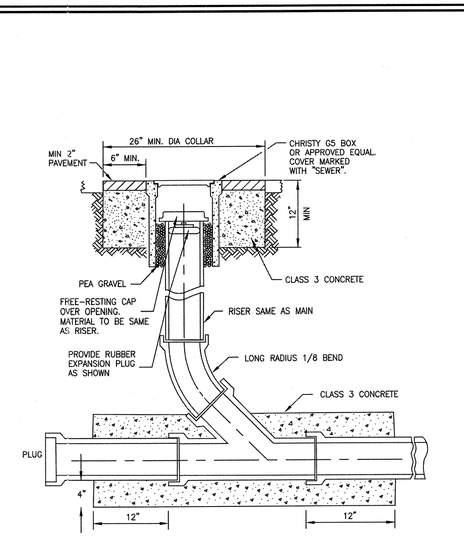

City of Morgan Hill Public Works Department			SEWER CLEANOUT	DRAWING NO.
CITY ENGINEER	4/1/96 DATE	3/15/07 REVISED		S-1

E SEWER CLEANOUT

NOTES:
A. PIPE EMBEDMENT SHALL CONFORM TO THE PRACTICE RECOMMENDED FOR CLASS III MATERIAL (SAND) IN ASTM D 2321 "UNDERGROUND INSTALLATION OF THERMOPLASTIC PIPE FOR SEWERS AND OTHER GRAVITY-FLOW APPLICATIONS".
1. SAND BEDDING, HAND PLACED AND COMPACTED TO 90% RELATIVE COMPACTION, 4" MIN. TO 6" MAX.
2. HAUNCHING, HAND PLACED AND COMPACTED TO 90% RELATIVE COMPACTION TO SPRING LINE OF PIPE.
3. INITIAL BACKFILL, INSTALL AND COMPACT TO A MINIMUM OF 6" ABOVE PIPE CROWN.
4. 1.5 SACK CEMENT SLURRY BACK FILL. CEMENT SLURRY BACKFILL TO BE CURED PER MANUFACTURERS REQUIREMENTS PRIOR TO PAVING.
5. SAW CUT EXISTING PAVEMENT, ALL VERTICAL EDGES SHALL BE TACKED PRIOR TO PAVING.
6. 1 1/2" AC (1/2" TYPE B).
7. SURFACE SHALL BE FOG SEALED AFTER PAVING. EXISTING ROADWAY SURFACE SHALL BE REPLACED IN KIND (OIL & SCREENED, SLURRY SEAL, ETC.)
8. IF DISTANCE IS LESS THAN 3 FEET, PAVEMENT RESTORATION SHALL EXTEND TO LIP OF GUTTER.

City of Morgan Hill Public Works Department			TRENCH RESTORATION/BACKFILL FOR TRENCH WIDTHS LESS THAN 18"	DRAWING NO.
CITY ENGINEER	4/1/96 DATE	3/15/07 REVISED		U-2

C TRENCH RESTORATION/BACKFILL (W. LESS THAN 18")

MANHOLES

Manhole bases shall be cast in place. Precast bases may be used if approved by the City Engineer. Manholes shall be waterproofed by grouting and/or painting the interior with sodium silicate or other approved waterproofing.

INLETS

Unreinforced inlets shall be cast in place with class "A" concrete. Pre-cast inlet structures may be used subject to approval of the City Engineer. All fabricated steel shall be hot dipped galvanized after fabrication.

WORK IN DRAINAGE DISTRICT RIGHT OF WAY

All rip-rap structures, cut off walls, out fall structures, inlet structures, etc., shall be done in accordance with all applicable standards of the Santa Clara Valley Water District (SCVWD). An encroachment permit must be obtained from SCVWD prior to commencement of any work.

Contractor must provide a Letter of Acceptance, or a copy of a signed-off encroachment permit from SCVWD prior to the acceptance of the entire project.

Permits from other state and local agencies may be required.

City of Morgan Hill Public Works Department			GENERAL NOTES	DRAWING NO.
CITY ENGINEER	4/1/96 DATE	REVISED		SD-II

A STORM DRAIN SECTION GENERAL NOTES

REGISTERED LANDSCAPE ARCHITECT — DEREK MOREY — No. 4798 — Signature — EXPIRATION DATE: DEC. 2017 — STATE OF CALIFORNIA

NO.	DESCRIPTION	DATE	BY

Revisions

WORK ACCEPTED: INSPECTOR: BY: DATE:

DRAWN: RK / JL DESIGN: CMES HOR: N/A
CHECKED: CMES / DM VERT: N/A
APPROVED: DATE: 12/15/16 JOB NUMBER: 135013
KARL D. BURKE - CITY ENGINEER RCE 39416 EXP. 12/31/2017

CITY OF MORGAN HILL

City of Morgan Hill
Public Works Department
17575 Peak Ave. Morgan Hill, CA 95037 (408)778-6480, Fax (408)779-7236

VERDE DESIGN
LANDSCAPE ARCHITECTURE CIVIL ENGINEERING SPORT PLANNING & DESIGN
2455 The Alameda, Ste. 200 Santa Clara, CA 95050 tel: 408.985.7200 fax: 408.985.7260 www.verdedesigninc.com

DEPOT STREET AND E 4TH STREET, MORGAN HILL, CA 95037

DRAINAGE DETAILS
DEPOT PARK

FILE NUMBER: 1520400
PRINT DATE: 12/07/16
SHEET NUMBER: D1.1

BID DRAWINGS

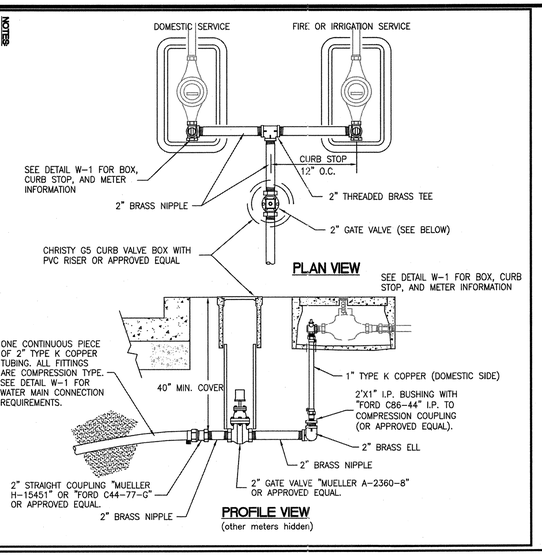

NOTES:

1. STANDARD DETAIL W-1, "RESIDENTIAL WATER SERVICE" IS A PART OF THIS DETAIL EXCEPT AS MODIFIED HEREIN.
2. THIS WATER SERVICE CONFIGURATION IS INTENDED FOR NEW CONSTRUCTION. MANIFOLDING AN EXISTING 2" SERVICE CONFIGURATION SHOWN. THE CORPORATION STOP AT THE EXISTING WATER MAIN SHALL BE EXPOSED (IN STREET/ RIGHT OF WAY) AND TURNED OFF TO AVOID SERVICE INTERRUPTIONS. MANIFOLDING OR RETROFITTING EXISTING 1" AND 2" SERVICES IS NOT ALLOWED.
3. 1" MAXIMUM FOR DOMESTIC AND IRRIGATION METERS. 2" MAXIMUM FOR FIRE SERVICES.
4. SEE DETAIL W-3 FOR MANIFOLD CONFIGURATIONS REQUIRING MORE THAN 2 METERS.
5. DOMESTIC/IRRIGATION APPLICATIONS ARE FOR COMERCIAL AND/OR INDUSTRIAL COMINATIONS ONLY. RESIDENTIAL DOMESTIC/IRRIGATION COMBINATIONS ARE PROHIBITED.

City of Morgan Hill
Public Works Department
APPROVED 1/30/00 DATE
3/15/07 REVISED

WATER SERVICE MANIFOLD FOR DOMESTIC/FIRE OR DOMESTIC/IRRIGATION (COMM./INDUST. IRRIG. ONLY)

DRAWING NO. W-2

G WATER SERVICE FOR DOMESTIC/ IRRIGATION

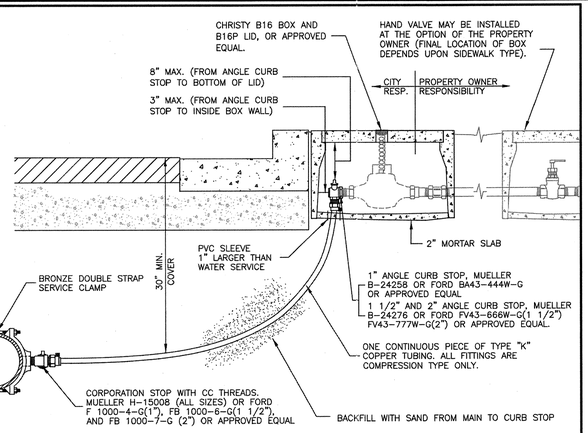

NOTES:

1. FOR 1" WATER METERS USE CHRISTY B-16 UTILITY BOX WITH B-16P LID OR APPROVED EQUAL (AS SHOWN). FOR 1 1/2" AND 2" METERS, USE CHRISTY CHRISTY B-36 UTILITY BOX WITH B-36P LID OR APPROVED EQUAL. FOR METERS LARGER THAN 2", SEE DETAIL W-11.
2. 1" SERVICE SIZE APPLICATION SHOWN. FOR 1 1/2" AND 2" SERVICE LINES USE "ROLL" COPPER. THE USE OF "STICK" COPPER AND REQUIRED FITTING(S) ARE NOT ALLOWED.
3. DETACHED SIDEWALK APPLICATION SHOWN. FOR ATTACHED SIDEWALK, UTILITY BOX SHALL BE MOUNTED DIRECTLY BEHIND BACK OF WALK.

City of Morgan Hill
Public Works Department
CITY ENGINEER 4/1/96 DATE
3/15/07 REVISED

TYPICAL WATER SERVICE INSTALLATION

DRAWING NO. W-1

F TYPICAL WATER SERVICE INSTALLATION

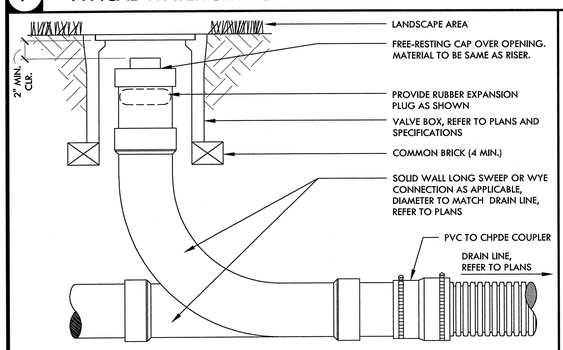

E CLEANOUT IN LANDSCAPE NTS

NOTE: CONTRACTOR TO PROVIDE NECESSARY PIPE REDUCER IF REQUIRED DUE TO STORM LINE SIZES INDICATED ON DRAINAGE PLAN.

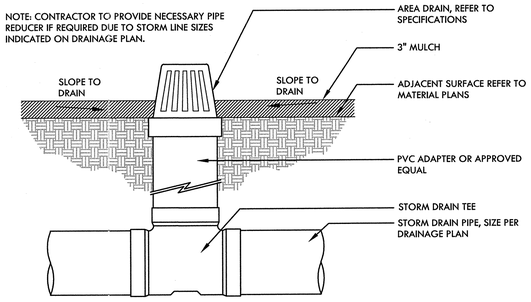

D AREA DRAIN NTS

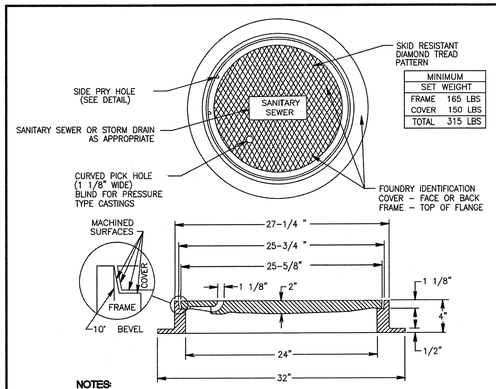

MINIMUM SET WEIGHT	
FRAME	165 LBS
COVER	150 LBS
TOTAL	315 LBS

NOTES:

1. MANHOLE FRAME AND COVER SHALL BE SOUTH BAY FOUNDARY SBF-1254 OR AN APPROVED EQUAL WHICH MEETS MINIMUM SET WEIGHT.
2. CASTING SHALL BE DIPPED IN ASPHALT PAINT.
3. MINIMUM WEIGHT OF SET 315 LBS.
4. CAST IRON SHALL CONFORM TO ASTM A 48 CLASS 35B.
5. WHERE BOLT DOWN COVERS ARE CALLED FOR ON THE PLANS, ADD BOSSES TO FRAME (4 EA. @ 90°), SEE DETAIL.
6. MANUFACTURER SHALL CERTIFY MATERIAL, WEIGHT AND DIMENSIONS.
7. MANUFACTURER TO CERTIFY THAT FRAME AND COVER MEET ALL LOAD REQUIREMENTS FOR H-20 HIGHWAY LOADING.

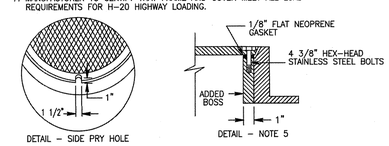

City of Morgan Hill
Public Works Department
CITY ENGINEER 4/1/96 DATE
3/15/07 REVISED

STANDARD MANHOLE FRAME & COVER

DRAWING NO. S-6

C STANDARD MANHOLE FRAME AND COVER

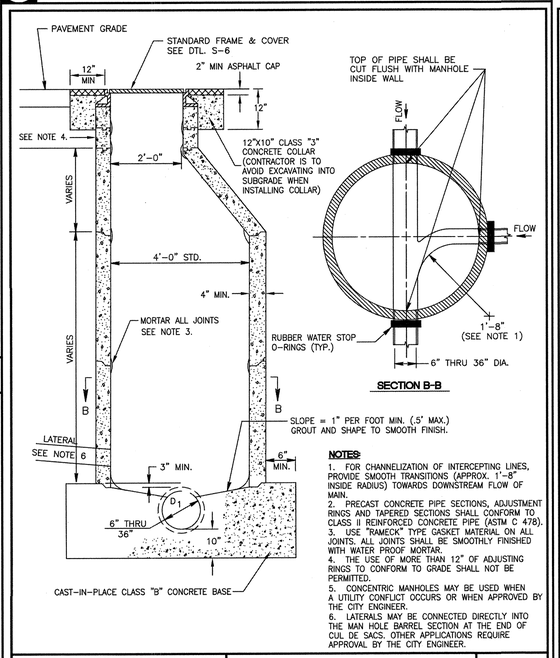

NOTES:

1. FOR CHANNELIZATION OF INTERCEPTING LINES, PROVIDE SMOOTH TRANSITIONS (APPROX. 1'-8" INSIDE RADIUS) TOWARDS DOWNSTREAM FLOW OF MAIN.
2. PRECAST CONCRETE PIPE SECTIONS, ADJUSTMENT RINGS AND TAPERED SECTIONS SHALL CONFORM TO CLASS II REINFORCED CONCRETE PIPE (ASTM C 478).
3. USE "RAMECK" TYPE GASKET MATERIAL ON ALL JOINTS. ALL JOINTS SHALL BE SMOOTHLY FINISHED WITH WATER PROOF MORTAR.
4. THE USE OF MORE THAN 12" OF ADJUSTING RINGS TO CONFORM TO GRADE SHALL NOT BE PERMITTED.
5. CONCENTRIC MANHOLES MAY BE USED WHEN A UTILITY CONFLICT OCCURS OR WHEN APPROVED BY THE CITY ENGINEER.
6. LATERALS MAY BE CONNECTED DIRECTLY INTO THE MAN HOLE BARREL SECTION AT THE END OF CUL DE SACS. OTHER APPLICATIONS REQUIRE APPROVAL BY THE CITY ENGINEER.

City of Morgan Hill
Public Works Department
CITY ENGINEER 4/1/96 DATE
3/15/07 REVISED

SANITARY SEWER MANHOLE PIPE SIZES 6" TO 36"

DRAWING NO. S-4

B SANITARY SEWER MANHOLE 6" TO 36"

TESTING

After backfill and compaction of the base rock, all sewer mains, laterals and manholes shall be required to pass an air or water leakage test. The contractor shall furnish all equipment, labor and materials needed to perform the test. A "Mandrel Test" may also be required by the City Engineer.

AIR TEST

The pneumatic test method or "air test" is the preferred test for leakage detection of new sewer lines. Contractor shall furnish all equipment, labor and materials necessary to perform the test. Length of line tested at one time shall be limited to the length between adjacent manholes.

Air test procedure shall be as follows: Pressurize the test section to 3.5 PSI, disconnect the compressor from the hose and time for not less than 5 minutes. If at the end of the test period the pressure is less than 3.0 PSI, the section of pipe has failed. If the new main is below ground water level, the Uni-Bell UNI-B-6 "Recommended Practice for Low-Pressure Air Testing of Installed Sewer Pipe" shall be used.

AIR TEST ON PRESSURE MAIN

Force mains shall hold air pressure that is 50% higher than the normal operating pressure for a period of 3 minutes with pressure drop not to exceed 0.5 psi.

WATER TEST

In lieu of the air test a water test may be performed upon approval of the inspector. Where grades are slight, two or more sections between manholes may be tested at the same time. Where grades are steep, the maximum head on any one section shall not exceed 12 feet. All lines and branches not under test shall be plugged to prohibit overflow.

A section of sewer line prepared as above shall be tested by filling the manhole with water to a height of four feet above the invert at midpoint of the test section, or one foot above the top of pipe in the upstream manhole, whichever is greater. Water should be introduced into the test section at least 6 hours in advance of the official test period to allow pipe and joint material to become saturated with water.
All entrapped air shall be removed from the test section prior to performing the test. At the beginning of the test, the height of water in the upper manhole shall be carefully measured from a point on the manhole rim. After a period of 2 hours or less, with the approval of the inspector, the water height shall be measured from the same point on the manhole rim and loss of water during the test period calculated. Allowable leakage shall not exceed 4 gallons per hour per 1000 feet of line per inch of pipe diameter.

Sewer sections showing leakage in excess of the maximum shall be repaired or reconstructed as necessary to reduce leakage to the maximum specified above.

The contractor's attention is directed to the fact that the stipulated maximum leakage shall in no way relieve the contractor of his obligation to correct, stop or otherwise remedy individual leaks in the system due to defective workmanship or material even though such leakage might fall within the maximum.

MANDREL TEST

A Mandrel test may be required by the City Engineer. The Mandrel shall be 4% smaller than the inside diameter of the pipe tested.

City of Morgan Hill
Public Works Department
CITY ENGINEER 4/1/96 DATE
REVISED

GENERAL NOTES

DRAWING NO. S-II

SANITARY SEWER

GENERAL

All Sanitary Sewers shall be constructed in accordance with the City of Morgan Hill Standard Details. Materials shall conform to the American Society for Testing and Materials (ASTM), and the American Water Works Association (AWWA), except as modified herein.

SEWER MAINS

Main sewer lines shall be PVC or ABS "composite wall" pipe, PVC solid wall pipe, ABS solid wall pipe, polyurethane lined D.I.P. or PVC C900. Polyurethane D.I.P. (or PVC C900 upon City Engineer approval) shall be used where pipe cover is less than 3 feet but at least 2 feet.

After all testing, backfill and pavement restoration has been completed, the contractor shall flush and clean all sewer lines 24 inches or less in diameter by the "Wayne Ball" method.

TYPES OF SEWER MAIN/LATERALS

POLY-VINYL CHLORIDE (PVC)

Poly-Vinyl Chloride (4" to 12") solid wall pipe, shall conform to ASTM D 3034 (SDR 26) with rubber gasket joints. PVC used for force or shallow mains shall conform to AWWA C900 and installation conform to ASTM D 2774.

ACRYLONITRILE-BUTADIENE-STYRENE (ABS)

Acrylonitrile-Butadiene-Styrene (4" to 12") solid wall pipe, shall conform to ASTM D 2751 (SDR 26).

COMPOSITE WALL PIPE

Double wall, truss type braced, and concrete filled, composite wall pipe, shall conform to ASTM D 2680, SDR 23.5.

DUCTILE IRON PIPE (Polyurethane Lined & Polyethylene Encased)

Polyurethane Lined D.I.P. for force mains or shallow mains, shall be "POLYTHANE Lined Ductile Iron Pipe and Fittings" as manufactured by U.S. Pipe or approved equal. Polyethylene Encasement shall be "GREENSHIELD Polyethylene Film" as manufactured by U.S. Pipe or approved equal, and conform to AWWA C105.

SEWER MAIN/LATERAL INSTALLATION

PVC/ABS solid wall pipe shall be installed per ASTM D2321 using sand as the embedment material. Sand shall conform to CALTRANS Section 19-3.025B.

LATERALS

The underground contractor shall keep an accurate record of all manholes and the distance between them and each wye branch lateral and their direction. Laterals shall be laid on a minimum of 2% grade. The end of the lateral shall be marked as shown in Detail S-2 prior to construction of the curb and gutter. The concrete contractor shall stamp an "S" on the face of curb directly above the lateral.

City of Morgan Hill
Public Works Department
CITY ENGINEER 4/1/96 DATE
REVISED

GENERAL NOTES

DRAWING NO. S-I

A SANITARY SEWER GENERAL NOTES

REGISTERED LANDSCAPE ARCHITECT
DEREK WEBB
No. 4148
Signature
EXPIRATION DATE: DEC. 2017
STATE OF CALIFORNIA

NO.	DESCRIPTION	DATE	BY

Revisions

WORK ACCEPTED: INSPECTOR:
BY: DATE:

DRAWN: RK / JL
DESIGN: CMES
CHECKED: CMES / DM
APPROVED: DATE: 12/15/16
KARL D. BJARKE-- CITY ENGINEER RCE 39416 EXP. 12/31/2017
HOR: N/A
VERT: N/A
JOB NUMBER: 135013

CITY OF MORGAN HILL
City of Morgan Hill
Public Works Department
17575 Peak Ave. Morgan Hill, CA 95037 (408)778-6480, Fax (408)779-7236

VERDE DESIGN
LANDSCAPE ARCHITECTURE CIVIL ENGINEERING SPORT PLANNING & DESIGN
2455 The Alameda, Ste. 200 Santa Clara, CA 95050 tel: 408.985.7200 fax: 408.985.7260 www.verdedesigninc.com

DEPOT STREET AND E 4TH STREET, MORGAN HILL, CA 95037

DRAINAGE DETAILS
DEPOT PARK

FILE NUMBER: 1520400
PRINT DATE: 12/07/16
SHEET NUMBER: D1.2

BID DRAWINGS

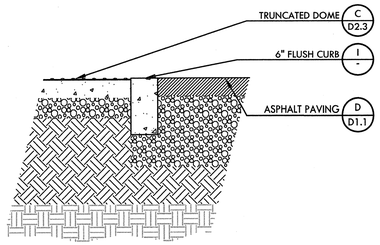

L 6" FLUSH EDGE OF WALK — NTS

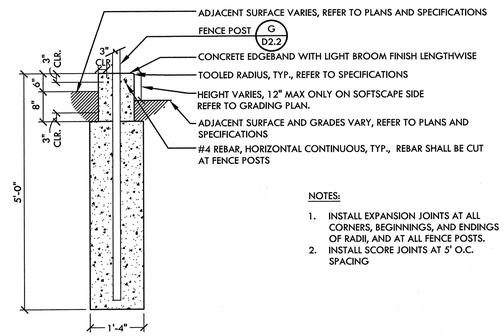

NOTES:

1. INSTALL EXPANSION JOINTS AT ALL CORNERS, BEGINNINGS, AND ENDINGS OF RADII, AND AT ALL FENCE POSTS.
2. INSTALL SCORE JOINTS AT 5' O.C. SPACING

K 12" WIDE CURB AT FENCE — NTS

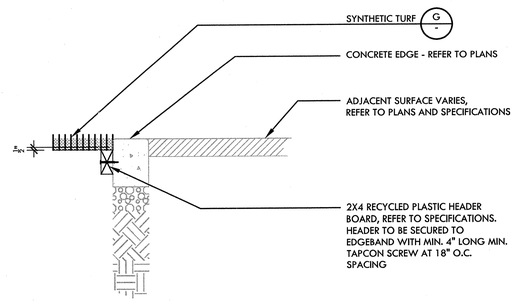

H SYNTHETIC TURF EDGE — NTS

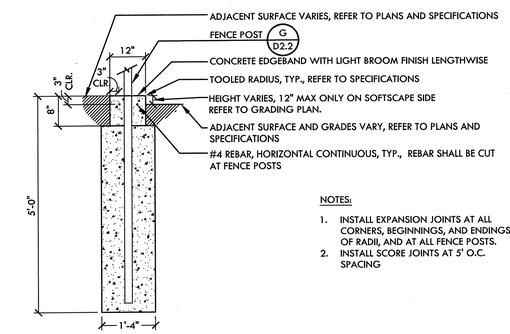

NOTES:

1. INSTALL EXPANSION JOINTS AT ALL CORNERS, BEGINNINGS, AND ENDINGS OF RADII, AND AT ALL FENCE POSTS.
2. INSTALL SCORE JOINTS AT 5' O.C. SPACING

J 12" WIDE EDGEBAND AT FENCE — NTS

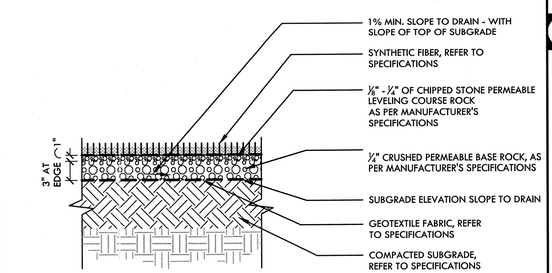

NOTE:

IDENTIFIED FINISH GRADES OF SYNTHETIC TURF SHALL BE THE TOP OF LEVELING COURSE, 1/2" BELOW ADJACENT SURFACES UNLESS EDGE IS A WALL.

G SYNTHETIC TURF — NTS

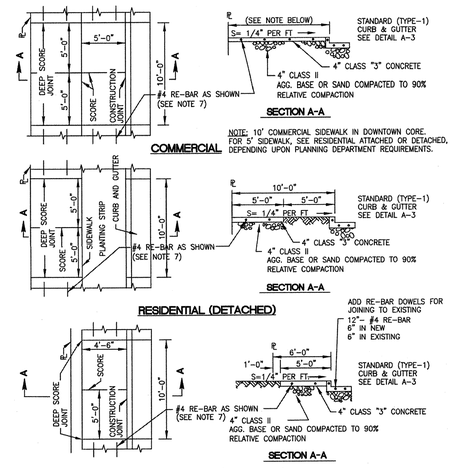

NOTES:

1. CONSTRUCT 3/8" EXPANSION JOINTS WITH FELT FILLER AT RETURNS AND MAJOR STRUCTURES.
2. ROUND ALL EXPOSED EDGES TO 1/2" RADIUS.
3. PLACE EXPANSION JOINTS EVERY 60' (1/2" FELT SEPARATOR).
4. PLACE DEEP SCORE JOINTS EVERY 10'. (1/4" X 1 1/4" MIN)
5. PLACE SCORE MARKS EVERY 5' IN SIDEWALK SECTIONS ONLY. (1/8" X 1/2" MIN.)
6. PLACE AN "S" FOR SEWER LATERAL AND A "W" FOR WATER SERVICE ON FACE OF CURB (NEW DEVELOPMENTS ONLY).
7. FOR NEW SIDEWALK POURED TO ADJOIN EXISTING SIDEWALK, 2-#4 REBARS SHALL BE DOWELLED 6" INTO EXISTING SIDEWALK AND EXTEND 6" INTO NEW SIDEWALK POUR (SEE DIAGRAM ABOVE)..
8. FOR NEW ATTACHED SIDEWALK POURED TO ADJOIN EXISTING CURB, #4 REBARS SHALL BE DOWELLED 6" INTO BACK OF CURB AT EVERY 36" (NOT SHOWN IN DIAGRAM, SEE DETAIL A-3).

City of Morgan Hill Public Works Department			SIDEWALK COMMERCIAL, DETACHED RESIDENTIAL, AND ATTACHED RESIDENTIAL	DRAWING NO.
CITY ENGINEER	4/1/96 DATE	3/15/07 REVISED		A-4

E SIDEWALK COMMERCIAL AND RESIDENTIAL

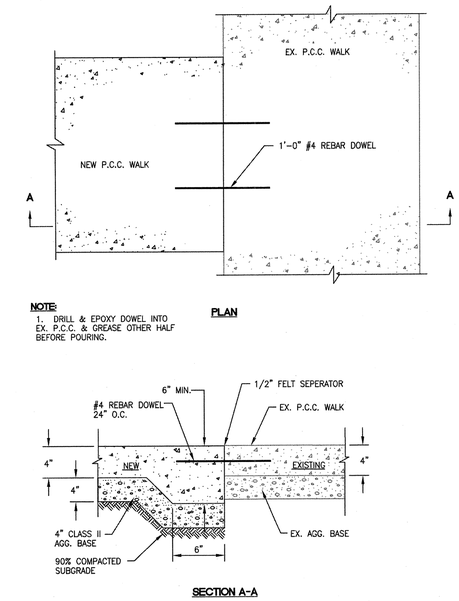

City of Morgan Hill Public Works Department			P.C.C. WALKWAY NEW WALK TO EXISTING CONNECTION	DRAWING NO.
CITY ENGINEER	8/6/98 DATE	REVISED		L-26

B P.C.C. NEW WALKWAY TO EXISTING CONNECTION

D CONCRETE EDGE AT LANDSCAPE — NTS

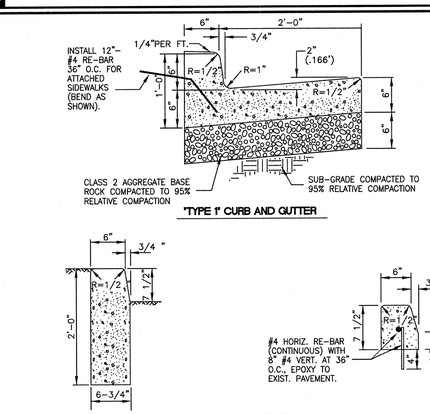

NOTES:

1. A DEEP SCORE JOINT AT EVERY 10' (1/4" X 1 1/4" MIN.) AND A FELT SEPARATOR AT EVERY 60' (1/2") SHALL BE INSTALLED FOR ALL GUTTER TYPES.
2. TYPE 3 (TEMPORARY) EXTRUDED CURB SHALL ONLY BE USED UPON WRITTEN APPROVAL BY THE CITY ENGINEER.

City of Morgan Hill Public Works Department			CONCRETE CURB AND/OR GUTTER TYPES	DRAWING NO.
CITY ENGINEER	4/1/96 DATE	3/15/07 REVISED		A-3

A CONCRETE CURB AND GUTTER

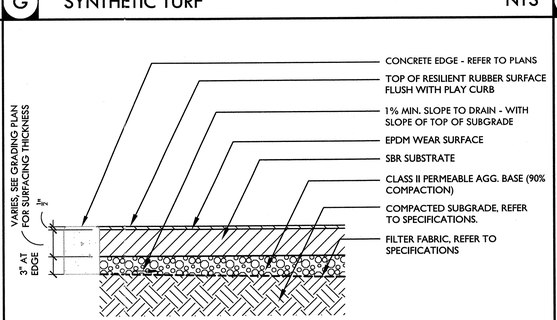

NOTES:

1. TOP OF CONCRETE PLAY CURB AND SUBGRADE SHALL BE COORDINATED TO ENSURE POSITIVE DRAINAGE.
2. DEPTH OF RUBBER SURFACING SHALL BE AS RECOMMENDED BY THE CPSC GUIDELINES AND / OR MANUFACTURER. WHICHEVER IS MORE STRINGENT.

F PLAY AREA RESILIENT SURFACING — NTS

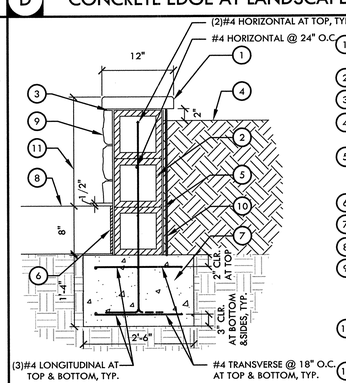

1. SEATWALL CAP - CAP STONE, REFER TO SPECIFICATIONS
2. 8" X 8" X 16" CMU BLOCK
3. MORTOR SETTING AND JOINTS
4. ADJACENT PLANTING AREA- AMENDED SOIL SLOPE TO DRAIN
5. 2 COATS COAL - TAR BASED WATERPROOFING - APPLY TO RETAINING PORTION OF WALL BELOW GRADE
6. EXPANSION JOINT
7. CONCRETE FOOTING
8. ADJACENT PAVING, REFER TO PLANS
9. STONE FACING SHALL BE CULTURED STONE VENEER , REFER TO SPECIFICATIONS SECTION 033300 - CAST-IN-PLACE CONCRETE.
10. ROOT BARRIER AT SEATWALL, 12' WIDE X 2' DEEP, CENTERED ON TRUNK. REFER TO PLANTING PLAN.
11. WALL HEIGHT VARIES, REFER TO GRADING PLAN.

C SEATWALL / RAISED PLANTER — NTS

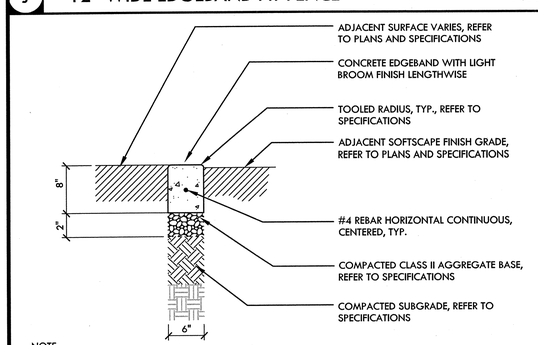

NOTE:

INSTALL SCORE JOINTS AT 10' O.C. SPACING AND ALTERNATING EXPANSION JOINTS EVERY 20' ON STRAIGHT RUNS. ON CURVED RUNS, EXPANSION JOINTS SHALL BE SPACED 10' O.C., WITH ALTERNATIVE SCORE JOINTS AT 5' O.C. SPACING.

I 6" WIDE CONCRETE EDGEBAND - FLUSH — NTS

NO.	DESCRIPTION	DATE	BY

Revisions

WORK ACCEPTED: INSPECTOR:
BY: DATE:

DRAWN: RK / JL	DESIGN: CMES	HOR: N/A	
CHECKED: CMES / DM		VERT: N/A	
APPROVED:	DATE: 12/15/16	JOB NUMBER: 135013	

KARL D. BJARNE - CITY ENGINEER RCE 39418 EXP. 12/31/2017

CITY OF MORGAN HILL

City of Morgan Hill
Public Works Department
17575 Peak Ave. Morgan Hill, CA 95037 (408)778-6480, Fax (408)779-7236

VERDE DESIGN
LANDSCAPE ARCHITECTURE CIVIL ENGINEERING SPORT PLANNING & DESIGN
2455 The Alameda, Ste. 200 Santa Clara, CA 95050 tel: 408.985.7200 fax: 408.985.7290 www.verdedesigninc.com

DEPOT STREET AND E 4TH STREET, MORGAN HILL, CA 95037

CONSTRUCTION DETAILS
DEPOT PARK

REGISTERED LANDSCAPE ARCHITECT — DEBRA MARIE DOLAN — No. 4190 — STATE OF CALIFORNIA
Signature
EXPIRATION DATE: DEC. 2017

FILE NUMBER:	1520400
PRINT DATE:	12/07/16
SHEET NUMBER:	D2.1

BID DRAWINGS

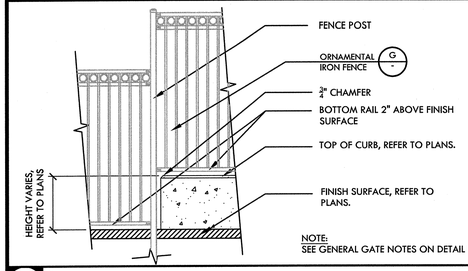

NOTE:
SEE GENERAL GATE NOTES ON DETAIL I, THIS SHEET.

N FENCE AT CURB STEP — NTS

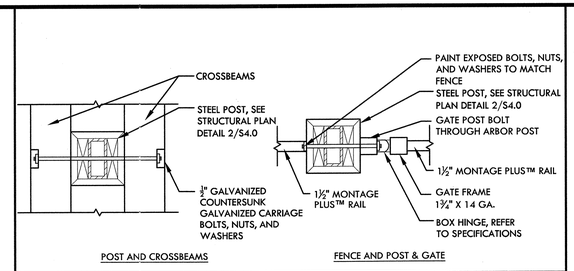

K ARBOR POST CONNECTIONS — NTS

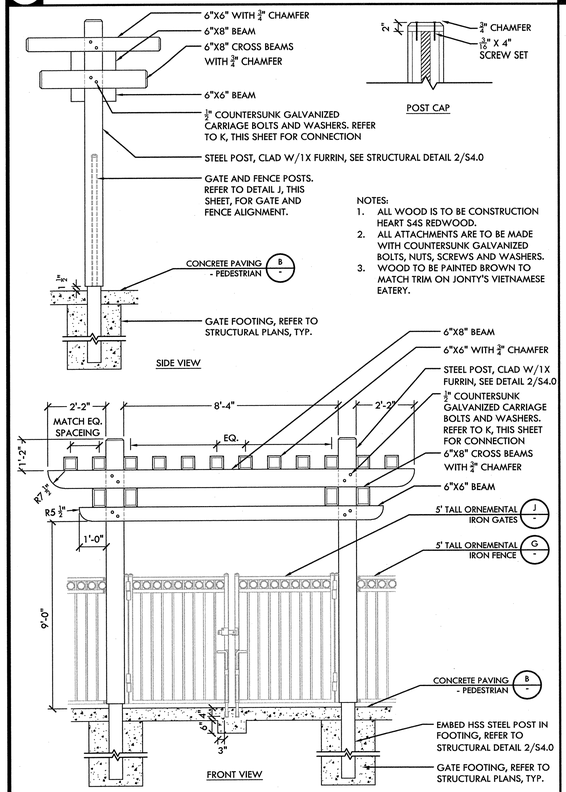

NOTES:
1. ALL WOOD IS TO BE CONSTRUCTION HEART S4S REDWOOD.
2. ALL ATTACHMENTS ARE TO BE MADE WITH COUNTERSUNK GALVANIZED BOLTS, NUTS, SCREWS AND WASHERS.
3. WOOD TO BE PAINTED BROWN TO MATCH TRIM ON JONTY'S VIETNAMESE EATERY.

M ENTRY ARBOR — NTS

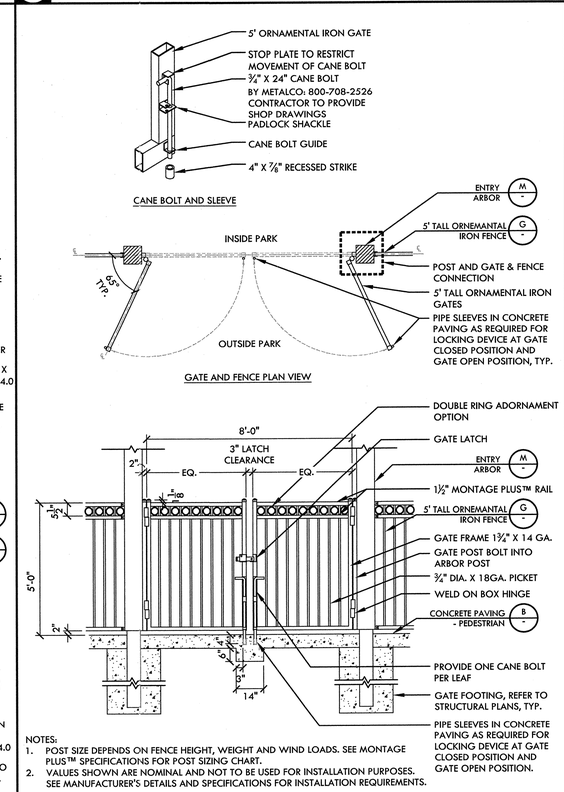

NOTES:
1. POST SIZE DEPENDS ON FENCE HEIGHT, WEIGHT AND WIND LOADS. SEE MONTAGE PLUS™ SPECIFIATIONS FOR POST SIZING CHART.
2. VALUES SHOWN ARE NOMINAL AND NOT TO BE USED FOR INSTALLATION PURPOSES. SEE MANUFACTURER'S DETAILS AND SPECIFICATIONS FOR INSTALLATION REQUIREMENTS.

J 5' TALL ORNAMENTAL IRON GATES — NTS

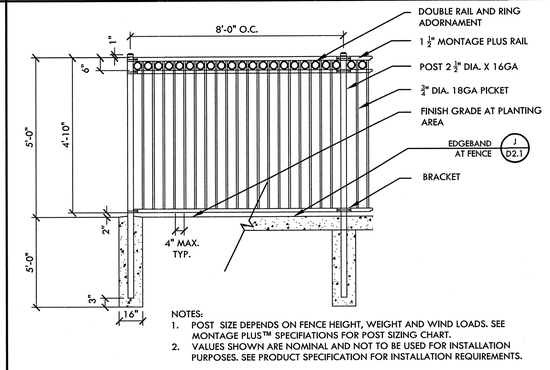

NOTES:
1. POST SIZE DEPENDS ON FENCE HEIGHT, WEIGHT AND WIND LOADS. SEE MONTAGE PLUS™ SPECIFIATIONS FOR POST SIZING CHART.
2. VALUES SHOWN ARE NOMINAL AND NOT TO BE USED FOR INSTALLATION PURPOSES. SEE PRODUCT SPECIFICATION FOR INSTALLATION REQUIREMENTS.

G 5' TALL ORNAMENTAL IRON FENCE — NTS

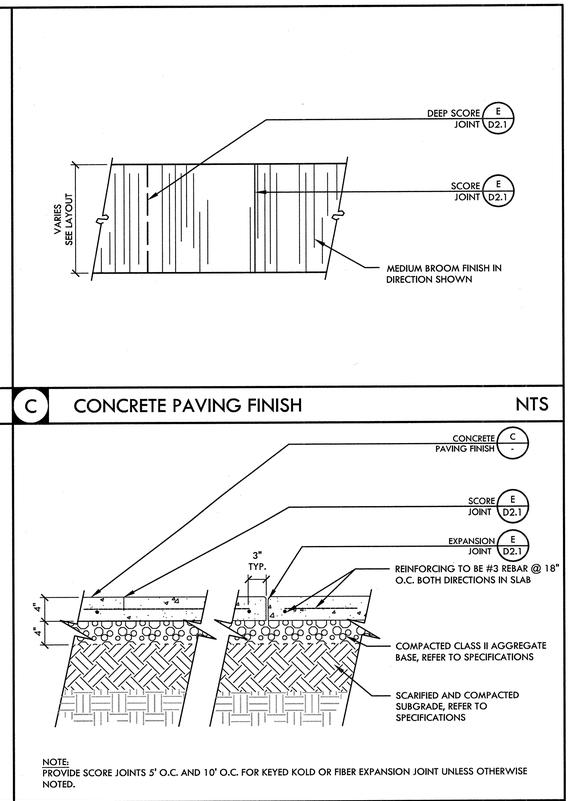

NOTE:
PROVIDE SCORE JOINTS 5' O.C. AND 10' O.C. FOR KEYED KOLD OR FIBER EXPANSION JOINT UNLESS OTHERWISE NOTED.

C CONCRETE PAVING FINISH — NTS

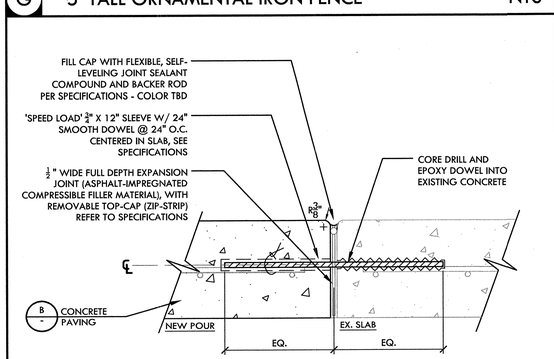

F DOWEL JOINT — NTS

NOTES:
SEE PLANS FOR SIGN LOCATIONS. LOCATIONS SHALL BE APPROVED PRIOR TO INSTALLATION.

A RELOCATED ACCESSIBLE PARKING SIGN — NTS

NOT USED

L

NOTES PERTAIN TO ALL GATE AND FENCE DETAILS:

1. BOTTOM RAIL TO BE 2" FROM FINISH GRADE.
2. SUBMIT SHOP DRAWINGS FOR ACCEPTANCE BY OWNER'S REPRESENTATIVE PRIOR TO INSTALLATION.
3. REFER TO SPECIFICATIONS FOR ALL HARDWARE.
4. GATES IN PATH OF TRAVEL MUST MEET EXIT DOOR REQUIREMENTS.
5. FOR 8 FOOT ENTRY GATE, PROVIDE PIPE SLEEVES IN CONCRETE , FOR LOCKING DEVICE TO SECURE GATE IN CLOSED AND OPEN POSITIONS.
6. ALL PEDESTRIAN SWING GATES SHALL RECEIVE A GATE PADLOCK AND CANE BOLT LATCH-SEE DETAIL.
7. REFER TO PLANS FOR EDGEBAND TYPE UNLESS OTHERWISE NOTED.
8. FOR GATES WITH CANE STOPS, PROVIDE 8" DEEP CONCRETE PAD. CANE STOP TO GO DOWN 4" INTO CONCRETE IN CLOSED AND OPEN POSITIONS.

I ENTRY ORNAMENTAL IRON GATE AND FENCE NOTES — NTS

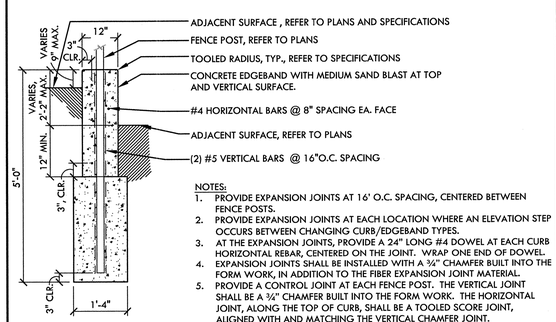

NOTES:
1. PROVIDE EXPANSION JOINTS AT 16' O.C. SPACING, CENTERED BETWEEN FENCE POSTS.
2. PROVIDE EXPANSION JOINTS AT EACH LOCATION WHERE AN ELEVATION STEP OCCURS BETWEEN CHANGING CURB/EDGEBAND TYPES.
3. AT THE EXPANSION JOINTS, PROVIDE A 24" LONG #4 DOWEL AT EACH CURB HORIZONTAL REBAR, CENTERED ON THE JOINT. WRAP ONE END OF DOWEL.
4. EXPANSION JOINTS SHALL BE INSTALLED WITH A 3/4" CHAMFER BUILT INTO THE FORM WORK, IN ADDITION TO THE FIBER EXPANSION JOINT MATERIAL.
5. PROVIDE A CONTROL JOINT AT EACH FENCE POST. THE VERTICAL JOINT SHALL BE A 3/4" CHAMFER BUILT INTO THE FORM WORK. THE HORIZONTAL JOINT, ALONG THE TOP OF CURB, SHALL BE A TOOLED SCORE JOINT, ALIGNED WITH AND MATCHING THE VERTICAL CHAMFER JOINT.
6. ALL EXPANSION JOINTS SHALL BE SEALED.
7. NO SCORE JOINTS ARE REQUIRED ON THESE CURBS, EXCEPT AS INDICATED AT EACH FENCE POST IN ITEM #5 ABOVE.

E 12" WIDE TALL CURB AT FENCE — NTS

B CONCRETE PAVING - PEDESTRIAN — NTS

REGISTERED LANDSCAPE ARCHITECT
DEREK MCKEE
No. 1184
Signature
EXPIRATION DATE: DEC. 2017
STATE OF CALIFORNIA

NO.	DESCRIPTION	DATE	BY

Revisions

WORK ACCEPTED: INSPECTOR:
BY: DATE:

DRAWN: RK / JL
DESIGN: CMES
HOR: N/A
CHECKED: CMES / DM
VERT: N/A
APPROVED: KARL D. BJARKE - CITY ENGINEER RCE 39418 EXP. 12/31/2017
DATE: 12/15/16
JOB NUMBER: 135013

CITY OF MORGAN HILL
City of Morgan Hill
Public Works Department
17575 Peak Ave. Morgan Hill, CA 95037 (408)778-6480, Fax (408)779-7236

VERDE DESIGN
LANDSCAPE ARCHITECTURE CIVIL ENGINEERING SPORT PLANNING & DESIGN
2455 The Alameda, Ste. 200 Santa Clara, CA 95050 tel: 408.985.7200 fax: 408.985.7260 www.verdedesigninc.com

DEPOT STREET AND E 4TH STREET, MORGAN HILL, CA 95037

CONSTRUCTION AND FENCING DETAILS
DEPOT PARK

FILE NUMBER: 1520400
PRINT DATE: 12/07/16
SHEET NUMBER: D2.2

BID DRAWINGS

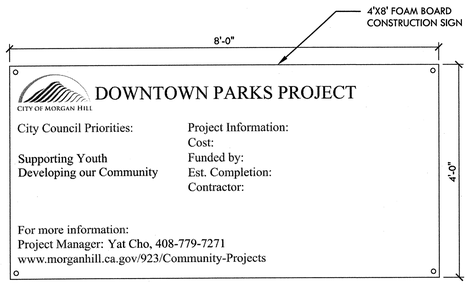

NOTE:
CONSTRUCTION SIGN SHALL BE ATTACHED TO TEMPORARY CONSTRUCTION FENCE WITH WIRE TIES AS ALL (4) CORNERS.

J CONSTRUCTION SIGN NTS

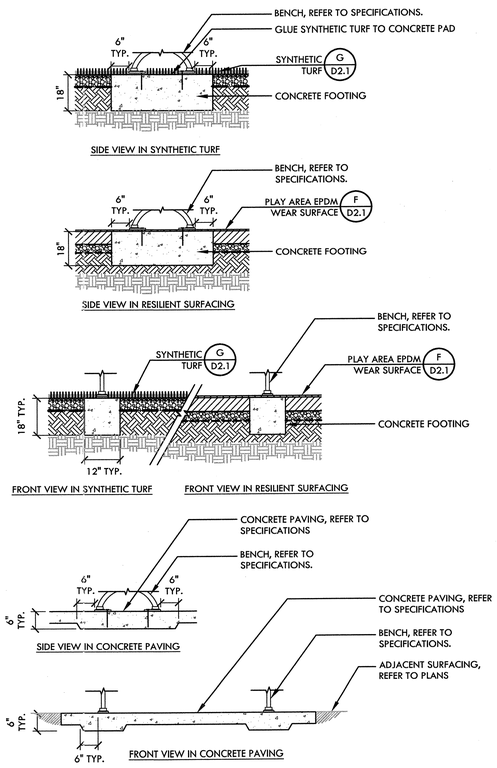

H BENCH NTS

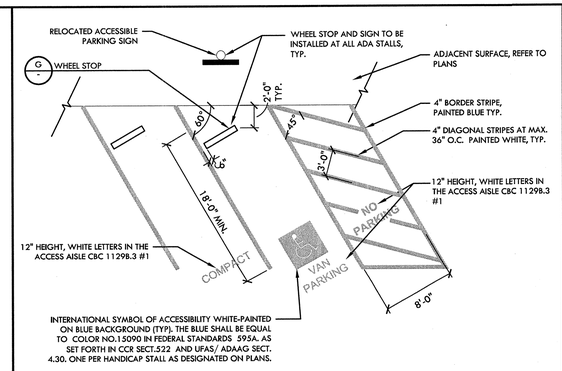

F ACCESSIBLE PARKING STALL NTS

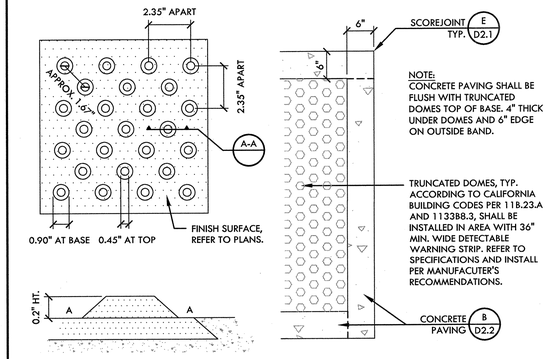

C TRUNCATED DOMES NTS

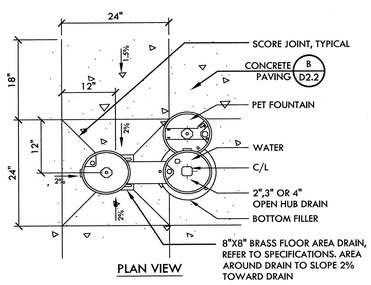

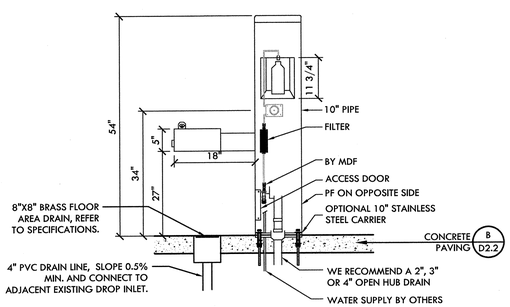

NOTES:
1. OPTIONAL STAINLESS STEEL SURFACE CARRIER RECOMMENDED.
2. INSTALLATION TO BE COMPLETED IN ACCORDANCE WITH MANUFACTURER'S SPECIFICATIONS.
3. DO NOT SCALE DRAWING.
4. ALL INFORMATION CONTAINED HEREIN WAS CURRENT AT THE TIME OF DEVELOPMENT BUT MUST BE REVIEWED AND APPROVED BY THE PRODUCT MANUFACTURER TO BE CONSIDERED ACCURATE.
5. CONTRACTOR'S NOTE: FOR PRODUCT AND COMPANY INFORMATION VISIT www.CADdetails.com/info AND ENTER REFERENCE NUMBER 3354-17.7.

I DRINKING FOUNTAIN, WATER BOTTLE FILLING STATION AND PET STATION NTS

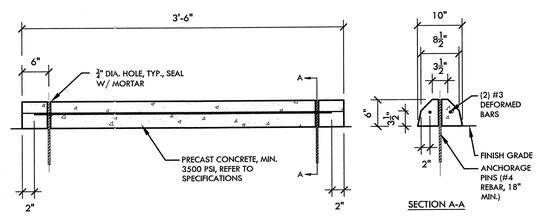

NOTE:
SHOP DRAWINGS REQUIRED FOR REVIEW AND APPROVAL BY OWNER REPRESENTATIVE PRIOR TO FABRICATION.

G WHEEL STOP NTS

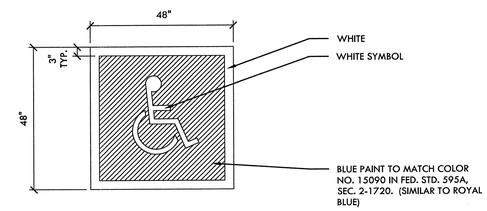

SYMBOL OF ACCESSIBILITY AREA EMBLEM

NOTES:
1. IDENTIFICATION. EACH ACCESSIBLE VIEWING SPACE RESERVED FOR THE DISABLED SHALL BE IDENTIFIED BY A PERMANENTLY AFFIXED REFLECTORIZED SIGN CONSTRUCTED OF PORCELAIN ON STEEL, BEADED TEST, OR EQUAL, DISPLAYING THE INTERNATIONAL SYMBOL OF ACCESSIBILITY. THE SIGN SHALL NOT BE SMALLER THAN 70 SQ. INCHES IN AREA AND SHALL BE CENTERED ON THE BACKSTOP FENCE OR CONNECTED TO BLEACHER FENCE.
2. IN ADDITION TO THE ABOVE REQUIREMENTS, THE SURFACE OF EACH ACCESSIBLE VIEWING SPACE SHALL HAVE A SURFACE IDENTIFICATION DUPLICATING THE SYMBOL OF ACCESSIBILITY IN BLUE PAINT.

E ADA LOGO NTS

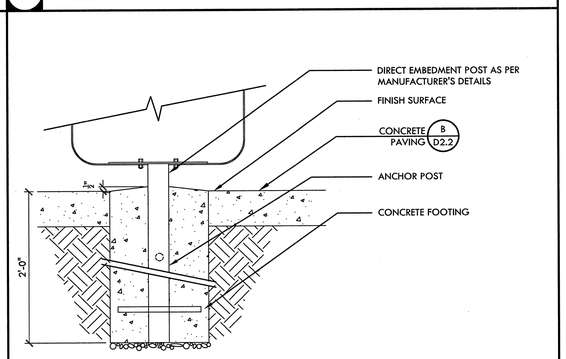

B TRASH AND RECYCLE RECEPTACLES FOOTING NTS

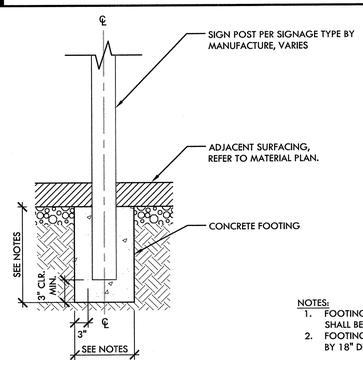

NOTES:
1. FOOTINGS FOR INFORMATION SIGNS SHALL BE 18" DEEP BY 12" DIAMETER.
2. FOOTINGS FOR KIOSK SHALL BE 36" DEEP BY 18" DIAMETER.

D SIGN POST NTS

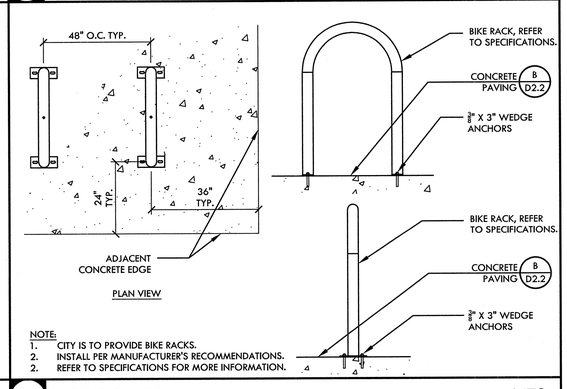

NOTE:
1. CITY IS TO PROVIDE BIKE RACKS.
2. INSTALL PER MANUFACTURER'S RECOMMENDATIONS.
2. REFER TO SPECIFICATIONS FOR MORE INFORMATION.

A BIKE RACK NTS

REGISTERED LANDSCAPE ARCHITECT
DERRICK MCKEE
No. 4948
Signature
EXPIRATION DATE: DEC. 2017
STATE OF CALIFORNIA

NO.	DESCRIPTION	DATE	BY

Revisions

WORK ACCEPTED: INSPECTOR:
BY: DATE:

DRAWN: RK / JL
DESIGN: CMES
HOR: N/A
CHECKED: CMES / DM
VERT: N/A
APPROVED: KARL D. BJARKE, CITY ENGINEER RCE 39416 EXP. 12/31/2017
DATE: 12/15/16
JOB NUMBER: 135013

CITY OF MORGAN HILL
City of Morgan Hill
Public Works Department
17575 Peak Ave. Morgan Hill, CA 95037 (408)778-6480, Fax (408)779-7236

VERDE DESIGN
LANDSCAPE ARCHITECTURE CIVIL ENGINEERING SPORT PLANNING & DESIGN
2455 The Alameda, Ste. 200 Santa Clara, CA 95050 tel: 408.985.7200 fax: 408.980.7260 www.verdedesigninc.com

DEPOT STREET AND E 4TH STREET, MORGAN HILL, CA 95037

SITE FURNISHING DETAILS
DEPOT PARK

FILE NUMBER: 1520400
PRINT DATE: 12/07/16
SHEET NUMBER: D2.3

BID DRAWINGS

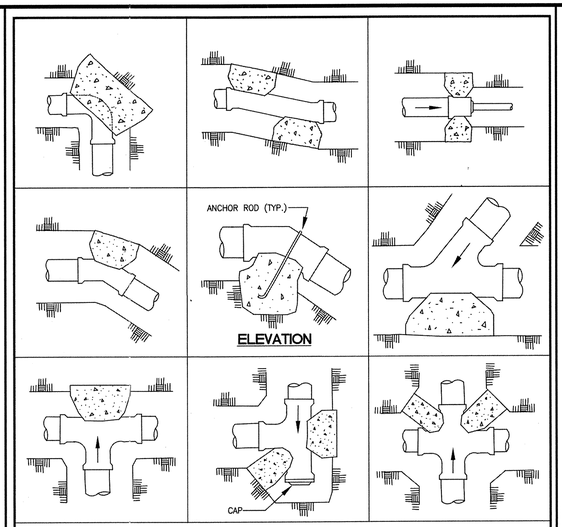

NOTES:

1. ALL PLASTIC PIPE TO BE INSTALLED ACCORDING TO THESE DETAILS UNLESS OTHERWISE NOTED OR DETAILED.
2. THE PORTLAND CEMENT CONCRETE USED FOR THRUST BLOCKS SHALL BE 420-C-2000 CONCRETE.
3. ALL ANCHOR RODS SHALL BE GALVANIZED STEEL, MINIMUM 1/2" DIAMETER, WRAPPED AROUND PIPE.
4. SIZE OF THRUST BLOCKS SHALL BE SPECIFIED ON PLANS.
5. THRUST BLOCKS SHALL BE USED FOR PLASTIC PIPES WITH 3" DIAMETER OR LARGER.
6. FLOW DIRECTION INDICATED BY ⟶
7. ALL VIEWS ARE PLAN VIEW UNLESS OTHERWISE SHOWN.

City of Morgan Hill Public Works Department	THRUST BLOCKS FOR PLASTIC PIPES	DRAWING NO.
Jim Ashcraft 8/6/98 CITY ENGINEER DATE REVISED		L-13

F THRUST BLOCKS FOR PLASTIC PIPES

NOT USED

D

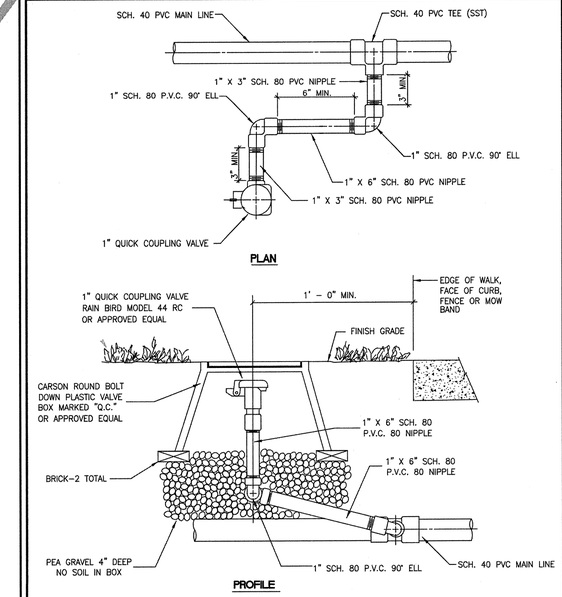

NOTES:

1. ALL PIPING TUBE TO BE 1" OR LARGER.
2. VALVE BOX LID TO HAVE "Q.C." MOLDED INTO TOP OF LID OR BRASS TAG INSTALLED ON LID MARKED "Q.C.".

City of Morgan Hill Public Works Department	1" QUICK COUPLING VALVE	DRAWING NO.
Jim Ashcraft 8/6/98 CITY ENGINEER DATE REVISED		L-7

B 1" QUICK COUPLING VALVE

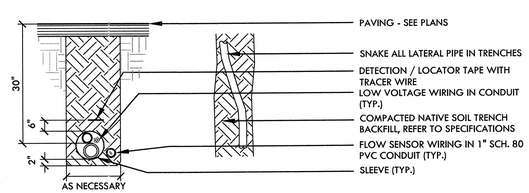

E IRRIGATION PIPE TRENCHING UNDER PAVEMENT NTS.

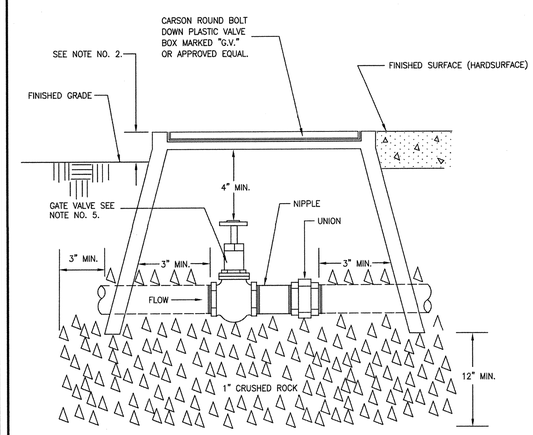

NOTES:

1. AREA AROUND BOX CAN EITHER BE PLANTED, HARDSURFACE OR A COMBINATION.
2. TOP OF BOX:

   1" ABOVE GRADE FOR GROUND COVER OR SHRUBS.
3. CLOSE NIPPLES SHALL NOT BE USED.
4. CRUSHED ROCK SHALL COVER VALVE BOX PIPE OPENINGS TO PREVENT SOIL ENTRY.
5. GATE VALVE SHALL BE "RED & WHITE", OR APPROVED EQUAL.

City of Morgan Hill Public Works Department	GATE VALVE	DRAWING NO.
Jim Ashcraft 8/6/98 CITY ENGINEER DATE REVISED		L-8

C GATE VALVE

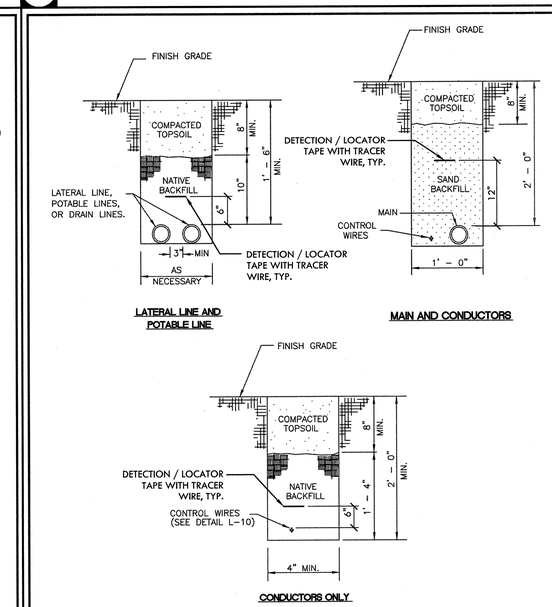

NOTES:

1. TAPE AND BUNDLE WIRING AT 10 FOOT INTERVALS.
2. NATIVE BACKFILL AND TOP SOIL TO BE FREE OF ROCK AND DEBRIS.(3/4" MAX. ROCK SIZE)

City of Morgan Hill Public Works Department	IRRIGATION AND DRAIN LINE TRENCH	DRAWING NO.
Jim Ashcraft 8/6/98 6/8/00 CITY ENGINEER DATE REVISED		L-1

A IRRIGATION AND DRAIN LINE TRENCH

REGISTERED LANDSCAPE ARCHITECT
DEREK MIRES
No. 5148
Signature
EXPIRATION DATE: DEC. 2017
STATE OF CALIFORNIA

NO.	DESCRIPTION	DATE	BY

Revisions

WORK ACCEPTED: INSPECTOR:
BY: DATE:

DRAWN: RK / JL
DESIGN: CMES
CHECKED: CMES / DM
APPROVED: KARL D. BJARNES, CITY ENGINEER RCE 39416 EXP. 12/31/2017
DATE: 12/15/16
HOR: N/A
VERT: N/A
JOB NUMBER: 135013

CITY OF MORGAN HILL

City of Morgan Hill
Public Works Department
17575 Peak Ave. Morgan Hill, CA 95037 (408)778-6480, Fax (408)779-7236

VERDE DESIGN
LANDSCAPE ARCHITECTURE
CIVIL ENGINEERING
SPORT PLANNING & DESIGN
2455 The Alameda, Ste. 200
Santa Clara, CA 95050
tel: 408.985.7200
fax: 408.985.7260
www.verdedesigninc.com

DEPOT STREET AND
E 4TH STREET,
MORGAN HILL,
CA 95037

IRRIGATION AND PLANTING DETAILS
DEPOT PARK

FILE NUMBER: 1520400
PRINT DATE: 12/07/16
SHEET NUMBER: D3.1

BID DRAWINGS

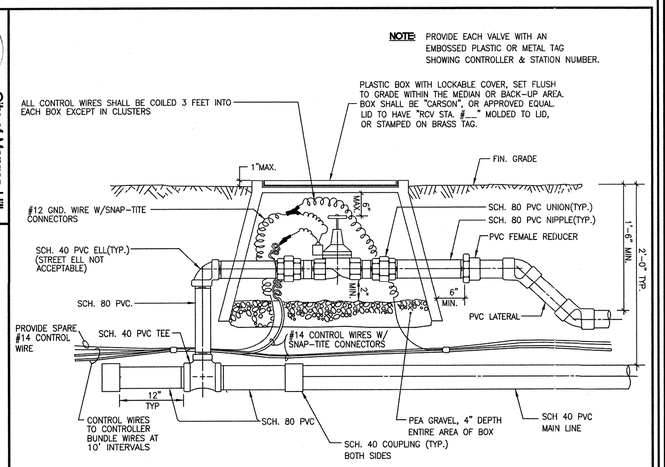

City of Morgan Hill
Public Works Department
CITY ENGINEER 8/6/98 DATE REVISED

REMOTE CONTROL VALVE WITHOUT Q.C. VALVE

DRAWING NO. L-9

I REMOTE CONTROL VALVE

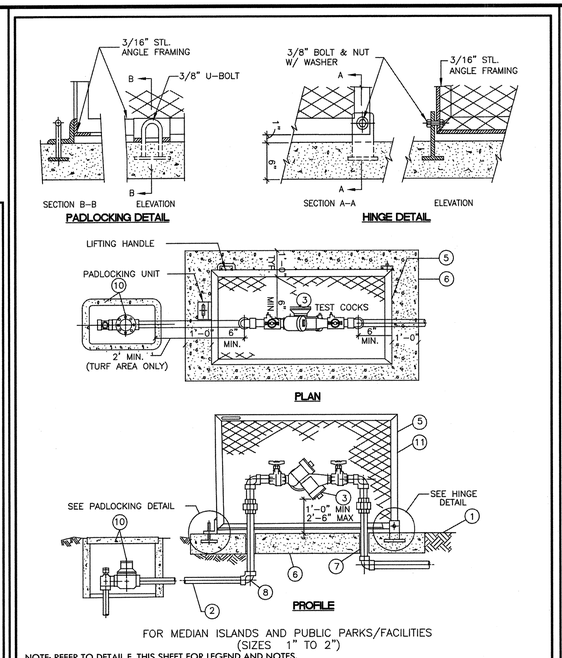

NOTE: REFER TO DETAIL E, THIS SHEET FOR LEGEND AND NOTES.

City of Morgan Hill
Public Works Department
CITY ENGINEER 8/1/97 DATE 3/15/07 REVISED

R.P. BACKFLOW PREVENTER WITH SINGLE-SWING HINGED ENCLOSURE

DRAWING NO. L-10

G R.P. BACKFLOW PREVENTER (SINGLE-SWING)

NOTE: THESE NOTES APPLY TO LANDSCAPING WORK. FOR DOMESTIC, COMMERCIAL/INDUSTRIAL APPLICATIONS, SEE "W"-WATER SECTION.

LEGEND

1. Finish Grade.
2. Service size galvanized steel pipe from water meter. Use Ductile Iron Pipe with flange fittings for sizes 2 1/2" and larger.
3. Reduced Pressure Backflow Preventer FEBCO 825Y (or approved equal) for sizes 3/4" through 2", and FEBCO 825 YD (or approved equal) for sizes 2 1/2" to 4".
4. Adustable pipe saddle support, galvanized steel, suitable for supporting general piping 4" and larger.
5. Backflow preventer enclosure manufactured by Lemeur (or approved equal). Enclosure shall be single-swing type for backflow unit sizes 3/4" through 2" and double-swing type ("clam shell") for backflow unit sizes 2 1/2" through 4". Frame shall be 1 1/2" X 1 1/2" X 3/16" steel angle with 1 1/2" #9 expanded metal. Install as shown on plans.
6. 6" concrete enclosure pad, size as shown on the plan.
7. Service size galvanized steel pipe riser with a minimum of two (2) unions for threaded connections (sizes 1" to 2").
8. 90° elbow, flanged or threaded, wrapped with 10 mil PVC tape.
9. Concrete thrust block for service size 4" or larger (see detail W-12).
10. Water meter and service by others (see detail W-1)
11. Two coats of enamel. Color specified per approved plans.

NOTES:

1. Gate valves and test cocks are required.
2. Water supply- no connections or tees are allowed between the water meter and backflow unit.
3. Protection from freeze damage may be required in exposed areas.
4. Device must be accessible for testing and maintenance. Prior to activation, call 776-7333 for backflow device inspection.
5. Wrap buried galvanized pipe with 3M tape or approved equal.

City of Morgan Hill
Public Works Department
CITY ENGINEER 8/1/97 DATE 3/15/07 REVISED

LANDSCAPE BACKFLOW PREVENTER LEGEND AND NOTES

DRAWING NO. L-12

E BACKFLOW PREVERNTER LEGEND AND NOTES

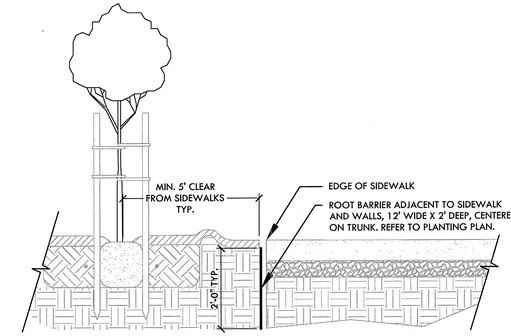

C ROOT BARRIER AT PLANTER WALLS AND PAVING NTS

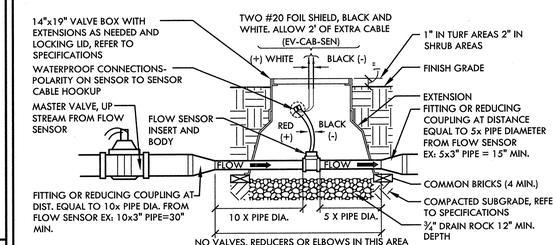

NOTE:
1. FLOW SENSOR MUST BE INSTALLED WITH INSERT (TOP) POSITIONED VERTICALLY AND BODY (TEE) POSITIONED HORIZONTALLY.
2. FLOW SENSOR CABLE MUST BE RUN ALONE IN 1" SCHEDULE 80 PVC CONDUIT FROM FLOW SENSOR TO CONTROLLER ENCLOSURE.
3. FLOW SENSOR TO HAVE 3" MIN. CLEARANCE FROM LID BOTTOM TO TOP OF FLOW SENSOR.
4. LASCO REDUCING COUPLINGS ARE AVAILABLE IN THE FOLLOWING SIZES AND PART NUMBERS:
   429-585 8"x 6"
   429-532 6"x 4"
   429-422 4"x 3"
   429-338 3"x 2"
   429-251 2"x 1 1/2"
   429-212 1 1/2"x 1 1/4"
   429-168 1 1/4"x 1"

B MASTER VALVE AND FLOW SENSOR NTS

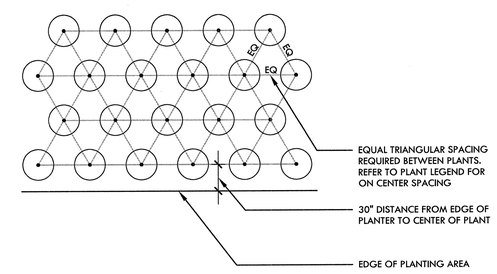

A TRIANGULAR SPACING DIAGRAM NTS

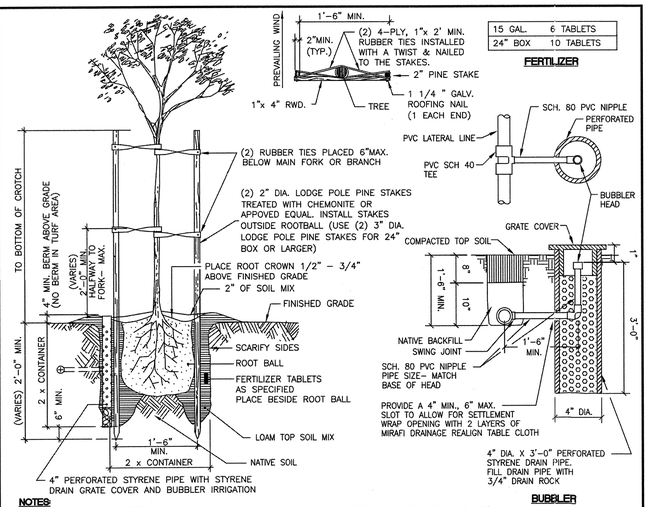

NOTES:
1. USE 2 PIPES IN CONCRETE CUT-OUT AREAS. PUT PIPE ON UPHILL SIDE OF TREE, LEVEL SITE NORTH OF TREE
2. INSTALL LINEAR ROOT BARRIER ADJACENT TO PAVEMENT, CURB, OR SIDEWALK, WHERE PAVEMENT EDGE IS WITHIN 3' OF TREE TRUNK (6' LENGTH ON CENTER 3' EACH SIDE OF TREE).

City of Morgan Hill
Public Works Department
CITY ENGINEER 8/1/97 DATE 3/15/07 REVISED

STANDARD TREE PLANTING & STAKING WITH WITH BUBBLER IRRIGATION

DRAWING NO. L-15

H TREE PLANTING AND STAKING WITH BUBBLER IRRIGATION

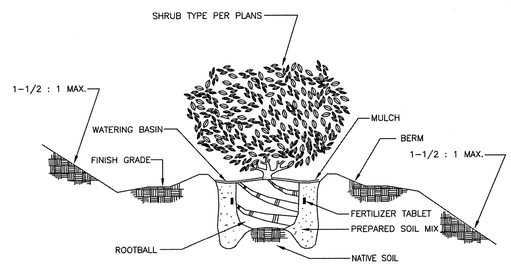

NOTES:
1. SET CROWN 1-1/2" ABOVE FINISH GRADE TO ALLOW FOR SETTLEMENT.
2. WELL DEVELOPED SHRUB ROOTBALL; LIGHTLY SCARIFY PERIMETER.
3. SLOW RELEASE FERTIZER TABLET AS PERSPECIFICATIONS.
4. 4" HIGH BERM TEMPORARY WATER BASIN. INSIDE DIAMETER TO EQUAL ROOTBALL DIAMETER.
5. PLANTING HOLE; TWO TIMES DIAMETER AND DEPTH OF SHRUB ROOTBALL. SCARIFY SIDES AND BOTTOM.
6. MULCH AS PER SPECIFICATIONS.
7. BACKFILL MIXTURE AS PER SPECIFICATIONS.

City of Morgan Hill
Public Works Department
CITY ENGINEER 8/6/98 DATE 3/15/07 REVISED

SHRUB PLANTING

DRAWING NO. L-17

F SHRUB PLANTING

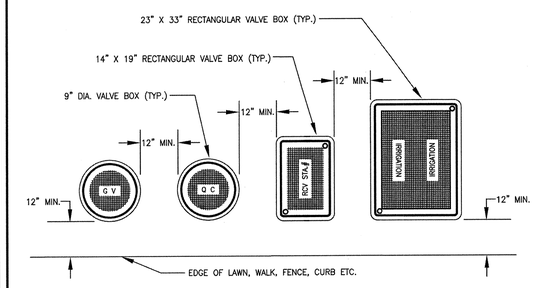

NOTES:
1. CENTER BOX OVER REMOTE CONTROL VALVE TO FACILITATE SERVICING VALVE.
2. SET BOXES 1" ABOVE FINISH GRADE OR MULCH COVER IN GROUND COVER / SHRUB AREA
3. SET RCV AND VALVE BOX ASSEMBLY IN GROUND COVER / SHRUB AREA WHERE POSSIBLE. INSTALL IN LAWN AREA ONLY IF GROUND COVER DOES NOT EXIST ADJACENT TO LAWN.
4. SET BOXES PARALLEL TO EACH OTHER AND PERPENDICULAR TO EDGE.
5. AVOID COMPACTING SOIL AROUND AROUND VALVE BOX EDGES TO PREVENT COLLAPSE AND DEFORMATION OF VALVE BOX SIDES.
6. ALL BOXES SHALL BE "CARSON" OR APPROVED EQUAL, AND BE EQUIPPED WITH BOLT DOWN LIDS.
7. ALL VALVE BOX LIDS SHALL IDENTIFY EQUIPMENT CONTAINED IN BOX BY MOLDING OR BRASS TAG TO LID AS FOLLOWS:
   GATE VALVE - "G.V."
   QUICK COUPLER - "Q.C."
   REMOTE CONTROL VALVE - "R.C.V. STA. #____"
   MISCELANEOUS ELECTRICAL EQUIPMENT - "ELECTRICAL"
   MISCELANEOUS IRRIGATION EQUIPMENT - "IRRIGATION"

City of Morgan Hill
Public Works Department
CITY ENGINEER 8/6/98 DATE REVISED

VALVE BOX LOCATION

DRAWING NO. L-14

D VALVE BOX LOCATION

REGISTERED LANDSCAPE ARCHITECT
DEREK MOORE
No. 4188
Signature
EXPIRATION DATE: DEC. 2017
STATE OF CALIFORNIA

NO.	DESCRIPTION	DATE	BY

Revisions

WORK ACCEPTED: INSPECTOR:
BY: DATE:

DRAWN: RK / JL
DESIGN: CMES
HOR: N/A
CHECKED: CMES / DM
VERT: N/A
APPROVED: KARL D. BJARKO CITY ENGINEER RCE 39416 EXP. 12/31/2017
DATE: 12/15/16
JOB NUMBER: 135013

City of Morgan Hill
Public Works Department
CITY OF MORGAN HILL
17575 Peak Ave. Morgan Hill, CA 95037 (408)778-6480, Fax (408)779-7236

VERDE DESIGN
LANDSCAPE ARCHITECTURE CIVIL ENGINEERING SPORT PLANNING & DESIGN
2455 The Alameda, Ste. 200 Santa Clara, CA 95050 tel: 408.985.7200 fax: 408.985.7260 www.verdedesigninc.com

DEPOT STREET AND E 4TH STREET, MORGAN HILL, CA 95037

IRRIGATION AND PLANTING DETAILS
DEPOT PARK

FILE NUMBER: 1520400
PRINT DATE: 12/07/16
SHEET NUMBER: D3.2

BID DRAWINGS

NOT USED

J

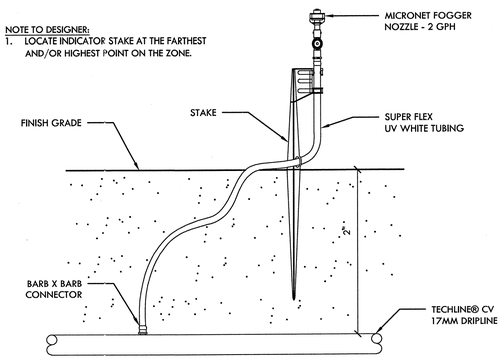

NOTE TO DESIGNER:
1. LOCATE INDICATOR STAKE AT THE FARTHEST AND/OR HIGHEST POINT ON THE ZONE.

H OPERATION PRESSURE INDICATOR NTS

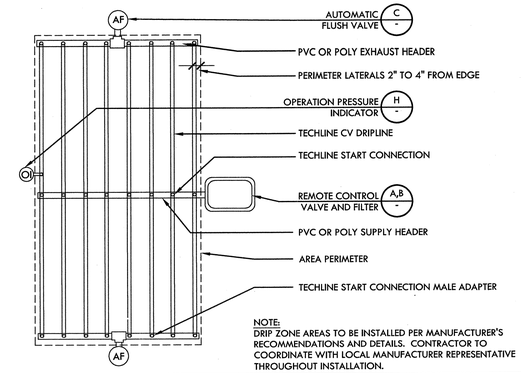

NOTE:
DRIP ZONE AREAS TO BE INSTALLED PER MANUFACTURER'S RECOMMENDATIONS AND DETAILS. CONTRACTOR TO COORDINATE WITH LOCAL MANUFACTURER REPRESENTATIVE THROUGHOUT INSTALLATION.

F DRIP TUBING - CENTER FEED LAYOUT NTS

NOTE:
1. CONTRACTOR TO SELECT PLASTIC VALVE BOX WITH LOCKING LID THAT WILL PROVIDE 3" MINIMUM CLEARANCE ON ALL SIDES OF VALVE.
2. DRIP ZONE AREAS TO BE INSTALLED PER MANUFACTURER'S RECOMMENDATIONS AND DETAILS. CONTRACTOR TO COORDINATE WITH LOCAL MANUFACTURER REPRESENTATIVE THROUGHOUT INSTALLATION.

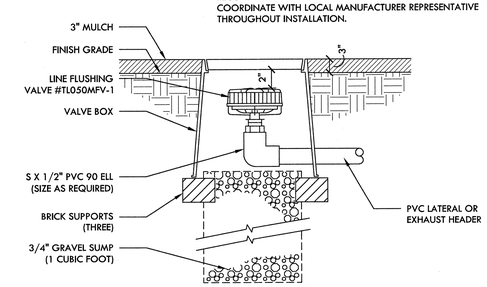

C AUTOMATIC FLUSH VALVE NTS

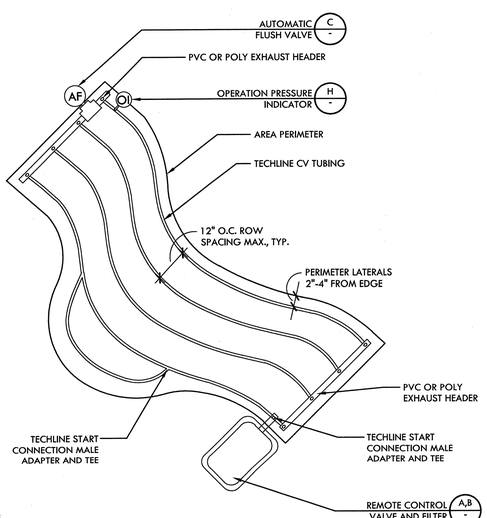

NOTE:
DRIP ZONE AREAS TO BE INSTALLED PER MANUFACTURER'S RECOMMENDATIONS AND DETAILS. CONTRACTOR TO COORDINATE WITH LOCAL MANUFACTURER REPRESENTATIVE THROUGHOUT INSTALLATION.

I DRIP TUBING - CURVED AREA LAYOUT NTS

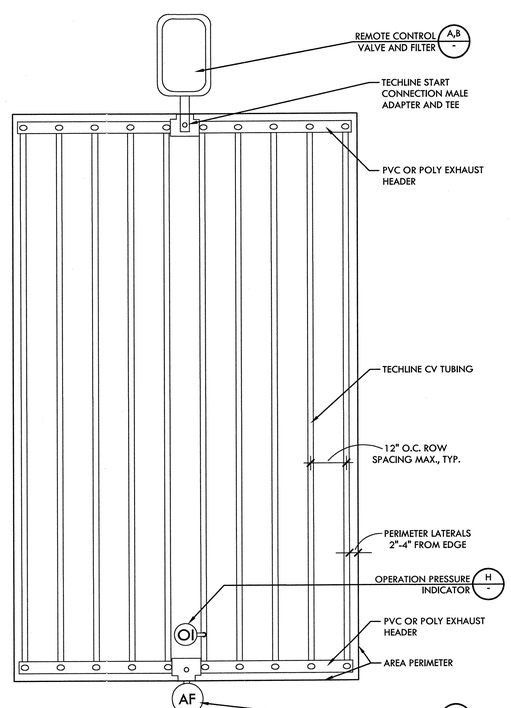

NOTE:
DRIP ZONE AREAS TO BE INSTALLED PER MANUFACTURER'S RECOMMENDATIONS AND DETAILS. CONTRACTOR TO COORDINATE WITH LOCAL MANUFACTURER REPRESENTATIVE THROUGHOUT INSTALLATION.

G DRIP TUBING - RECTANGULAR LAYOUT NTS

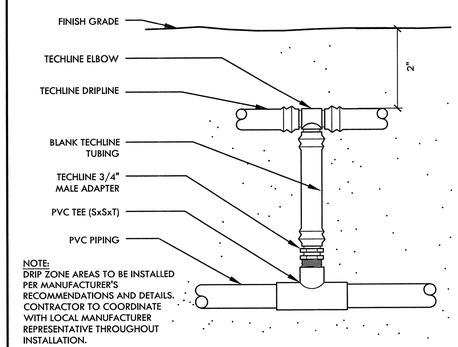

NOTE:
DRIP ZONE AREAS TO BE INSTALLED PER MANUFACTURER'S RECOMMENDATIONS AND DETAILS. CONTRACTOR TO COORDINATE WITH LOCAL MANUFACTURER REPRESENTATIVE THROUGHOUT INSTALLATION.

E TECHLINE START CONNECTION (PVC TO TEE) NTS

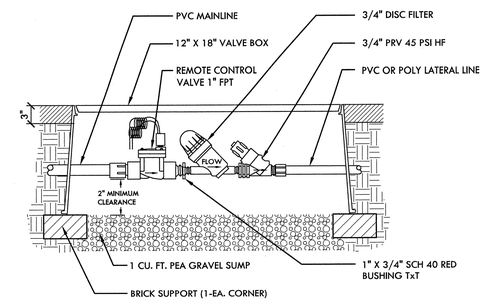

NOTE:
DRIP ZONE AREAS TO BE INSTALLED PER MANUFACTURER'S RECOMMENDATIONS AND DETAILS. CONTRACTOR TO COORDINATE WITH LOCAL MANUFACTURER REPRESENTATIVE THROUGHOUT INSTALLATION.

B REMOTE CONTROL VALVE AND FILTER (HIGH FLOW) NTS

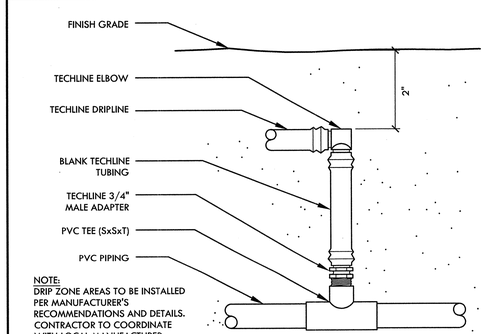

NOTE:
DRIP ZONE AREAS TO BE INSTALLED PER MANUFACTURER'S RECOMMENDATIONS AND DETAILS. CONTRACTOR TO COORDINATE WITH LOCAL MANUFACTURER REPRESENTATIVE THROUGHOUT INSTALLATION.

D TECHLINE START CONNECTION (PVC TO ELBOW) NTS

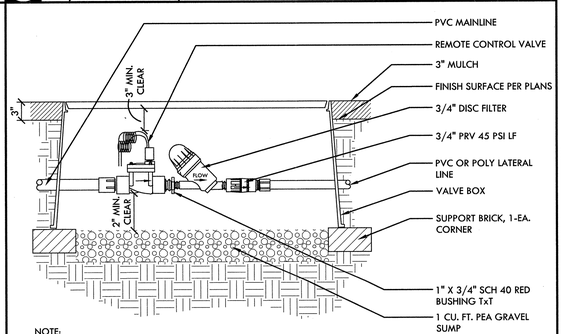

NOTE:
DRIP ZONE AREAS TO BE INSTALLED PER MANUFACTURER'S RECOMMENDATIONS AND DETAILS. CONTRACTOR TO COORDINATE WITH LOCAL MANUFACTURER REPRESENTATIVE THROUGHOUT INSTALLATION.

A REMOTE CONTROL VALVE AND FILTER (LOW FLOW) NTS

REGISTERED LANDSCAPE ARCHITECT
DEREK MOREY
No. 3148
Signature
EXPIRATION DATE: DEC. 2017
STATE OF CALIFORNIA

NO.	DESCRIPTION	DATE	BY

Revisions

WORK ACCEPTED: INSPECTOR:
BY: DATE:

DRAWN: RK / JL
DESIGN: CMES
CHECKED: CMES / DM
APPROVED:
DATE: 12/15/16
KARL D. BURKE - CITY ENGINEER
RCE 39416 EXP. 12/31/2017

HOR: N/A
VERT: N/A
JOB NUMBER: 135013

CITY OF MORGAN HILL
City of Morgan Hill
Public Works Department
17575 Peak Ave. Morgan Hill, CA 95037 (408)778-6480, Fax (408)779-7236

VERDE DESIGN
LANDSCAPE ARCHITECTURE
CIVIL ENGINEERING
SPORT PLANNING & DESIGN
2455 The Alameda, Ste. 200
Santa Clara, CA 95050
tel: 408.985.7200
fax: 408.985.7260
www.verdedesigninc.com

DEPOT STREET AND E 4TH STREET, MORGAN HILL, CA 95037

IRRIGATION AND PLANTING DETAILS
DEPOT PARK

FILE NUMBER: 1520400
PRINT DATE: 12/07/16
SHEET NUMBER: D3.3

BID DRAWINGS

SYMBOL LIST:

Symbol	Description
1 / E1.1	PLAN, DETAIL OR SECTION DESIGNATION.
201	ROOM NUMBER.
1	SHEET REFERENCE SYMBOL - SEE ASSOCIATED NOTE ON SAME SHEET.
3	FEEDER SCHEDULE SYMBOL.
CH / 1	MECHANICAL EQUIPMENT TAG.
A	INDICATES FIXTURE TYPE

LUMINAIRE SYMBOLS

LUMINAIRE - SEE SCHEDULE.

LUMINAIRE - SEE SCHEDULE.

LUMINAIRE - SEE SCHEDULE.

LUMINAIRE - SEE SCHEDULE.

POLE MOUNTED LUMINAIRE - SEE SCHEDULE.

POLE MOUNTED LUMINAIRE - SEE SCHEDULE.

LUMINAIRE - SEE SCHEDULE.

LUMINAIRE - SEE SCHEDULE.

LUMINAIRE WALL MOUNTED-SEE SCHEDULE.

EMERGENCY LUMINAIRE - PROVIDE EMERGENCY BATTERY BALLAST

EM — EMERGENCY LUMINAIRE - PROVIDE EMERGENCY BATTERY BALLAST

EMERGENCY LUMINAIRE - PROVIDE EMERGENCY BATTERY BALLAST

EMERGENCY LUMINAIRE - PROVIDE EMERGENCY BATTERY BALLAST

EMERGENCY LUMINAIRE WALL MOUNTED- PROVIDE EM. BATTERY BALLAST

EXIT LIGHT SINGLE FACE - SEE SCHEDULE.

EXIT LIGHT SINGLE FACE (WITH ARROW)- SEE SCHEDULE.

EXIT LIGHT (DOUBLE FACED WITH ARROW)- SEE SCHEDULE.

EMERGENCY BATTERY PACK EXIT LIGHT INSTALL AS DIRECTED.

TYPICAL LUMINAIRE NOMENCLATURE

3a — INDICATES SWITCHING DESIGNATION

└ INDICATES CIRCUIT NUMBER

SWITCH SYMBOLS

Symbol	Description
$	SINGLE POLE SWITCH, + 48" AFF TO THE TOP OF THE OUTLET BOX UON.
$a	SINGLE POLE SWITCH, + 48" AFF TO THE TOP OF THE OUTLET BOX, a = CIRCUIT CONTROLLED.
$3	THREE WAY SWITCH + 48" AFF TO THE TOP OF THE OUTLET BOX UON.
$4	FOUR WAY SWITCH + 48" AFF TO THE TOP OF THE OUTLET BOX UON.
$	MOTOR RATED SWITCH
LVS a	WALL MOUNTED LOW VOLTAGE "DATALINE SWITCH =48" FROM TOP OF BOX, UON, a = CIRCUIT CONTROLLED

RECEPTACLE SYMBOLS

CONVENIENCE RECEPTACLE - DUPLEX AT + 18" AFF UON.

GFCI CONVENIENCE RECEPTACLE - DUPLEX.

RECEPTACLE - DOUBLE DUPLEX AT + 18" AFF UON.

RECEPTACLE - DOUBLE DUPLEX ON CEILING

SINGLE RECEPTACLE - NEMA 5-20R UON, AT + 18" AFF UON.

SINGLE RECEPTACLE - NEMA L21 - 208 VOLT, THREE PHASE, 5 WIRE, AT + 18" AFF UON.

3-CHANNEL SURFACE RACEWAY, INSTALL AT +36" AFF UON. RACEWAY SHALL BE WIREMOLD #5500.

POWER DISTRIBUTION SYMBOLS

Symbol	Description
	PANELBOARD - SURFACE OR FLUSH MOUNTED.
LCP	LIGHTING CONTROL CABINET.
EM	EMERGENCY POWER INVERTER.
J	JUNCTION BOX - CEILING OR WALL MOUNTED, SIZE PER CEC, TAPE AND TAG WIRES.
	MAIN SWITCHBOARD OR DISTRIBUTION PANEL.
M	MOTOR
30	RATING AS INDICATED.
60	UNFUSED DISCONNECT SWITCH - RATING AS INDICATED.
100	FUSED DISCONNECT SWITCH - SIZE FUSES PER MOTOR MANUFACTURER'S RECOMMENDATIONS. RATING AS INDICATED.
II	MAGNETIC STARTER - NEMA SIZE INDICATED.
T	TRANSFORMER - SEE SINGLE LINE FOR REQUIREMENTS.
	GROUND ROD.
P	IN-GRADE ELECTRICAL PULL BOX WITH TRAFFIC RATED LID.
L	IN-GRADE LIGHTING PULL BOX WITH TRAFFIC RATED LID.
S	IN-GRADE SIGANL PULL BOX WITH TRAFFIC RATED LID.

POWER DISTRIBUTION SINGLE LINE SYMBOLS

DRAW-OUT CIRCUIT BREAKER.

CIRCUIT BREAKER.

FUSED SWITCH.

"PG&E" METER W/ CURRENT TRANSFORMER.

TRANSFORMER.

NORMALLY OPENED, AUXILIARY CONTACT.

NORMALLY CLOSED, AUXILIARY CONTACT.

AUTOMATIC TRANSFER SWITCH.

EMERGENCY GENERATOR.

WIRING & CONDUIT RUN SYMBOLS

CONDUIT - CONCEALED IN WALLS OR CEILING.

CONDUIT - EXPOSED.

CONDUIT - IN OR BELOW FLOOR: 3/4"MIN.

EXISTING CONDUIT, CABLES OR DEVICE

#10 / G — CONDUIT - HOME RUN TO PANEL, TERMINAL CABINET, ETC. RUNS MARKED WITH CROSSHATCHES INDICATE NUMBER OF #12 AWG WIRES. CROSSHATCH WITH SUBSCRIPT "G" INDICATES GREEN GROUND WIRE. SIZE CONDUIT ACCORDING TO SPECIFICATIONS AND APPLICABLE CODE. CROSSHATCHES WITH "#10" INDICATES WIRE SIZE OTHER THAN #12'S.

FLEX CONDUIT WITH CONNECTION.

CONDUIT - STUB UP.

CONDUIT - STUB DOWN.

—E—E— CONDUIT EMERGENCY SYSTEM.

E— CAPPED CONDUIT.

CONDUIT CONTINUATION.

GENERAL NOTES:

1. THE CONTRACTOR SHALL BE LICENSED BY THE STATE OF CALIFORNIA C-10 AND SHALL COMPLY WITH ALL APPLICABLE CODES AND REGULATIONS. MATERIALS AND EQUIPMENT SHALL BE U.L. LISTED AND LABELED FOR THE APPLICATION.
2. THE CONTRACTOR SHALL OBTAIN AND PAY FOR ALL PERMITS, LICENSES AND INSPECTION FEES REQUIRED BY THIS CONTRACT WORK.
3. PRIOR TO SUBMITTING A BID THE CONTRACTOR SHALL VISIT THE SITE, REVIEW THE EXISTING CONDITIONS AND ALLOW FOR LABOR, MATERIAL AND COORDINATION THAT IS NECESSARY TO PROVIDE A COMPLETE INSTALLATION OF EACH SYSTEM. THE CONTRACTOR SHALL OBTAIN AND BE FAMILIAR WITH ALL OTHER TRADES. THE CONTRACTOR SHALL BE RESPONSIBLE FOR ALL ELECTRICAL WORK NOTED AND CALLED OUT ON ALL CONTRACT DOCUMENTS. THE CONTRACTOR SHALL BE RESPONSIBLE FOR COORDINATION BETWEEN OTHER TRADES ON PROJECT.
4. THE CONTRACTOR SHALL BE RESPONSIBLE FOR THE SAFETY OF PERSONS AND PROPERTY AND SHALL PROVIDE INSURANCE COVERAGE AS NECESSARY FOR LIABILITY, PERSONAL, PROPERTY DAMAGE, TO FULLY PROTECT THE OWNER, ARCHITECT AND ENGINEER FROM ANY AND ALL CLAIMS RESULTING FROM THIS WORK.
5. THE CONTRACTOR SHALL MAINTAIN RECORD DRAWINGS AT THE PROJECT SITE INDICATING ALL MODIFICATIONS TO ELECTRICAL SYSTEMS. THE CONTRACTOR SHALL AT THE CONCLUSION OF THE PROJECT PROVIDE ACCURATE "AS-BUILT" DRAWINGS. "AS-BUILT" DRAWINGS SHALL SHOW ACTUAL CHANGES TO ORIGINAL ELECTRICAL DRAWING, SHOW LOCATIONS OF PULL BOXES, CONDUIT RUNS AND WIRING CHANGES. THE CONTRACTOR SHALL PROVIDE ONE (1) HARDCOPY SET OF DOCUMENT DRAWINGS AND ONE (1) SET OF DOCUMENT DRAWINGS IN ELECTRONIC CAD FILE THAT REPRESENTS THE ACTUAL "AS-BUILTS". CAD FILES SHALL BE AUTOCAD 2000 FORMAT.
6. ALL MATERIALS PROVIDED TO THE PROJECT SHALL BE NEW. THE CONTRACTOR SHALL BE RESPONSIBLE TO PROVIDE AND INSTALL ALL INCIDENTAL MATERIALS REQUIRED FOR A COMPLETE INSTALLATION.
7. THE CONTRACTOR SHALL PROVIDE TO THE LANDSCAPE ENGINEERS A CONSTRUCTION SCHEDULE OF ELECTRICAL WORK. THE CONSTRUCTION SCHEDULE SHALL IDENTIFY ALL SIGNIFICANT MILESTONES WITH COMPLETION DATES.
8. THE CONTRACTOR SHALL PROVIDE ALL REQUIRED "CUTTING, PATCHING, EXCAVATION, BACKFILL AND REPAIRS" NECESSARY TO RESTORE DAMAGED SURFACES TO EQUAL OR BETTER THAN ORIGINAL CONDITIONS EXISTING AT START OF WORK. THE CONTRACTOR SHALL CONTACT "UNDERGROUND SERVICES ALERT" FOR LOCATION OF EXISTING UTILITIES PRIOR TO COMMENCEMENT OF UNDERGROUND WORK.
9. THE CONTRACTOR SHALL BE RESPONSIBLE FOR PAINTING ALL EXPOSED CONDUITS AND ELECTRICAL EQUIPMENT. REFER TO ARCHITECTS PAINTING SECTION FOR REQUIREMENTS.
10. ALL ELECTRICAL EQUIPMENT INSTALLED OUTDOORS SHALL BE WEATHERPROOF. EXTERIOR CONDUITS RUN INTO BUILDINGS SHALL BE INSTALLED WITH FLASHING, CAULKED AND SEALED. CONDUITS FOR EXTERIOR ELECTRICAL DEVICES SHALL BE RUN INSIDE BUILDING UNLESS OTHERWISE NOTED ON DRAWINGS. ALL EXTERIOR CONDUITS SHALL BE "RSG" UNLESS OTHERWISE NOTED ON DRAWINGS.
11. ALL CONDUITS UNLESS OTHERWISE NOTED ON DRAWINGS SHALL HAVE AS A MINIMUM: TWO (2) #12'S WITH ONE (1) #12 GROUND. "TICK" MARKS SHOWN ON CIRCUITRY ARE FOR "ROUGH" ESTIMATING ONLY. THE CONTRACTOR SHALL BE RESPONSIBLE FOR ALL WIRES AND WIRE SIZES REQUIRED BY LATEST CODE.
12. COORDINATE ALL CONDUIT RUNS, ELECTRICAL EQUIPMENT AND PANELS WITH ALL OTHER WORK TO AVOID CONFLICTS.
13. SEE LANDSCAPE ENGINEER'S DOCUMENTS FOR EXACT PLACEMENT OF LIGHTING FIXTURES AND DEVICES. THE ELECTRICAL CONTRACTOR SHALL BE RESPONSIBLE FOR VERIFICATION OF CEILING TYPES FROM LANDSCAPE ENGINEER'S DOCUMENTS AND PROVIDE AND INSTALL ALL REQUIRED FIXTURE MOUNTING HARDWARE. PROVIDE AND INSTALL U.L. LISTED FIRE STOP ENCLOSURES FOR ALL RECESSED FIXTURES IN FIRE RATED CEILINGS.
14. THE CONTRACTOR SHALL PROVIDE IN EVERY CONDUIT A DRAW STRING FOR USE IN FUTURE CONSTRUCTION.
15. POWER FEEDERS MAY NOT BE SHOWN ON THE DRAWINGS, REFER TO THE SINGLE LINE DIAGRAM FOR CONDUIT AND FEEDER INFORMATION. ALL DRAWINGS ARE DIAGRAMMATIC INDICATING LOCATION OR POSITION OF EQUIPMENT. FIELD VERIFY CONDITIONS PRIOR TO INSTALLATION OF ANY WORK.
16. MANUFACTURER'S RECOMMENDATIONS FOR CONDUCTOR SIZING, CIRCUIT BREAKER OR FUSE PROTECTION OF ELECTRICALLY OPERATED EQUIPMENT MAY DIFFER FROM THOSE INDICATED ON DRAWINGS. CONTRACTOR SHALL CONFIRM RATINGS PRIOR TO ORDERING EQUIPMENT. PROVIDE ELECTRICAL PROTECTION TO EQUIPMENT IN ACCORDANCE TO MANUFACTURER'S SPECIFICATIONS AND PER NATIONAL ELECTRICAL CODE REQUIREMENTS.
17. CONTRACTOR SHALL REVIEW EQUIPMENT REQUIREMENTS OF OTHER TRADES AND PROVIDE POWER CIRCUITS AND CONNECTIONS TO ELECTRICALLY OPERATED EQUIPMENT.
18. EFFECTIVELY BOND ELECTRICAL CABINETS, ENCLOSURES AND CONDUIT RACEWAYS TO CODE APPROVED GROUND AS PART OF THE CONTINUOUS GROUNDING SYSTEM.
19. MEASEURE THE 3-PHASE AND PHASE TO NEUTRAL SERVICE VOLTAGE FOR 208/120V PANELS PRIOR TO ENERGIZING ANY PANELS OR EQUIPMENT. AVOID ENERGIZING 208/120V PANELS PHASE TO NEUTRAL VOLTAGE ABOVE 130 VOLTS. TRANSFORMER TAP SETTING MAY REQUIRE CHANGING.
20. MEASURE THE 1-PHASE AND PHASE TO NEUTRAL SERVICE VOLTAGE FOR 240/120V PANELS PRIOR TO ENERGIZING ANY PANELS OR EQUIPMENT. AVOID ENERGIZING 240/120V PANELS PHASE TO NEUTRAL VOLTAGE ABOVE 130 VOLTS.
21. DO NOT SUBSTITUTE SPECIFIED MATERIAL OR EQUIPMENT WITHOUT FIRST OBTAINING APPROVAL FROM THE OWNER OR HIS REPRESENTATIVE.
22. IDENTIFY ALL ABOVE CEILING JUNCTION BOXES COVERS WITH PANEL AND CIRCUITS IN LEGIBLE PRINT USING BLACK INDELIBLE INK. ABOVE CEILING JUNCTION BOXES SHALL ALSO BE LABELED AT THE REAR INTERIOR BOX WITH AN INDELIBLE BLACK MARKER.
23. LABEL ALL WALL AND/OR WIREMOLD MOUNTED OUTLET DEVICES WITH PANEL CIRCUIT IDENTIFICATION WITH BOLD TYPE-PRINTED LABELING. BLACK LETTERING ON WHITE BACKGROUND PREFERRED.
24. DERATE CONDUCTORS IN RACEWAYS IN ACCORDANCE WITH NEC CODE REQUIREMENTS. PANEL FEEDERS TO WIREMOLDS CAN ENTER AT VARIOUS LOCATIONS TO LIMIT CONDUCTOR CIRCUITS PER WIREMOLD CAPACITIES.

THE CONTRACTOR SHALL BE RESPONSIBLE FOR SITE LOCATING ALL EXISTING UNDERGROUND SYSTEMS IN AREA OF NEW TRENCHING. THE CONTRACTOR SHALL BE RESPONSIBLE FOR REPAIRING ALL DAMAGED SYSTEMS TO OWNERS SATISFACTION. EXTREME CARE SHALL BE MAINTAINED DURING TRENCHING AS EXISTING SYSTEMS ARE KNOWN TO EXIST IN AREA. MODIFICATIONS TO EXISTING SYSTEMS MAY BE REQUIRED TO ACCOMMODATE NEW SYSTEM CONFIGURATION AND SHALL BE MADE BY THE CONTRACTOR WITHOUT EXTRA EXPENSE TO THE OWNER THE DRAWINGS AND SPECIFICATIONS ARE FOR THE ASSISTANCE AND GUIDANCE OF THE CONTRACTOR. EXACT LOCATIONS, DISTANCES AND ELEVATIONS WILL BE GOVERNED BY ACTUAL CONDITIONS. THE CONTRACTOR SHALL EXAMINE THE CONTRACT DOCUMENTS AND FIELD CONDITIONS TO DETERMINE EXACT ROUTING AND FINAL TERMINATIONS FOR ALL NEW WORK.

ABBREVIATIONS

A	AMPERE
ABV	ABOVE
AF	AMP FRAME OR AMP FUSE
AFF	ABOVE FINISHED FLOOR
ARCH	ARCHITECTURAL
AS	AMP SWITCH
AT	AMP TRIP
ATS	AUTOMATIC TRANSFER SWITCH
BKR	BREAKER
BLDG	BUILDING
C	CONDUIT
CATV	CABLE TELEVISION
CB	CIRCUIT BREAKER
CD	CANDELAS
CKT	CIRCUIT
CL	CENTER LINE
CLG	CEILING
CO	CONDUIT ONLY
CTR	CENTER
(D)	DEMOLISH
DET	DETAIL
DIM	DIMENSION
DISTR	DISTRIBUTION
DWG	DRAWING
(E)	EXISTING
EM	EMERGENCY
EQPT	EQUIPMENT
FA	FIRE ALARM
FACP	FIRE ALARM CONTROL PANEL
(F)	FUTURE
FIN	FINISH
FL	FLOOR
G , GND	GROUND
HGT	HEIGHT
HP	HORSEPOWER
IC	INTERCOM
IDF	INTERMEDIATE DISTRIBUTION FRAME
JB	JUNCTION BOX
KAIC	KILOAMPERE INTERRUPTING CAPACITY
KV	KILOVOLT
KVA	KILOVOLT AMPERES
KW	KILOWATT
LTG	LIGHTING
MCM	THOUSAND CIRCULAR MILS
MDF	MAIN DISTRIBUTION FRAME
MECH	MECHANICAL
MH	MANHOLE
MTD	MOUNTED
MTG	MOUNTING
(N)	NEW
NC	NORMALLY CLOSED
NIC	NOT IN CONTRACT
NIEC	NOT IN ELECTRICAL CONTRACT
NO	NUMBER/ NORMALLY OPEN
NTS	NOT TO SCALE
O.C.	ON CENTER
P	POLE CIRCUIT BREAKER
PA	PUBLIC ADDRESS
PB	PULL BOX
PF	POWER FACTOR
PH	PHASE
PNL	PANEL
(R)	EXISTING TO BE RELOCATED
REQD	REQUIRED
REQT	REQUIREMENT(S)
RM	ROOM
RSC	RIGID STEEL CONDUIT
SHT	SHEET
SW	SWITCH
SWBD	SWITCHBOARD
TC	TERMINAL CABINET
TEL	TELEPHONE
TYP	TYPICAL
UON	UNLESS OTHERWISE NOTED
V	VOLT
W	WATT
WP	WEATHERPROOF
XFMR	TRANSFORMER

SHEET NO.	ELECTRICAL SHEET TITLE
E0.1	COVER SHEET
E0.2	TITLE 24 EXTERIOR LIGHTING - PART 1
E0.3	TITLE 24 EXTERIOR LIGHTING - PART 2
E1.1	ELECTRICAL LIGHTING SITE PLAN
E1.2	WIRELESS ACCESS POINT & SECURITY CAMERA SITE PLAN
E2.1	SINGLE LINE DIAGRAM
E2.2	DATA AND SECURITY CAMERA RISER DIAGRAM
E4.1	ELECTRICAL DETAILS
E4.2	ELECTRICAL DETAILS

FIXTURE SCHEDULE

TYPE	LAMPS	LED DRIVER	MOUNTING	DESCRIPTION	WEIGHT
A	105LA LED	AUTOMATIC DIMMING, DRIVER BY MANUFACTURER	MOUNTED ON A 20' POLE WITH FLUSHED POLE BASE	POLE MOUNTED SINGLE/DOUBLE HEAD LUMINAIRE. FIXTURE HOUSING SHALL BE ONE PIECE DIE CAST ALUMINUM. FIXTURE EPA SHALL BE A MAXIMUM OF .35 FT^2. LENSED LED ARRAYS ARE SET TO ACHIEVE TYPE II DISTRIBUTION AND OPTICAL SYSTEMS ARE FIELD ROTATABLE UTILIZING HIGH PERFORMANCE CLASS I LED SYSTEMS. LUMINAIRE SHALL BE EQUIPPED WITH AN LED 0-10V DIMMING DRIVER THAT ACCEPTS 120V THROUGH 277V 60HZ INPUT. DRIVER OUTPUT SHALL BE BASED ON LED WATTAGE SELECTED. FINISH SHALL BE FADE AND ABRASION RESISTANT, ELECTROSTATICALLY APPLIED, THERMALLY CURED TGIC POLYESTER POWDERCOAT FINISH IN BRONZE COLOR. FIXTURE SHALL BE UL LISTED FOR WET LOCATION. POLES SHALL BE 20' HIGH, 4" STRAIGHT SQUARE STEEL. THE POLE SHAFT SHALL BE A SINGLE PIECE 11 GAUGE CARBON STEEL. THE FORMED STEEL PLATE SHALL BE LONGITUDINALLY WELDED PROVIDING MINIMUM YIELD STRENGTH OF 46KSI. THE ANCHOR BASE SHALL BE A-36 STRUCTURAL CARBON STEEL WITH A MINIMUM YEILD STRENGTH OF 36KSI. THE BASE PLATE SHALL TELESCOPE INTO THE POLE SHAFT AND BE CIRCUMFERENTIALLY WELDED ON THE TOP AND BOTTOM. ANCHOR BOLTS SHALL BE PROVIDED WITH THE POLE. ANCHOR BOLTS SHALL MEET OR EXCEED YIELD STRENGTH OF 50,000PSI. EACH ANCHOR BOLT SHALL BE PROVIDED WITH ALL HARDWARE NECESSARY FOR POLE INSTALLATION. BASE COVER SHALL BE TWO PIECE AND CONCEAL THE ENTIRE BASE PLATE AND ANCHORAGE. POLE SHALL BE PROVIDED WITH A HANDHOLE 12" ABOVE THE BASE. HANDHOLE SHALL BE PROVIDED WITH A COVER PLATE AND ATTACHMENT SCREWS. POLE SHALL ALSO BE PROVIDED WITH A POLE TOP CAP. FINISH SHALL BE TGIC POLYESTER POWDER COAT ELECTROSTATICALLY APPLIED AND THERMALLY CURED AND SHALL BE BLACK IN COLOR. POLES SHALL BE FACTORY DRILLED FOR PROPER FIXTURE INSTALLATION. ALL POLES SHALL BE PROPERLY LEVELED AND VERTICAL. LIGHTING FIXTURE HEADS SHALL BE MOUNTED TO THE POLE PER THE MANUFACTURERS RECOMMENDATIONS. GARDCO - PUREFORM #P21-APD-MR1-A3-1-2-105LA-CW-UNV-BRD-PCB-SPA3 OR APPROVED EQUAL 120V POLE - KW SSP-20-4-11-TBD-DM10-BC OR APPROVED EQUAL.	40 LBS

American Consulting Engineers Electrical, Inc.
1590 The Alameda Suite 200
San Jose, CA 95126
JOB #E16140.00
408/236-2312
Fax: 408/236-2316

REGISTERED PROFESSIONAL ENGINEER SAMMY S. FERNANDEZ E16690 Exp. 06/30/17 ELECTRICAL STATE OF CALIFORNIA

NO.	DESCRIPTION	DATE	BY	WORK ACCEPTED:	INSPECTOR:
				BY:	DATE:
Revisions					

DRAWN: MG	DESIGN: KC	HOR: N/A
CHECKED: SF		VERT: N/A
APPROVED: [signature] KARL D. BJARKE CITY ENGINEER RCE 39416 EXP. 12/31/2017	DATE: 12/15/16	JOB NUMBER: 135013

City of Morgan Hill
CITY OF MORGAN HILL
Public Works Department
17575 Peak Ave. Morgan Hill, CA 95037 (408)778-6480, Fax (408)779-7236

DEPOT STREET AND E 4TH STREET, MORGAN HILL, CA 95037

GENERAL NOTES, SYMBOL LIST, ABBREVIATIONS AND FIXTURE SCHEDULE

DEPOT PARK

FILE NUMBER: 1520400
PRINT DATE: 12/07/16
SHEET NUMBER: E0.1

BID DRAWINGS

STATE OF CALIFORNIA
OUTDOOR LIGHTING
CEC-NRCC-LTO-01-E (Revised 09/16)
CALIFORNIA ENERGY COMMISSION

CERTIFICATE OF COMPLIANCE	NRCC-LTO-01-E
Outdoor Lighting	(Page 1 of 4)
Project Name: Morgan Hill Downtown - DEPOT Park	Date Prepared: 8/25/2016

Project Address: Depot Street & E 4th Street Morgan Hill, CA 95037	Total Illuminated Hardscape Area 1,603
General Information Phase of Construction: ☑ New Construction ☐ Addition ☐ Alteration	
Outdoor Lighting Zone (OLZ) ☐ OLZ-1 ☐ OLZ-2 ☑ OLZ-3 ☐ OLZ-4 I have confirmed with the AHJ which OLZ applies to this site. For default lighting zone designations, see Title 24 Part 6, §10-114	

LIGHTING COMPLIANCE DOCUMENTS (check box for each document included)

For detailed instructions on the use of this and all Energy Efficiency Standards compliance documents, refer to the Nonresidential Manual published by the California Energy Commission.

☑	NRCC-LTO-01-E	Certificate of Compliance
☑	NRCC-LTO-02-E	Outdoor Lighting Controls Certificate of Compliance
☑	NRCC-LTO-03-E	Outdoor Lighting Power Allowance Certificate of Compliance

Summary of Allowed Outdoor Lighting Power			Watts
1.	**Sum Total ALLOWED** Outdoor Lighting Wattage from NRCC-LTO-03-E, page 1	=	1,148
	Complies ONLY if **Installed** ≤ **Allowed**		↕
2.	**Sum Total INSTALLED** Outdoor lighting Wattage from NRCC-LTO-01-E, page 3		309

Declaration of Required Installation Certificates – Declare by checking all Installation Certificates that will be submitted. (Retain copies and verify forms are completed and signed.)

☑ NRCI-LTO-01-E - Must be submitted for all buildings	☐ Field Inspector
☑ NRCI-LTO-02-E - Must be submitted for a lighting control system, or for an Energy Management Control System (EMCS), to be recognized for compliance.	☐ Field Inspector

Declaration of Required Certificates of Acceptance – Declare by checking all of the Certificates of Acceptance that will be submitted. (Retain copies and verify forms are completed and signed.)

☑ NRCA-LTO-02-A - Must be submitted for outdoor lighting controls.	☐ Field Inspector

STATE OF CALIFORNIA
OUTDOOR LIGHTING
CEC-NRCC-LTO-01-E (Revised 09/16)
CALIFORNIA ENERGY COMMISSION

CERTIFICATE OF COMPLIANCE	NRCC-LTO-01-E
Outdoor Lighting	(Page 2 of 4)
Project Name: Morgan Hill Downtown - DEPOT Park	Date Prepared: 8/25/2016

Schedule of luminaires exempt from the outdoor lighting power requirements in §140.7

Name or Symbol	Description of exempt luminaire in accordance with the exemptions

Schedule of luminaires exempt from the cutoff requirements in §130.2(b)

Name or Symbol	Description of exempt luminaire in accordance with the exemptions

Schedule of luminaires exempt from the outdoor lighting control requirements in §130.2(c)

Name or Symbol	Description of exempt luminaire in accordance with the exemptions

STATE OF CALIFORNIA
OUTDOOR LIGHTING
CEC-NRCC-LTO-01-E (Revised 09/14)
CALIFORNIA ENERGY COMMISSION

CERTIFICATE OF COMPLIANCE	NRCC-LTO-01-E
Outdoor Lighting	(Page 3 of 4)
Project Name: Morgan Hill Downtown - DEPOT Park	Date Prepared: 8/25/2016

A. OUTDOOR LIGHTING SCHEDULE and FIELD INSPECTION ENERGY CHECKLIST

Luminaire Schedule		Installed Watts					Location	Cutoff	Field Inspector	
A	B	C	D		E	F	G	H	I	
Name or Item Tag	Complete Luminaire Description	Watts per Luminaire	How wattage was determined: CEC Default from NA8	How wattage was determined: According to §130.0(c)	Number of Luminaires	Total Installed Watts in this area (C x E)	Primary Function area in which these luminaires are installed	BUG Rating	Pass	Fail
A	Pole Mounted Luminaire 20' high	103.0	☑	☐	3	309	Pedestrian Hardscape		☐	☐
			☐	☐					☐	☐
			☐	☐					☐	☐
			☐	☐					☐	☐
			☐	☐					☐	☐
			☐	☐					☐	☐
			☐	☐					☐	☐
			☐	☐					☐	☐
			☐	☐					☐	☐
			☐	☐					☐	☐
			☐	☐					☐	☐
			☐	☐					☐	☐
			☐	☐					☐	☐
			☐	☐					☐	☐
			☐	☐					☐	☐
			☐	☐					☐	☐
			☐	☐					☐	☐
			☐	☐					☐	☐
			☐	☐					☐	☐
			☐	☐					☐	☐
			☐	☐					☐	☐
			☐	☐					☐	☐
		INSTALLED WATTS PAGE TOTAL:				309	Enter sum total of all pages (**Sum Total INSTALLED** Outdoor lighting wattage) into NRCC-LTO-01-E; Page 1		309	

STATE OF CALIFORNIA
OUTDOOR LIGHTING
CEC-NRCC-LTO-01-E (Revised 09/14)
CALIFORNIA ENERGY COMMISSION

CERTIFICATE OF COMPLIANCE	NRCC-LTO-01-E
Outdoor Lighting	(Page 4 of 4)
Project Name: Morgan Hill Downtown - DEPOT Park	Date Prepared: 8/25/2016

DOCUMENTATION AUTHOR'S DECLARATION STATEMENT

1. I certify that this Certificate of Compliance documentation is accurate and complete.

Documentation Author Name:		Documentation Author Signature:	
Company:	American Consulting Engr. Elec., Inc	Signature Date:	8/25/2016
Address:		CEA Certification Identification (if applicable):	
City/State/Zip:		Phone:	

RESPONSIBLE PERSON'S DECLARATION STATEMENT

I certify the following under penalty of perjury, under the laws of the State of California:

1. The information provided on this Certificate of Compliance is true and correct.
2. I am eligible under Division 3 of the Business and Professions Code to accept responsibility for the building design or system design identified on this Certificate of Compliance (responsible designer).
3. The energy features and performance specifications, materials, components, and manufactured devices for the building design or system design identified on this Certificate of Compliance conform to the requirements of Title 24, Part 1 and Part 6 of the California Code of Regulations.
4. The building design features or system design features identified on this Certificate of Compliance are consistent with the information provided on other applicable compliance documents, worksheets, calculations, plans and specifications submitted to the enforcement agency for approval with this building permit application.
5. I will ensure that a completed signed copy of this Certificate of Compliance shall be made available with the building permit(s) issued for the building, and made available to the enforcement agency for all applicable inspections. I understand that a completed signed copy of this Certificate of Compliance is required to be included with the documentation the builder provides to the building owner at occupancy.

Responsible Designer Name:	Sammy S. Fernandez	Responsible Designer Signature:	
Company:	American Consulting Engineers Electrical,	Date Signed:	
Address:	1590 The Alameda Suite 200	License:	E16890
City/State/Zip:	San Jose, CA 95126	Phone:	408-236-2312

STATE OF CALIFORNIA
OUTDOOR LIGHTING CONTROLS
CEC-NRCC-LTO-02-E (Revised 05/15)
CALIFORNIA ENERGY COMMISSION

CERTIFICATE OF COMPLIANCE	NRCC-LTO-02-E
Outdoor Lighting Controls	(Page 1 of 3)
Project Name: Morgan Hill Downtown - DEPOT Park	Date Prepared: 8/25/2016

The NRCC-LTO-02-E shall be used to document all mandatory outdoor lighting controls that are applicable to the project.

Mandatory Outdoor Lighting Control Declaration Statements

Check all that apply:

- ☐ Lighting shall be controlled by self-contained lighting control devices which are certified to the Energy Commission according to the Title 20 Appliance Efficiency Regulations in accordance with §110.9(a).
- ☐ Lighting shall be controlled by a lighting control system or energy management control system in accordance with §110.9. An Installation Certificate shall be submitted in accordance with §130.4(b).
- ☑ All lighting controls and equipment shall comply with the applicable requirements in §110.9 and shall be installed in accordance with the manufacturer's instructions in accordance with §130.1
- ☐ Part-Night Outdoor Lighting Controls, as defined in Section 100.1(b), shall meet the requirements in Section 110.9(b)5
- ☐ All outdoor incandescent luminaires rated over 100 watts, determined in accordance with Section 130.0(c), shall be controlled by a motion sensor.
- ☐ All outdoor luminaires rated for use with lamps greater than 150 lamp watts, determined in accordance with Section 130.0(c), shall comply with Backlight, Uplight, and Glare (collectively referred to as "BUG") in accordance with Section 130.2(b)
- ☐ All installed outdoor lighting shall be controlled by a photocontrol or outdoor astronomical time-switch control in accordance with Section 130.2(c)1
- ☑ All installed outdoor lighting shall be circuited and independently controlled from other electrical loads by an automatic scheduling control in accordance with Section 130.2(c)2
- ☐ All installed outdoor lighting, where the bottom of the luminaire is mounted 24 feet or less above the ground, shall be controlled with automatic lighting controls in accordance with Section 130.2(c)3
- ☐ For Outdoor Sales Frontage, Outdoor Sales Lots, and Outdoor Sales Canopies lighting, an automatic lighting control in accordance with Section 130.2(c)4
- ☐ For Building Facade, Ornamental Hardscape and Outdoor Dining lighting, an automatic lighting control in accordance with Section 130.2(c)5
- ☑ Before an occupancy permit is granted for a newly constructed building or area, or a new lighting system serving a building, area, or site is operated for normal use, indoor lighting controls serving the building, area, or site shall be certified as meeting the Acceptance Requirements for Code Compliance in accordance with §130.4.(a). Outdoor lighting controls shall comply with the applicable requirements of Section 130.2(c) and Reference Nonresidential Appendix NA7.8

STATE OF CALIFORNIA
OUTDOOR LIGHTING CONTROLS
CEC-NRCC-LTO-02-E (Revised 05/15)
CALIFORNIA ENERGY COMMISSION

CERTIFICATE OF COMPLIANCE	NRCC-LTO-02-E
Outdoor Lighting Controls	(Page 2 of 3)
Project Name: Morgan Hill Downtown - DEPOT Park	Date Prepared: 8/25/2016

MANDATORY OUTDOOR LIGHTING CONTROL SCHEDULE and FIELD INSPECTION CHECKLIST

Outdoor Lighting Control Schedule			Standards Complying With (✓ all that apply, or enter 'E' if Exempted)						✓ if Acceptance Test Required	Field Inspector	
A	B	C	D	E	F	G	H	I	N	O	
Location and Application of Luminaires being controlled	Type/ Description of Lighting Control (i.e. motion sensor, photocontrol, outdoor astronomical time-switch control, centralized time-based zone lighting control)	# of Units	§130.2(a)	§130.2(c)1	§130.2(c)2	§130.2(c)3	§130.2(c)4	§130.2(c)5		Pass	Fail
DEPOT PARK OUTDOOR	(23) OCCUPANCY SENSOR	5		✓						☐	☐
DEPOT PARK OUTDOOR	(24) PHOTOCELL	5			✓					☐	☐
										☐	☐
										☐	☐
										☐	☐
										☐	☐
										☐	☐
										☐	☐
										☐	☐
										☐	☐
										☐	☐
										☐	☐
										☐	☐
										☐	☐
										☐	☐
										☐	☐
										☐	☐
										☐	☐
										☐	☐
										☐	☐
										☐	☐
										☐	☐

American Consulting Engineers Electrical, Inc.
1590 The Alameda Suite 200
San Jose, CA 95126
408/236-2312
Fax: 408/236-2316
JOB #E16140.00

REGISTERED PROFESSIONAL ENGINEER SAMMY S. FERNANDEZ E16890 Exp. 06/30/17 ELECTRICAL STATE OF CALIFORNIA

NO.	DESCRIPTION	DATE	BY

Revisions

WORK ACCEPTED: INSPECTOR:
BY: DATE:

DRAWN: MG
DESIGN: KC
CHECKED: SF
APPROVED: [signature] DATE: 12/15/16
KARL D. BJARKE– CITY ENGINEER RCE 39416 EXP. 12/31/2017
HOR: N/A
VERT: N/A
JOB NUMBER: 135013

City of Morgan Hill
Public Works Department
CITY OF MORGAN HILL
17575 Peak Ave. Morgan Hill, CA 95037 (408)778-6480, Fax (408)779-7236

DEPOT STREET AND E 4TH STREET, MORGAN HILL, CA 95037

TITLE 24
EXTERIOR LIGHTING - PART 1
DEPOT PARK

FILE NUMBER: 1520400
PRINT DATE: 12/07/16
SHEET NUMBER: E0.2

BID DRAWINGS

STATE OF CALIFORNIA
OUTDOOR LIGHTING CONTROLS
CEC-NRCC-LTO-02-E (Revised 05/15) — CALIFORNIA ENERGY COMMISSION

CERTIFICATE OF COMPLIANCE	NRCC-LTO-02-E
Outdoor Lighting Controls	(Page 3 of 3)
Project Name: Morgan Hill Downtown - DEPOT Park	Date Prepared: 8/25/2016

DOCUMENTATION AUTHOR'S DECLARATION STATEMENT

1. I certify that this Certificate of Compliance documentation is accurate and complete.

Documentation Author Name:	Documentation Author Signature:
Company: American Consulting Engr. Elec., Inc	Signature Date: 8/25/2016
Address:	CEA Certification Identification (if applicable):
City/State/Zip:	Phone:

RESPONSIBLE PERSON'S DECLARATION STATEMENT

I certify the following under penalty of perjury, under the laws of the State of California:

1. The information provided on this Certificate of Compliance is true and correct.
2. I am eligible under Division 3 of the Business and Professions Code to accept responsibility for the building design or system design identified on this Certificate of Compliance (responsible designer).
3. The energy features and performance specifications, materials, components, and manufactured devices for the building design or system design identified on this Certificate of Compliance conform to the requirements of Title 24, Part 1 and Part 6 of the California Code of Regulations.
4. The building design features or system design features identified on this Certificate of Compliance are consistent with the information provided on other applicable compliance documents, worksheets, calculations, plans and specifications submitted to the enforcement agency for approval with this building permit application.
5. I will ensure that a completed signed copy of this Certificate of Compliance shall be made available with the building permit(s) issued for the building, and made available to the enforcement agency for all applicable inspections. I understand that a completed signed copy of this Certificate of Compliance is required to be included with the documentation the builder provides to the building owner at occupancy.

Responsible Designer Name: Sammy S. Fernandez	Responsible Designer Signature:
Company: American Consulting Engineers Electric	Date Signed:
Address: 1590 The Alameda Suite 200	License: E16890
City/State/Zip: San Jose, CA 95126	Phone: 408-236-2312

STATE OF CALIFORNIA
OUTDOOR LIGHTING POWER ALLOWANCES
CEC-NRCC-LTO-03-E (Revised 05/15) — CALIFORNIA ENERGY COMMISSION

CERTIFICATE OF COMPLIANCE	NRCC-LTO-03-E
Outdoor Lighting Power Allowances	(Page 1 of 4)
Project Name: Morgan Hill Downtown - DEPOT Park	Date Prepared: 8/25/2016

A. OUTDOOR LIGHTING POWER ALLOWANCE SUMMARY

1. General Hardscape Lighting Power Allowance (Site Total from Section B of NRCC-LTO-08-E)	1. 1,148
2. Additional Specific "use it or lose it" Lighting Power Allowances listed in each of these cells shall be identical to total allowed watts determined in Section C-1 to C-4 of NRCC-LTO-03-E.	

PER APPLICATION from Section C-1		PER UNIT LENGTH (SALES FRONTAGE) from Section C-2		PER HARDSCAPE AREA (ORNAMENTAL LIGHTING) from Section C-3		PER SPECIFIC AREA from Section C-4.		
0	+	0	+	0	+	0	=	2. 0

3. Sum Total ALLOWED Outdoor Lighting Wattage (add rows 1 and 2)	3. 1,148

B. GENERAL HARDSCAPE LIGHTING POWER ALLOWANCE FROM TABLE 140.7-A

Area Wattage Allowance (AWA)				Linear Wattage Allowance (LWA)			Initial Wattage Allowance (IWA)	Total General Hardscape Lighting Allowance
A	B	C	D	E	F	G	H	I
Name of area	Illuminated Hardscape Area	AWA Per Square Foot	AWA (B x C)	Perimeter Length of General Hardscape	LPA per Linear Foot	LWA (E x F)	IWA (Watts)	D + G + H
Pathway LTG	1,603	0.090	144	390	0.600	234	770	1,148
							TOTAL	1,148

STATE OF CALIFORNIA
OUTDOOR LIGHTING POWER ALLOWANCES
CEC-NRCC-LTO-03-E (Revised 05/15) — CALIFORNIA ENERGY COMMISSION

CERTIFICATE OF COMPLIANCE	NRCC-LTO-03-E
Outdoor Lighting Power Allowances	(Page 2 of 4)
Project Name: Morgan Hill Downtown - DEPOT Park	Date Prepared: 8/25/2016

C. ADDITIONAL "USE IT OR LOSE IT" OUTDOOR LIGHTING POWER ALLOWANCES FOR SPECIFIC APPLICATIONS

☐ The additional specific outdoor lighting power allowance shall be the smaller of the allowed lighting power or the actual lighting power used.
☐ Use Outdoor Lighting Zone (OLZ) that is documented on page 1 of NRCC-LTO-01-E to calculate the specific wattage allowances.

C-1. WATTAGE ALLOWANCE PER APPLICATION – Table 140.7-B

☐ Available only for qualifying locations, which include Building Entrances or Exits; Primary Entrances to Senior Care Facilities, Police Stations, Hospitals, Fire Stations, and Emergency Vehicle Facilities; Drive Up Windows; Vehicle Service Station Uncovered Fuel Dispenser
☐ If more than one luminaire type is used per location, use multiple rows for that location

A	B	C	D	E	F	G	H	I	J
	ALLOTTED WATTS			DESIGN WATTS					
Name of Location for which allowance is claimed	Number of qualifying locations	Wattage Allowance per qualifying location	Allotted Watts (B x C)	Luminaire Code or Symbol	Luminaire Description	Luminaire Quantity	Watts per luminaire	Design Watts (G x H)	Allowed Watts (smaller of D or I)
							Sum total allowance per application on this site:		0

C-2. WATTAGE ALLOWANCE PER UNIT LENGTH (Sales Frontage) from Table 140.7-B

☐ If more than one luminaire type is used per location, use multiple rows for that location

A	B	C	D	E	F	G	H	I	J
	ALLOTTED WATTS			DESIGN WATTS					
Name of Location for which allowance is claimed	Linear feet of Sales Frontage	Wattage Allowance per linear foot	Allotted Watts (B x C)	Luminaire Code or Symbol	Luminaire Description	Luminaire Quantity	Watts per luminaire	Design Watts (G x H)	Allowed Watts (smaller of D or I)
							Sum total allowance for sales frontage on the site:		0

STATE OF CALIFORNIA
OUTDOOR LIGHTING POWER ALLOWANCES
CEC-NRCC-LTO-03-E (Revised 05/15) — CALIFORNIA ENERGY COMMISSION

CERTIFICATE OF COMPLIANCE	NRCC-LTO-03-E
Outdoor Lighting Power Allowances	(Page 3 of 4)
Project Name: Morgan Hill Downtown - DEPOT Park	Date Prepared: 8/25/2016

C-3. WATTAGE ALLOWANCE PER SQUARE FOOT OF HARDSCAPE AREA (Ornamental Lighting) – Table 140.7-B

☐ Allowance for the total site illuminated hardscape area. Luminaires qualifying for this allowance shall be rated for 100 watts or less as determined in accordance with Section 130.0(c), and shall be post-top luminaires, lanterns, pendant luminaires, or chandeliers.
☐ If more than one luminaire type is used per location, use multiple rows for that location

A	B	C	D	E	F	G	H	I	J
	ALLOTTED WATTS			DESIGN WATTS					
Name of area for which ornamental allowance is claimed	Square feet of Hardscape	Wattage Allowance per square foot	Allotted Watts (B x C)	Luminaire Code or Symbol	Luminaire Description	Luminaire Quantity	Watts per luminaire	Design Watts (G x H)	Allowed Watts (smaller of D or I)
							Sum total allowance for ornamental lighting on the site:		0

C-4. WATTAGE ALLOWANCE PER SQUARE FOOT OF SPECIFIC AREA - Table 140.7-B

☐ Allowances for Building Facades; Outdoor Sales Lots; Vehicle Service Station Hardscape; Vehicle Service Station Canopies; Sales Canopies; Non-sales Canopies; Guard Stations; Student Pick-up/Drop-off zone; Outdoor Dining; Special Security Lighting for Retail Parking and Pedestrian Hardscape.
☐ If more than one luminaire type is used per location, use multiple rows for that location

A	B	C	D	E	F	G	H	I	J
	ALLOTTED WATTS			DESIGN WATTS					
Name of Location for which allowance is claimed	Illuminated Area of Application	Wattage Allowance per square foot	Allotted Watts (B x C)	Luminaire Code or Symbol	Luminaire Description	Luminaire Quantity	Watts per luminaire	Design Watts (G x H)	Allowed Watts (smaller of D or I)
							Sum total allowance for specific area on the site:		0

STATE OF CALIFORNIA
OUTDOOR LIGHTING POWER ALLOWANCES
CEC-NRCC-LTO-03-E (Revised 05/15) — CALIFORNIA ENERGY COMMISSION

CERTIFICATE OF COMPLIANCE	NRCC-LTO-03-E
Outdoor Lighting Power Allowances	(Page 4 of 4)
Project Name: Morgan Hill Downtown - Little LLagas Creek Park	Date Prepared: 8/24/2016

DOCUMENTATION AUTHOR'S DECLARATION STATEMENT

1. I certify that this Certificate of Compliance documentation is accurate and complete.

Documentation Author Name:	Documentation Author Signature:
Company: American Consulting Engr. Elec., Inc	Signature Date: 8/24/2016
Address:	CEA Certification Identification (if applicable):
City/State/Zip:	Phone:

RESPONSIBLE PERSON'S DECLARATION STATEMENT

I certify the following under penalty of perjury, under the laws of the State of California:

1. The information provided on this Certificate of Compliance is true and correct.
2. I am eligible under Division 3 of the Business and Professions Code to accept responsibility for the building design or system design identified on this Certificate of Compliance (responsible designer).
3. The energy features and performance specifications, materials, components, and manufactured devices for the building design or system design identified on this Certificate of Compliance conform to the requirements of Title 24, Part 1 and Part 6 of the California Code of Regulations.
4. The building design features or system design features identified on this Certificate of Compliance are consistent with the information provided on other applicable compliance documents, worksheets, calculations, plans and specifications submitted to the enforcement agency for approval with this building permit application.
5. I will ensure that a completed signed copy of this Certificate of Compliance shall be made available with the building permit(s) issued for the building, and made available to the enforcement agency for all applicable inspections. I understand that a completed signed copy of this Certificate of Compliance is required to be included with the documentation the builder provides to the building owner at occupancy.

Responsible Designer Name: Sammy S. Fernandez	Responsible Designer Signature:
Company: American Consulting Engineers Electrical, Inc.	Date Signed:
Address: 1590 The Alameda Suite 200	License: E 16890
City/State/Zip: San Jose, CA 95126	Phone: 408-236-2312

American Consulting Engineers
Electrical, Inc.
1590 The Alameda Suite 200
San Jose, CA 95126
JOB #E16140.00
408/236-2312
Fax: 408/236-2316

REGISTERED PROFESSIONAL ENGINEER — SAMMY S. FERNANDEZ — E16890 — Exp. 06/30/17 — ELECTRICAL — STATE OF CALIFORNIA

NO.	DESCRIPTION	DATE	BY

Revisions

WORK ACCEPTED: | INSPECTOR: | BY: | DATE:

DRAWN: MG | DESIGN: KC | HOR: N/A
CHECKED: SF | VERT: N/A
APPROVED: | DATE: 12/15/16 | JOB NUMBER: 135013
KARL D. BJARKE - CITY ENGINEER
RCE 39416 EXP. 12/31/2017

City of Morgan Hill
Public Works Department
CITY OF MORGAN HILL
17575 Peak Ave. Morgan Hill, CA 95037 (408)778-6480, Fax (408)779-7236

DEPOT STREET AND
E 4TH STREET,
MORGAN HILL,
CA 95037

TITLE 24
EXTERIOR LIGHTING - PART 2
DEPOT PARK

FILE NUMBER: 1520400
PRINT DATE: 12/07/16
SHEET NUMBER: E0.3

BID DRAWINGS

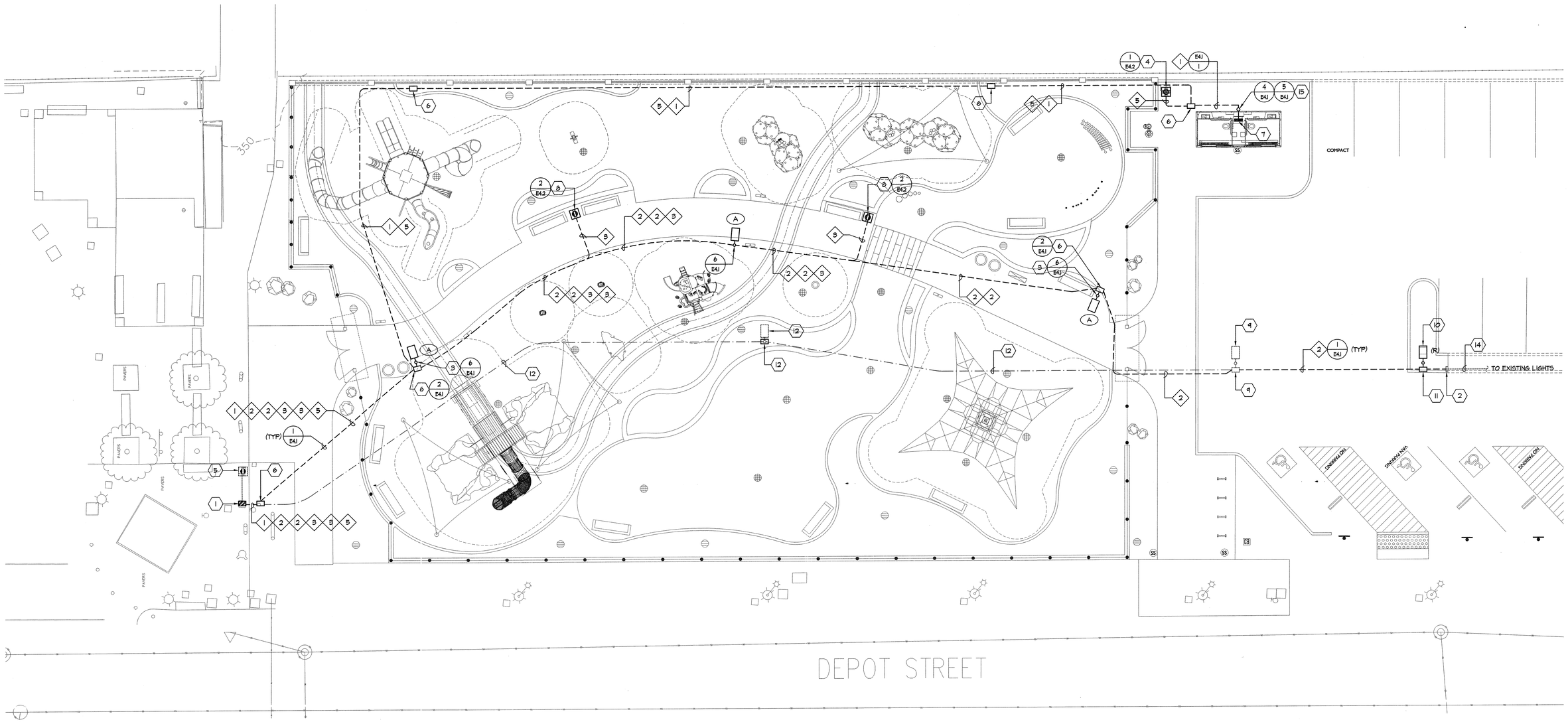

1 ELECTRICAL LIGHTING SITE PLAN

E1.1

SCALE: 1" = 10'-0"

GENERAL NOTES:

1. SEE SINGLE LINE DIAGRAM FOR POWER CABLE REQUIREMENTS. ALL CABLES ARE DESIGNED AND SIZED FOR VOLTAGE DROPS.
2. CONTRACTOR SHALL DO HAND DIG WHEN THE TRENCHING IS CLOSE TO THE EXISTING TREES.
3. SEE CIVIL DRAWINGS FOR EXACT LIGHT FIXTURE LOCATION.
4. PROVIDE TRAFFIC RATED LID FOR ALL PULL BOXES.
5. ELECTRICAL CONTRACTOR SHALL COORDINATE NEW CONDUITS WITH ALL OTHER UTILITY AND STRUCTURAL FOOTING.

SHEET NOTES:

1. EXISTING PEDESTAL METER PANEL. 100A, 120/208V, 3-PHASE. CONTRACTOR TO STUB (N) CONDUIT INTO PANEL AS-REQUIRED.
2. CONTRACTOR TO PROVIDE NEW CABLES, MATCH EXISTING, AND RECONNECT/ RESTORE POWER TO EXISTING LIGHT POLES TO REMAIN.
3. NEW SECURITY CAMERA MOUNTED ON LIGHT POLE AT 15 FT. A.F.F. SEE E1.2 & RISER DIAGRAM FOR ADDITIONAL REQUIREMENT.
4. NEW FLOOR-MOUNTED NEMA-3R ENCLOSURE WITH BUILT-IN FAN FOR NEW IDF & NEW IRRIGATION CONTROLLER.
5. (E) IRRIGATION CONTROLLER.
6. NEW ELECTRICAL PULL BOX. LABEL LID "POWER".
7. RESTROOM MODULAR PANEL.
8. NEW PEDESTAL RECEPTACLES.
9. EXISTING LIGHT FIXTURE & LIGHT POLE TO BE REMOVED AND PROTECT DURING CONSTRUCTION AND REINSTALL AT NEW LOCATION SHOWN. PROVIDE NEW PULL BOX AT EXISTING LIGHT POLE LOCATION, INTERCEPT (E) POWER CONDUIT & BRANCH CIRCUIT AND EXTEND WITH NEW CABLES TO NEW LIGHT LOCATION.
10. INSTALL/ RELOCATE LIGHT FIXTURE & POLE. PROVIDE (N) CONDUIT & CABLE AS REQUIRED TO CONNECT POWER. THE CONTRACTOR TO PROVIDE ALL MATERIAL AS REQUIRED TO RELOCATE LIGHT FIXTURE.
11. PROVIDE (N) N4 PULL BOX.
12. EXISTING LIGHT FIXTURE / LIGHT POLE, CONDUIT TO BE REMOVED.
13. NOT USED.
14. CONTRACTOR TO LOCATE EXISTING LIGHTING, CONDUIT. EXTEND WITH NEW TO NEW PULL BOX AS REQUIRED.
15. COORDINATE WITH RESTROOM INSTALLER FOR POWER CONDUIT INSTALLATION.

CONDUIT SCHEDULE:

1. NEW 1-1/2"C - RESTROOM.
2. NEW 1-1/4"C - POWER (LIGHTING).
3. NEW 1"C - POWER (RECEPTACLE).
4. NEW 1-1/4"C - POWER (IRRIGATION).
5. NEW 1-1/4"C - POWER (IDF).

American Consulting Engineers
Electrical, Inc.
1590 The Alameda Suite 200
San Jose, CA 95126
JOB #E16140.00
408/236-2312
Fax: 408/236-2318

LICENSED PROFESSIONAL ENGINEER
TIMOTHY S. FERRIER
E16030
Exp. 06/30/17
ELECTRICAL
STATE OF CALIFORNIA

NO.	DESCRIPTION	DATE	BY

Revisions

WORK ACCEPTED: INSPECTOR:
BY: DATE:

DRAWN: MG
DESIGN: KC
CHECKED: SF
HOR: N/A
VERT: N/A
APPROVED: KD Bjarke
DATE: 12/15/16
JOB NUMBER: 135013
KARL D. BJARKE - CITY ENGINEER
RCE 39416 EXP. 12/31/2017

CITY OF MORGAN HILL
City of Morgan Hill
Public Works Department
17575 Peak Ave. Morgan Hill, CA 95037 (408)778-6480, Fax (408)779-7236

DEPOT STREET AND
E 4TH STREET,
MORGAN HILL,
CA 95037

ELECTRICAL LIGHTING SITE PLAN
DEPOT PARK

FILE NUMBER: 1520400
PRINT DATE: 12/07/16
SHEET NUMBER: E1.1

BID DRAWINGS

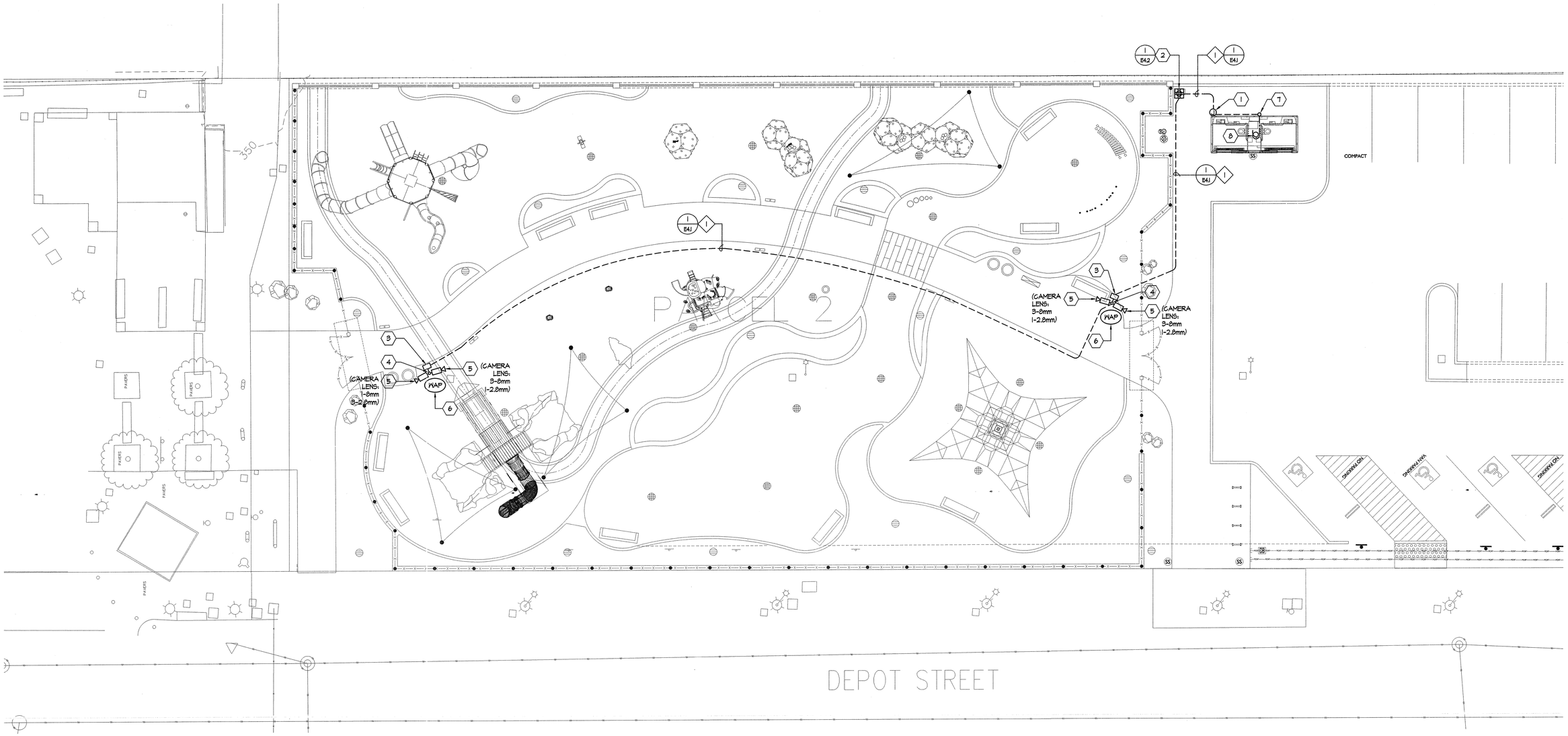

1 / E1.2 WIRELESS ACCESS POINT & SECURITY CAMERA SITE PLAN

SCALE: 1" = 10'-0"

GENERAL NOTES:

1. SEE DATA/ SECURITY CAMERA RISER DIAGRAM FOR ADDITIONAL REQUIREMENT.
2. PROVIDE TRAFFIC RATED LID FOR ALL PULL BOXES.

SHEET NOTES:

1. NEW AIRAYA WIRELESS GRID 300 MOUNTED ON TOP OF RESTROOM UNIT. PROVIDE UNISTRUT AS REQUIRED TO MOUNT UNIT AT LEAST 3 FEET ABOUT RESTROOM ROOF. PRIOR TO INSTALL WIRELESS GRID, THE CONTRACTOR TO COORDINATE WITH THE CITY FOR ANTENNA ALIGNING & REQUIREMENT.
2. NEMA 3R ENCLOSURE SHOWN ON E1.1 TO HOUSE DATA, SECURITY EQUIPMENT AND IRRIGATION CONTROLLER. SEE DETAIL 6 DATA/ SECURITY RISER FOR REQUIREMENT.
3. NEW N4 PULL BOX. LABEL AS "SIGNAL". STUB NEW 1" CONDUIT FROM SIGNAL PULL BOX INTO LIGHT POLE SIGNAL COMPARTMENT.
4. 20' HIGH LIGHT POLE. SEE E1.1 FOR INSTALLATION REQUIREMENT.
5. NEW SECURITY CAMERA MOUNTED AT 15' ON LIGHT POLE.
6. NEW WIRELESS ACCESS POINT (WAP) MOUNTED ON TOP OF LIGHT POLE.
7. PROVIDE NEW 1" CONDUIT, SURFACE MOUNT TO THE RESTROOM UNIT AND STUB CONDUIT INTO UTILITY ROOM. COORDINATE WITH MODULAR UNIT MANUFACTURER ON CONDUIT INSTALLATION PRIOR TO STUB CONDUIT INTO RESTROOM UTILITY ROOM.
8. NEW INDOOR / OUTDOOR CAT-6 CABLE FROM SWITCH TO RESTROOM'S UTILITY ROOM. COIL 10' OF CAT-6 CABLE IN UTILITY ROOM. COORDINATE WITH RESTROOM MANUFACTURER AND CITY IT ON CONNECTION AND CONNECT AS REQUIRED.

CONDUIT SCHEDULE:

1. NEW 4" CONDUIT - SIGNAL.

American Consulting Engineers Electrical, Inc.
1590 The Alameda Suite 200
San Jose, CA 95126
JOB #E16140.00
408/236-2312
Fax: 408/236-2316

REGISTERED PROFESSIONAL ENGINEER — DANNY S. FERNANDEZ — E16890 — Exp. 06/30/17 — ELECTRICAL — STATE OF CALIFORNIA

NO.	DESCRIPTION	DATE	BY

Revisions

WORK ACCEPTED: INSPECTOR:
BY: DATE:

DRAWN: MG | DESIGN: KC | HOR: N/A
CHECKED: SF | VERT: N/A
APPROVED: K. Bjarke | DATE: 12/15/16 | JOB NUMBER: 135013
KARL D. BJARKE- CITY ENGINEER
RCE 39416 EXP. 12/31/2017

City of Morgan Hill
Public Works Department
CITY OF MORGAN HILL
17575 Peak Ave. Morgan Hill, CA 95037 (408)778-6480, Fax (408)779-7236

DEPOT STREET AND E 4TH STREET, MORGAN HILL, CA 95037

WIRELESS ACCESS POINT & SECURITY CAMERA SITE PLAN
DEPOT PARK

FILE NUMBER: 1520400
PRINT DATE: 12/07/16
SHEET NUMBER: E1.2

BID DRAWINGS

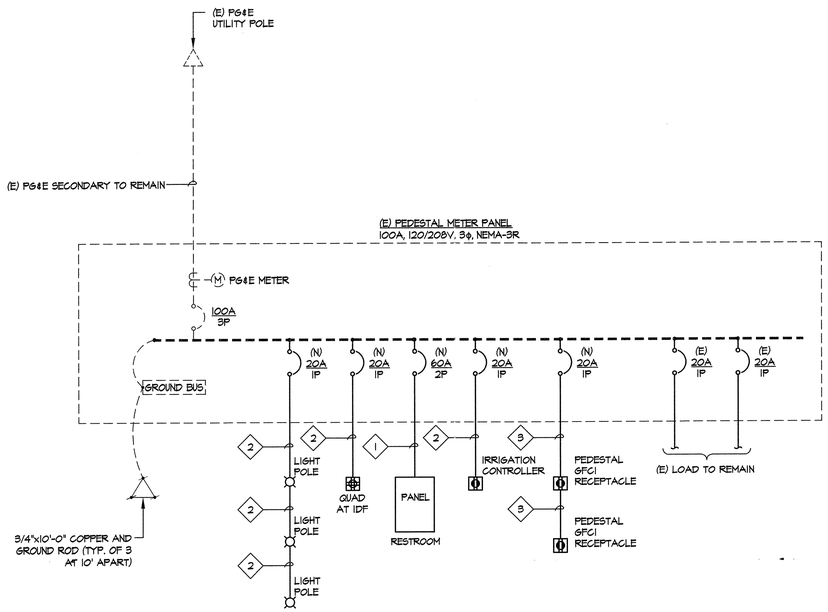

1 E2.1 **SINGLE LINE DIAGRAM**

SCALE: NOT TO SCALE

GENERAL NOTES:

1. THE CONTRACTOR SHALL SUBMIT (N) PEDESTAL METER PANEL TO PG&E FOR REVIEW. THE CONTRACTOR SHALL OBTAIN A WRITTEN APPROVAL OF THE (N) PEDESTAL METER PANEL PRIOR TO ORDERING OF THE (N) PEDESTAL METER PANEL.
2. PRIOR TO ANY PG&E RELATED WORK, THE CONTRACTOR SHALL OBTAIN THE PG&E SUBSTRUCTURE PACKAGE FIRST. THE CONTRACTOR SHALL INCLUDE IN THEIR BID ALL REQUIREMENTS TO COMPLETE THE PRIMARY AND SECONDARY CABLE CONNECTIONS.

FEEDER SCHEDULE:

1. NEW 1 1/2"C - (3) #6 + (1) #8 CU GND
2. NEW 1 1/4"C - (3) #2
3. NEW 1"C - (3) #4

(E) 100A PEDESTAL METER PANEL, 120/208V, 3 PHASE SYSTEM LOAD CALCULATIONS FOR DEPOT PARK

DESCRIPTION	LOAD TYPE(KVA)				Demand
	MODULAR	Pwr Load @ 100%	Motor Load @ 100%	Lighting Load @ 100%	(KVA)
POLE LED LIGHTS				1.0	1.0
IRRIGATION CONTROL		1.0			1.0
SECURITY CAMERA		1.0			1.0
RESTROOM MODULAR	12				12.0
	TOTAL DEMAND KVA				15.0
	TOTAL DEMAND AMPS @ 100% (208V)				41.7
	TOTAL DEMAND AMPS @ 120% (208V)				50.0

American Consulting Engineers Electrical, Inc.
1590 The Alameda Suite 200
San Jose, CA 95126
JOB #E16140.00
408/236-2312
Fax: 408/236-2316

REGISTERED PROFESSIONAL ENGINEER
SAMMY S. FERNANDEZ
E16890
Exp. 06/30/17
ELECTRICAL
STATE OF CALIFORNIA

NO.	DESCRIPTION	DATE	BY

Revisions

WORK ACCEPTED: INSPECTOR:
BY: DATE:

DRAWN: MG DESIGN: KC HOR: N/A
CHECKED: SF VERT: N/A
APPROVED: DATE: 12/15/16 JOB NUMBER: 135013
KARL D. BAUMKE - CITY ENGINEER
RCE 39416 EXP. 12/31/2017

City of Morgan Hill
Public Works Department
CITY OF MORGAN HILL
17575 Peak Ave. Morgan Hill, CA 95037 (408)778-6480, Fax (408)779-7236

DEPOT STREET AND E 4TH STREET, MORGAN HILL, CA 95037

SINGLE LINE DIAGRAM

DEPOT PARK

FILE NUMBER: 1520400
PRINT DATE: 12/07/16
SHEET NUMBER: E2.1

BID DRAWINGS

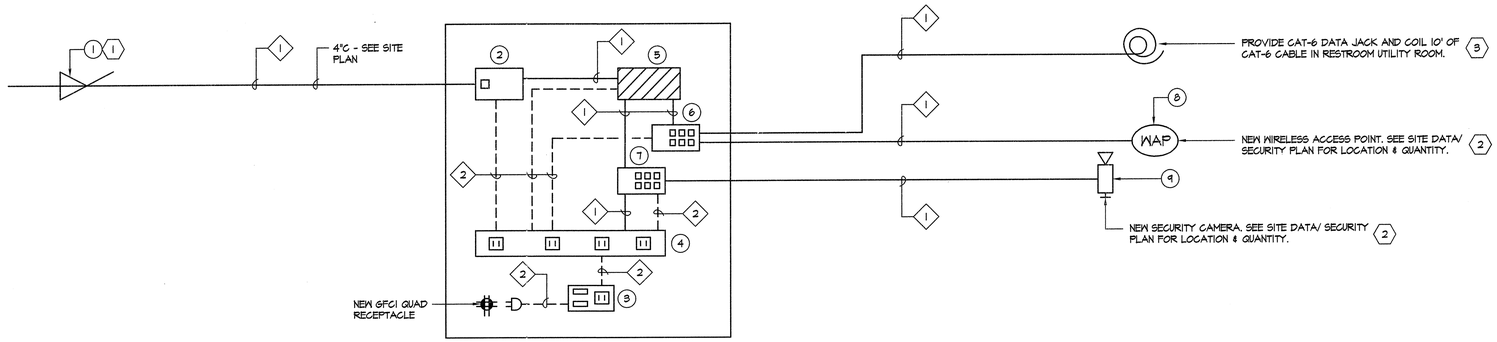

1 / E2.2 **DATA & SECURITY CAMERA RISER DIAGRAM**

N.T.S.

RISER GENERAL NOTES

1. ALL DATA/TELEPHONE CABLES SHALL INSTALL IN CONDUIT AND/OR J-HOOKS FROM EACH PORT, DATA/TELEPHONE LOCATION WHERE SHOWN ON PLANS TO THE NEAREST DESIGNATED IDF LOCATION, U.O.N. MAKE TERMINATIONS AT BOTH DATA OUTLET AND IDF LOCATION.
2. ALL CABLE SHALL BE ROUTE DIRECTLY FROM STATION TO IDF/MDF LOCATION WITHOUT SPLICE OR INTERRUPTION.
3. ALL CAT 6 CABLES ARE TO BE TESTED FOR COMPLIANCE WITH TRUE CAT 6 PERFORMANCE, USING A HAND HELD NETWORK SCANNER. HARD COPY AND SOFT COPY RESULTS ARE TO BE PROVIDED FOR ALL JACKS TESTED. NETWORK ANALYZER IS TO BE A FLUKE DSP 4500 OR OWNER APPROVED EQUIVALENT. SOFT COPY RESULTS TO BE PROVIDE ON A WINDOW XP OR LATER COMPACT DISK (CD).
4. ALL FIBER OPTIC CABLE RUNS WILL BE TESTED AND DOCUMENTATION PROVIDED TO SHOW THAT EACH STRAND MEETS OR EXCEEDS THE EIA/TIA-455 STANDARDS. PROVIDE RECORDED TEST RESULTS ON ALL CABLES PASSED FOR OWNER'S RECORDS. CONTRACTOR WILL TEST THE FIBER OPTIC CABLE PRIOR TO INSTALLATION TO CHECK FOR DEFECTS. IF THE CONTRACTOR DOES NOT TEST THE FIBER, AND DEFECTS ARE FOUND THAT REQUIRE THE CABLE TO BE REPLACED, THE CONTRACTOR IS RESPONSIBLE FOR THE CABLE. CONTRACTOR WILL TEST THE INSTALLED FIBER OPTIC CABLES AND DOCUMENT EACH STRAND'S RESULT. IF ANY STRANDS ARE FOUND TO BE OUT SPECIFICATION, THE CONTRACTOR WILL REPAIR THE STRANDS TERMINATION AS NEEDED OR REPLACE CABLE IF REQUIRED. THE CONTRACTOR WILL RETEST AFTER REPAIRS.
5. SEE DATA SPECIFICATIONS FOR ADDITIONAL REQUIREMENTS.

SHEET NOTES:

1. CONTRACTOR SHALL COORDINATE FINAL ANTENNA LOCATION AND CONNECTION WITH CITY IT PRIOR TO INSTALLATION.
2. ALL WIRELESS ACCESS POINT (WAP) AND SECURITY CAMERA ARE ESTIMATED TO BE LESS THAN 280 FEET FROM IDF. IF ACTUAL ON-SITE DISTANCE BETWEEN WAP/CAMERA AND IDF IS GREATER THAN 280 FEET, THE CONTRACTOR IS TO INFORM THE CITY IT AND DESIGN TEAM OF THE ACTUAL DISTANCE PRIOR TO INSTALL OF THE WAP/CAMERA.
3. CONTRACTOR SHALL COORDINATE RESTROOM MONITORING CONNECTION WITH CITY IT AND RESTROOM INSTALLER PRIOR TO INSTALLATION.

EQUIPMENT SCHEDULE:

1. OUTDOOR WIRELESS ANTENNA - AIRAYA WIRELESS GRID 300
2. OUTDOOR WIRELESS ANTENNA - AIRAYA WIRELESS GRID 300 - POWER INJECTOR.
3. SURGE PROTECTOR - TRIPP LITE ISOBAR-4-ULTRA WITH 6 FT. POWER CORD.
4. POWER DISTRIBUTION UNIT - TRIPP LITE PDUMH15NET2 WITH 12 FT. POWER CORD.
5. GATEWAY - SONIC WALL TZ300.
6. WIRELESS ACCESS PORT POE SWITCH - PLANET IGS-4215-4P4T2S/ PWR-120-48.
7. SECURITY CAMERA POE SWITCH - PLANET IGS-4215-4P4T2S/ PWR-120-48.
8. WIRELESS ACCESS POINT - AEROHIVE AP1130.
9. SECURITY CAMERA - ARECONT AVI2275 DN-NL. SEE SECURITY SITE PLAN FOR CAMERA LENS REQUIREMENT.

CABLE SCHEDULE:

1. DATA - CAT-6 (INDOOR/ OUTDOOR RATED).
2. POWER CORD, PROVIDED WITH THE EQUIPMENT.

American Consulting Engineers Electrical, Inc.
1590 The Alameda Suite 200
San Jose, CA 95126
408/236-2312
Fax: 408/236-2316
JOB #E16140.00

REGISTERED PROFESSIONAL ENGINEER JAMY S. FERNANDO E16890 Exp. 06/30/17 ELECTRICAL STATE OF CALIFORNIA

NO.	DESCRIPTION	DATE	BY

Revisions

WORK ACCEPTED: INSPECTOR:
BY: DATE:

DRAWN: MG | DESIGN: KC | HOR: N/A
CHECKED: SF | VERT: N/A
APPROVED: K.Burke | DATE: 12/15/16 | JOB NUMBER: 135013
KARL D. BURKE- CITY ENGINEER
RCE 39416 EXP. 12/31/2017

CITY OF MORGAN HILL
City of Morgan Hill
Public Works Department
17575 Peak Ave. Morgan Hill, CA 95037 (408)778-6480, Fax (408)779-7236

DEPOT STREET AND E 4TH STREET, MORGAN HILL, CA 95037

DATA & SECURITY CAMERA RISER DIAGRAM

DEPOT PARK

FILE NUMBER: 1520400
PRINT DATE: 12/07/16
SHEET NUMBER: E2.2

BID DRAWINGS

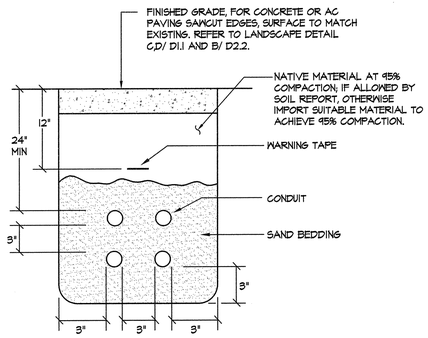

1. COORDINATE TRENCH CONDUIT LAYOUT WITH OTHER CONDUIT SYSTEMS.

1 TYPICAL TRENCH DETAIL

E4.1 SCALE: NOT TO SCALE

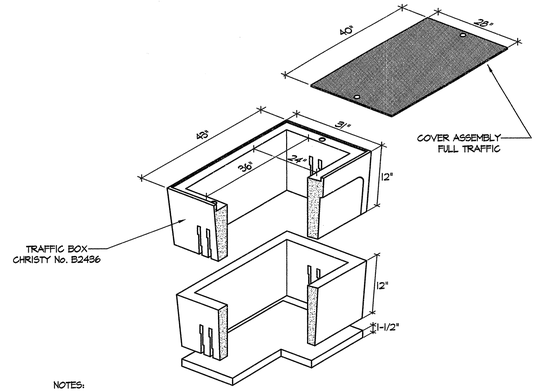

NOTES:

1. HIGH DENSITY REINFORCED CONCRETE BOX WITH NON-SETTING SHOULDERS POSITIONED TO MAINTAIN GRADE AND FACILITATE BACK FILLING. APPROXIMATE DIMENSIONS SHOWN.
2. ALL CONDUITS SHALL ENTER FROM SIDES OF PULL BOX. CONTRACTOR SHALL PROVIDE PULL BOX EXTENSION AS REQUIRED. NO CONDUITS SHALL BE ALLOWED FROM THE BOTTOM OF THE PULL BOX.
3. CONTRACTOR SHALL STACK CONDUITS AS REQUIRED TO MEET THE NEC CODE REQUIREMENTS.
4. PROVIDE BELL ENDS ON ALL CONDUIT.
5. PROVIDE 6" CONCRETE SLURRY AROUND BOX.
6. ALL PENETRATIONS INTO BOXES SHALL BE SEALED WITH GROUT.

2 B2436 ELECTRICAL VAULT

E4.1 NOT TO SCALE (FULL TRAFFIC COVER)

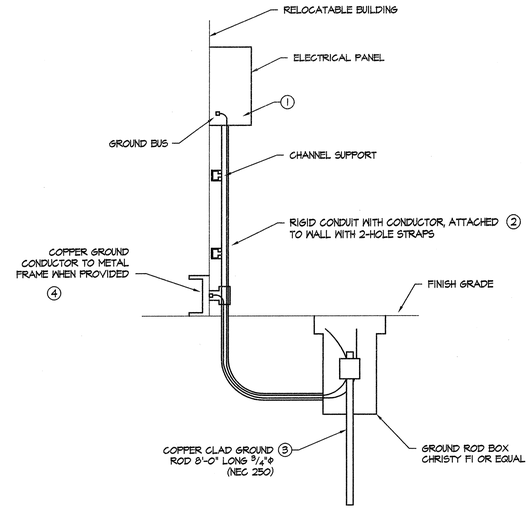

1. SIZE OF CONDUCTORS SHALL COMPLY WITH NEC TABLE 250-66
2. BOND SEPARATE CONDUCTORS FROM GROUND ROD TO ELECTRICAL PANEL AND TO METAL BUILDING FRAME (NEC 250-50). IN ADDITION TO DETAIL ABOVE, BOND THE ELECTRICAL GROUND TO NEAREST METALLIC COLD WATER PIPE. (NEC 250-50)
3. CHECK RESISTANCE TO GROUND, IF RESISTANCE EXCEEDS 25 OHMS, INSTALL ADDITIONAL GROUND RODS AS REQUIRED. (NEC 250-56)
4. ALL MODULES OF METAL FRAME BUILDINGS SHALL BE ELECTRICALLY BONDED TOGETHER. (BOLTING ONLY IS NOT ACCEPTABLE BONDING.)

3 TYPICAL GROUND INSTALLATION

E4.1 SCALE: NOT TO SCALE

NOTE: GROUNDING TEST MUST BE BY INDEPENDENT LICENSED ELECTRICAL CONTRACTOR OR TESTING LABORATORY. PROJECT CONTRACTOR IS NOT ELIGIBLE TO RUN TEST.

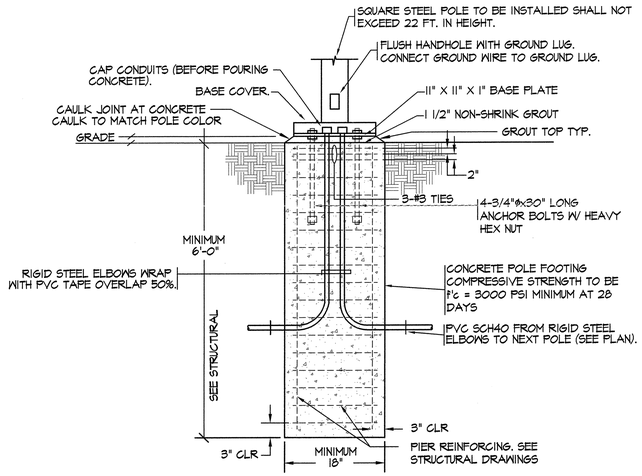

4 FLUSHED POLE BASE DETAIL

E4.1 NOT TO SCALE

American Consulting Engineers Electrical, Inc.
1590 The Alameda Suite 200
San Jose, CA 95126
JOB #E16140.00
408/236-2312
Fax: 408/236-2316

REGISTERED PROFESSIONAL ENGINEER SAMUEL S. FENTON E-18690 Exp. 06/30/17 ELECTRICAL STATE OF CALIFORNIA

NO.	DESCRIPTION	DATE	BY

Revisions

WORK ACCEPTED: INSPECTOR:
BY: DATE:

DRAWN: MG
DESIGN: KC
CHECKED: SF
APPROVED: K. Bjaber
DATE: 12/15/16
KARL D. BJABER - CITY ENGINEER RCE 39416 EXP. 12/31/2017

HOR: N/A
VERT: N/A
JOB NUMBER: 135013

CITY OF MORGAN HILL
City of Morgan Hill
Public Works Department
17575 Peak Ave. Morgan Hill, CA 95037 (408)778-6480, Fax (408)779-7236

DEPOT STREET AND E 4TH STREET, MORGAN HILL, CA 95037

ELECTRICAL DETAILS
DEPOT PARK

FILE NUMBER: 1520400
PRINT DATE: 12/07/16
SHEET NUMBER: E4.1

BID DRAWINGS

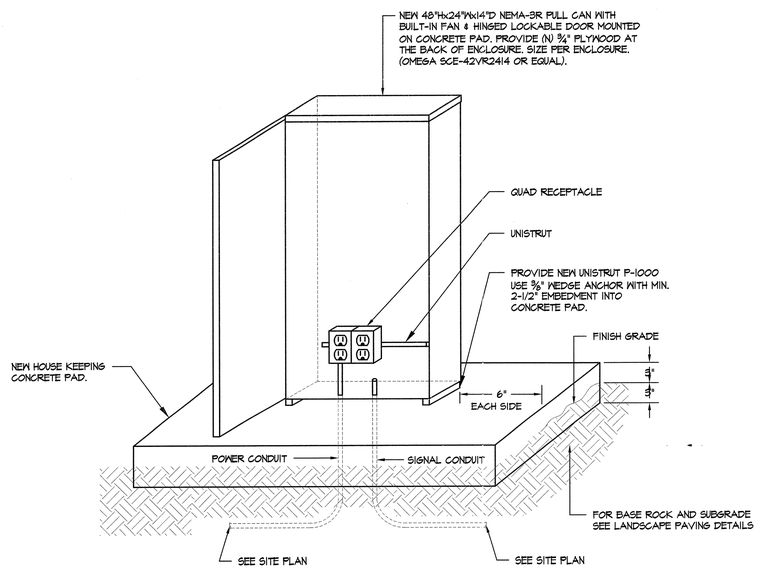

NEMA-3R POWER VENTED OUTDOOR IDF ENCLOSURE MOUNTED ON CONCRETE PAD

1 / E4.2

SCALE: NOT TO SCALE

NOTE:

1. COMPACT BACKFILL MATERIAL AROUND CONCRETE PEDESTAL TO 95% OF MAXIMUM DRAY INTENSITY
2. REFER TO SITE PLAN FOR CONDUIT SIZE AND QUANTITY.
3. CONDUIT SIZE VARIES. REFER TO SITE PLAN FOR SPECIFIC LOCATION AND SIZE.

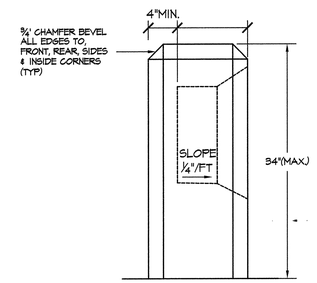

SIDE VIEW

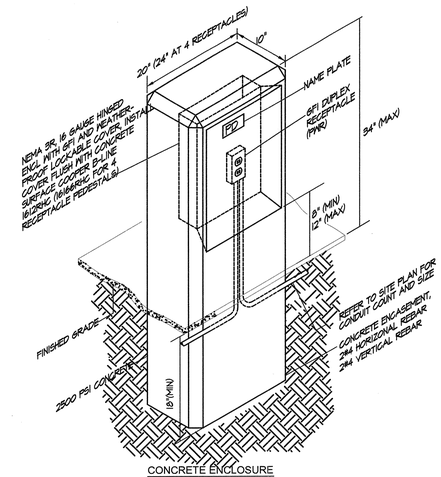

CONCRETE ENCLOSURE

OUTDOOR PEDESTAL GFCI RECEPTACLE DETAIL

2 / E4.2

SCALE: NOT TO SCALE

American Consulting Engineers Electrical, Inc.
1590 The Alameda Suite 200
San Jose, CA 95126
408/236-2312
Fax: 408/236-2316
JOB #E16140.00

REGISTERED PROFESSIONAL ENGINEER JAMES S. FERNANDEZ No. E16890 Exp. 06/30/17 ELECTRICAL STATE OF CALIFORNIA

NO.	DESCRIPTION	DATE	BY

Revisions

WORK ACCEPTED: INSPECTOR:
BY: DATE:

DRAWN: MG | DESIGN: KC | HOR: N/A
CHECKED: SF | VERT: N/A
APPROVED: DATE: 12/5/16 | JOB NUMBER: 135013
KARL D. BURKE- CITY ENGINEER
RCE 39416 EXP. 12/31/2017

City of Morgan Hill
Public Works Department
CITY OF MORGAN HILL
17575 Peak Ave. Morgan Hill, CA 95037 (408)778-6480, Fax (408)779-7236

DEPOT STREET AND E 4TH STREET, MORGAN HILL, CA 95037

ELECTRICAL DETAILS
DEPOT PARK

FILE NUMBER: 1520400
PRINT DATE: 12/07/16
SHEET NUMBER: E4.2

BID DRAWINGS

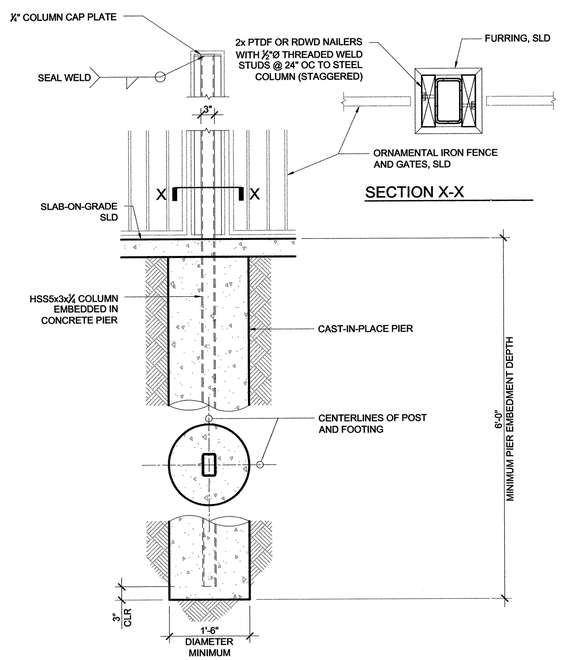

ENTRY ARBOR PIER FOOTING

SCALE: 3/4" = 1'-0"

3

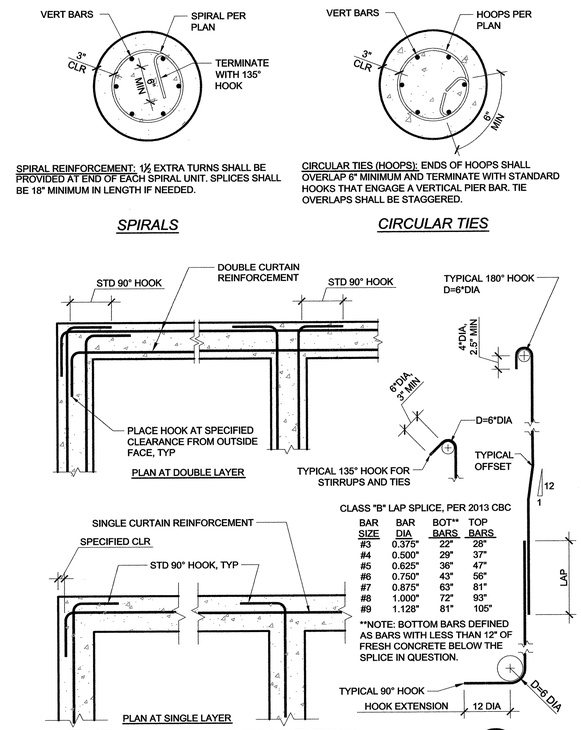

TYP REINF - CONCRETE

SCALE: NTS

2

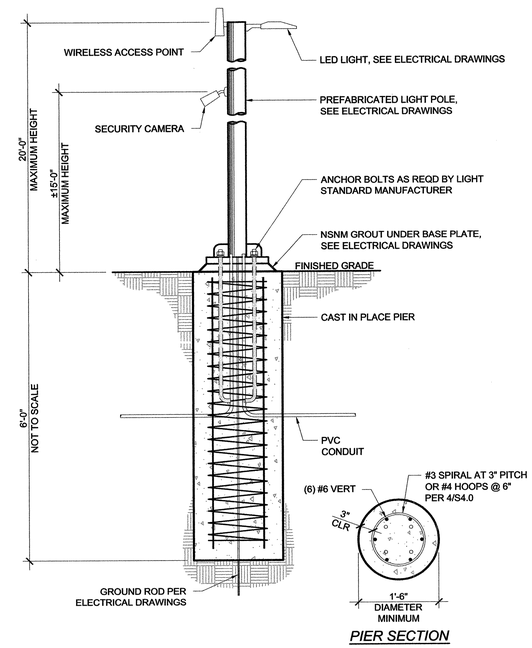

SECURITY CAMERA PIER FOOTING

SCALE: 3/4" = 1'-0"

1

NO.	DESCRIPTION	DATE	BY

Revisions

WORK ACCEPTED: INSPECTOR:
BY: DATE:

DRAWN: PD/ED DESIGN: PD/ED
CHECKED: DH
APPROVED: DATE: 12/15/16
KARL D. BRAUN - CITY ENGINEER RCE 39416 EXP.12/31/2017

HOR: AS NOTED
VERT: AS NOTED
JOB NUMBER: 15245

CITY OF MORGAN HILL
City of Morgan Hill
Public Works Department
17575 Peak Ave. Morgan Hill, CA 95037 (408)778-6480, Fax (408)779-7236

Mesiti-Miller Engineering, Inc.
Civil and Structural Engineering
831-426-3186 www.mme.com

DEPOT STREET AND E 4TH STREET, MORGAN HILL, CA 95037

PIER FOUNDATION DETAILS
DEPOT PARK

FILE NUMBER: 1520400
PRINT DATE: 12/8/16
SHEET NUMBER: S1.0

REGISTERED PROFESSIONAL ENGINEER DAVID A. HENDSELL No. 42949 STRUCTURAL STATE OF CALIFORNIA

BID DRAWINGS

SECTION A-A

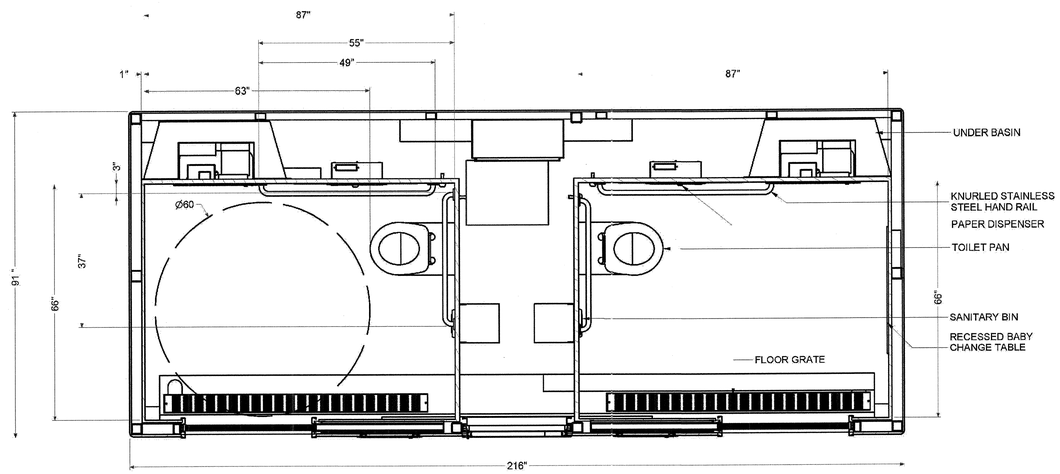

FRONT VIEW

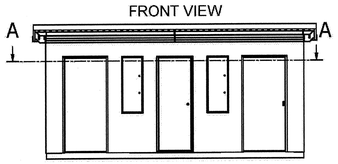

exeLOO 26 Paramount Dve Henderson Tel (09) 838-8912 PO Box 33-256 Takapuna Auckland, New Zealand Fax (09) 838-8913

Description: JUPITER 22/32 US MAIN ASSEMBLY	Proj:	Units: in	Rev: 1-H	Rev Date: 12/07/2016	
	Tolerance: +/-0.5	Scale: N.T.S.	Checked by:	Approved by:	
Material:	Finish: REF	Drawn by: JSC	Creation Date: 16/04/2012	Sheet No. 3 / 6	Drawing No: ASJUP22DD-US1SAW

DO NOT SCALE - IF IN DOUBT ASK PROJECT: SPECIFICATION SUBJECT TO CHANGE WITHOUT NOTICE

SECTION B-B

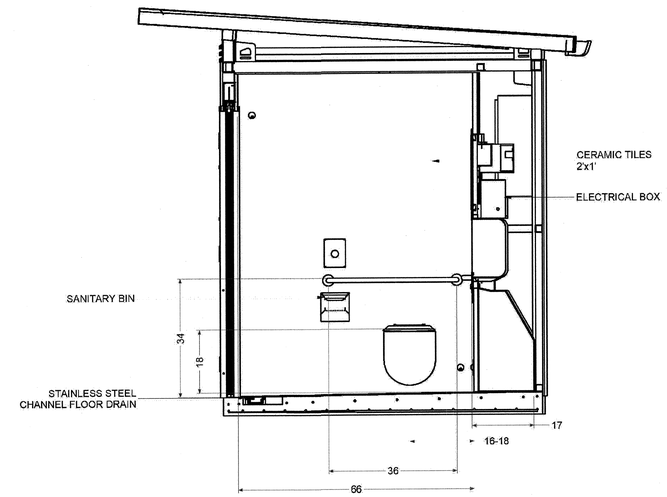

TOP VIEW

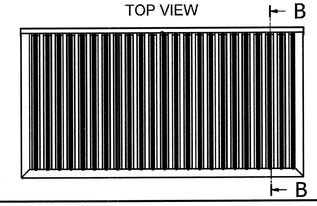

exeLOO 26 Paramount Dve Henderson Tel (09) 838-8912 PO Box 33-256 Takapuna Auckland, New Zealand Fax (09) 838-8913

Description: JUPITER 22/32 US MAIN ASSEMBLY	Proj:	Units: in	Rev: 1-H	Rev Date: 12/07/2016	
	Tolerance: +/-0.5	Scale: N.T.S.	Checked by:	Approved by:	
Material:	Finish: REF	Drawn by: JSC	Creation Date: 16/04/2012	Sheet No. 4 / 6	Drawing No: ASJUP22DD-US1SAW

DO NOT SCALE - IF IN DOUBT ASK PROJECT: SPECIFICATION SUBJECT TO CHANGE WITHOUT NOTICE

SECTION C-C

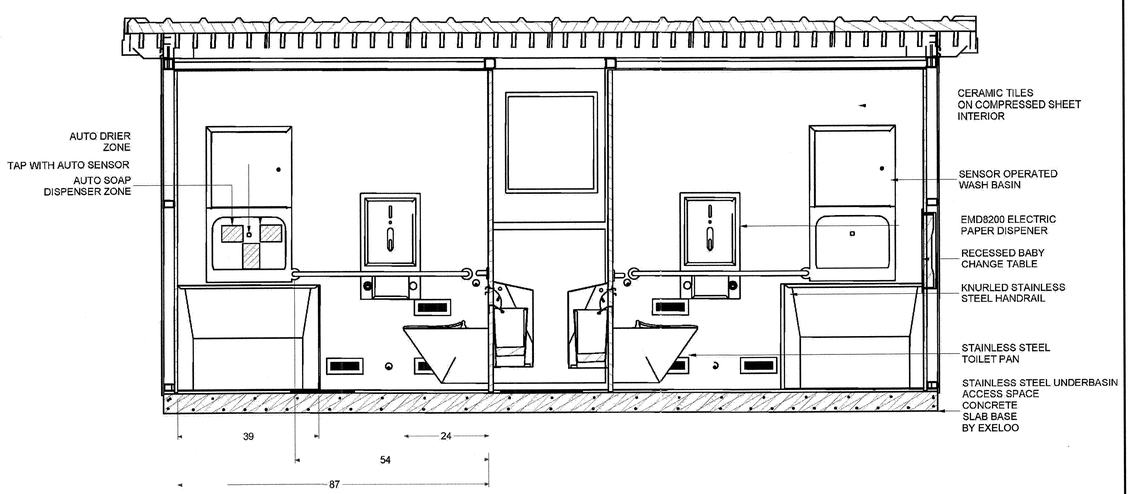

TOP VIEW

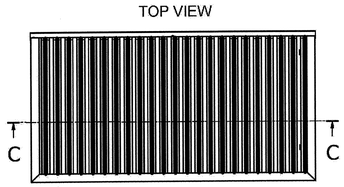

exeLOO 26 Paramount Dve Henderson Tel (09) 838-8912 PO Box 33-256 Takapuna Auckland, New Zealand Fax (09) 838-8913

Description: JUPITER 22/32 US MAIN ASSEMBLY	Proj:	Units: in	Rev: 1-H	Rev Date: 12/07/2016	
	Tolerance: +/-0.5	Scale: N.T.S.	Checked by:	Approved by:	
Material:	Finish: REF	Drawn by: JSC	Creation Date: 16/04/2012	Sheet No. 5 / 6	Drawing No: ASJUP22DD-US1SAW

DO NOT SCALE - IF IN DOUBT ASK PROJECT: SPECIFICATION SUBJECT TO CHANGE WITHOUT NOTICE

SERVICES PLAN

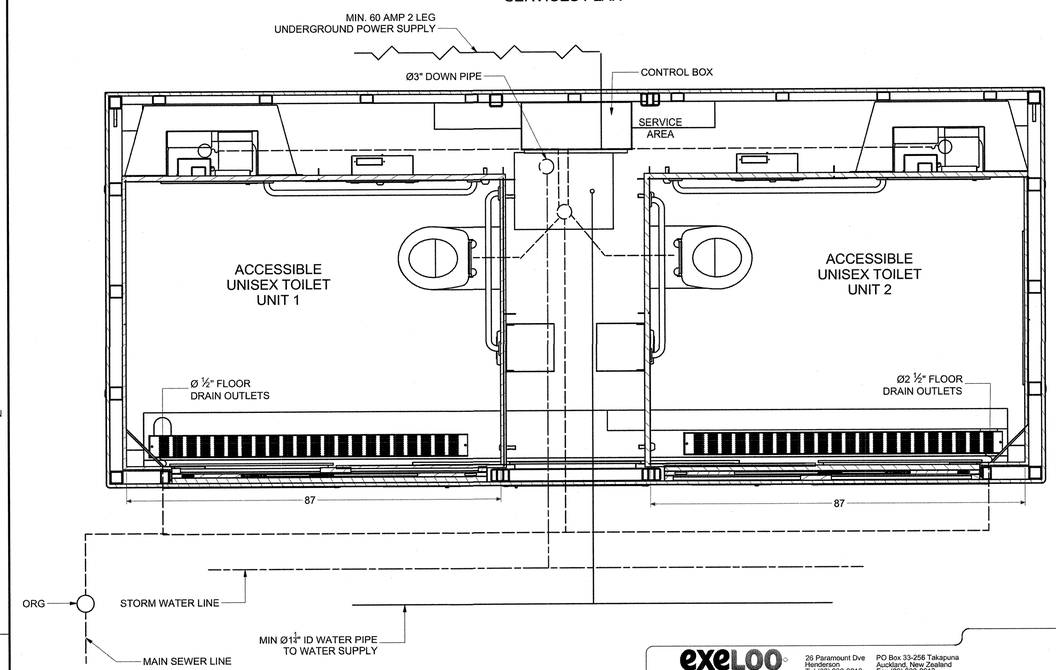

Exeloo Ltd does not guarantee that information shown on these drawings indicate any more than the presence or absence of such services and will not accept liability for any damage or losses caused to any party, by the actions of the Contractor or its agents and subcontractors. The Contractor is required to make its own investigations, contact all service providers and verify the type and location of all services prior to commencement of any construction work on site.

exeLOO 26 Paramount Dve Henderson Tel (09) 838-8912 PO Box 33-256 Takapuna Auckland, New Zealand Fax (09) 838-8913

Description: JUPITER 22/32 US MAIN ASSEMBLY	Proj:	Units: in	Rev: 1-H	Rev Date: 12/07/2016	
	Tolerance: +/-0.5	Scale: N.T.S.	Checked by:	Approved by:	
Material:	Finish: REF	Drawn by: JSC	Creation Date: 16/04/2012	Sheet No. 6 / 6	Drawing No: ASJUP22DD-US1SAW

DO NOT SCALE - IF IN DOUBT ASK PROJECT: SPECIFICATION SUBJECT TO CHANGE WITHOUT NOTICE

NO.	DESCRIPTION	DATE	BY

Revisions

WORK ACCEPTED: INSPECTOR:

BY: DATE:

DRAWN: DESIGN: HOR: N/A

CHECKED: VERT: N/A

APPROVED: DATE: 12/15/16 JOB NUMBER: 135013

KARL D. CLARKE– CITY ENGINEER RCE 39418, EXP. 12/31/2017

CITY OF MORGAN HILL

City of Morgan Hill
Public Works Department

17575 Peak Ave. Morgan Hill, CA 95037 (408)778–6480, Fax (408)779–7236

DEPOT STREET AND E 4TH STREET, MORGAN HILL, CA 95037

RESTROOM AND FOUNDATION DETAIL
DEPOT PARK

FILE NUMBER: 1520400

PRINT DATE: 12/07/16

SHEET NUMBER: R4.1

BID ALTERNATE NO.1

MAIN VIEW

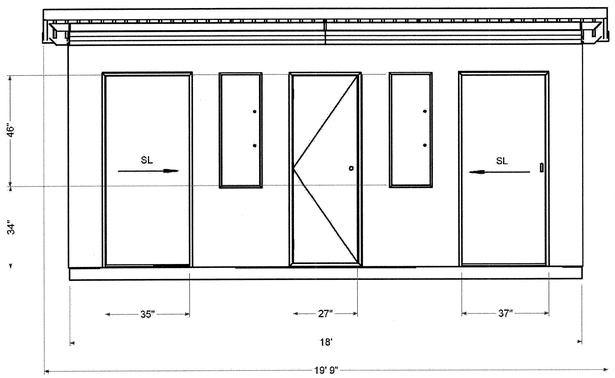

R-H VIEW

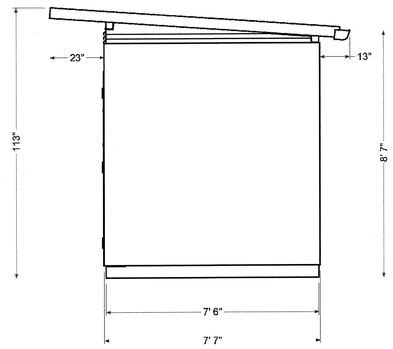

exeLOO

26 Paramount Dve
Henderson
Tel (09) 838-8912

PO Box 33-256 Takapuna
Auckland, New Zealand
Fax (09) 838-8913

Description: JUPITER 22/32 US MAIN ASSEMBLY	Proj:	Units: in	Rev: 1-H	Rev Date: 12/07/2016	
	Tolerance: +/-0.5	Scale: N.T.S.	Checked by:	Approved by:	
Mode list:	Finish: REF	Drawn by: JSC	Creation Date: 16/04/2012	Sheet No: 2 / 6	Drawing No: ASJUP22DD-US1SAW

DO NOT SCALE - IF IN DOUBT ASK PROJECT: SPECIFICATION SUBJECT TO CHANGE WITHOUT NOTICE

STRUCTURE	FIXTURES	ELECTRONIC CONTROL
FRAME - Galvanised steel.	SOAP DISPENSER, BASIN, HAND DRYER – Exeloo recessed stainless steel sensor operated basin unit incorporating soap dispenser, water outlet and hand dryer.	This system carries out the following functions: 1. Provides an easy to use touch screen to adjust settings. 2. Provides an interface to monitor the toilet operation by remote PC, if selected. 3. Locks the unit up at night and opens again in the morning at selected times. 4. Washes the toilet unit down on a regular basis with disinfectant and water sprays. 5. Controls a fixed occupation time alarm to discourage loitering. 6. Provides a wide range of statistical information on toilet usage. 7. Controls an illuminated outside instruction panel. 8. Controls the flushing of the pan automatically when hands are washed or when a user leaves the toilet. 9. Controls the automatic door operation with an electric drive unit. 10. Provides a wide range of voice messages to assist users and background music.
FLOOR - 120mm precast reinforced concrete.		
ROOF – 75mm thick colorsteel foam core flat panels.	TOILET TISSUE DISPENSER – Exeloo stainless steel electronic toilet tissue dispenser.	
CEILINGS - Nil.	TOILET PAN – Stainless steel toilet pan with closed front toilet seat.	
DOORS – Stainless steel panel door in a Cavity Slider unit.	FLUSHING UNIT – Concealed mains pressure automatic flushing valve.	
EXTERIOR WALL SURFACE – Compressed fibre cement sheeting with epoxy paint finish.	LIGHTING – Surface mounted, vandal resistant LED lighting.	
INTERIOR WALL LININGS - Flooring grade white ceramic tiles with epoxy grout.	MIRROR – 1200 x 400 stainless steel.	
FLOOR SURFACE – Slip resistant flooring grade charcoal coloured ceramic tiles with epoxy grout.	HAND RAILS – 32mm stainless steel hand rails.	
VENTILATION – Large louvered ventilation gap around top of walls. Extract fan available if ventilation is not achievable.	EXTERNAL INFORMATION PANEL – Stainless steel panels with anodised aluminium tactile and Braille signage.	
	DOOR – Electric operation.	
	LOCKING – Electric locking with touch free buttons.	

NO.	DESCRIPTION	DATE	BY

Revisions

WORK ACCEPTED: INSPECTOR:
BY: DATE:

DRAWN: DESIGN: HOR: N/A
CHECKED: VERT: N/A
APPROVED: DATE: 12/15/16 JOB NUMBER: 135013
KARL D. BJARKE CITY ENGINEER RCE 39416 EXP. 12/31/2017

City of Morgan Hill
Public Works Department
CITY OF MORGAN HILL
17575 Peak Ave. Morgan Hill, CA 95037 (408)778-6480, Fax (408)779-7236

DEPOT STREET AND
E 4TH STREET,
MORGAN HILL,
CA 95037

RESTROOM AND FOUNDATION DETAIL
DEPOT PARK

FILE NUMBER: 1520400
PRINT DATE: 12/07/16
SHEET NUMBER: R4.2

BID ALTERNATE NO.1

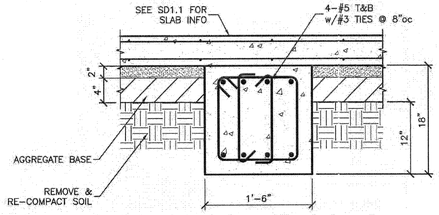

NOTE:
1. THE SUBGRADE (BELOW THE AGGREGATE BASE) SHOULD BE SCARIFIED TO A DEPTH OF ABOUT 12 INCHES, MOISTURE CONDITIONED TO AT LEAST 3 PERCENT ABOVE OPTIMUM MOISTURE CONTENT, AND RE-COMPACTED TO AT LEAST 90 PERCENT RELATIVE COMPACTION PER ASTM D-1557.
2. THE BOTTOM OF THE FOOTING EXCAVATION SHOULD BE COMPACTED WITH A JUMPING JACK COMPACTOR WITH AT LEAST 4 PASSES.
3. THE SLAB SHOULD BE UNDERLAIN BY 2 INCHES A MASON SAND (ASTM C-144) COMPACTED WITH A VIBRATORY PLATE OVER A MINIMUM 4 INCHES OF CLASS 2 AGGREGATE BASE COMPACTED TO AT LEAST 95 PERCENT RELATIVE COMPACTION.

FOOTING @ SLAB (1)

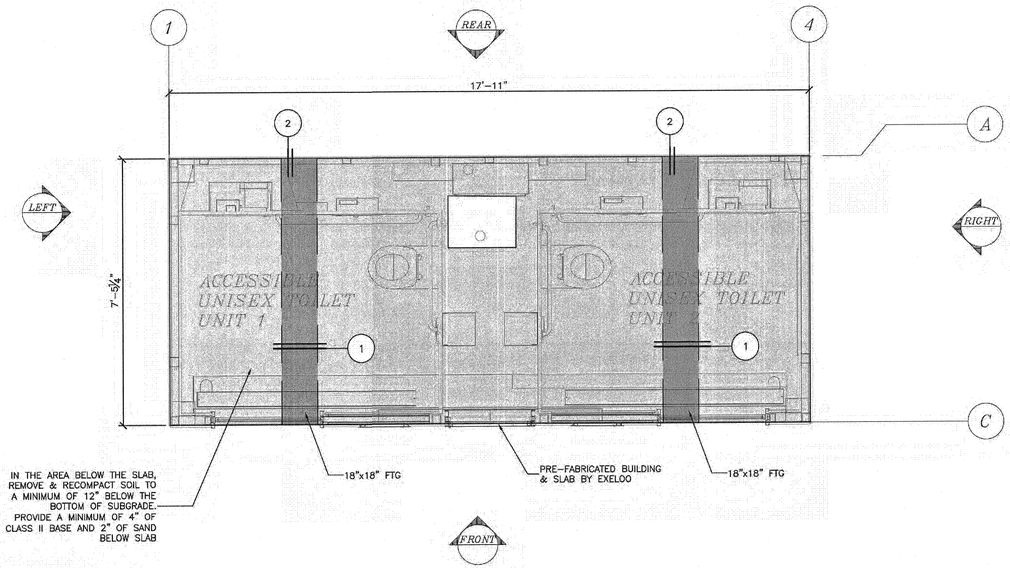

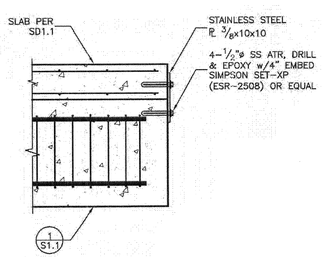

SLAB TO FTG TIE (2)

DETAIL & NOTES SHEET SCHEDULE

SPECIAL INSPECTION NOTES	S0.1
GENERAL NOTES	S0.2
1 TO 20 REFER TO SHEET	S1.1
101 TO 120 REFER TO SHEET	SD1.1

MATERIAL LOADS ROOF	(psf)
Total Dead Load	10
Total Live Load	20

THE MATERIAL SPECIFIED IS NOT NECESSARILY THE MATERIAL TO BE USED. ONLY TO VERIFY THE MAXIMUM LOAD THE STRUCTURE IS DESIGNED FOR. REFER TO ARCHITECTURAL OR THE STRUCTURAL PLANS FOR THE EXACT MATERIAL CALLED FOR.
CONTRACTOR SHALL VERIFY THE DEAD LOAD WEIGHTS AS NOTED ON SHEET S0.1

FRAMING LEGEND

(SIZE & TYPE) / (BEAM #)	BEAM (SEE PLANS AND BEAM SCHED)
▼	VERTICAL STRAP
⟋ ⟋	FRAMING DIRECTION
●	HOLDOWN

FOUNDATION PLAN

SCALE: 1/2"=1'-0" 3" 6" 1'-0" 2'-0" 4'-0"

DO NOT SCALE FROM DRAWING REFER TO NOTES, SCHEDULES AND DETAILS.

SOILS INFORMATION:
Soils Report prepared by:

Steven K. Tsang
Lai & Associates
(925) 639-3836 Phone
Fax
paulslai11@gmail.com
4400 Market Street
Oakland, CA 94608

Dated: **5/9/2016**
For footing review contact the above Soils Engineer.
For more soils information refer to general notes

FOOTING NOTES:
a. Footing Widths:
12" (min.) at 1 story

Footing Depths:
1'-6" exterior below final adjacent grade, UNO
1'-0" below pad grade
Footing Bearing Pressure
1500psf w/Dead & Live Load
2000psf w/Seismic Load
a. Unless otherwise detailed or noted on plans.
b. Match existing footing depth, unless new depth is greater (where applicable).
c. Refer to the Structural General Notes and project specification for additional material quality control and workmanship requirements.
d. Maintain bottom of footing such that the horizontal distance to daylight is and per Sec 1808.7.2 of current CBC edition.

NOT FOR CONSTRUCTION
AN IN-HOUSE BACK CHECK HAS NOT BEEN COMPLETED AND BLDG. DEPT. REVISIONS HAVE NOT BEEN ADDED TO THESE PLANS. THE ENGINEER AND THE ARCHITECT ASSUME NO RESPONSIBILITY FOR CONSTRUCTION BIDS TAKEN FROM THESE PLANS.

NO.	DESCRIPTION	DATE	BY
	PRELIM SET #01 OUT	11-15-16	
	PRELIM SET #02 OUT	11-16-16	

Revisions

WORK ACCEPTED: INSPECTOR:
BY: DATE:

DRAWN: SDS
DESIGN:
CHECKED:
APPROVED: K.Bya
DATE: 12/15/16
KARL D. BJARE - CITY ENGINEER
RCE 39416 EXP. 12/31/2017

HOR: N/A
VERT: N/A
JOB NUMBER: 135013

CITY OF MORGAN HILL
City of Morgan Hill
Public Works Department
17575 Peak Ave. Morgan Hill, CA 95037 (408)778-6480, Fax (408)779-7236

exeloo® the complete public restroom solution

HUME ENGINEERS
P.O. Box 15238 San Luis Obispo, Ca. 93406
Phone: (805) 942-6311 Fax: (805) 781-9476
e-mail: mail@hengineers.com SB Phone: 962-6311
www.hengineers.com

SDS Structural Design Solutions

DEPOT STREET AND E 4TH STREET, MORGAN HILL, CA 95037

FOUNDATION & ROOF PLAN
DEPOT PARK

FILE NUMBER: 16 049
PRINT DATE: 12/07/16
SHEET NUMBER: RS2.1

BID ALTERNATE NO.1

PAGE ---- OF 06

O:\Jobs Active\16 049 Morgan Hill_Exeloo\16 049 Dwg's Version 11.0\16 049 S2 FOUNDATION & ROOF PLAN.dwg, 11/16/2016 10:02:27 AM, JesseP

At W. 3rd Street and Del Monte Avenue, Borings B-4 and B-5 generally encountered stiff sandy clay with gravel and very dense clayey sand to the maximum depth explored, about 4½ feet below the existing ground surface. In Boring B-4, highly weathered, friable greenstone was encountered at a depth of about 4 feet below the existing ground surface.

Adjacent to the existing access road from the intersection of W. 3rd Street and Del Monte Avenue to the water tank, Borings B-6 through B-11 generally encountered stiff sandy clay to the maximum depth explored, about 5 feet below the existing ground surface. Highly weathered, friable greenstone was encountered in Borings B-6 and B-7 at depths of about 4 feet and 1 foot, respectively, below the existing ground surface.

At the hillside area (near the proposed overlook stop), Boring B-12 generally encountered about 1 foot of medium stiff sandy clay over dense to very dense clayey sand. Boring B-12 was drilled using a hand auger and refusal was encountered at a depth of about 3½ feet below the existing ground surface, which was the maximum depth explored.

Groundwater was not encountered in Borings B-4 through B-12. It should be anticipated that the actual groundwater level may fluctuate depending on factors such as seasonal rainfall, time of the year and local irrigation.

Based on our review of the 2005 Parikh report, the previous borings (C-4 and C-5) drilled at Depot Street between E. 3rd Street and E. 5th Street generally encountered reddish brown lean clay with trace sand. Groundwater was not encountered in their borings.

The above is a general description of soil, bedrock and groundwater conditions encountered at the site. For a more detailed description of the soil, bedrock and groundwater conditions encountered, please see our boring logs included on Plates 3 through 17 and the previous boring logs (Parikh 2005) included in Appendix A.

CONCLUSIONS AND RECOMMENDATIONS

GENERAL

We conclude that, from a geotechnical engineering standpoint, the Morgan Hill Downtown Park Project can generally be constructed as planned, provided that the conclusions and recommendations contained in this report are incorporated into the design and construction of the project.

EXPANSIVE SOILS

As indicated by the results of Atterberg limits tests presented in the "Field Exploration and Laboratory Testing" Section, the on-site soils generally have low to moderate expansion potential and the greenstone generally has low expansion potential. Typically, expansive soils are sensitive to moisture changes. To reduce the potential impacts of swelling and shrinkage of the expansive soils to the proposed improvements, special measures should be performed. We anticipated that the special measures would include the following:

1. Conditioning the expansive soils to higher moisture content during site preparation and grading.
2. Conditioning the subgrade soils in the concrete flatwork areas to higher moisture content immediately prior to the placement of aggregate base.

3. Providing surface drainage away from structure foundations.

BEDROCK RIPPABILITY

As noted above, greenstone bedrock was encountered in Borings B-4, B-6 and B-7 at depths of about 4, 3 and 1 feet, respectively, below the existing ground surface. At the time of this report, no grading plans are available to indicate the depths of proposed cuts and utility trenches. Based on the bedrock conditions encountered in Borings B-4, B-6 and B-7 that were drilled using a truck-mounted drill auger rig to depths of about 4 to 4½ feet, it appears that it would generally be feasible to rip most of the shallow bedrock materials with heavy-duty grading equipment. However, it is possible that the bedrock at some locations, especially at greater depths, could be very difficult to excavate. Bedrock rippability may become a construction issue if significant re-grading of site and/or deep trenching is planned. When the grading plans are available, additional field exploration including test pit excavations may be required to further investigate the bedrock rippability.

SITE PREPARATION AND GRADING

Our general site preparation and grading recommendations are as follows:

1. The areas to be graded should be cleared of debris, significant surface vegetation and obstructions including abandoned underground pipes, foundations and concrete slabs. Stripping should be stockpiled and may be reused in landscaping areas.
2. The root system of the removed trees should be removed. The removal of the tree roots could disturb up to about 18 to 30 inches of the soils. If these disturbed soils are not being removed by design cuts, the disturbed soils should be over-excavated and replaced with engineered fill.
3. If zones of soft or saturated soils are encountered during excavation and compaction, deeper excavations may be required to expose firm soils. This should be determined in the field by the project geotechnical engineer.
4. In areas where engineered fill is planned, the subgrade should be scarified to a depth of about 12 inches, moisture conditioned to at least 4 percent above optimum moisture content; and re-compacted to at least 90 percent relative compaction.

   Relative compaction refers to the in-place dry density of soil expressed as a percentage of the maximum dry density determined by ASTM D1557 compaction test procedure. Optimum moisture is the water content (percentage by dry weight) corresponding to the maximum dry density.
5. The on-site soils are generally suitable for engineered fill provided they are clean of debris, significant vegetation, rock greater than 4 inches in largest dimension and other deleterious matter. Import fill material should contain no deleterious matter and rock greater than 4 inches in largest dimension, and have low expansion potential (Plasticity Index less than 15). All fill materials (on-site soils and import fill material) should be subject to the evaluation by this office prior to their use. We suggest that the import fill material be checked for toxic or hazardous materials prior to importing.

6. All fill and backfill should be placed in thin lifts (normally 6 to 8 inches depending on the compaction equipment), properly moisture conditioned to at least 4 percent above optimum moisture content and compacted to at least 90 percent relative compaction.
7. Observations and soil density tests should be carried out during grading and backfill operations to assist the contractor in obtaining the required degree of compaction and proper moisture content. Where the compaction is outside the range required, additional compactive effort should be made and adjustment of moisture content until the specified compaction and moisture conditioning is achieved.
8. The project geotechnical engineer should be notified at least 48 hours prior to any grading and backfill operations. The procedure and methods of grading may then be discussed between the contractor and the project geotechnical engineer.

CUT AND FILL SLOPES

Cut and fill slopes may be required for the project. In general, cut and fill slopes should be constructed at gradients no steeper than 3H:1V. For cut and fill slopes that are 10 feet or less in height, the slopes can be constructed at gradients no steeper than 2H:1V.

The stability of fill slopes depends on proper keyways, benching, fill compaction and slope gradients. Where fill slopes abut against existing slopes, horizontal benches should be excavated back into firm material during slope construction. In general, fill slopes should be constructed with a minimum 10 feet wide bench key at the bottom. The bench key should be excavated at least 2 feet into competent material at the toe and be sloped back at least 5 percent.

For fill slopes that are more than 7 feet in height, subdrains should be installed along the upslope side of the bench key. Subdrains should consist of 4-inch diameter perforated PVC pipes (SDR 35) with perforation facing down and a wedge of Class 2 Permeable Material, as defined in Section 68-2.02F(3) of Caltrans Standard Specifications (2015). The perforated pipes should be placed near the bottom and upslope edge of the bench key, and be surrounded and underlain by at least 6 cubic feet/foot of Permeable Material. Subdrains should discharge via a solid pipe to the nearby storm drain system or suitable outlet.

EROSION PROTECTION

The graded slopes (cut and fill slopes) should be protected from erosion, especially during the first winter season after grading. We recommend that fast growing vegetation be planted prior to the first winter to reduce erosion. The landscaping plan may limit the type of vegetation planted to species not necessarily best suited for erosion protection. Consideration should be given to use of erosion control mats to protect slopes during the first winter if the landscaping planting will not provide adequate protection.

As mentioned in the "Site Conditions" section, shallow spalling and reveling of the weathered and fractured bedrock were noted at some locations on the slopes above and below the access road to the water tank. Erosion protection such as revegetation of the slopes and/or the use of erosion control mats should be considered in those areas. Also, Surface drainage is one of the key factors in erosion protection. With this in mind, the designers need to consider ways of preventing water from flowing over the slopes.

SITE RETAINING WALLS

Relatively low site retaining walls may be required for the project. It is our opinion that cast-in-place concrete or masonry block retaining walls can be supported on footing foundations founded on compacted engineered fill or firm on-site soils. We recommend that the following geotechnical criteria be incorporated in the design of these retaining walls:

Active Equivalent Fluid Pressure Level Backfill Sloped Backfill	 45 pcf 55 pcf
Traffic Load	Where applicable, the addition of traffic surcharge load equivalent to 2 feet of soils over the road surface can be considered.
Allowable Bearing Capacity (may be increased by one-third for seismic and/or wind loads)	2,500 psf
Passive Equivalent Fluid Pressure (neglect the upper 1 foot if the ground surface is not confined by slabs or pavement and upper 3 feet for sloping ground)	300 pcf
Base Friction Coefficient	0.3
Minimum Footing Depth (below the lowest adjacent grade)	18 inches
Minimum Footing Width	18 inches

The above recommended lateral pressures are based on drained condition and backfill, and do not include any surcharges (other than traffic loads shown above). Therefore, the designer should include the appropriate surcharge loads to the retaining wall design.

To reduce hydrostatic pressure build-up, the retaining walls should be provided with permanent backdrains. The backdrain should consist of a blanket of Class 2 Permeable Material and a 4-inch diameter perforated PVC pipe (SDR 35). The permeable material blanket should be at least 12 inches thick and should be placed from the base of the retaining wall to about 1 foot below the finished grade behind the retaining wall. Alternatively, a geo-composite drain, such as Miradrain 6200 or approved equivalent, may be used in lieu of the Class 2 Permeable Material blanket. The perforated pipe should be placed near the bottom of the wall to carry collected water to a suitable gravity discharge. Backdrains are not required for retaining walls of 2 feet or less in height.

If modular block retaining wall is used for the site retaining walls, we recommend that the following additional geotechnical criteria be incorporated in the retaining wall design:

Reinforced Fill Unit Weight Friction Angle Cohesion	 125 pcf 32 degrees 0 psf
Retained Fill Unit Weight Friction Angle Cohesion	 125 pcf 32 degrees 0 psf
Foundation Materials Unit Weight Friction Angle Cohesion	 125 pcf 32 degrees 0 psf

If geo-grid reinforced retaining wall more than 6 feet high is required, the permeable material blanket should be placed behind the geo-grid and in conformance with the general retaining wall backdrain recommendations above.

It should be noted that 2013 CBC requires that seismic lateral earth pressures be considered for retaining walls supporting more than 6 feet of backfill height. If site retaining walls with more than 6 feet of backfill height are required at this site, we should be consulted to determine the seismic lateral earth pressures.

NEW VEHICULAR AND PEDESTRIAN BRIDGES

SEISMIC DESIGN CRITERIA

Based on the methodology and procedures outlined in Caltrans Seismic Design Criteria (SDC) Version 1.7, dated April 2013 and using the Caltrans ARS Online program (version 2.3.07, March 2016), we have developed an acceleration response spectrum (ARS) for the new vehicular bridge at W. 3rd Street. The recommended acceleration response spectrum is presented on Plate 19. At the discretion of the project structural engineer, this recommended acceleration response spectrum may also be used for the new pedestrian bridge at the northwestern portion of West Little Llagas Creek Park.

BRIDGE FOUNDATIONS

In order to reduce the potential adverse effects of creek scour undermining the two new bridges, we suggest that the bridge foundations be located at least 10 feet away from the top of the creek bank. If the abutments will be located away from the creek (during high water flows), scour would not be an issue for the bridge foundations. Otherwise, a hydraulic evaluation (which is outside our expertise) may be needed to estimate the scour zone. If that is the case, those foundations must extend below the potential scour zone and be designed to safely support the design loads even if the upper soils are lost to scour.

It is our opinion that, not to exclude other pile types, both the new vehicular bridge and the new pedestrian bridge can be supported on cast-in-drilled-hole (CIDH) piles. The CIDH piles should be designed using the geotechnical engineering criteria below:

Allowable Skin Friction (may be increased by 1/3 for seismic and/or wind loads	600 psf
Passive Equivalent Fluid Pressure (neglect the upper 3 feet in calculating the passive resistance)	300 pcf
Minimum Pier Diameter	24 inches*
Minimum Pier Depth (below the creek bed) Vehicular Bridge Pedestrian Bridge	 15 feet[#] 10 feet[#]
Minimum Pier Center-to-Center Spacing	3 pier diameters

** Please note that when groundwater is anticipated, CIDH piles must be at least 24 inches in diameter and designed to accommodate the construction techniques associated with drilled shafts in wet holes in accordance with Caltrans Memo to Designers 3-1, June 2014.*

[#] The required pier depth should be determined by the project structural engineer based on design structural loads.

The drilled piers will also provide uplift resistance against wind and/or seismic loads. In general, the uplift resistance may be taken as one-half of the downward capacity.

Provided that the drilled piers are designed according to the recommendations presented above and properly constructed with no significant defects, the total and differential settlements of the CIDH piles are estimated to be on the order of ½ and ¼ inch, respectively.

In general, CIDH piles should be constructed in accordance with the guidelines given in Section 49-3 "Cast-in-Place Concrete Piling" of the Caltrans Standard Specifications (2015). The Contractor should anticipate to encounter groundwater in the drilled shaft holes and to make provisions, as appropriate, to construct CIDH piles under such conditions. Due to the presence of sandy/gravelly soils and shallow groundwater at the site, the use of temporary casing and/or slurry construction should be anticipated.

The CIDH piles should be drilled and poured on the same day. The drilled shaft holes should not be left open overnight or through the weekend. If water is encountered during drilling, the water should be removed prior to concrete placement. Alternatively, the concrete may be placed using tremie method.

The structural loads for the two new bridges are not available at the time of this report. If the two new bridges will be designed per Caltrans' Load and Resistance Factor Design (LRFD) requirements, we can provide complete foundation recommendations in the Pile Data Table per Caltrans Memo to Designers 3-1 (June 2014), when the structural loads and foundation design information are available from the project structural engineer.

GEOTECHNICAL INPUT PARAMETERS FOR LATERAL PILE (LPILE) ANALYSIS

If the project structural engineer will perform LPILE analysis for the two new bridges, we can provide our recommended geotechnical input parameters for LPILE analysis (including p-multipliers for group effects) in collaboration with the project structural engineer.

ABUTMENT AND WING WALLS

The abutments and wing walls should be designed as retaining walls. We recommend that the lateral earth pressures contained in the "Site Retaining Walls" section above be incorporated in the abutment and wing wall design. An average soil pressure of 5.5 ksf may be used to calculate the ultimate passive capacity of the abutment wall, wing wall or soil shear key under seismic condition. This soil pressure is based on a 5½-foot high wall and would be reduced linearly in proportion to the wall height of less than 5½ feet.

Permanent drainage should be installed at the abutments and wing walls to prevent buildup of hydrostatic pressure. The drains should consist of a 12-inch wide blanket of Class 2 Permeable Material conforming to Section 68-2.02F(3) of the Caltrans Standard Specifications (2015), with suitable gravity discharge via weep holes or pipe. The permeable material should be placed from near the base of the walls to 1 foot below the top of the walls.

STRUCTURE BACKFILL

The abutment and wing walls should be backfilled with "Structure Backfill" conforming to Section 19-3.02C of the Caltrans Standard Specifications (2015). The abutment and wing wall backfill should

be moisture conditioned to above the optimum moisture content and compacted to at least 95 percent relative compaction per ASTM D-1557.

Heavy compaction equipment should not be used within 18 inches of the back of the walls and where used, it should be used in such a manner to avoid overstressing or deflecting the walls. The walls should be properly braced during backfilling if heavy compaction equipment will be used directly behind the wall or possibility for excessive lateral pressure surcharge due to compaction is anticipated.

APPROACH SLABS FOR NEW VEHICULAR BRIDGE

To maintain the post-earthquake function of the new vehicular bridge, we recommend that approach slabs be installed at the abutments. The approach slabs will also accommodate possible differential fill settlement at the abutment walls.

The aggregate base underneath the approach slab should have a minimum thickness of 12 inches. The aggregate base should consist of Class 2 aggregate base conforming to the requirements in Section 26-1.02B of the Caltrans Standard Specifications (2015).

PUBLIC RESTROOM BUILDINGS

From a geotechnical engineering standpoint, the new public restroom buildings can be supported on a conventional rebar reinforced slab foundation founded on compacted engineered fill or firm on-site soils. We recommend that the following criteria be incorporated in the design of the new public restroom building foundations.

Allowable Bearing Capacity (may be increased by 1/3 for seismic and/or wind load)	1,500 psf
Passive Equivalent Fluid Pressure (neglect the upper 1 foot if the ground surface is not confined by pavement or slab)	300 pcf
Base Friction Coefficient	0.3
Modulus of Vertical Subgrade Reaction	28 psi/in
Minimum Interior Span	12 feet
Minimum Perimeter Cantilever	3 feet
Minimum Slab Thickness	8 inches

During utility trench excavation and backfilling, previously compacted subgrade soils may be disturbed. These soils should be uniformly moisture conditioned and re-compacted according to the requirements outlined in the "Site Preparation and Grading" section.

Where moisture vapor through the slab would be objectionable, the use of a vapor barrier and capillary moisture break should be considered by the designer of the slab and floor covering. The slab designer should determine the thicknesses of the slab, vapor barrier, rock cushion and sand cushion.

FOUNDATION PERIMETER DRAINAGE

In general, grading around the new public restroom buildings should be performed to provide a positive drainage away from the building foundations. The rainwater collected on the roof should be piped away from the buildings to prevent water from perching adjacent to the foundations.

NO.	DESCRIPTION	DATE	BY
	PRELIM SET #01 OUT	11-15-16	
	PRELIM SET #02 OUT	11-16-16	

Revisions

WORK ACCEPTED: INSPECTOR:
BY: DATE:

DRAWN: SDS
DESIGN:
CHECKED:
APPROVED: DATE: 12/15/16
KARL D. BJARKE - CITY ENGINEER
RCE 39416 EXP. 12/31/2017

HOR: N/A
VERT: N/A
JOB NUMBER: 135013

City of Morgan Hill
Public Works Department
CITY OF MORGAN HILL
17575 Peak Ave. Morgan Hill, CA 95037 (408)778-6480, Fax (408)779-7236

exeLOO® the complete public restroom solution

HUME ENGINEERS
P.O. Box 15238 San Luis Obispo, Ca. 93406
Phone: (805) 543-8311 Fax: (805) 781-9476
e-mail: mail@hengineers.com SB Phone: 962-8311
www.hengineers.com

SDS Structural Design Solutions

DEPOT STREET AND E 4TH STREET, MORGAN HILL, CA 95037

FOUNDATION & ROOF PLAN
DEPOT PARK

FILE NUMBER: 16 049
PRINT DATE: 12/07/16
SHEET NUMBER: RSR1

BID ALTERNATE NO.1

O:\Jobs Active\16 049 Morgan Hill_Exeloo\16 049 Dwg's Version 11.0\xref\16 049 D- SOILS REPORT.dwg, 11/16/2016 10:03:03 AM, JesseP