PATH

BID DRAWINGS FOR
HILLTOP PARK
DEL MONTE AVENUE AND WEST 3RD STREET, MORGAN HILL, CA 95037
VERDE DESIGN, INC. PROJECT NO. 1520400

VICINITY MAP AND CONSTRUCTION ROUTE

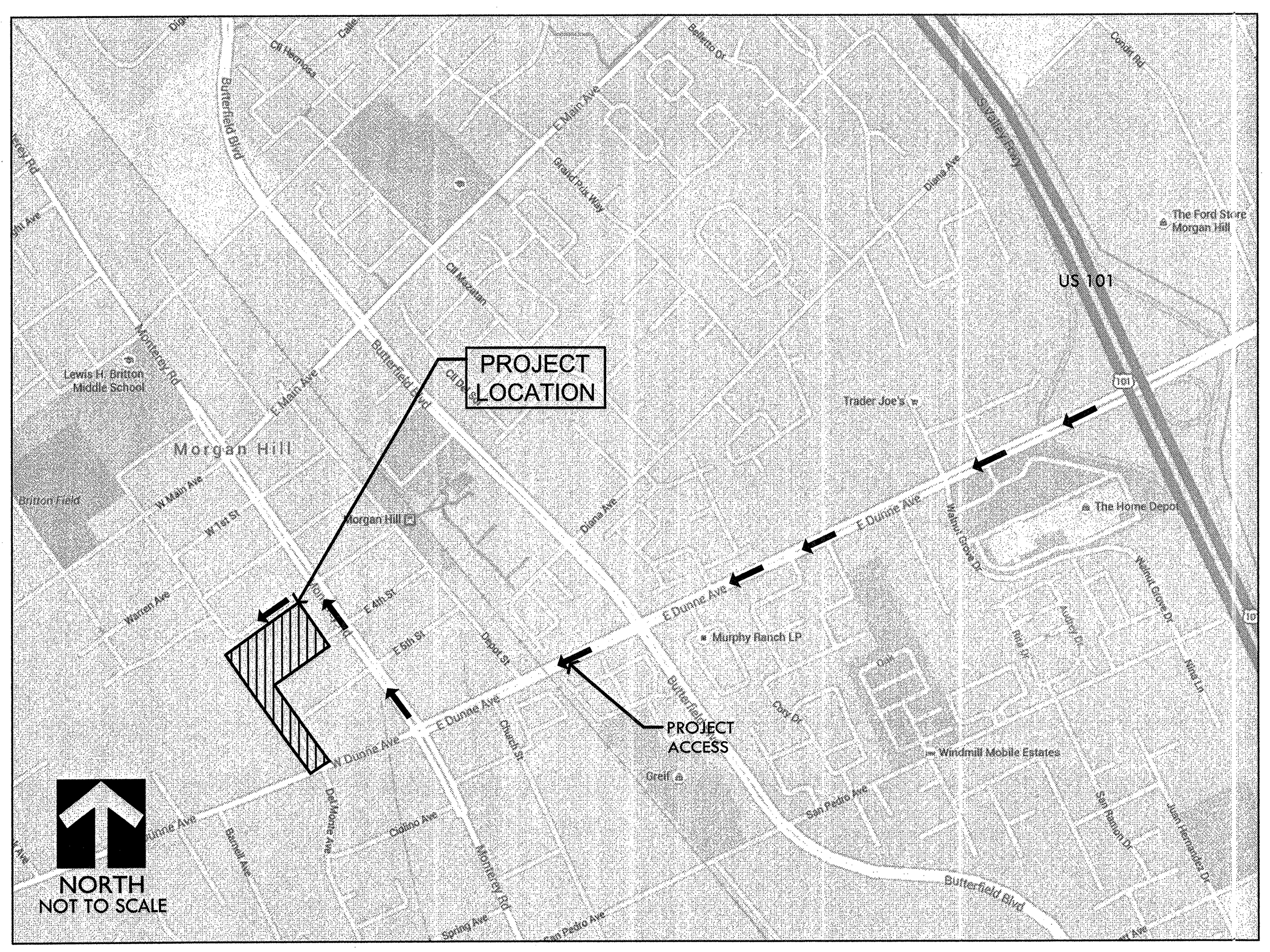

APPLICABLE CODES

1. 2013 CBC CHAPTER 35: PROVIDE ALL THE APPLICABLE/ADOPTED STANDARDS. WHERE A PARTICULAR STANDARD IS REFERENCED IN THE CODE BUT DOES NOT APPEAR AS AN ADOPTED STANDARD IT MAY STILL BE USED. APPLY ONLY THE PORTION OF THE STANDARD THAT IS APPLICABLE TO THE CODE SECTION WHERE THE STANDARD IS REFERENCED, NOT THE ENTIRE STANDARD.

   2013 BUILDING STANDARDS ADMINISTRATIVE CODE, PART 1, TITLE 24 C.C.R.
   CALIFORNIA BUILDING CODE (CBC), PART 2, TITLE 24 C.C.R.
   (2012 INTERNATIONAL BUILDING CODE VOLUMES 1-3 AND 2010 CALIFORNIA AMENDMENTS)
   CALIFORNIA ELECTRICAL CODE (CEC), PART 3, TITLE 24 C.C.R.
   (2011 NATIONAL ELECTRICAL CODE AND 2013 CALIFORNIA AMENDMENTS)
   CALIFORNIA MECHANICAL CODE (CMC) PART 4, TITLE 24 C.C.R.
   (2012 UNIFORM MECHANICAL CODE AND 2010 CALIFORNIA AMENDMENTS)
   CALIFORNIA PLUMBING CODE (CDC), PART 5, TITLE 24 C.C.R.
   (2012 UNIFORM PLUMBING CODE AND 2010 CALIFORNIA AMENDMENTS)
   2013 CALIFORNIA ENERGY CODE, PART 6, TITLE 24 C.C.R.
   2013 CALIFORNIA FIRE CODE, PART 9, TITLE 24 C.C.R.
   (2012 INTERNATIONAL FIRE CODE AND 2012 CALIFORNIA AMENDMENTS)
   CALIFORNIA EXISTING BUILDING CODE, PART 10, TITLE 24 C.C.R.
   (2012 INTERNATIONAL EXISTING BUILDING CODE AND 2012 CALIFORNIA AMENDMENTS)
   2013 CALIFORNIA "GREEN" BUILDING REQUIREMENTS OR CAL GREEN, PART 11, TITLE 24 C.C.R.
   2013 CALIFORNIA REFERENCED STANDARDS, PART 12, TITLE 24 C.C.R.
   2013 TITLE 19 C.C.R., PUBLIC SAFETY, STATE FIRE MARSHAL REGULATIONS.

   LIST OF FEDERAL CODES AND STANDARDS (IF APPLICABLE)
   AMERICANS WITH DISABILITIES ACT (ADA), TITLE II OR TITLE III
   FOR TITLE II: UNIFORM FEDERAL ACCESSIBILITY STANDARDS (UFAS) — 28 CFR 35.151(c)
   OR ADA STANDARDS FOR ACCESSIBLE DESIGN (APPENDIX A OF 28 CFR PART 36)
   FOR TITLE III: ADA STANDARDS FOR ACCESSIBLE DESIGN (APPENDIX A OF 28 CFR PART 36) — 28 CFR 36.406
   2010 AMERICANS WITH DISABILITIES ACT (ADA) STANDARDS FOR ACCESSIBLE DESIGN

   NOTE: TITLE II APPLIES TO PROJECTS FUNDED AND/OR USED BY STATE AND LOCAL GOVERNMENT SERVICES. TITLE III COVERS PUBLIC ACCOMMODATIONS AND COMMERCIAL FACILITIES. DEPENDING ON THE USE AND FUNDING, BOTH TITLE MAY APPLY TO THE PROJECT.

NFPA 13	AUTOMATIC SPRINKLER SYSTEMS	2013 EDITION
NFPA 14	STANDPIPE SYSTEMS	2013 EDITION
NFPA 17	DRY CHEMICAL EXTINGUISHING SYSTEMS	2013 EDITION
NFPA 17A	WET CHEMICAL SYSTEMS	2013 EDITION
NFPA 20	STATIONARY PUMPS	2013 EDITION
NFPA 24	PRIVATE MAINS	2013 EDITION
NFPA 72	NATIONAL FIRE ALARM CODE (CALIFORNIA AMENDED) (NOTE SEE UL STANDARD 1971 FOR "VISUAL DEVICES)	2013 EDITION
NFPA 253	CRITICAL RADIANT FLUX OF FLOOR COVERING SYSTEMS	2011 EDITION
NFPA 2001	CLEAN AGENT FIRE EXTINGUISHING SYSTEMS	2012 EDITION
ASME 17.1	ELEVATOR STANDARD	2013 EDITION

   REFERENCE CODE SECTIONS FOR APPLICABLE STANDARDS - 2013 CALIFORNIA BUILDING CODE (FOR SFM) REFERENCED STANDARDS CHAPTER 35

   ADA STANDARD FOR ACCESSIBLE DESIGN (APPENDIX A OF 28 CFR PART 36)

2. THE INTENT OF THESE DRAWINGS AND SPECIFICATIONS IS THAT WORK OF THE ALTERATION, REHABILITATION OR RECONSTRUCTION IS TO BE IN ACCORDANCE WITH TITLE 24, CALIFORNIA CODE OF REGULATIONS. SHOULD ANY EXISTING CONDITIONS SUCH AS DETERIORATION OR NON-COMPLYING CONSTRUCTION BE DISCOVERED WHICH IS NOT COVERED BY THE CONTRACT DOCUMENTS WHEREIN THE FINISHED WORK WILL NOT COMPLY WITH TITLE 24, CALIFORNIA CODE OF REGULATIONS, A CHANGE ORDER, OR A SEPARATE SET OF PLANS AND SPECIFICATIONS, DETAILING AND SPECIFYING THE REQUIRED WORK SHALL BE SUBMITTED TO AND APPROVED BY THE OWNER REPRESENTATIVE BEFORE PROCEEDING WITH THE WORK.

3. ALL EXISTING FIRE EXTINGUISHING SYSTEMS ARE IN COMPLIANCE WITH UL 300, CBC 904.11, CFC 904.11.

PREPARED BY

VERDE DESIGN
LANDSCAPE ARCHITECTURE
CIVIL ENGINEERING
SPORT PLANNING & DESIGN
www.VerdeDesignInc.com

2455 The Alameda
Santa Clara, CA 95050
tel: 408.985.7200
fax: 408.985.7260

1024 Iron Point Rd.
Suite 100 #1241
Folsom, CA 95630
tel: 916.415.6567
fax: 408.985.7260

REGISTERED LANDSCAPE ARCHITECT
DEREK MCKEE
No. 4148
Signature
EXPIRATION DATE: DEC. 2017
STATE OF CALIFORNIA

ALL IDEAS, DESIGNS, ARRANGEMENTS, AND PLANS INDICATED OR REPRESENTED BY THIS DRAWING ARE OWNED BY AND THE PROPERTY OF VERDE DESIGN, INC. AND WERE CREATED, EVOLVED, AND DEVELOPED FOR USE ON AND IN CONNECTION WITH THE SPECIFIED PROJECT. NONE OF SUCH IDEAS, DESIGNS, ARRANGEMENTS OR PLANS SHALL BE USED, REPRODUCED, OR PUBLISHED BY ANY METHOD, IN WHOLE OR IN PART, OR DISCLOSED TO ANY PERSON, FIRM, OR CORPORATION FOR ANY PURPOSE WHATSOEVER WITHOUT WRITTEN PERMISSION OF VERDE DESIGN, INC.

SCOPE OF WORK

SITE IMPROVEMENTS INCLUDE: CLEAR AND GRUB AND DEMOLITION OF EXISTING HARDSCAPE PAVING, FENCING AND SOFTSCAPE. CONTRACTOR TO COMPLETE; EARTHWORK, GRADING, SITE DRAINAGE, PAVING, SIDEWALK, SIGNAGE, SITE FURNISHINGS, IRRIGATION, PLANTING AND ELECTRICAL. CONTRACTOR SHALL COORDINATE ALL WORK WITH THE CITY'S REPRESENTATIVE.

BID ALTERNATES

ADD. ALTERNATE NO. 2- SLIDE AREA:
INCLUDES: (2) MANUFACTURE CUSTOM SLIDES AND ASSOCIATED STAIRS, HANDRAILS, AND WALLS WITHIN THE AREA.

GENERAL NOTES

1. PRIOR TO BIDDING, THE GENERAL CONTRACTOR SHALL VISIT & INSPECT THE SITE & FAMILIARIZE THEMSELVES WITH EXISTING CONDITIONS AFFECTING THE NEW WORK. THE GENERAL CONTRACTOR SHALL NOT DISPUTE, COMPLAIN OR ASSERT THAT THERE IS ANY MISUNDERSTANDING IN REGARDS TO LOCATION, EXTENT, NATURE OR AMOUNT OF WORK TO BE PERFORMED UNDER THIS CONTRACT DUE TO THE CONTRACTOR'S FAILURE TO INSPECT THE SITE. CONTRACTOR SHALL NOTIFY THE OWNER OF ANY CONDITIONS, REQUIRING WORK, WHICH ARE NOT COVERED IN THE CONTRACT DOCUMENTS.
2. NO CONSTRUCTION SHALL COMMENCE WITHOUT THE OFFICIAL NOTICE TO PROCEED FROM THE OWNER.
3. THE GENERAL CONTRACTOR & SUBCONTRACTORS ARE RESPONSIBLE FOR LOCATING & VERIFYING ALL EXISTING UNDERGROUND UTILITIES IN ALL AREAS OF NEW WORK PRIOR TO COMMENCEMENT OF EXCAVATION. EXISTING UTILITIES SHOWN ON THE DRAWINGS ARE APPROXIMATE ROUTING LOCATIONS AS BEST DETERMINED FROM EXISTING DRAWINGS AND THE OWNER, BUT SHOULD NOT BE CONSTRUED TO REPRESENT ALL OF THE EXISTING UNDERGROUND UTILITIES. THE CONTRACTOR SHALL POTHOLE ALL EXISTING UTILITIES THAT MAY BE AFFECTED BY NEW FACILITIES IN THIS CONTRACT. VERIFY ACTUAL LOCATION AND DEPTH OF UTILITIES, AND REPORT POTENTIAL CONFLICTS TO THE OWNER PRIOR TO EXCAVATING FOR NEW FACILITIES.
4. CONTRACTOR SHALL TAKE ALL NECESSARY STEPS TO PROTECT ALL EXISTING UTILITIES, WHETHER SHOWN OR NOT, IN THE CONTRACT DOCUMENTS. CONTRACTOR SHALL BE RESPONSIBLE FOR ALL DAMAGES TO EXISTING UTILITIES CAUSED BY ITS OPERATIONS.
5. THE CONTRACTOR SHALL PROTECT ALL EXISTING ITEMS WITHIN SITE IMPROVEMENTS. IT IS THE RESPONSIBILITY OF THE CONTRACTOR TO REPAIR ALL DAMAGED AREAS TO THEIR ORIGINAL CONDITION OR BETTER AT CONTRACTOR'S EXPENSE TO THE SATISFACTION OF THE OWNER.
6. DIMENSIONS AND LOCATIONS OF EXISTING FACILITIES ARE APPROXIMATE AND SHALL BE FIELD VERIFIED BY CONTRACTOR. ANY DISCREPANCIES SHALL BE IMMEDIATELY BROUGHT TO THE ATTENTION OF THE OWNER.
7. ALL WORK SHALL CONFORM TO THE LATEST EDITION OF THE CALIFORNIA BUILDING CODE, CALIFORNIA PLUMBING CODE, CALIFORNIA FIRE CODE AND ALL APPLICABLE STATE AND LOCAL CODES AND ORDINANCES, AS WELL AS ADAPTED STANDARDS.
8. ALL NOTES ARE FOR GENERAL REFERENCE IN CONJUNCTION WITH, AND AS A SUPPLEMENT TO, THE WRITTEN SPECIFICATIONS AND DETAILS ASSOCIATED WITH THE CONTRACT DOCUMENTS.
9. THIS DRAWING SET SHALL BE USED IN CONJUNCTION WITH THE CSI FORMAT SPECIFICATIONS PUBLISHED IN BOOK FORM. COMBINED, THEY ARE HEREIN REFERRED TO AS THE "CONTRACT DOCUMENTS".
10. DIMENSIONS ON WORKING DRAWINGS TAKE PRECEDENCE OVER MEASURED ELEMENTS. CONTRACTOR SHALL NOT SCALE DRAWINGS.
11. ALL TYPICAL DETAILS SHALL APPLY UNLESS NOTED OTHERWISE.
12. CONTRACTOR SHALL PROVIDE ADEQUATE DUST CONTROL AND KEEP MUD AND DEBRIS OFF THE PUBLIC RIGHT-OF-WAY AT ALL TIMES.
13. ALL TRENCHES AND EXCAVATIONS SHALL BE CONSTRUCTED IN STRICT COMPLIANCE WITH THE APPLICABLE SECTIONS OF CALIFORNIA AND FEDERAL O.S.H.A. REQUIREMENTS AND OTHER APPLICABLE SAFETY ORDINANCES. CONTRACTOR SHALL BEAR FULL RESPONSIBILITY FOR TRENCH SHORING DESIGN AND INSTALLATION.
14. ANY ALTERATIONS OF EXISTING FACILITIES TO ACCOMMODATE THE INSTALLATION OF NEW WORK SHALL BE REVIEWED BY THE OWNER PRIOR TO COMMENCING WORK.
15. ANY DISRUPTION OF THE UTILITIES MUST BE COORDINATED AND APPROVED BY THE OWNER AND INSPECTOR OF RECORD PRIOR TO COMMENCING WORK.
16. ALL TEMPORARY WORK SHALL BE CONSIDERED A PART OF THIS CONTRACT AND NO EXTRA CHARGES WILL BE ALLOWED. THIS SHALL INCLUDE MINOR ITEMS OF MATERIAL OR EQUIPMENT NECESSARY TO MEET THE REQUIREMENTS AND INTENT OF THE PROJECT.
17. THE PLANS AND SPECIFICATIONS DO NOT UNDERTAKE TO SHOW OR LIST EVERY ITEM TO BE PROVIDED, BUT RATHER TO DEFINE THE REQUIREMENTS FOR A FULL AND WORKING SYSTEM FROM THE STANDPOINT OF THE END USER. FOR THIS REASON, WHEN AN ITEM NOT SHOWN OR LISTED IS CLEARLY NECESSARY FOR PROPER CONTROL/OPERATION OF EQUIPMENT WHICH IS SHOWN OR LISTED, THE CONTRACTOR SHALL PROVIDE AN ITEM WHICH WILL ALLOW THE SYSTEM TO FUNCTION PROPERLY AT NO INCREASE IN PRICE.
18. ALL CONTRACTORS SHALL REMOVE TRASH AND DEBRIS STEMMING FROM THEIR WORK ON A DAILY BASIS. PROJECT SITE SHALL BE MAINTAINED IN A CLEAN AND ORDERLY CONDITION.
19. THE DETAILS REFLECT THE DESIGN INTENT FOR TYPICAL CONDITIONS. THE CONTRACTOR SHALL VERIFY ALL FIELD CONDITIONS AND SHALL INCLUDE, IN HIS SCOPE, THE COST FOR COMPLETE FINISHED INSTALLATIONS, INCLUDING ANOMALIES, OF ALL TRADES.
20. NO WORK SHALL COMMENCE WITH UNAPPROVED MATERIALS. ANY WORK DONE WITH UNAPPROVED MATERIALS AND EQUIPMENT IS AT THE CONTRACTOR'S RISK AND IS SUBJECT TO REJECTION AND REPLACEMENT. SEE SPECIFICATIONS FOR SUBMITTAL AND SUBSTITUTION REQUIREMENTS.
21. CONSTRUCTION MATERIALS STORED ON THE SITE SHALL BE PROPERLY STACKED AND PROTECTED SO AS TO PREVENT DAMAGE OR DETERIORATION UNTIL USED. FAILURE IN THIS REGARD MAY BE CAUSE FOR REJECTION OF MATERIAL AND/OR WORK.
22. ALL EQUIPMENT SHALL BE FABRICATED FROM FIELD VERIFIED DIMENSIONS AND APPROVED SHOP DRAWINGS. COORDINATE MECHANICAL, PLUMBING AND ELECTRICAL EQUIPMENT.
23. CONTRACTOR SHALL PERFORM THEIR CONSTRUCTION AND OPERATIONS IN A MANNER WHICH WILL NOT ALLOW HARMFUL POLLUTANTS TO ENTER THE STORM DRAIN SYSTEM. TO ENSURE COMPLIANCE, THE CONTRACTOR SHALL IMPLEMENT THE APPROPRIATE BEST MANAGEMENT PRACTICE (BMP) AS OUTLINED IN THE BROCHURES ENTITLED "BEST MANAGEMENT PRACTICE FOR THE CONSTRUCTION INDUSTRY" ISSUED BY THE CALIFORNIA STORM WATER QUALITY ASSOCIATION, NONPOINT SOURCE POLLUTION CONTROL PROGRAM, TO SUIT THE CONSTRUCTION SITE AND JOB CONDITION. THE CONTRACTOR SHALL PRESENT HIS PROPOSED BMP AT THE PRECONSTRUCTION MEETING FOR DISCUSSION AND APPROVAL.
24. CONTRACTOR SHALL PROVIDE TEMPORARY CONSTRUCTION FENCING PER CONTRACT DOCUMENTS TO SERVE LIMIT OF WORK AREAS. FENCING MAY BE ADJUSTED DURING CONSTRUCTION BASED ON CONSTRUCTION SEQUENCE OR THE OWNER'S DIRECTION.
25. OVERNIGHT PARKING OF CONSTRUCTION EQUIPMENT IN THE STREET RIGHT-OF-WAY SHALL NOT BE PERMITTED.

CONTACT INFORMATION

ORGANIZATION	NAME	PHONE
OWNER CITY OF MORGAN HILL	CHRIS GHIONE	(408) 782-9154
CITY PROJECT MANAGER CITY OF MORAN HILL	YAT CHUEN CHO	(408) 310-4641
LANDSCAPE ARCHITECT/ CIVIL ENGINEER VERDE DESIGN INC.	CORBIN M.E. SCHNEIDER JIA LI	(408) 850-3416 (408) 850-3464
ELECTRICAL ENGINEER AMERICAN CONSULTING ENGINEERS ELECTRICAL, INC.	SAMMY FERNANDEZ	(408) 236-2312
STRUCTURAL ENGINEER MESITI-MILLER ENGINEERING, INC	DALE HENDSBEE	(831) 426-3186
GEOTECHNICAL ENGINEERS LAI & ASSOCIATES	PAUL LAI	(925) 639-3836

SHEET INDEX

SHEET NO.	SHEET DESCRIPTION
LANDSCAPE	
C0.0	COVER SHEET
L1.1	EXISTING CONDITIONS SURVEY PLAN
L2.1	EROSION AND SEDIMENT CONTROL PLAN
L3.1	DEMOLITION PLAN
L4.1	GRADING AND DRAINAGE PLAN
L5.1	LAYOUT PLAN
L5.2	LAYOUT PLAN
L6.1	MATERIAL AND DETAIL REFERENCE PLAN
L7.1	IRRIGATION PLAN
L8.1	PLANTING PLAN
D1.1	CONSTRUCTION DETAILS
D1.2	CONSTRUCTION AND FENCING DETAILS
D1.3	CONSTRUCTION AND SITE FURNISHING DETAILS
D1.4	CONSTRUCTION AND SITE FURNISHING DETAILS
D2.1	IRRIGATION & PLANTING DETAILS
ELECTRICAL	
E0.1	GENERAL NOTES, SYMBOL LIST, ABBREVIATIONS & FIXTURE SCHEDULE
E0.2	EXTERIOR LIGHTING - PART 1
E0.3	EXTERIOR LIGHTING - PART 2
E1.1	ELECTRICAL LIGHTING SITE PLAN
E1.2	WIRELESS ACCESS POINT & SECURITY CAMERA SITE PLAN
E2.1	SINGLE LINE DIAGRAM
E2.2	DATA & SECURITY CAMERA RISER DIAGRAM
E4.1	ELECTRICAL DETAILS
STRUCTURAL	
S1.0	PIER FOUNDATION DETAILS
BID ALTERNATE NO.2	
SL3.1	SLIDE DETAILS
SL3.2	SLIDE DETAILS
SL3.3	SLIDE DETAILS

COVER SHEET
HILLTOP PARK

VERDE DESIGN
LANDSCAPE ARCHITECTURE
CIVIL ENGINEERING
SPORT PLANNING & DESIGN
2455 The Alameda, Ste. 200
Santa Clara, CA 95050
tel: 408.985.7200
fax: 408.985.7260
www.verdedesigninc.com

DRAWN RK/JL	DESIGN CMES	HOR N/A	
CHECKED CMES/DM	DATE	VERT N/A	
APPROVED Karl D. Bjarke	DATE 12-15-16	JOB NUMBER 135013	

KARL D. BJARKE- CITY ENGINEER
RCE 39416 EXP. 12/31/2017

City of Morgan Hill
Public Works Department
CITY OF MORGAN HILL
17575 Peak Avenue Morgan Hill, CA 95037 (408)778-6480, Fax (408)779-7236

NO.	DESCRIPTION	DATE	BY

Revisions

FILE NUMBER: 1520400
PRINT DATE: 12/07/16
SHEET NUMBER: C0.0

BID DRAWINGS

SHEET_TITLE_S
PROJECT_TITLE_S

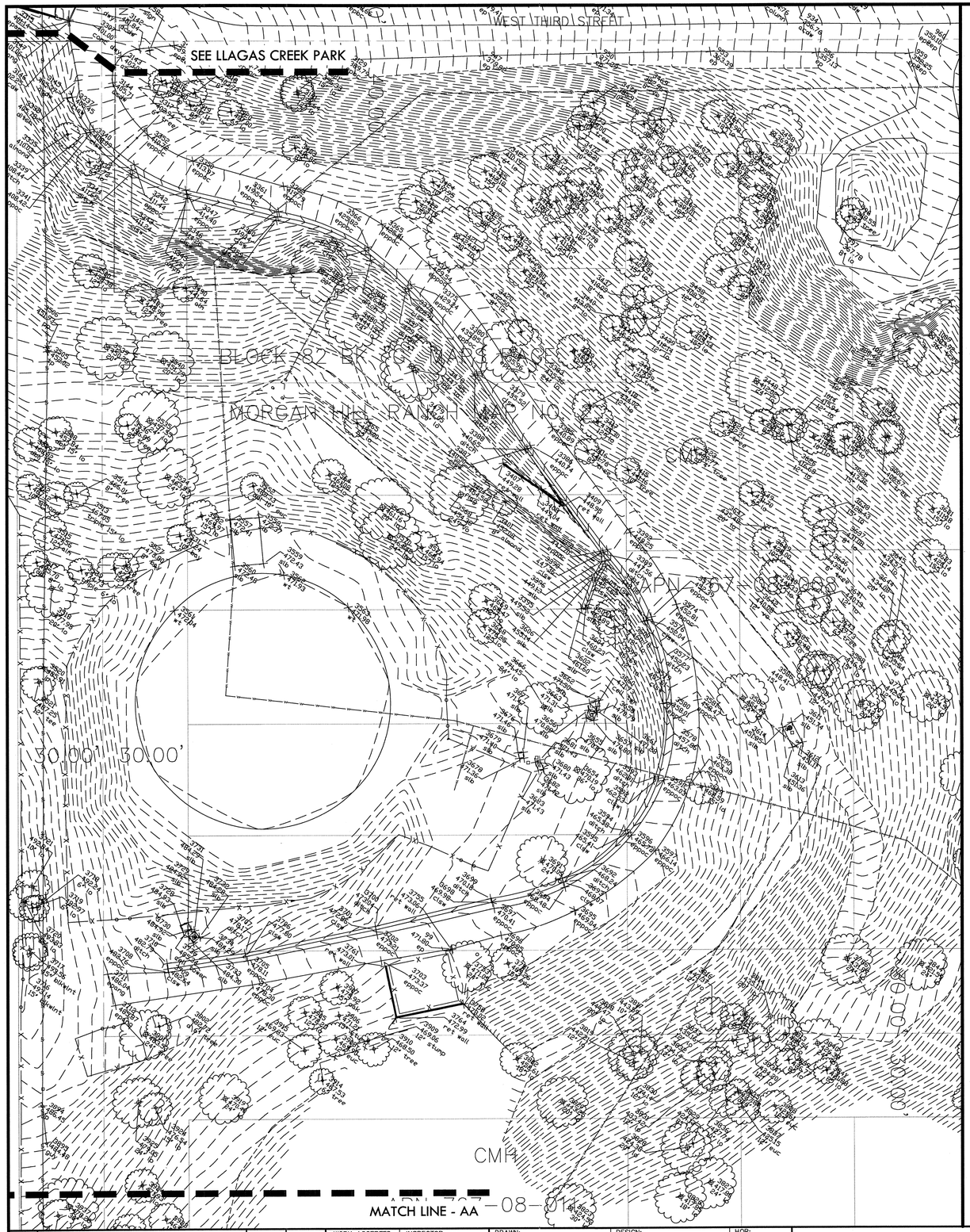

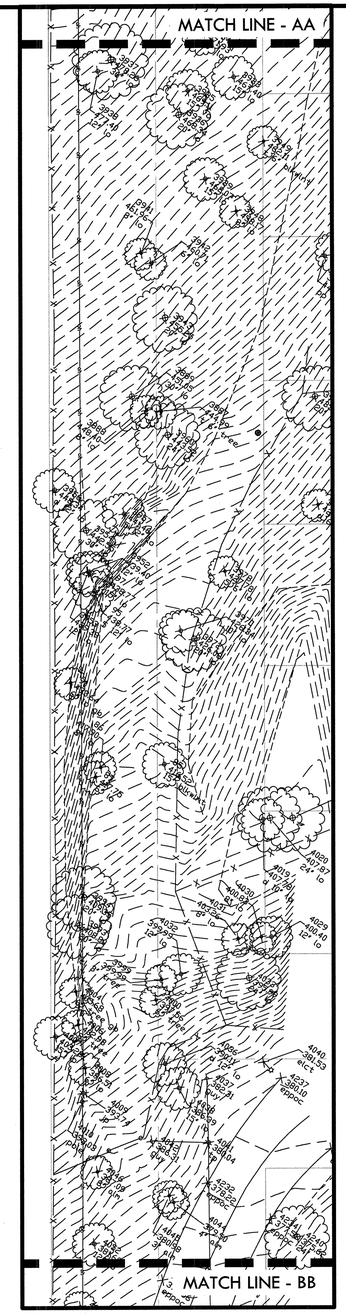

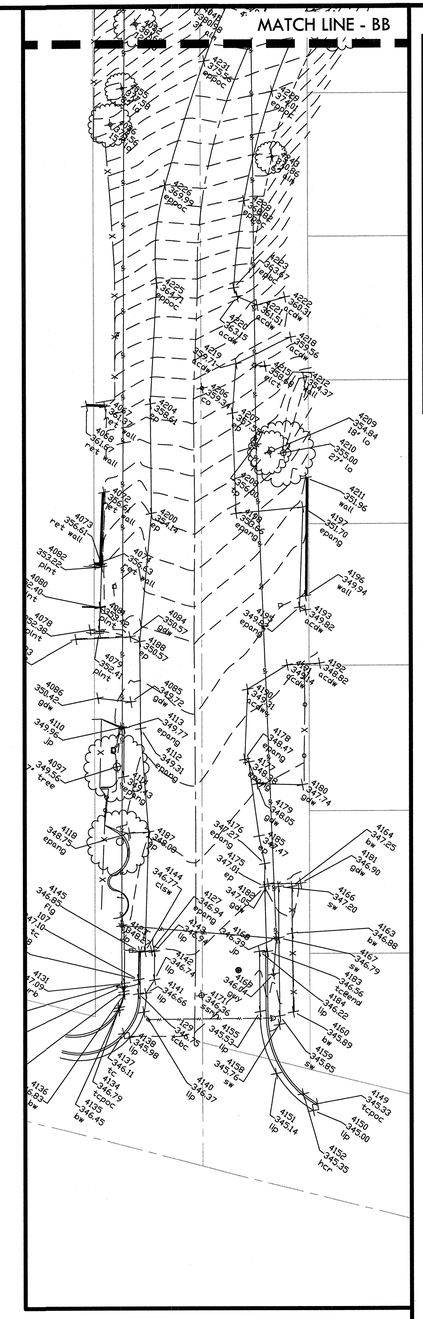

ABBREVIATIONS

	DESCRIPTION		DESCRIPTION
AB	AGGREGATE BASE (CLASS AS NOTED)	JP	JOINT POLE
AC	ASPHALT CONCRETE	MON	MONUMENT
AR	AIR RELIEF	NG	NATURAL GROUND ELEVATION
BC	BEGIN OF CURVE	OH	OVERHEAD UTILITY LINE
BLDG	BUILDING	PL	PROPERTY LINE
BW	BACK OF WALK	PB	PULL BOX
BO	BLOW OFF	PGEV	PG&E VAULT
BWAL	BLACK WALNUT TREE	PP	POWER POLE
BWF	BARB WIRE FENCE	PSE	PUBLIC SERVICE EASEMENT
CO	CURB INLET	PVC	POLYVINYL CHLORIDE PIPE
℄	CENTERLINE	ROW	RIGHT OF WAY
CLF	CHAIN LINK FENCE	RCP	REINFORCED CONCRETE PIPE
CLSW	CENTERLINE SWALE	RDWD	RED WOOD TREE
CMP	CORRUGATED METAL PIPE	RM	ELEVATION REFERENCE MARK
CO	CLEANOUT	SLB	SLAB
CP	CONTROL POINT	SD	STORM DRAIN LINE
DI	DROP INLET	SDMH	STORM DRAIN MANHOLE
DLITE	DAYLIGHT	SS	SANITARY SEWER LINE
DWY	DRIVEWAY	SSMH	SANITARY SEWER MANHOLE
DDW	DIRT DRIVEWAY	SP	SERVICE POLE
EL., ELEV.	ELEVATION	SW	SIDEWALK
ELCT	ELECTROLIER	TC	TOP OF CURB
EP	EDGE OF PAVEMENT ELEVATION	TOB	TOP OF BANK
EWAL	ENGLISH WALNUT TREE	TOE	TOE OF SLOPE
EUC	EUCALYPTUS TREE	TP	TELEPHONE POLE
FH	FIRE HYDRANT	VO	VALLEY OAK TREE
F	FLOWLINE	UG	UNDERGROUND GAS
FNC	FENCE	USS	UNDERGROUND SANITARY SEWER
FOG	FOG LINE	USD	UNDERGROUND STORM DRAIN
GB	GRADE BREAK	UT	UNDERGROUND TELEPHONE
HRAIL	HAND RAIL	UW	UNDERGROUND WATER
HCR	HANDICAP RAMP	WL	WHITE LINE STRIPE
HCS	HANDICAP STRIPE	WO	WHITE OAK TREE
IP	IRON PIPE	WM	WATER METER
LIP	LIP OF GUTTER	WV	WATER VALVE
LO	LIVE OAK TREE	YL	YELLOW LINE STRIPE

SCVWD BM002
ELEVATION = 342.80 (NAVD 88)
BRASS DISC ON TOP OF CONCRETE CURB. N/W CORNER OF INTERSECTION MONTEREY ROAD AND WEST DUNNE AVE.

CITY OF MORGAN HILL

SITE MAPPING OF DEPOT STREET – APN 726-13-047
FIELD WORK WAS COMPLETED ON FEB 22, 2016 BY MH ENGINEERING CO, 408-779-7381

SITE MAPPING OF HILLTOP – APN 767-08-008, 767-07-042 & 065
FIELD WORK WAS COMPLETED ON MARCH 3, 2016 BY MH ENGINEERING CO, 408-779-7381

MEASUREMENTS SHOWN IN FEET AND DECIMALS THEREOF (XXX.XX')

COORDINATES ARE BASED ON A LOCAL COORDINATE SYSTEM
ELEVATIONS ARE BASED ON NAVD 88 (SCVWD BM002)

USERS OF THIS MAP ARE ADVISED TO CONTACT THE PREPAREER TO BE SURE THERE ARE NO PERTINANT REVISIONS TO THE COPY OBTAINED. PLEASE NOTE THAT CERTIFIED ORIGINALS AND/OR PRINTS ARE "WET SIGNED". ANY ORIGINALS AND/OR PRINTS NOT "WET SIGNED" ARE NOT CERTIFIED.

THIS MAP WAS PREPARED UNDER MY DIRECTION TO THE NORMAL STANDARDS OF CARE OF PROFESSIONAL LAND SURVEYORS IN THE STATE OF CALIFORNIA.

WILLIAM J. MCCLINTOCK, RCE 24893

NORTH
0' 10' 20' 40' 60'

MH engineering Co.
16075 Vineyard Boulevard
(408) 779-7381
Morgan Hill, CA 95037
(408) 226-5712 FAX

REGISTERED PROFESSIONAL ENGINEER
WILLIAM J. McCLINTOCK
No. 24893
EXP. 12-31-17
CIVIL
STATE OF CALIFORNIA

NO.	DESCRIPTION	DATE	BY

Revisions

WORK ACCEPTED: INSPECTOR:
BY: DATE:

DRAWN: DESIGN: HOR: N/A
CHECKED: VERT: N/A
APPROVED: DATE: 12/15/16 JOB NUMBER: 135013
KARL D. GEARKE- CITY ENGINEER
RCE 39416 EXP. 12/31/2017

CITY OF MORGAN HILL
City of Morgan Hill
Public Works Department
17575 Peak Ave. Morgan Hill, CA 95037 (408)778-6480, Fax (408)779-7236

VERDE DESIGN
LANDSCAPE ARCHITECTURE
CIVIL ENGINEERING
SPORT PLANNING & DESIGN
2455 The Alameda, Ste. 200
Santa Clara, CA 95050
tel: 408.985.7200
fax: 408.985.7260
www.verdedesigninc.com

DEL MONTE AVE AND WEST 3RD STREET, MORGAN HILL, CA 95037

EXISTING CONDITIONS SURVEY PLAN
HILLTOP PARK

FILE NUMBER: 1520400
PRINT DATE: 12/07/16
SHEET NUMBER: L1.1

BID DRAWINGS

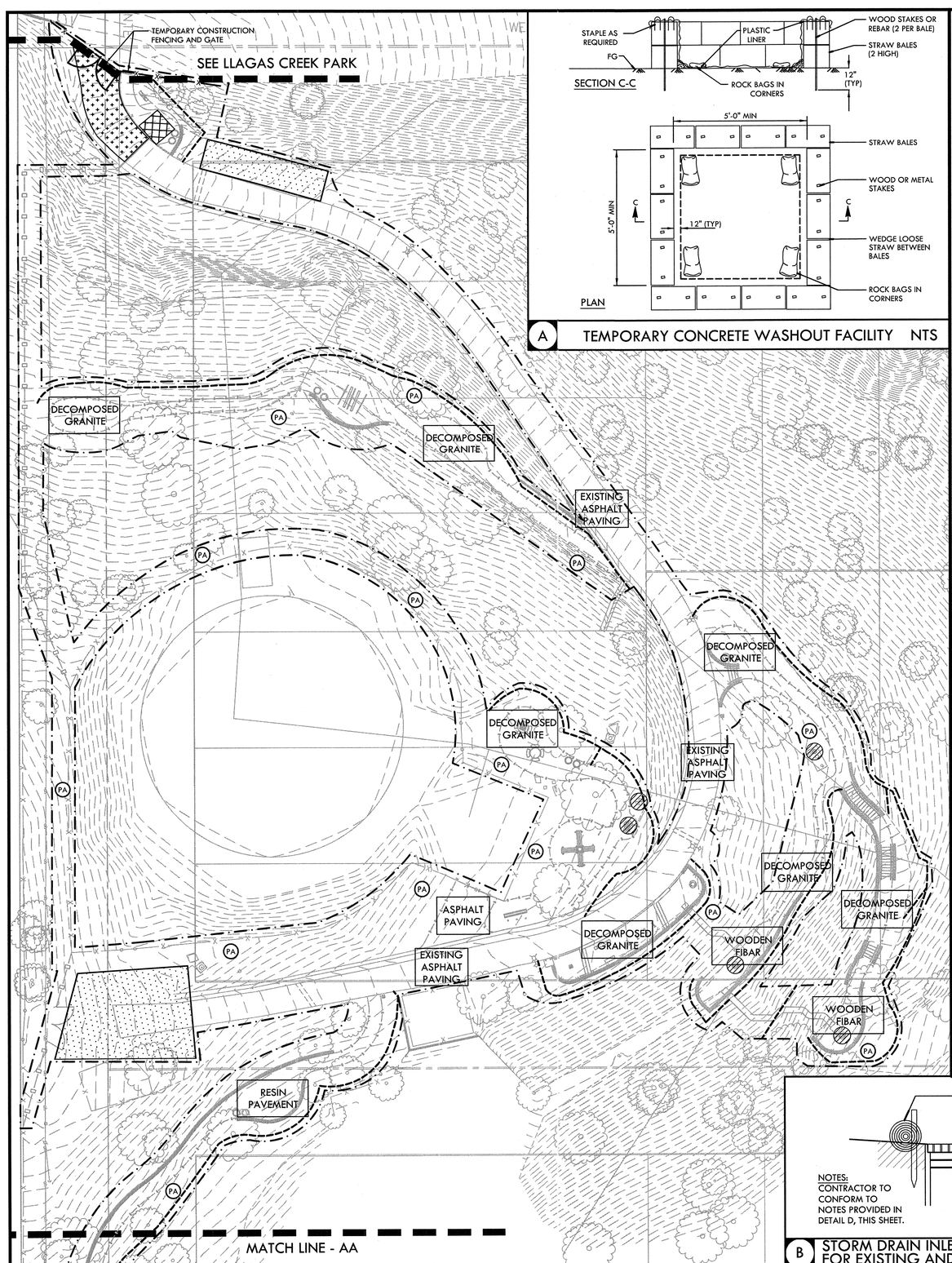

A TEMPORARY CONCRETE WASHOUT FACILITY NTS

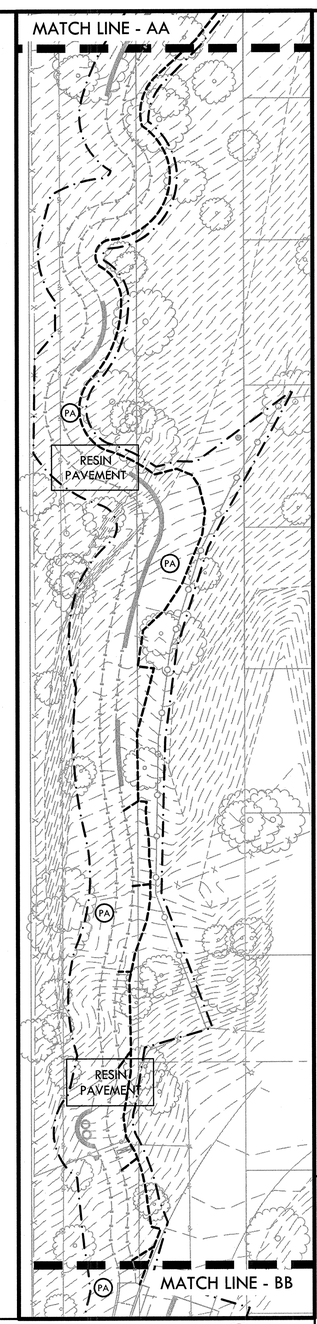

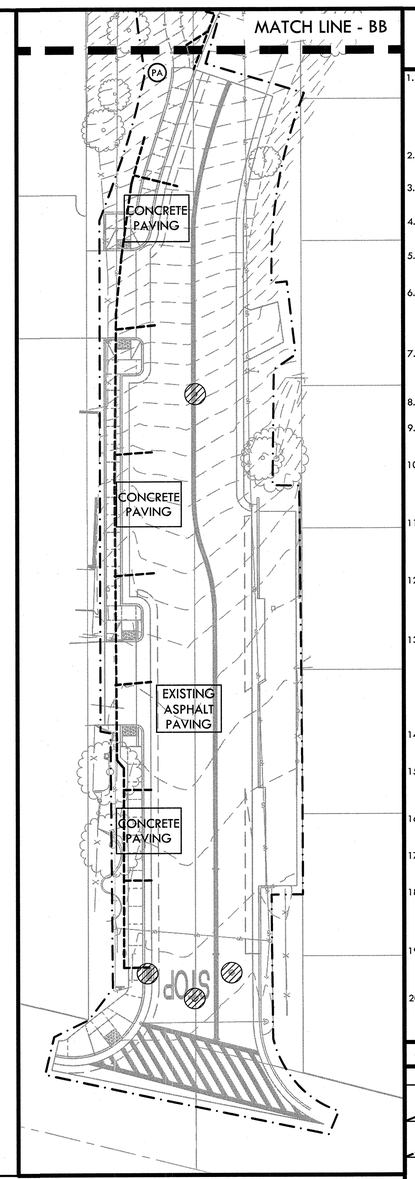

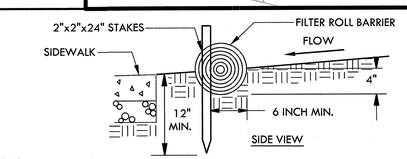

NOTES:
1. FILTER BARRIER SHALL BE CONSTRUCTED LONG ENOUGH TO EXTEND ACROSS THE EXPECTED FLOW PATH AND AS APPROVED BY THE ADMINISTRATOR.
2. FILTER ROLL (8" DIAMETER) SHALL BE PLACED INTO THE KEY TRENCH AND STAKES ON BOTH SIDES OF THE ROLL WITHIN 6' OF EACH END AND THEN EVERY 3' TO 4' WITH 2"x2"x24" STAKES. STAKES ARE TYPICALLY DRIVEN IN ON ALTERNATING SIDES OF THE ROLL. ADJACENT ROLLS SHALL TIGHTLY ABUT.
3. CLEAR SUBGRADE SO THAT REMOVAL OF ALL LOCAL DEVIATIONS AND TO REMOVE LARGE STONES OR DEBRIS THAT WILL INHIBIT INTIMATE CONTACT OF THE FIBER ROLL WITH THE SUB GRADE.
4. PRIOR TO ROLL INSTALLATION, CONTOUR A CONCAVE TRENCH (2") DEEP ALONG THE PROPOSED INSTALLATION ROUTE. FIBER ROLL SHALL BE INSTALLED ALONG THE SIDE OF WALKS AND AROUND THE CATCH BASINS. THE BOTTOM EDGE OF THE FIBER ROLL SHALL EXTEND TO AND ACROSS THE BOTTOM OF THE TRENCH. THE TRENCH SHALL BE BACKFILLED TO 4" ABOVE GROUND AND COMPACTED TO BURY AND SECURE THE BOTTOM OF THE FIBER ROLL.
5. CONTRACTOR SHALL MAKE INSPECTIONS WEEKLY DURING THE WET SEASON (NOVEMBER 15 - APRIL 15), MONTHLY DURING THE DRY SEASON AND IMMEDIATELY AFTER EACH RAINFALL TO DETERMINE IF REPAIRS AND SEDIMENT REMOVAL IS REQUIRED. SEDIMENT SHALL BE REMOVED BEFORE IT HAS REACHED ONE THIRD THE HEIGHT OF THE FILTER FABRIC.

C FILTER ROLL BARRIER NTS

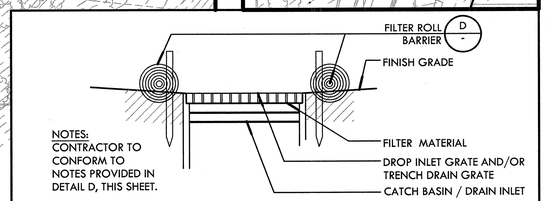

NOTES:
CONTRACTOR TO CONFORM TO NOTES PROVIDED IN DETAIL D, THIS SHEET.

B STORM DRAIN INLET FILTER FOR EXISTING AND PROPOSED STORM DRAINS NTS

EROSION AND SEDIMENT CONTROL NOTES

1. THIS WATER POLLUTION CONTROL PLAN MAY NOT COVER ALL THE SITUATIONS THAT ARISE DURING CONSTRUCTION DUE TO UNANTICIPATED FIELD CONDITIONS. THE CONTRACTOR SHALL IMPLEMENT BEST MANAGEMENT PRACTICES (BMPS) LISTED IN THE STORM WATER POLLUTION PREVENTION PLAN (SWPPP), AND SHALL IMPLEMENT AND MAINTAIN THE SWPPP FOR THE PROJECT IN FULL COMPLIANCE WITH THE REVISED STATE REGULATIONS TO CONTROL THE DISCHARGE OF STORMWATER POLLUTANTS.
2. EROSION AND SEDIMENT CONTROL PLAN SHALL BE CONSTRUCTED DURING FIRST WEEK OF CONSTRUCTION.
3. EROSION AND SEDIMENT CONTROL SHALL REMAIN THROUGHOUT CONSTRUCTION AND REMAIN AND DISPOSED DURING MAINTENANCE PERIOD.
4. EROSION AND SEDIMENT CONTROL MAY BE ADJUSTED THROUGH CONSTRUCTION WITH APPROVAL OR AS DIRECTED BY OWNER'S REPRESENTATIVE.
5. CONTRACTOR TO IMPLEMENT BMPS TO KEEP A CLEAN SITE AND PREVENT RUNOFF POLLUTION.
6. GATHER AND STORE ALL CONSTRUCTION DEBRIS DAILY IN APPROPRIATE CONTAINERS WHICH ARE EMPTIED OR REMOVED ON AN AT-LEAST WEEKLY BASIS. WHEN APPROPRIATE, USE TARPS ON THE GROUND TO COLLECT FALLEN DEBRIS OR SPLATTERS THAT COULD CONTRIBUTE TO STORMWATER POLLUTION.
7. USE A BROOM OR OTHER DRY CLEANUP METHOD TO REMOVE ALL DIRT/MUD, GRAVEL, DEBRIS, REFUSE AND GREEN WASTE FROM ALL PAVED SURFACES AND THE PUBLIC SIDEWALK AND STREET PAVEMENT DAILY AND PRIOR TO RAIN.
8. CLEAN UP LEAKS, DRIPS AND SPILLS IMMEDIATELY.
9. COVER ALL TEMPORARY STOCKPILES SECURELY WITH A TARP, PLASTIC SHEETING OR SIMILAR MATERIAL TO PREVENT WINDBLOWN DISPERSAL OR RUNOFF OF ANY MATERIAL.
10. USE/CREATE A CONTAINED AND COVERED AREA ON THE SITE FOR THE STORAGE OF CEMENT BAGS, PAINTS, FLAMMABLES, OILS, FERTILIZERS, PESTICIDES, OR ANY OTHER MATERIALS USED ON THE PROJECT SITE THAT HAVE THE POTENTIAL FOR BEING DISCHARGED TO THE STORM DRAIN SYSTEM BY WIND, EXPOSURE TO RAINFALL OR IN THE EVENT OF A MATERIAL SPILL.
11. PROVIDE EROSION "PREVENTION" (SOIL STABILIZATION) AND SITE PERIMETER PROTECTION MEASURES SUCH AS FIBER ROLLS, SILT FENCE, AND/OR SEDIMENT TRAPS OR BASINS TO PREVENT ANY SEDIMENT FROM LEAVING THE WORK SITE. MAINTAIN THESE MEASURES TO REMAIN EFFECTIVE.
12. INSTALL AND MAINTAIN A CONSTRUCTION ENTRANCE TO MINIMIZE THE TRACKING OF DIRT, MUD, DUST AND/OR DEBRIS ONTO THE PUBLIC RIGHT-OF-WAY. DURING WET WEATHER, AVOID DRIVING VEHICLES WHERE MUD OR OTHER WASTES CAN BE TRACKED ONTO THE PUBLIC RIGHT-OF-WAY.
13. PROTECT ALL STORM DRAIN INLETS AND PERVIOUS CONCRETE SWALES IN THE VICINITY OF THE WORK SITE USING FILTER MATERIALS SUCH AS GRAVEL BAGS AND FILTER FABRIC. INLET PROTECTIONS SHALL BE INSTALLED PRIOR TO ANY ACTIVITY THAT MAY RESULT IN THE DISCHARGE OF MATERIAL TO THE STORM DRAIN AND AFTER INSTALLATION OF PERVIOUS CONCRETE SWALES. MAINTAIN THESE FILTER MATERIALS TO REMAIN EFFECTIVE AND REMOVE ANY ACCUMULATED SEDIMENT DEPOSITS. REMOVE THESE MATERIALS DURING PROJECT WRAP-UP.
14. DIVERT ON-SITE STORMWATER FLOWS AROUND AREAS OF EXPOSED OR DISTURBED SOIL TO PREVENT EROSION OR SEDIMENT RUNOFF.
15. DESIGN ANY SITE DE-WATERING (I.E., THE REMOVAL OF WATER FROM AN EXCAVATION PIT) EFFORTS TO PREVENT THE DISCHARGE OF ANY SEDIMENT, DEBRIS OR OTHER POLLUTANTS TO THE STREET, SIDEWALK OR STORMWATER DRAINAGE SYSTEM.
16. VACUUM ALL PAVEMENT SAW-CUTTING SLURRY AND REMOVE FROM SITE. DO NOT ALLOW PAVEMENT SAW-CUT SLURRY TO ENTER THE STORMWATER DRAINAGE SYSTEM.
17. AVOID CLEANING OR RINSING ANY MACHINERY, TOOLS, BRUSHES, EQUIPMENT, CONTAINERS, SURFACES, ETC. INTO A STREET, GUTTER, STORM DRAIN OR WATERWAY.
18. ENSURE THAT CONCRETE SUPPLY TRUCKS AND/OR CONCRETE/PLASTER OPERATIONS DO NOT DISCHARGE WASH WATER OR WASTES INTO THE STREET, GUTTERS OR STORM DRAINS. CONCRETE TRUCKS SHALL HAVE A SELF-CONTAINED WASH-OUT SYSTEM OR DISCHARGE TO A DEDICATED, SECURE ON-SITE WASH-OUT.
19. PREVENT THE DISCHARGE OF ANY TREATMENT OR RINSE WATERS FROM SURFACE FINISHING EFFORTS FOR ARCHITECTURAL COPPER, CEMENT, PLASTER, ETC., TO THE STORMWATER DRAINAGE SYSTEM OR ANY WATERWAY.
20. FOR EROSION CONTROL HYDROSEEDING MEASURES SEE PLANTING PLAN, SHEET L8.1.

SHEET LEGEND

PROPOSED	DESCRIPTION	
	LIMIT OF WORK	
	FILTER ROLL BARRIER	C -
	TEMPORARY CONSTRUCTION FENCING, REFER TO SPECIFICATIONS.	
	TEMPORARY CONCRETE WASHOUT FACILITY - PROVIDE A WASHOUT BIN FOR CONCRETE / CONSTRUCTION WASHOUT AND REMOVE AT END OF CONSTRUCTION.	A -
	CONSTRUCTION STAGING AREA	
	WHEEL WASH CONSTRUCTION ENTRY - STEEL PLATES	
PA	PLANTING AREA	
—	CITY STANDARD CONSTRUCTION SIGN AT CONSTRUCTION ACCESS, CONTRACTOR TO COORDINATE WITH THE CITY.	J - D1.3
	FILTER FABRIC TO BE SECURELY ATTACHED TO DRAINAGE STRUCTURE TOP.	B -

NORTH
0' 10' 20' 40' 60'

REGISTERED LANDSCAPE ARCHITECT
DEREK MARKHAM
No. 2499
Signature
EXPIRATION DATE: DEC. 2017
STATE OF CALIFORNIA

NO.	DESCRIPTION	DATE	BY

Revisions

WORK ACCEPTED: INSPECTOR:
BY: DATE:

DRAWN: RK/JL/QH DESIGN: CMES HOR: N/A
CHECKED: CMES / DM VERT: N/A
APPROVED: DATE: 12/15/16 JOB NUMBER: 135013
KARL D. BARRIE- CITY ENGINEER
RCE 39416 EXP. 12/31/2017

CITY OF MORGAN HILL
City of Morgan Hill
Public Works Department
17575 Peak Ave. Morgan Hill, CA 95037 (408)778-6480, Fax (408)779-7236

VERDE DESIGN
LANDSCAPE ARCHITECTURE
CIVIL ENGINEERING
SPORT PLANNING & DESIGN
2455 The Alameda, Ste. 200
Santa Clara, CA 95050
tel: 408.985.7200
fax: 408.985.7290
www.verdedesigninc.com

DEL MONTE AVE AND WEST 3RD STREET, MORGAN HILL, CA 95037

EROSION AND SEDIMENT CONTROL PLAN
HILLTOP PARK

FILE NUMBER: 1520400
PRINT DATE: 12/07/16
SHEET NUMBER: L2.1

BID DRAWINGS

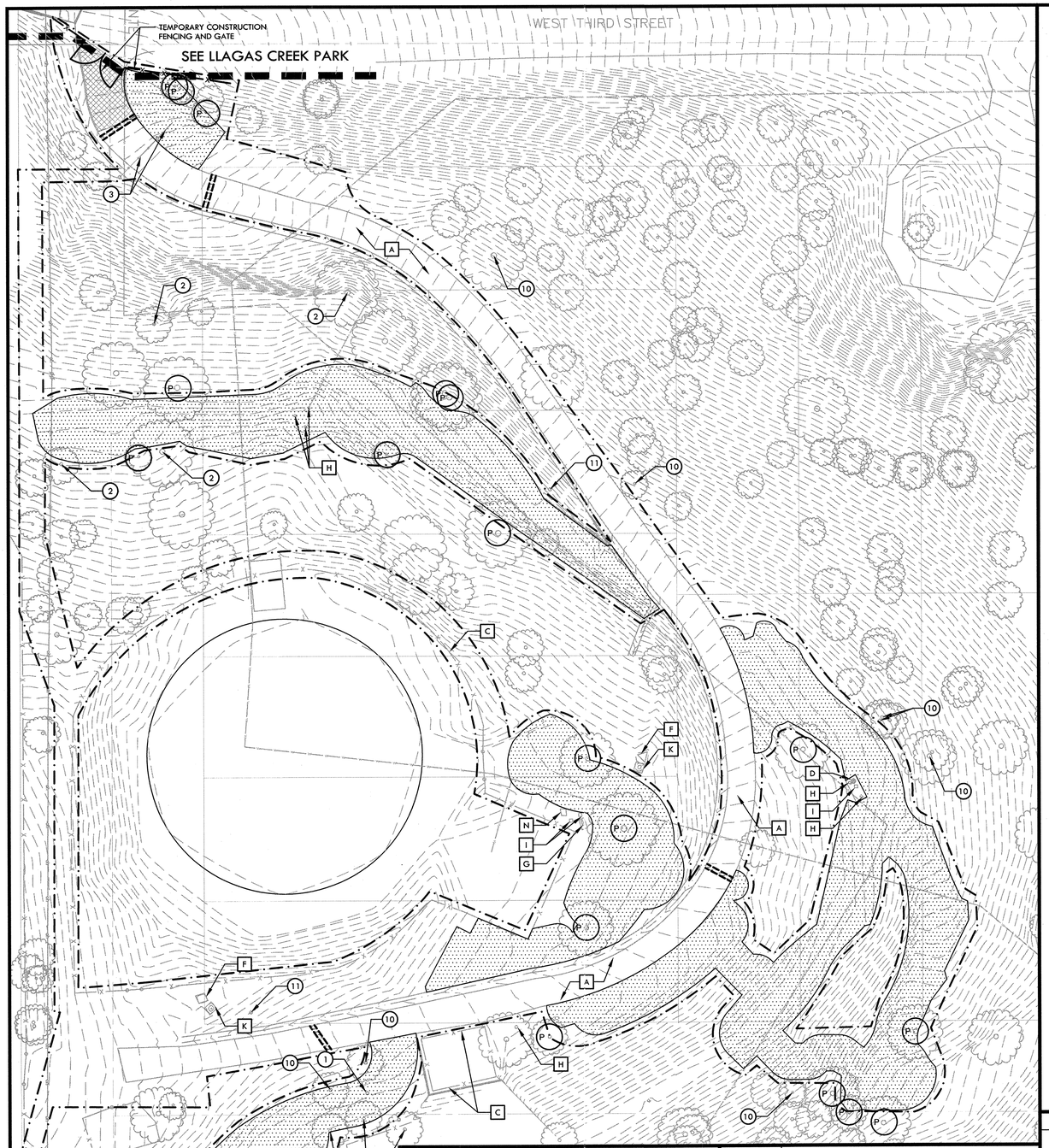

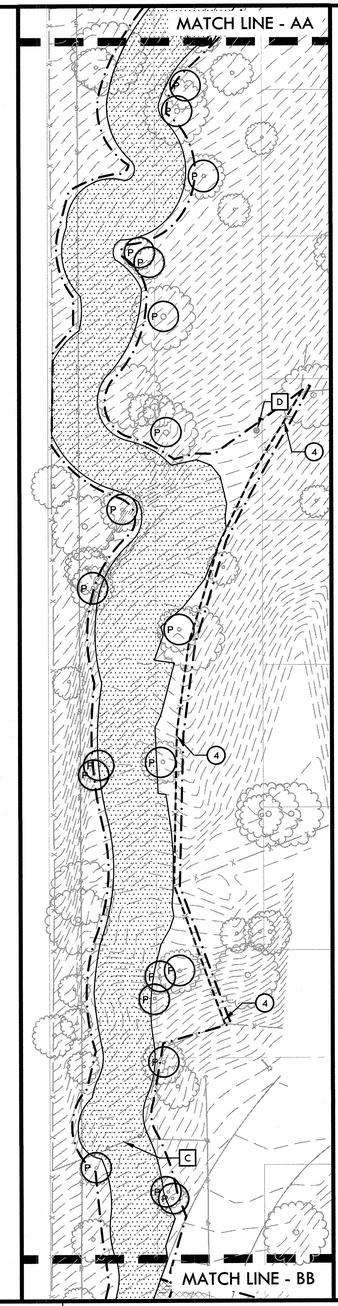

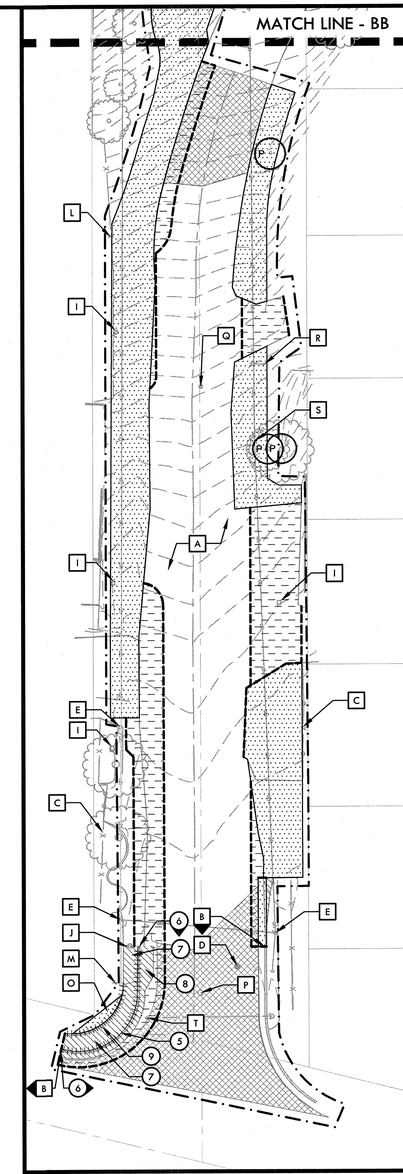

DEMOLITION NOTES

1. THE CONTRACTOR SHALL PERFORM ALL CLEARING, DEMOLITION, SITE PREPARATIONS AND REMOVAL OF OBSTRUCTIONS NECESSARY FOR THE PROPER EXECUTION OF ALL WORK CONTAINED IN THE CONTRACT DOCUMENTS.
2. THE CONTRACTOR SHALL VISIT THE SITE PRIOR TO BID SUBMITTAL TO DETERMINE THE EXACT EXTENT AND DEPTH OF SITE DEMOLITION REQUIRED AND VERIFY COMPLIANCE WITH DRAWINGS. THE OWNER'S REPRESENTATIVE SHALL BE NOTIFIED IMMEDIATELY OF ANY DISCREPANCIES.
3. THE CONTRACTOR SHALL VERIFY THE LOCATIONS OF ALL EXISTING UTILITIES, STRUCTURES, AND SERVICES BEFORE COMMENCING WORK. THE LOCATIONS OF UTILITIES, STRUCTURES, AND SERVICES SHOWN IN THE CONTRACT DOCUMENTS SHALL BE DEEMED TO BE APPROXIMATIONS ONLY. ALL DISCREPANCIES BETWEEN WHAT IS SHOWN AND THE ACTUAL FIELD CONDITIONS SHALL BE REPORTED TO THE OWNER'S REPRESENTATIVE. THE CONTRACTOR SHALL CONTACT UNDERGROUND SERVICE ALERT (USA) AT (800) 227-2600 PRIOR TO ANY DEMOLITION OR EXCAVATION. UPON COMPLETION OF USA MARKING OPERATIONS, THE CONTRACTOR SHALL RECORD ALL UTILITY MARKINGS ON A SEPARATE SET OF DRAWINGS AND BE PROVIDED TO OWNER AT COMPLETION OF CONSTRUCTION. THIS SET SHALL BE KEPT ON-SITE FOR REFERENCE FOR DURATION OF CONTRACT. NOTIFY THE OWNER IMMEDIATELY SHOULD CONFLICTS ARISE, AND REDIRECT WORK TO AVOID DELAY.
4. ALL EXISTING ITEMS ARE TO REMAIN UNLESS OTHERWISE NOTED. THE CONTRACTOR SHALL BE RESPONSIBLE FOR REPAIRING OR REPLACING, AT CONTRACTOR'S EXPENSE, ANY EXISTING ITEM DAMAGED OR DESTROYED BY CONSTRUCTION OPERATIONS. THE CONTRACTOR SHALL ALSO BE RESPONSIBLE FOR REPAIRING OR REPLACING ANY AND ALL DAMAGES TO ADJACENT PROPERTIES. THE DAMAGED ITEMS SHALL BE RESTORED TO AN "AS-WAS" OR BETTER CONDITION OR REPLACED PER THE DISCRETION OF THE OWNER.
5. PRIOR TO ANY DEMOLITION WORK, THE CONTRACTOR SHALL INSTALL SELF-SUPPORTING INTERLOCKING CHAIN-LINK TEMPORARY CONSTRUCTION FENCING TO ENCLOSE AND SECURE THE PROJECT AREA LIMIT OF WORK. THE FENCING SHALL CONTAIN PEDESTRIAN AND/OR VEHICULAR ACCESS GATES AS NECESSARY AND SHALL BE MINIMUM SIX (6) FEET HIGH, WITH A TOP AND BOTTOM RAIL KNUCKLED TOP AND BOTTOM SELVAGE (NO BARBED WIRE PERMITTED). THE CONSTRUCTION FENCING WORK SHALL BE SUBJECT TO THE DISCRETION OF THE OWNER.
6. PRIOR TO ANY DEMOLITION WORK, THE CONTRACTOR SHALL PROTECT ALL EXISTING PLANT MATERIALS NOT SCHEDULED FOR REMOVAL BY INSTALLING TEMPORARY FOUR (4) FOOT HIGH "BLAZE ORANGE" CONSTRUCTION SAFETY FENCING AT THE TREE DRIP LINES OR THE PERIMETER PERIMETER OF THE TREE GROUPINGS. THE FENCING SHALL BE SECURED WITH DRIVEN METAL STAKES. ALL TREE PROTECTION WORK SHALL BE SUBJECT TO THE DISCRETION OF THE OWNER.
7. THE CONTRACTOR SHALL PROVIDE THE REQUIRED COORDINATION OF ANY EXISTING UTILITY FOR ITS TEMPORARY DISCONNECTION, PROTECTION, REMOVAL AND/OR STORAGE AS MAY BE REQUIRED DURING CONSTRUCTION. THE CONTRACTOR SHALL COORDINATE WITH THE OWNER TO DETERMINE WHETHER TEMPORARY SERVICES ARE NECESSARY.
8. DEMOLITION SHALL INCLUDE THE REMOVAL OF DESIGNATED HARDSCAPE ITEMS AND ANY FOUNDATION OR STRUCTURAL SUPPORT RELATED TO THE ITEM. FOR PLANT MATERIAL, THIS SHALL INCLUDE STUMPS AND ROOTS OVER TWO (2) INCHES IN DIAMETER. REMOVAL SHALL INCLUDE DISPOSAL OFF-SITE IN A LEGAL MANNER ACCEPTABLE TO THE OWNER AND IN COMPLIANCE WITH ALL FEDERAL, STATE, AND LOCAL CODES AND ORDINANCES.
9. LOCATION OF THE UNDERGROUND UTILITIES IS AN APPROXIMATION AND SHOULD BE FIELD VERIFIED BY THE CONTRACTOR.
10. ANY (E) UTILITIES TO REMAIN SHALL RECEIVE A NEW UTILITY BOX IF LOCATED WITHIN LIMIT OF WORK.

DEMOLITION LEGEND

SYM	DESCRIPTION
	LIMIT OF WORK, REFER TO EROSION CONTROL PLAN
	TEMPORARY CONSTRUCTION FENCING - REFER TO SPECIFICATIONS.
	EXISTING AREA TO BE CLEARED AND GRUBBED - REFER TO SPECIFICATIONS.
	EXISTING ASPHALT PAVING TO BE DEMOLISHED AND REMOVED.
	EXISTING CONCRETE TO BE DEMOLISHED AND REMOVED.
	2" DEPTH SAW CUT AT EXISTING PAVING. EXISTING ASPHALT TO BE GROUND AS NECESSARY TO PROVIDE SMOOTH TRANSITION BETWEEN 2" LIFT OVER EXISTING ASPHALT AND FLUSH AT CONFORM TO EXISTING ASPHALT AS SHOWN.
	SAWCUT EXISTING PAVING
P	TREES TO REMAIN AND BE PROTECTED
—	CITY STANDARD CONSTRUCTION SIGN AT CONSTRUCTION ACCESS, CONTRACTOR TO COORDINATE WITH THE CITY. (J / D1.3)
ITEMS TO BE REMOVED	
1	EXISTING STUMP TO BE REMOVED.
2	TREE REMOVAL SHALL BE DETERMINED DURING PATH LAYOUT.
3	EXISTING GATE AND FENCE, INCLUDING FOOTING AND POST TO BE REMOVED.
4	EXISTING CHAIN LINK FENCE TO BE REMOVED.
5	EXISTING TRUNCATED DOME TO BE REMOVED.
6	EXISTING CURB AND GUTTER TO BE DEMOLISHED AND REMOVED.
7	EXISTING SIDEWALK TO BE DEMOLISHED AND REMOVED. CONTRACTOR SHALL SAWCUT AND DEMOLISH THE SIDEWALK TO THE NEAREST SCORE OR CONTROL JOINT.
8	EXISTING DROP INLET TO BE DEMOLISHED AND REMOVED. EXISTING DRAIN LINE TO BE CONNECTED TO PROPOSED DROP INLET.
9	EXISTING CURB TO BE DEMOLISHED AND REMOVED.
10	REMOVE TREE TO 6" ABOVE FINISH GRADE.
11	CUT STUMP DOWN TO 6" ABOVE FINISH GRADE.
ITEMS TO BE PROTECTED OR RELOCATED	
A	EXISTING PAVING TO REMAIN AND BE PROTECTED.
B	EXISTING CURB AND GUTTER TO REMAIN AND BE PROTECTED.
C	EXISTING FENCE AND GATE TO REMAIN AND BE PROTECTED.
D	EXISTING MONITORING WELL TO REMAIN AND BE PROTECTED.
E	EXISTING JOINT POLE TO REMAIN AND BE PROTECTED.
F	EXISTING CELL TOWER MONOPOLES TO REMAIN AND BE PROTECTED.
R	EXISTING POLE LIGHT TO REMAIN AND BE PROTECTED.
S	EXISTING TELEPHONE POLE TO REMAIN AND BE PROTECTED.
T	EXISTING WATER VALVE TO REMAIN AND BE PROTECTED, SEE DEMOLITION NOTE #10.
G	EXISTING BACK FLOW PREVENTER VALVE TO REMAIN AND BE PROTECTED.
H	EXISTING WATER VALVE TO REMAIN AND BE PROTECTED.
I	EXISTING WATER METER TO REMAIN AND BE PROTECTED.
J	EXISTING CABLE BOX TO REMAIN AND BE PROTECTED.
K	EXISTING TELEPHONE BOX TO REMAIN AND BE PROTECTED.
L	TEMPORARY CONSTRUCTION FENCE, CONTRACTOR TO COORDINATE ADJUSTING LOCATION WITH HOUSE CONTRACTOR.
M	EXISTING SIGN TO BE RELOCATED PER MATERIAL PLAN.
N	EXISTING IRRIGATION UTILITY TO REMAIN AND BE PROTECTED.
O	CONTRACTOR TO ADJUST IRRIGATION NECESSARY TO ENSURE CONTINUED OPERATION WITH NEW CONCRETE PAVING.
P	EXISTING MANHOLE TO REMAIN AND BE PROTECTED, SEE DEMOLITION NOTE #10.
Q	EXISTING CLEANOUT TO REMAIN AND BE PROTECTED, SEE DEMOLITION NOTE #10.

NORTH
0' 10' 20' 40' 60'

REGISTERED LANDSCAPE ARCHITECT
DERRICK MARCHI
No. 4141
Signature
EXPIRATION DATE: DEC. 2017
STATE OF CALIFORNIA

NO.	DESCRIPTION	DATE	BY

Revisions

WORK ACCEPTED: INSPECTOR:
BY: DATE:

DRAWN: RK/JL/QH
DESIGN: CMES
CHECKED: CMES / DM
APPROVED: KARL D. BLANKE - CITY ENGINEER RCE 39416 EXP. 12/31/2017
DATE: 12/15/16
HOR: N/A
VERT: N/A
JOB NUMBER: 135013

CITY OF MORGAN HILL
City of Morgan Hill
Public Works Department
17575 Peak Ave. Morgan Hill, CA 95037 (408)778-6480, Fax (408)779-7236

VERDE DESIGN
LANDSCAPE ARCHITECTURE
CIVIL ENGINEERING
SPORT PLANNING & DESIGN
2455 The Alameda. Ste. 200
Santa Clara, CA 95050
tel: 408.985.7200
fax: 408.985.7260
www.verdedesigninc.com

DEL MONTE AVE AND WEST 3RD STREET, MORGAN HILL, CA 95037

DEMOLITION PLAN
HILLTOP PARK

FILE NUMBER: 1520400
PRINT DATE: 12/07/16
SHEET NUMBER: L3.1

BID DRAWINGS

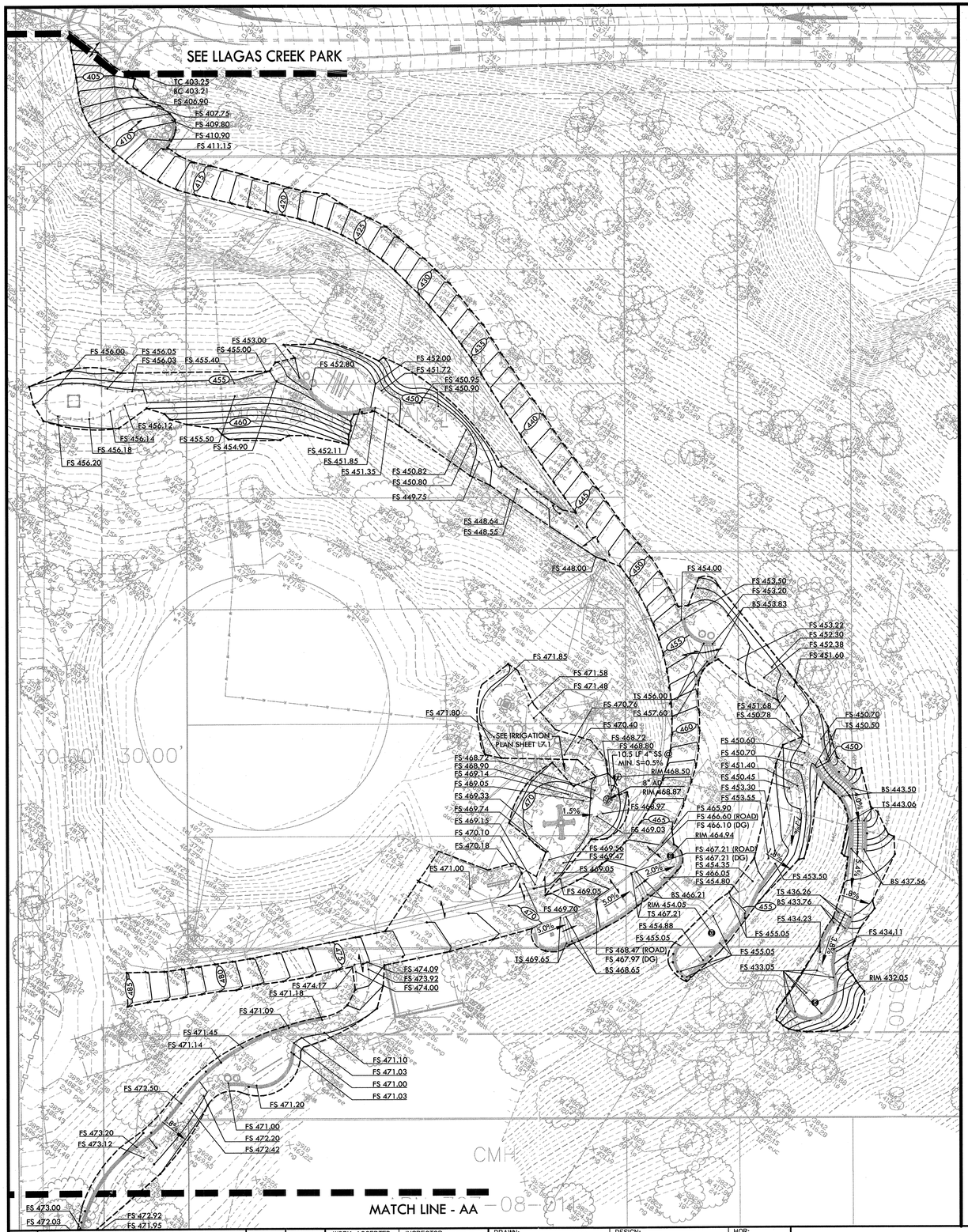

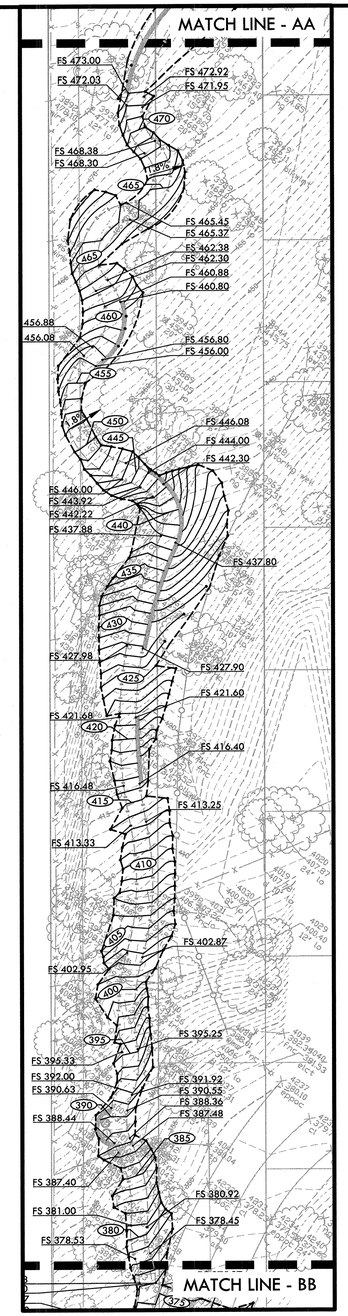

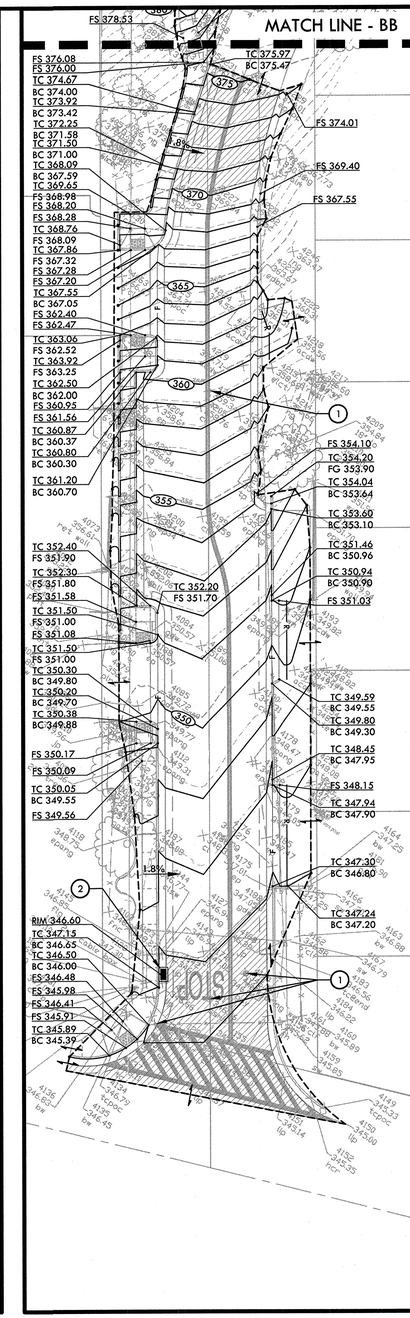

GRADING, DRAINAGE AND UTILITY NOTES

1. EXISTING GRADES ARE BASED ON INFORMATION PROVIDED BY: MH ENGINEERING CO. CONTRACTOR SHALL VERIFY EXISTING GRADES FOR ACCURACY PRIOR TO THE START OF GRADING, NOTIFY THE OWNER'S REPRESENTATIVE IMMEDIATELY SHOULD CONFLICTS ARISE AND REDIRECT WORK TO AVOID DELAY.
2. THE CONTRACTOR SHALL VERIFY THE LOCATIONS OF ALL EXISTING UTILITIES, STRUCTURES AND SERVICES BEFORE COMMENCING WORK. THE LOCATIONS OF UTILITIES, STRUCTURES AND SERVICES SHOWN IN THE CONTRACT DOCUMENTS SHALL BE DEEMED TO BE APPROXIMATIONS ONLY. ALL DISCREPANCIES BETWEEN WHAT IS SHOWN AND THE ACTUAL FIELD CONDITIONS SHALL BE REPORTED TO THE OWNER'S REPRESENTATIVE. THE CONTRACTOR SHALL CONTACT UNDER GROUND SERVICE ALERT (USA) AT (800) 227-2600 PRIOR TO ANY DEMOLITION OR EXCAVATION. UPON COMPLETION OF USA MARKING OPERATIONS, CONTRACTOR SHALL RECORD ALL UTILITY MARKINGS ON A SEPARATE SET OF DRAWINGS. THIS SET SHALL BE KEPT ON-SITE FOR REFERENCE FOR DURATION OF CONTRACT.
3. PROPOSED GRADES SHALL MEET EXISTING GRADES WITH A SMOOTH AND CONTINUOUS TRANSITION SO AS TO AVOID TRAPPING WATER. CONTRACTOR SHALL NOTIFY OWNER'S REPRESENTATIVE IF PUDDLING IS SUSPECTED AND REDIRECT WORK SO AS TO AVOID DELAY WHILE AWAITING RESPONSE.
4. ALL EXISTING STRUCTURES, BOXES, UTILITY VAULTS ETC. TO REMAIN, SHALL BE BROUGHT TO FINAL FINISH GRADE PRIOR TO FINAL SURFACE TREATMENT.
5. WHEN WORK HAS TO OCCUR UNDER THE DRIPLINE OF EXISTING TREES NOT SCHEDULED FOR REMOVAL, THE CONTRACTOR SHALL USE ALL POSSIBLE CARE TO AVOID INJURY TO THE TREES AND TREE ROOTS. GRADE IN LINES RADIAL TO THE EXISTING TREES RATHER THAN TANGENTIAL. ALL PARTIAL CUTS OR TEARS THROUGH ROOTS TWO INCHES IN DIAMETER AND LARGER SHALL BE CUT CLEAN. TRENCHES ADJACENT TO TREES SHALL BE FILLED WITHIN 24 HOURS AFTER EXCAVATION, BUT WHERE THIS IS NOT POSSIBLE, THE SIDE OF THE TRENCH ADJACENT TO THE TREE, AND ANY EXPOSED ROOTS SHALL BE KEPT SHADED AND MOIST WITH DAMPENED BURLAP OR CANVAS.
6. EXISTING UTILITY SERVICES TO SURROUNDING AREAS AND USERS ARE TO BE MAINTAINED AT ALL TIMES.
7. FOR TOP OF MODULAR UNIT WALL ELEVATION, WHICH VARIES, SEE DETAILS L ,M, N, AND O/D1.3. MAXIMUM ONE AND A HALF VERSA-BLOCK UNIT EXPOSED AT ADJACENT FINISH SURFACE.

GRADING LEGEND

SYM	DESCRIPTION	DTL REF
450	PROPOSED CONTOUR	
FS 11.4	PROPOSED FINISH SURFACE ELEVATION OF HARDSCAPE	
FG 15.0	PROPOSED FINISH GRADE ELEVATION OF SOFTSCAPE	
TC 10.5	TOP OF CURB	
TS 13.5 / BS 13.0	TOP OF STAIRS / BOTTOM OF STAIRS	
	EXISTING CONTOUR	
11.1	EXISTING ELEVATION	
	CONFORM TO EXISTING GRADE	
	LIMIT OF GRADING - CONFORM TO EXISTING GRADES AT THIS LINE	
	DRYWELL WITH DRAIN INLET	D / D1.4
	DRYWELL - DRINKING FOUNTAIN	E / D1.4
	DROP INLET	D / D2.1
	BRASS FLOOR DRAIN IN PAVING	K / D1.3
1	RIM ELEVATION TO BE ADJUSTED PER NEW PAVEMENT	
2	TIE EXISTING STORM DRAIN PIPE INTO NEW DROP INLET. CONNECTION PIPE TO HAVE A MINIMUM 0.5% SLOPE.	
F	FLOW LINE	
R	RIDGE LINE	
SS	SANITARY SEWER PIPE - SEE SPECIFICATIONS, SIZE PER PLAN.	
	AREA OF ASPHALT GRINDING TO PREPARE FOR INSTALLATION OF 2" LIFT, SEE DEMOLITION PLAN L3.1	

NORTH

0' 10' 20' 40' 60'

REGISTERED LANDSCAPE ARCHITECT — DIREK WIKRE — 4148 — Signature — EXPIRATION DATE: DEC. 2017 — STATE OF CALIFORNIA

NO.	DESCRIPTION	DATE	BY

Revisions

WORK ACCEPTED: INSPECTOR:
BY: DATE:

DRAWN: RK/JL/QH | DESIGN: CMES | HOR: N/A
CHECKED: CMES / DM | VERT: N/A
APPROVED: K Blake | DATE: 12/15/16 | JOB NUMBER: 135013
KARL D. BLAKE - CITY ENGINEER RCE 39416 EXP. 12/31/2017

CITY OF MORGAN HILL
City of Morgan Hill
Public Works Department
17575 Peak Ave. Morgan Hill, CA 95037 (408)778-6480, Fax (408)779-7236

VERDE DESIGN
LANDSCAPE ARCHITECTURE CIVIL ENGINEERING SPORT PLANNING & DESIGN
2455 The Alameda, Ste. 200 Santa Clara, CA 95050 tel: 408.985.7200 fax: 408.985.7260 www.verdedesigninc.com

DEL MONTE AVE AND WEST 3RD STREET, MORGAN HILL, CA 95037

GRADING AND DRAINAGE PLAN
HILLTOP PARK

FILE NUMBER: 1520400
PRINT DATE: 12/07/16
SHEET NUMBER: L4.1

BID DRAWINGS

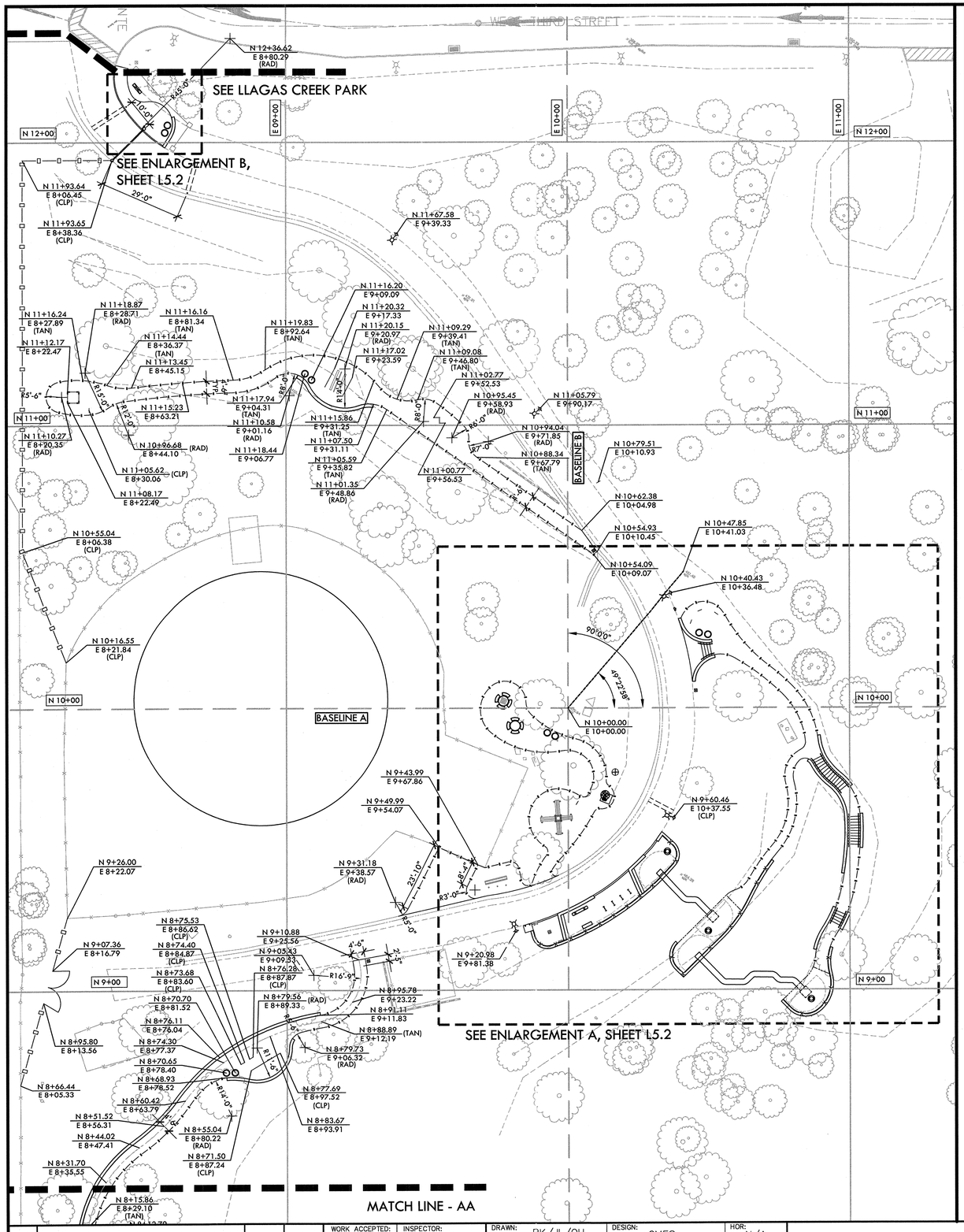

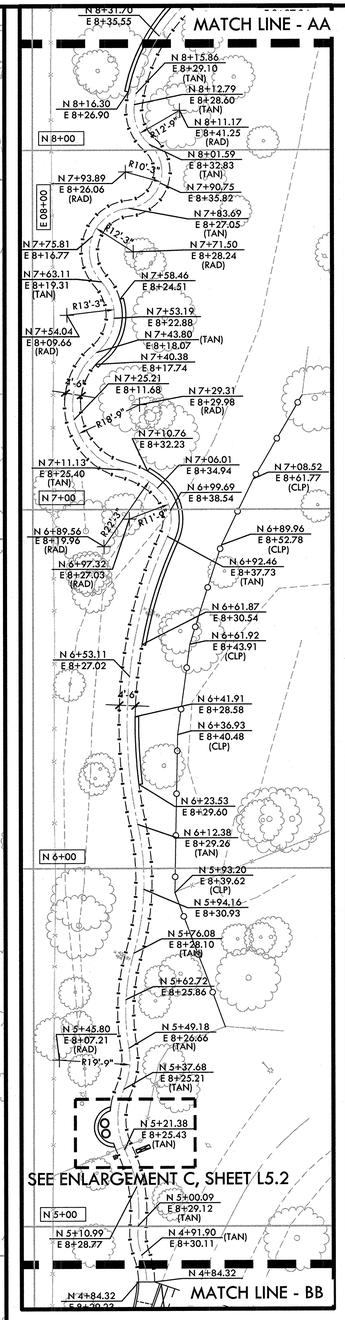

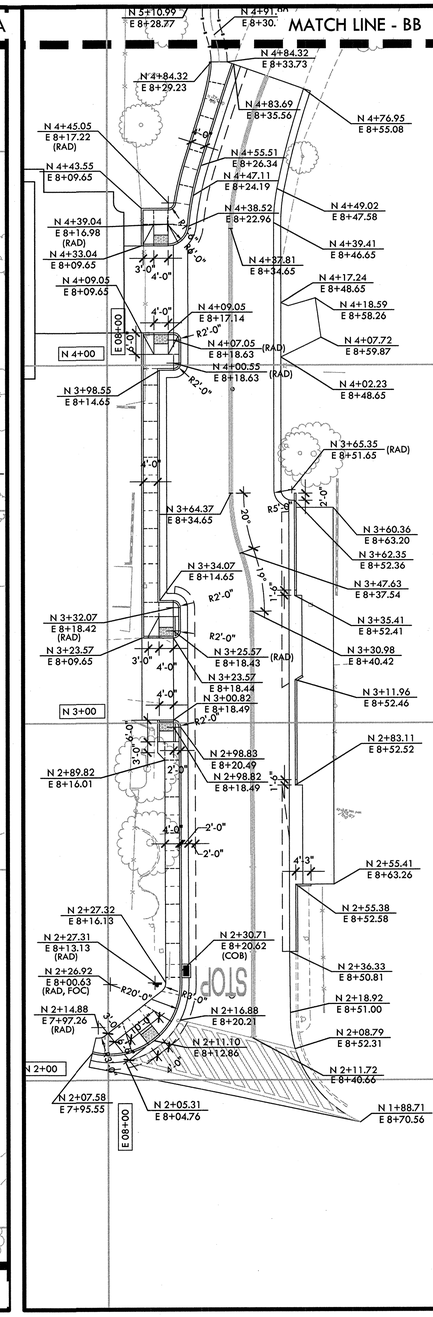

LAYOUT NOTES

1. THE CONTRACTOR SHALL COORDINATE ALL CONSTRUCTION ELEMENTS INCLUDING UTILITY LOCATIONS AND REQUIRED SLEEVING PRIOR TO INSTALLATION. VERIFY CRITICAL DIMENSIONS, REFERENCE POINT LOCATIONS AND CONSTRUCTION CONDITIONS PRIOR TO INITIATING CONSTRUCTION. TEMPORARY BENCHMARKS OR REFERENCE POINTS SHALL BE SET BY THE CONTRACTOR AS NECESSARY. NOTIFY THE OWNER'S REPRESENTATIVE IMMEDIATELY SHOULD DISCREPANCY ARISE AND REDIRECT WORK TO AVOID DELAYS.
2. ALL DIMENSIONS SHALL BE VERIFIED IN FIELD AND CHALKED, STRING LINED OR FLAGGED BY THE CONTRACTOR PRIOR TO CONSTRUCTION. ANY MINOR ADJUSTMENTS MADE TO ACHIEVE OVERALL DESIGN LAYOUT SHALL BE ACCEPTED BY THE OWNER PRIOR TO CONSTRUCTION.
3. LAYOUT IS BASED ON THE POINT(S) OF BEGINNING (P.O.B.) AND BASELINE(S) OR GRID SYSTEM AS SHOWN. DIMENSIONS SHOWN ARE ROUNDED TO THE NEAREST INCH.
4. ALL LAYOUT AND GRADES SHALL BE COMPLETED BY A LICENSED SURVEYOR.

LAYOUT LEGEND

SYM	DESCRIPTION
POB	POINT OF BEGINNING - SPIKE
	ANCHOR POINT FOR BASELINE A - SPIKE
	RADIUS POINT / CENTER MARK
90°	PROPOSED ANGLE BETWEEN ELEMENTS
ALIGN	ALIGN EDGES OF ELEMENTS
	CENTER LINES
	BASELINE
	CONTROL LINE
N 6+21.95 E 4+97.08	NORTHING/EASTING LAYOUT COORDINATE CALLOUT
(CLP)	CENTERLINE OF POST OR POLE
(COB)	CENTER OF BASIN / DRAINAGE / UTILITY STRUCTURE
(FOC)	FACE OF CURB
(RAD)	RADIUS POINT
(TAN)	TANGENT POINT

P.O.B. (POINT OF BEGINNING) - CONTROL LINE 'A' TO BE FROM POINT OF BEGINNING SPK 470.94 TO SPK 451.48. BASELINE 'A' IS 49°22'58" FROM CONTROL LINE 'A' AT POINT OF BEGINNING. BASELINE 'B' IS 90° FROM BASELINE 'A'. FOR EXACT LOCATION OF CONTROL POINT 'A' AND POINT OF BEGINNING, CONTRACTOR TO VERIFY IN FIELD.

NORTH

0' 10' 20' 40' 60'

REGISTERED LANDSCAPE ARCHITECT
DEREK MCKEE
No. 4148
SIGNATURE
EXPIRATION DATE: DEC. 2017
STATE OF CALIFORNIA

NO.	DESCRIPTION	DATE	BY

Revisions

WORK ACCEPTED: INSPECTOR:
BY: DATE:

DRAWN: RK/JL/QH
DESIGN: CMES
CHECKED: CMES / DM
APPROVED: K. Bueno
DATE: 12/15/16
KARL D. BUENO - CITY ENGINEER
RCE 38416 EXP. 12/31/2017

HOR: N/A
VERT: N/A
JOB NUMBER: 135013

CITY OF MORGAN HILL

City of Morgan Hill
Public Works Department
17575 Peak Ave. Morgan Hill, CA 95037 (408)778-6480, Fax (408)779-7236

VERDE DESIGN
LANDSCAPE ARCHITECTURE
CIVIL ENGINEERING
SPORT PLANNING & DESIGN
2455 The Alameda, Ste. 200
Santa Clara, CA 95050
tel: 408.985.7200
fax: 408.985.7200
www.verdedesigninc.com

DEL MONTE AVE AND WEST 3RD STREET, MORGAN HILL, CA 95037

LAYOUT PLAN
HILLTOP PARK

FILE NUMBER: 1520400
PRINT DATE: 12/07/16
SHEET NUMBER: L5.1

BID DRAWINGS

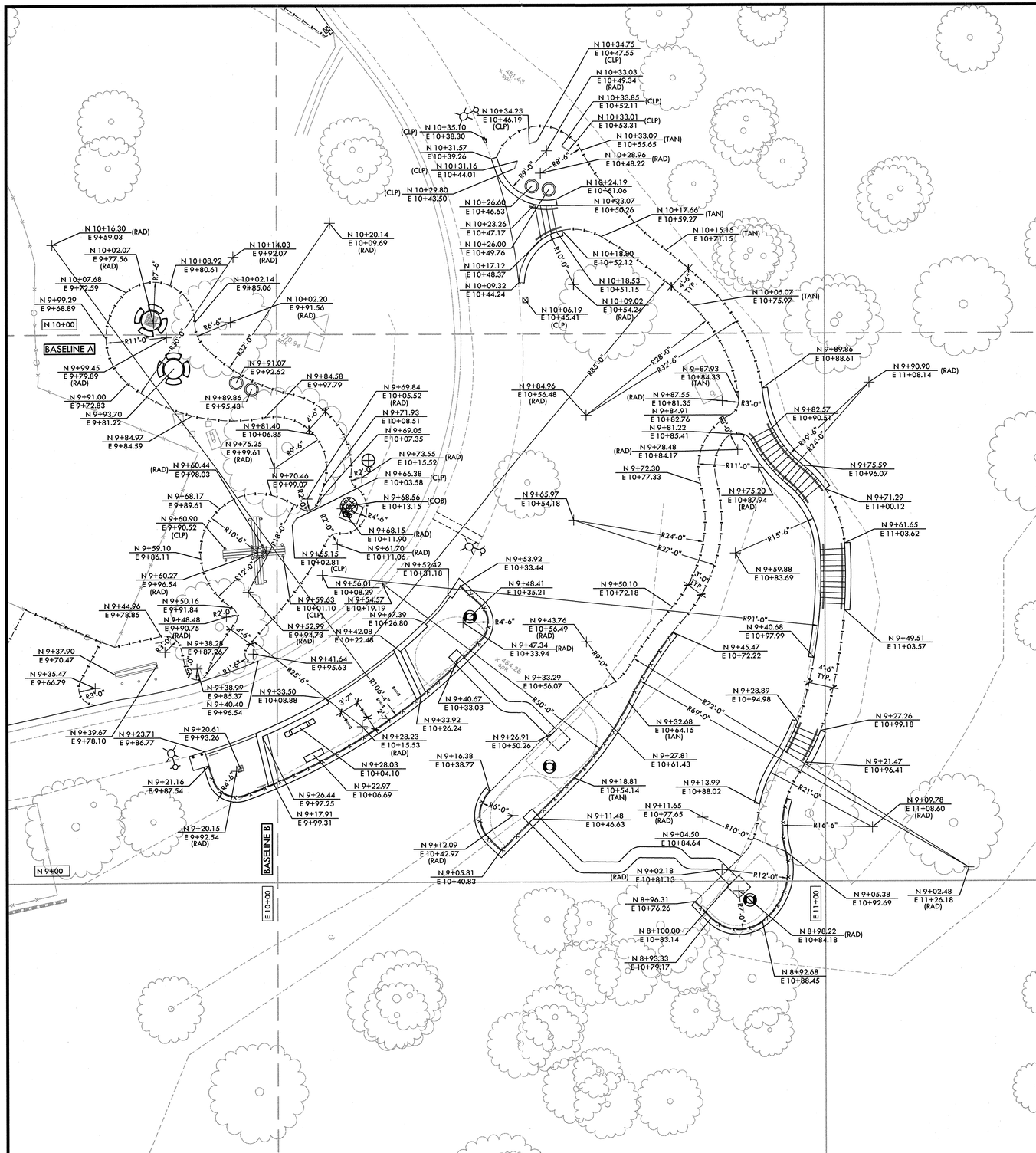

ENLARGEMENT A SCALE: 1"=10'-0"

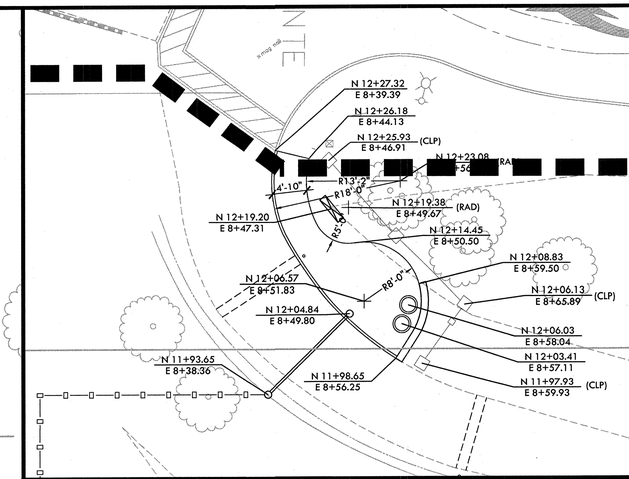

ENLARGEMENT B SCALE: 1"=10'-0"

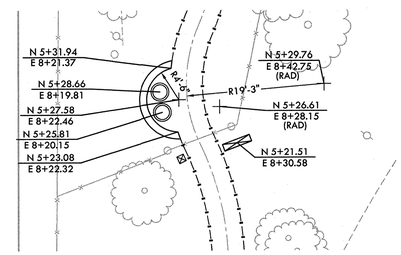

ENLARGEMENT C SCALE: 1"=10'-0"

LAYOUT NOTES

1. THE CONTRACTOR SHALL COORDINATE ALL CONSTRUCTION ELEMENTS INCLUDING UTILITY LOCATIONS AND REQUIRED SLEEVING PRIOR TO INSTALLATION. VERIFY CRITICAL DIMENSIONS, REFERENCE POINT LOCATIONS AND CONSTRUCTION CONDITIONS PRIOR TO INITIATING CONSTRUCTION. TEMPORARY BENCHMARKS OR REFERENCE POINTS SHALL BE SET BY THE CONTRACTOR AS NECESSARY. NOTIFY THE OWNER'S REPRESENTATIVE IMMEDIATELY SHOULD DISCREPANCY ARISE AND REDIRECT WORK TO AVOID DELAYS.
2. ALL DIMENSIONS SHALL BE VERIFIED IN FIELD AND CHALKED, STRING LINED OR FLAGGED BY THE CONTRACTOR PRIOR TO CONSTRUCTION. ANY MINOR ADJUSTMENTS MADE TO ACHIEVE OVERALL DESIGN LAYOUT SHALL BE ACCEPTED BY THE OWNER PRIOR TO CONSTRUCTION.
3. LAYOUT IS BASED ON THE POINT(S) OF BEGINNING (P.O.B.) AND BASELINE(S) OR GRID SYSTEM AS SHOWN. DIMENSIONS SHOWN ARE ROUNDED TO THE NEAREST INCH.
4. ALL LAYOUT AND GRADES SHALL BE COMPLETED BY A LICENSED SURVEYOR.

LAYOUT LEGEND

SYM	DESCRIPTION
POB	POINT OF BEGINNING - SPIKE
	ANCHOR POINT FOR BASELINE A - SPIKE
	RADIUS POINT / CENTER MARK
90°	PROPOSED ANGLE BETWEEN ELEMENTS
ALIGN	ALIGN EDGES OF ELEMENTS
	CENTER LINES
	BASELINE
	CONTROL LINE
N 6+21.95 / E 4+97.08	NORTHING/EASTING LAYOUT COORDINATE CALLOUT
(CLP)	CENTERLINE OF POST OR POLE
(COB)	CENTER OF BASIN / DRAINAGE / UTILITY STRUCTURE
(FOC)	FACE OF CURB
(RAD)	RADIUS POINT
(TAN)	TANGENT POINT

P.O.B. (POINT OF BEGINNING) - CONTROL LINE 'A' TO BE FROM POINT OF BEGINNING SPK 470.94 TO SPK 451.48. BASELINE 'A' IS 49°22'58" FROM CONTROL LINE 'A' AT POINT OF BEGINNING. BASELINE 'B' IS 90° FROM BASELINE 'A'. FOR EXACT LOCATION OF CONTROL POINT 'A' AND POINT OF BEGINNING, CONTRACTOR TO VERIFY IN FIELD.

NORTH

0' 10' 20' 40' 60'

REGISTERED LANDSCAPE ARCHITECT
CHRIS MCKEE
No. 4435
Signature
EXPIRATION DATE: DEC. 2017
STATE OF CALIFORNIA

NO.	DESCRIPTION	DATE	BY

Revisions

WORK ACCEPTED: INSPECTOR:
BY: DATE:

DRAWN: RK/JL/QH
DESIGN: CMES
CHECKED: CMES / DM
APPROVED: KBarr
DATE: 12/15/16
KARL D. BARRE – CITY ENGINEER
RCE 32415 EXP. 12/31/2017

HOR: N/A
VERT: N/A
JOB NUMBER: 135013

CITY OF MORGAN HILL
City of Morgan Hill
Public Works Department
17575 Peak Ave. Morgan Hill, CA 95037 (408)778-6480, Fax (408)779-7236

VERDE DESIGN
LANDSCAPE ARCHITECTURE
CIVIL ENGINEERING
SPORT PLANNING & DESIGN
2455 The Alameda, Ste. 200
Santa Clara, CA 95050
tel: 408.985.7200
fax: 408.985.7260
www.verdedesigninc.com

DEL MONTE AVE AND WEST 3RD STREET, MORGAN HILL, CA 95037

LAYOUT PLAN
HILLTOP PARK

FILE NUMBER: 1520400
PRINT DATE: 12/07/16
SHEET NUMBER: L5.2

BID DRAWINGS

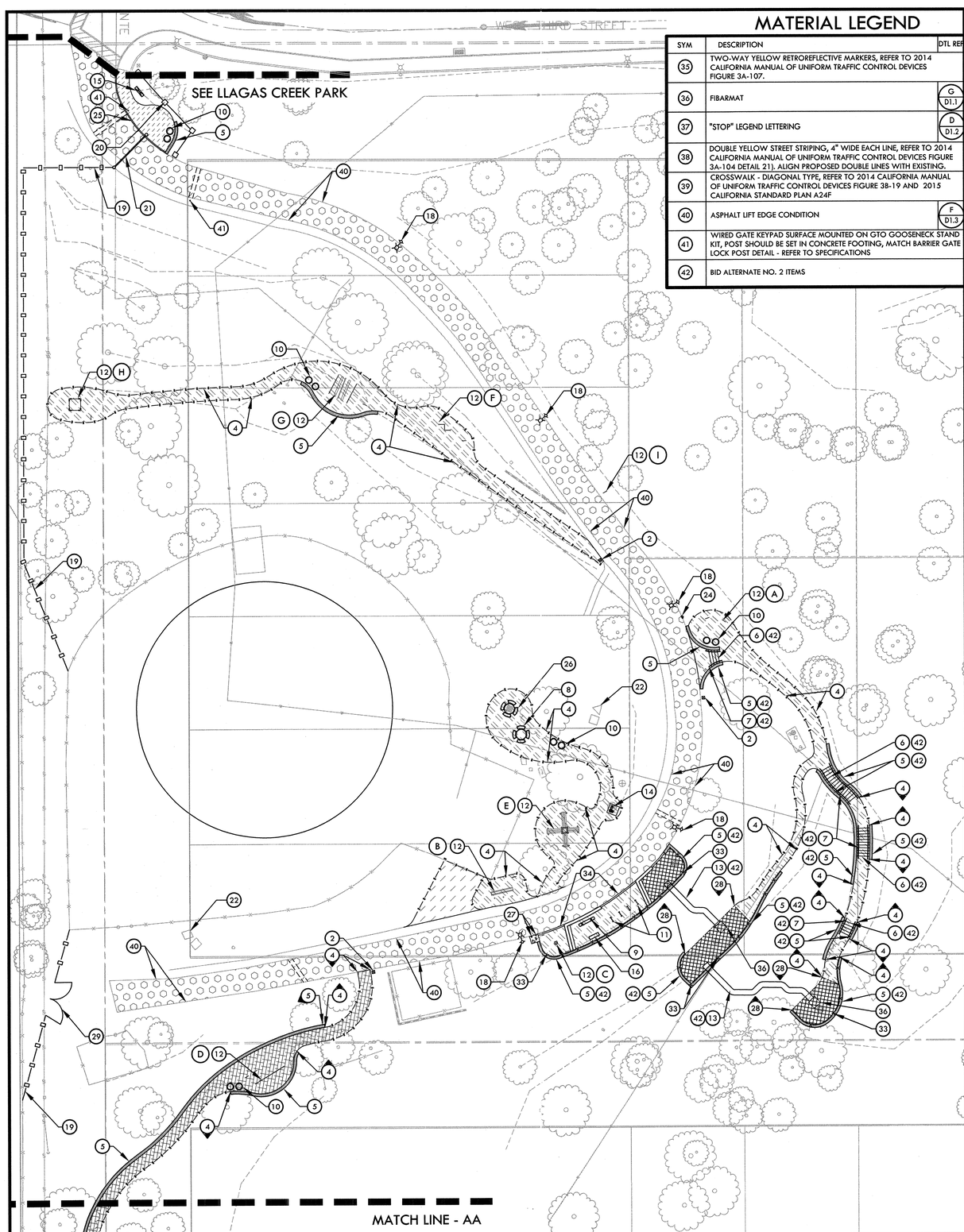

MATERIAL LEGEND

SYM	DESCRIPTION	DTL REF
35	TWO-WAY YELLOW RETROREFLECTIVE MARKERS, REFER TO 2014 CALIFORNIA MANUAL OF UNIFORM TRAFFIC CONTROL DEVICES FIGURE 3A-107.	
36	FIBARMAT	G D1.1
37	"STOP" LEGEND LETTERING	D D1.2
38	DOUBLE YELLOW STREET STRIPING, 4" WIDE EACH LINE, REFER TO 2014 CALIFORNIA MANUAL OF UNIFORM TRAFFIC CONTROL DEVICES FIGURE 3A-104 DETAIL 21). ALIGN PROPOSED DOUBLE LINES WITH EXISTING.	
39	CROSSWALK - DIAGONAL TYPE, REFER TO 2014 CALIFORNIA MANUAL OF UNIFORM TRAFFIC CONTROL DEVICES FIGURE 3B-19 AND 2015 CALIFORNIA STANDARD PLAN A24F	
40	ASPHALT LIFT EDGE CONDITION	F D1.3
41	WIRED GATE KEYPAD SURFACE MOUNTED ON GTO GOOSENECK STAND KIT, POST SHOULD BE SET IN CONCRETE FOOTING, MATCH BARRIER GATE LOCK POST DETAIL - REFER TO SPECIFICATIONS	
42	BID ALTERNATE NO. 2 ITEMS	

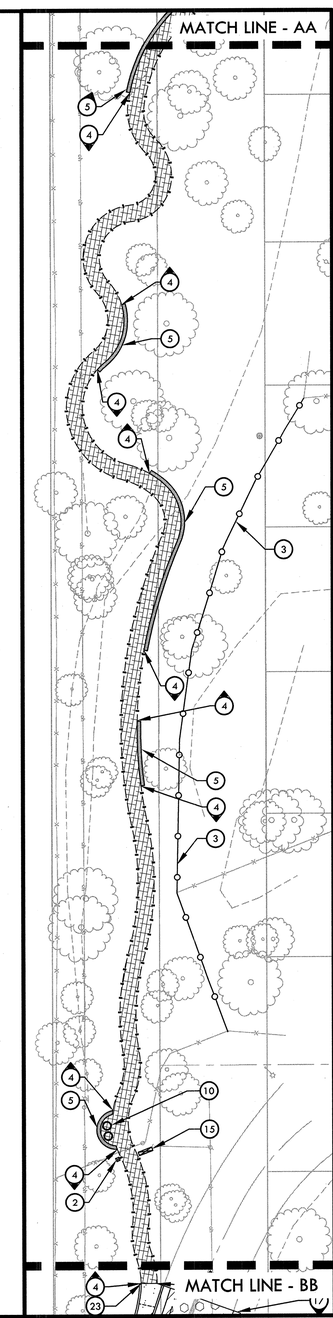

SYM	DESCRIPTION	DTL REF
29	12' WIDE VEHICULAR GATE	J D1.2
30	TRUNCATED DOME - REFER TO SPECIFICATIONS	M D1.4
31	RELOCATED STOP SIGN AND STREET SIGN	
32	VALLEY GUTTER	B D1.1
33	GUARDRAIL	K D1.4
34	6" WIDE CONCRETE CURB	F D1.4

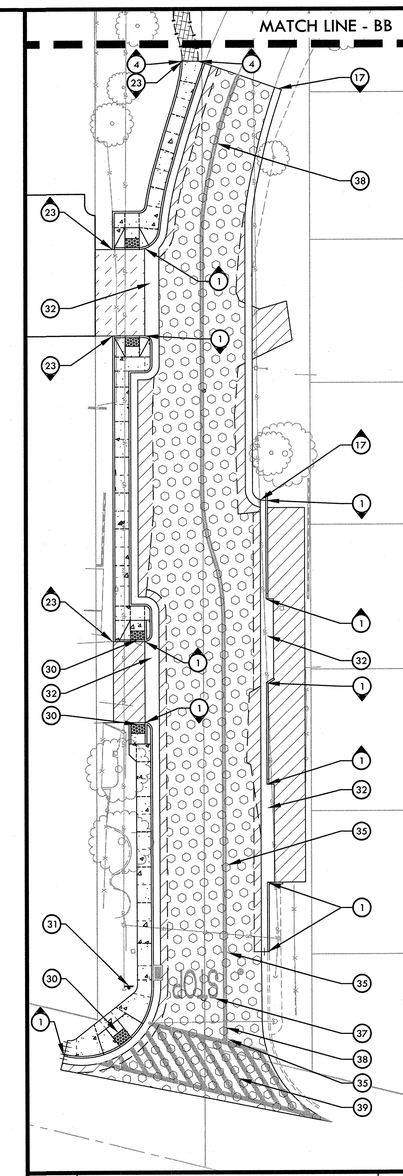

SYM	DESCRIPTION	DTL REF
19	5' CHAINLINK FENCE, CONNECT TO EXISTING FENCE	I D1.2
20	POST AND RAIL FENCE	K D1.2
21	AUTOMATIC VEHICLE GATE WITH KEYPAD CONTROL - REFER TO SPECIFICATIONS, TO BE INSTALLED PER MANUFACTURE'S DETAILS	G D1.2
22	EXISTING CELL TOWER MONOPOLES TO REMAIN AND BE PROTECTED.	
23	7 1/2" RETAINING CURB	B D1.1
24	PET WASTE STATION - REFER TO SPECIFICATIONS	L D1.4
25	4" WHITE STRIPING - REFER TO SPECIFICATIONS	
26	PICNIC TABLES WITH GAMEBOARD - REFER TO SPECIFICATIONS	
27	REMOVABLE BOLLARD - REFER TO SPECIFICATIONS	N D1.4
28	FIBAR EDGE AT PLANTING AREA	C D1.4

MATERIAL NOTES

1. THE CONTRACTOR SHALL COORDINATE ALL CONSTRUCTION ELEMENTS INCLUDING UTILITY LOCATIONS AND REQUIRED SLEEVING PRIOR TO INSTALLATION. VERIFY CRITICAL DIMENSIONS, REFERENCE POINT LOCATIONS AND CONSTRUCTION CONDITIONS PRIOR TO INITIATING CONSTRUCTION. TEMPORARY BENCHMARKS OR REFERENCE POINTS SHALL BE SET BY THE CONTRACTOR AS NECESSARY. NOTIFY THE OWNER'S REPRESENTATIVE IMMEDIATELY SHOULD DISCREPANCY ARISE AND REDIRECT WORK TO AVOID DELAYS.
2. THE INTERFACE OF ALL PROPOSED IMPROVEMENTS TO EXISTING SITE SHALL CONFORM AND BE SMOOTH AND UNIFORM.
3. ALL REINFORCING AND FORMS SHALL BE SECURED IN PLACE AND ACCEPTED BY OWNER'S REPRESENTATIVE PRIOR TO PLACING ANY CONCRETE.
4. CONCRETE FINISHES SHALL BE AS NOTED. CONTRACTOR SHALL PROVIDE 4'X4' SAMPLES OF ALL SPECIFIED FINISHES OF CONCRETE USING THE SAME MATERIALS THAT WILL BE USED IN THE ACTUAL CONSTRUCTION FOR EACH TYPE SPECIFIED. SAMPLES SHALL BE PREPARED WELL ENOUGH IN ADVANCE OF SCHEDULED CONCRETE POUR TO ALLOW FOR REVIEW AND POSSIBLE RE-POURING OF UNACCEPTABLE SAMPLES. UNACCEPTABLE SAMPLES SHALL BE RE-PREPARED UNTIL ACCEPTED BY THE OWNER'S REPRESENTATIVE. ACCEPTED SAMPLES SHALL BE PROTECTED AND REMAIN ON SITE FOR REFERENCE UNTIL FINAL ACCEPTANCE.
5. ASPHALT SHALL NOT BE INSTALLED UNTIL ALL CONCRETE CURBS AND CONCRETE PAVING IS INSTALLED.
6. CONTRACTOR SHALL PROVIDE SURFACE PREPARATION OF EXISTING ASPHALT BEFORE NEW LIFT IS INSTALLED OVER EXISTING ROAD, PER SECTION 5 OF CURRENT CALTRANS STANDARD SPECIFICATIONS.

MATERIAL LEGEND

SYM	DESCRIPTION	DTL REF
	ASPHALT PAVING- PEDESTRIAN	A D1.3
	ASPHALT PAVING - VEHICULAR - TO BE INSTALLED BEFORE NEW LIFT INSTALLED OVER EXISTING ROAD	B D1.3
	ASPHALT PAVEMENT TRANSITION - TO BE INSTALLED BEFORE NEW LIFT INSTALLED OVER EXISTING ROAD	D D1.3
	ASPHALT PAVING - 2" LIFT	C D1.3
	CONCRETE PAVING - PEDESTRIAN	H D1.3
	STABILIZED DECOMPOSED GRANITE - REFER TO SPECIFICATIONS	E D1.1
	FIBAR SURFACING WITH RUBBER PAD- REFER TO SPECIFICATIONS	
	RESIN PAVEMENT PAVING	B D1.4
	SCORE JOINT DEEP SCORE JOINT EXPANSION JOINT	D D1.1
	DOWEL JOINT	G D1.3
1	CONCRETE CURB AND GUTTER	B D1.1
2	TRAIL MARKER - REFER TO SPECIFICATIONS	F D1.1
3	EXISTING FENCE TO BE REPLACED WITH NEW CHAIN LINK FENCE WITH SLATS, CONNECT TO EXISTING FENCE	
4	REDWOOD HEADER	E D1.1 C D1.2 C D1.4
5	VERSA-LOK MASONRY UNIT STACKED STONE RETAINING WALLS	LM D1.3
6	VERSA-LOK MASONRY UNIT STEPS	N D1.3
7	HANDRAIL	O D1.3 I D1.4
8	PICNIC TABLES - REFER TO SPECIFICATIONS	
9	BENCHES WITHOUT BACK - REFER TO SPECIFICATIONS	
10	TRASH AND RECYCLING RECEPTACLES - REFER TO SPECIFICATIONS	G D1.4
11	BIKE RACKS - PROVIDED BY CITY - REFER TO SPECIFICATIONS	I D1.3
12	OUTDOOR FITNESS EQUIPMENT (A-I) - COLUMBIA CASCADE - REFER TO SPECIFICATIONS	
13	SLIDE - BID ALTERNATE NO. 2 - COLUMBIA CASCADE - TO BE INSTALLED AS PER MANUFACTURER'S DETAILS	- S3.1-D3
14	DRINKING FOUNTAIN, WATER BOTTLE FILLING STATION AND PET STATION AND DRYWELL - REFER TO SPECIFICATIONS	K D1.3
15	KIOSK WITH PARK AND CITY INFORMATION - REFER TO SPECIFICATIONS	E D1.2
16	INFORMATIONAL SIGNAGE ON CITY HISTORY, VIEW TO GRANADA, ETC.	E D1.2
17	ASPHALT SWALE	J D1.3
18	POLE LIGHT - REFER TO ELECTRICAL PLANS	

NORTH

0' 10' 20' 40' 60'

REGISTERED LANDSCAPE ARCHITECT
DIREK MCREE
No. 4148
Signature
EXPIRATION DATE: DEC. 2017
STATE OF CALIFORNIA

NO.	DESCRIPTION	DATE	BY

Revisions

WORK ACCEPTED: INSPECTOR:
BY: DATE:

DRAWN: RK/JL/QH DESIGN: CMES HOR: N/A
CHECKED: CMES / DM VERT: N/A
APPROVED: DATE: 12/15/16 JOB NUMBER: 135013
KARL D. BARKI — CITY ENGINEER RCE 39416 EXP. 12/31/2017

CITY OF MORGAN HILL
City of Morgan Hill
Public Works Department
17575 Peak Ave. Morgan Hill, CA 95037 (408)778-6480, Fax (408)779-7236

VERDE DESIGN
LANDSCAPE ARCHITECTURE
CIVIL ENGINEERING
SPORT PLANNING & DESIGN
2455 The Alameda, Ste. 200
Santa Clara, CA 95050
tel: 408.985.7200
fax: 408.985.7260
www.verdedesigninc.com

DEL MONTE AVE AND WEST 3RD STREET, MORGAN HILL, CA 95037

MATERIAL AND DETAIL REFERENCE PLAN
HILLTOP PARK

FILE NUMBER: 1520400
PRINT DATE: 12/07/16
SHEET NUMBER: L6.1

BID DRAWINGS

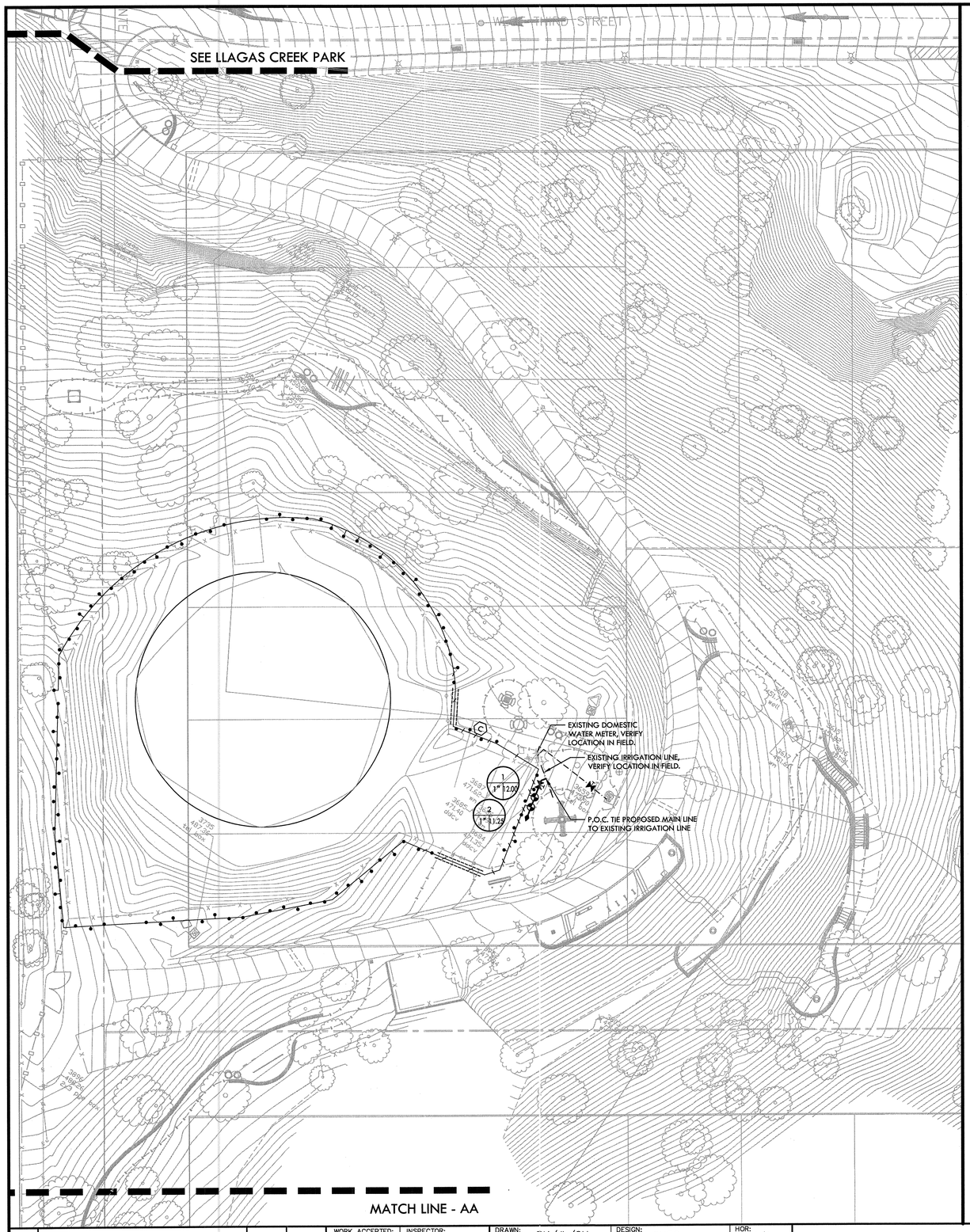

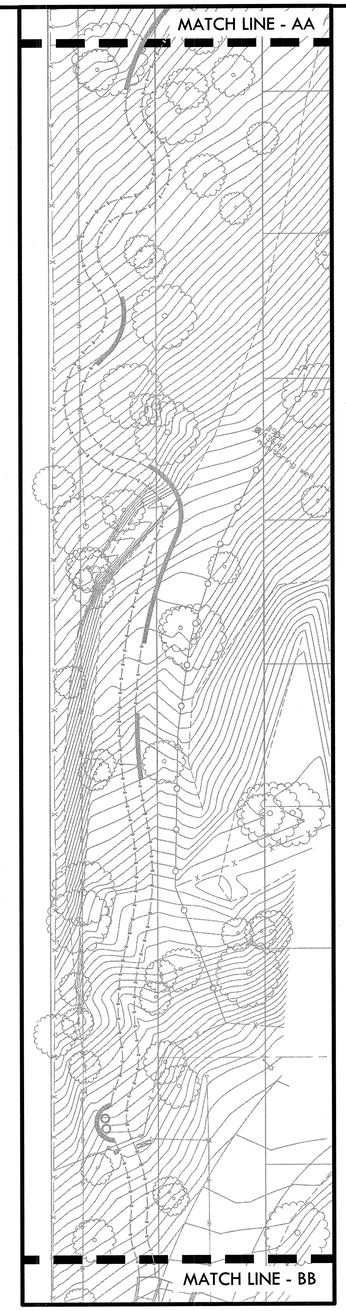

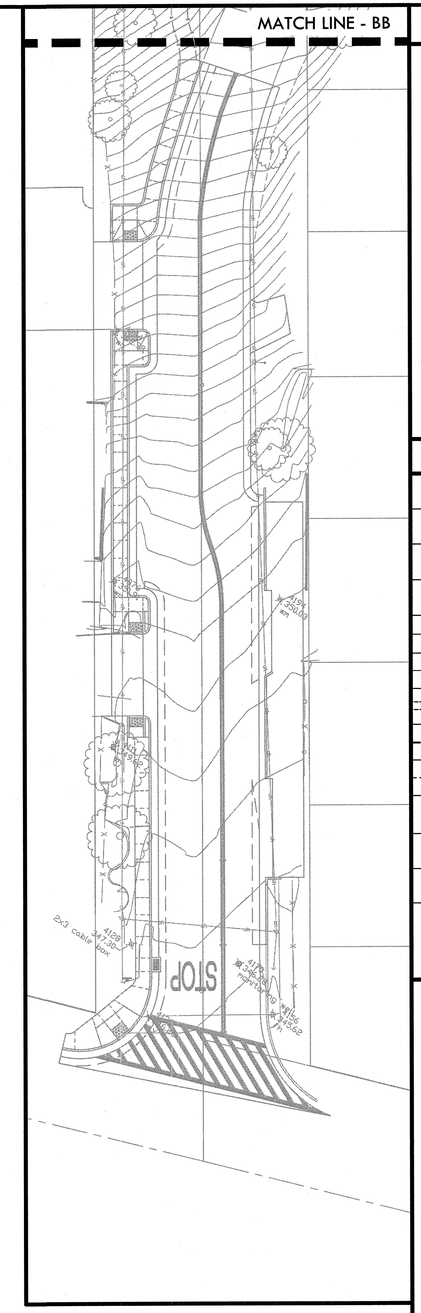

IRRIGATION NOTES

1. THIS SYSTEM IS DESIGNED TO OPERATE AT A MAXIMUM FLOW OF (30) GPM WITH A MINIMUM (45) STATIC P.S.I. AT THE POINT OF CONNECTION. CONTRACTOR SHALL VERIFY PRESSURE PRIOR TO BEGINNING WORK. CONTACT OWNER IMMEDIATELY SHOULD DISCREPANCY ARISE AND RE-DIRECT WORK TO AVOID DELAY.
2. CONTRACTOR SHALL COORDINATE ELECTRICAL SUPPLY WITH GENERAL CONTRACTOR. GENERAL CONTRACTOR SHALL STUB APPROPRIATE POWER SUPPLY IN VICINITY OF CONTROLLER LOCATION.
3. CONTRACTOR SHALL PROGRAM CONTROLLER TO INSURE PROPER IRRIGATION. BASED ON PLANT TYPE, SUN EXPOSURE, SOIL TYPE, SLOPE AND SEASON.
4. CONTRACTOR SHALL USE EXTREME CARE WHERE IT IS NECESSARY TO TRENCH NEAR EXISTING TREES. EXCAVATION IN AREAS EXHIBITING ROOT 3" AND LARGER SHALL BE DONE BY HAND. ROOTS 2" OR LARGER IN DIAMETER DAMAGED IN CONSTRUCTION SHALL BE CLEANLY CUT.
5. CONTRACTOR SHALL INSTALL BUBBLERS AND POLY PIPE, 1 PER SHRUB, AND PVC LATERAL PIPE SIZED ACCORDING TO THE PIPE SIZING CHART FOR BUBBLER ZONES, AND WITHIN THE DASHED SHRUB AND GROUNDCOVER BUBBLER ZONE AREAS.
6. CONTRACTOR SHALL REFER TO DETAILS AND SPECIFICATIONS FOR ADDITIONAL INFORMATION.

IRRIGATION LEGEND

SYM	DESCRIPTION	MANUFACTURER / MODEL NO. / NOTES	GPM	PSI	DTL REF
•	SHRUB BUBBLER	HUNTER PCB-25-BUBBLER NOZZLE - 1 PER SHRUB	.25	15	H D2.1
	REMOTE CONTROL VALVE	HUNTER - ICV-G-AS-ADJ - SIZE AS NOTED			B D2.1
	GATE VALVE	NIBCO - GATE VALVES 2" AND SMALLER SHALL BE NIBCO T-113-LF. FOR VALVES ABOVE 2" IN SIZE UTILIZE NIBCO F-619 FLANGED VALVE WITH SQUARE OPERATING NUT.			G D2.1
	LATERAL LINES	3/4" LATERAL LINE - SCHEDULE 40 PVC PIPE WITH SCH. 80 PVC SOLVENT-WELD FITTINGS, AND 18" COVER.			AJ D2.1
	LATERAL LINES	1" LATERAL LINE - SCHEDULE 40 PVC PIPE WITH SCH. 80 PVC SOLVENT-WELD FITTINGS, AND 18" COVER.			AJ D2.1
	SLEEVE	CLASS 315 PVC. PIPE SIZE TO BE TWICE THE SIZE OF TOTAL PIPE DIAMETERS WITHIN THE SLEEVE, OR AS NOTED, WITH 30" COVER.			I D2.1
	MAIN LINE	PROPOSED IRRIGATION MAIN LINE - 1 1/2" CLASS 315 PVC PIPE AND SOLVENT WELD FITTINGS AT 24" DEPTH			AJ D2.1
	DOMESTIC WATER LINE	1" DOMESTIC SCHEDULE 40 PVC PIPE WITH SOLVENT WELD FITTINGS AND 24" COVER			AJ D2.1
P.O.C.	POINT OF CONNECTION	TIE 1 1/2" MAIN LINE TO DOMESTIC WATER LINE AS SHOWN. VERIFY LOCATION AND WATER PRESSURE IN FIELD. PROVIDE STATIC WATER PRESSURE RATE TO OWNER'S REPRESENTATIVE.			
♦	QUICK COUPLER VALVE IN LANDSCAPE	HUNTER - HQ-44-LRC QUICK COUPLER VALVE			C D2.1
C	CONTROLLER	HUNTER - IC-600, MOUNTED IN NEW NEMA-3R ENCLOSURE, SEE ELECTRICAL PLANS AND COORDINATE WITH ELECTRICAL CONTRACTOR.			

1 — CONTROLLER STATION NUMBER
1" | 13 — APPROX. GPM FLOW THROUGH VALVE; CONTROL VALVE SIZE

NORTH

0' 10' 20' 40' 60'

REGISTERED LANDSCAPE ARCHITECT
DEREK MCKEE
No. 4000
Signature
EXPIRATION DATE: DEC. 2017
STATE OF CALIFORNIA

NO.	DESCRIPTION	DATE	BY

Revisions

WORK ACCEPTED: INSPECTOR:
BY: DATE:

DRAWN: RK/JL/QH
DESIGN: CMES
HOR: N/A
CHECKED: CMES / DM
VERT: N/A
APPROVED: K Baik
DATE: 12/15/16
JOB NUMBER: 135013
KARL D. BAIKE - CITY ENGINEER
RCE 38416 EXP. 12/31/2017

CITY OF MORGAN HILL
City of Morgan Hill
Public Works Department
17575 Peak Ave. Morgan Hill, CA 95037 (408)778-6480, Fax (408)779-7236

VERDE DESIGN
LANDSCAPE ARCHITECTURE
CIVIL ENGINEERING
SPORT PLANNING & DESIGN
2455 The Alameda, Ste. 200
Santa Clara, CA 95050
tel: 408.985.7200
fax: 408.985.7290
www.verdedesigninc.com

DEL MONTE AVE AND WEST 3RD STREET, MORGAN HILL, CA 95037

IRRIGATION PLAN
HILLTOP PARK

FILE NUMBER: 1520400
PRINT DATE: 12/07/16
SHEET NUMBER: L7.1

BID DRAWINGS

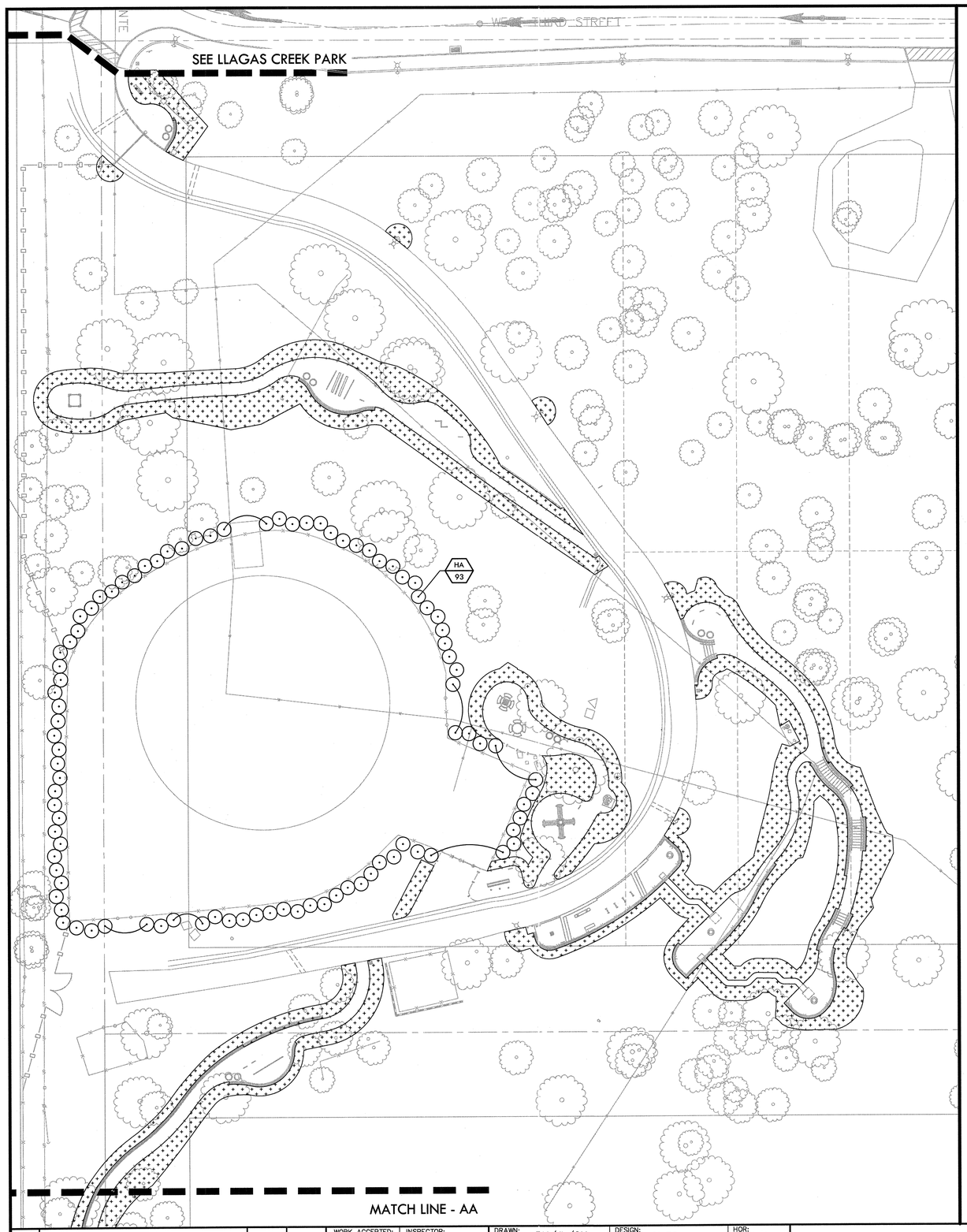

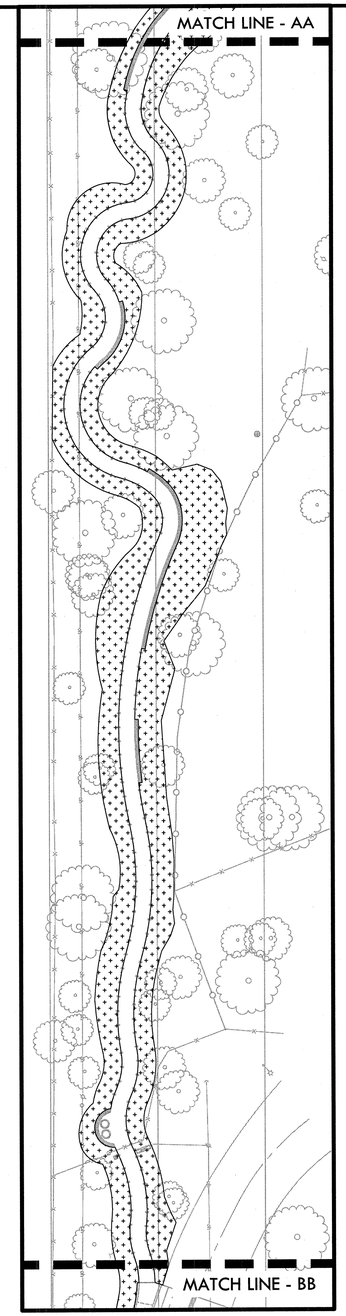

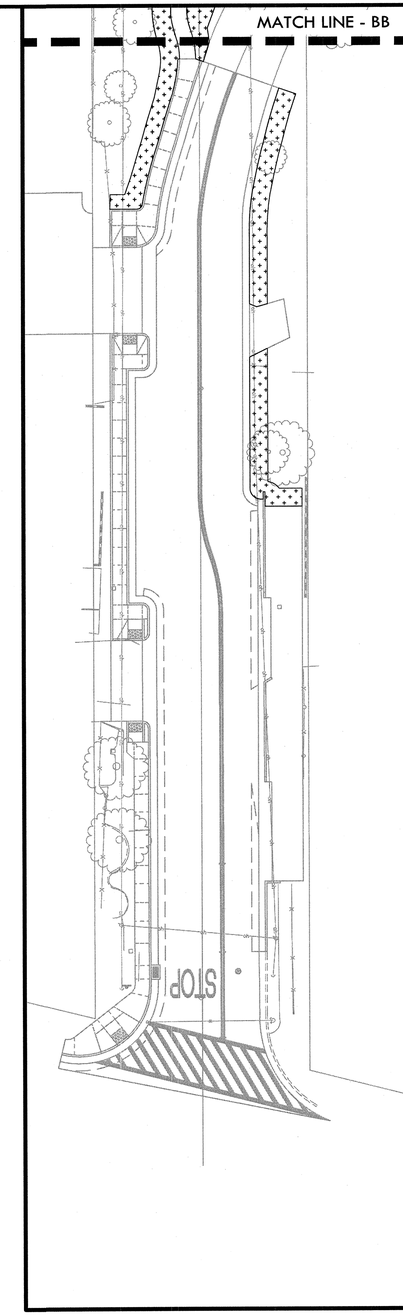

PLANTING NOTES

1. CONTRACTOR SHALL PROTECT AND MAINTAIN ALL PLANT MATERIALS FROM TIME OF DELIVERY TO TIME OF FINAL ACCEPTANCE. OWNER SHALL NOT BE RESPONSIBLE FOR LOSSES DUE TO VANDALISM, THEFT OR SEVERE WEATHER.
2. CONTRACTOR SHALL PLACE PLANT MATERIALS SO THEY DO NOT INTERFERE WITH IRRIGATION SYSTEM OR INHIBIT REQUIRED COVERAGE. PLANT LOCATIONS MAY BE ADJUSTED AS LONG AS DESIGN INTENT IS NOT COMPROMISED. CONTRACTOR SHALL SET OUT PLANT MATERIALS AS PER PLAN AND RECEIVE ACCEPTANCE FROM OWNER'S REPRESENTATIVE WITH RESPECT TO PLANT HEALTH AND LOCATION PRIOR TO INSTALLATION. CONTRACTOR SHALL GIVE MINIMUM 2 WORKING DAYS NOTICE FOR OBSERVATION AND SHALL HAVE ALL PLANT MATERIALS IN SPECIFIED LOCATIONS FOR REVIEW AT ONE TIME. CONTRACTOR SHALL REPLACE ANY MATERIAL AS REQUESTED BY OWNER'S REPRESENTATIVE.
3. WHEN WORK HAS TO OCCUR UNDER THE DRIPLINE OF EXISTING TREES NOT SCHEDULED FOR REMOVAL, THE CONTRACTOR SHALL USE ALL POSSIBLE CARE TO AVOID INJURY TO THE TREES AND TREE ROOTS. GRADE IN LINES RADIAL TO THE EXISTING TREES RATHER THAN TANGENTIAL. ALL PARTIAL CUTS OR TEARS THROUGH ROOTS TWO INCHES IN DIAMETER AND LARGER SHALL BE CUT CLEAN. TRENCHES ADJACENT TO TREES SHALL BE FILLED WITHIN 24 HOURS AFTER EXCAVATION, BUT WHERE THIS IS NOT POSSIBLE, THE SIDE OF THE TRENCH ADJACENT TO THE TREE, AND ANY EXPOSED ROOTS SHALL BE KEPT SHADED AND MOIST WITH DAMPENED BURLAP OR CANVAS.
4. ALL PLANT PITS TO RECEIVE SOIL AMENDMENTS AND SOIL PREPARATION PER SPECIFICATIONS UNLESS OTHERWISE NOTED.
5. CONTRACTOR SHALL REFER TO DETAILS AND SPECIFICATIONS FOR ADDITIONAL INFORMATION.

EROSION CONTROL NOTES

EROSION CONTROL MEASURES

1. EROSION IS TO BE CONTROLLED AT ALL TIMES.
2. THE DESIRED END RESULT OF THESE MEASURES IS TO CONTROL SITE EROSION AND PREVENT SEDIMENT TRANSPORT OFF THE SITE. IT SHALL BE THE OWNER'S RESPONSIBILITY TO SEE THAT ANY ADDITIONAL MEASURES NECESSARY TO MEET THIS GOAL ARE IMPLEMENTED. IF FAILED INSPECTIONS BY CITY STAFF SHOW THIS GOAL IS NOT BEING MET, ADDITIONAL MEASURES MAY BE REQUIRED.
3. ALL DISTURBED AREAS NOT CURRENTLY BEING USED FOR CONSTRUCTION SHALL BE SEEDED WITH THE FOLLOWING SEED MIXTURE:

   WINTER BARLEY 5LBS PER 1000 SF
4. AFTER SEEDING, STRAW MULCH WILL BE APPLIED AT 2-3 STRAW BALES PER 1000 SQ FT.
5. AMMONIUM PHOSPHATE FERTILIZER, 6-3-3, SHALL BE APPLIED AT A RATE OF 30 LBS. PER ACRE. ON SLOPES GREATER THAN 20% EROSION CONTROL BLANKET (NORTH AMERICAN GREEN) SHALL BE APPLIED.
6. SILT BARRIERS OR FILTER ROLLS SHALL BE PLACED END TO END AND STAKED DOWN ALONG THE BOTTOM OF ALL GRADED SLOPES.
7. ALL EROSION CONTROL MEASURES INCLUDING BUT NOT LIMITED TO SILT FENCES, FIBER ROLLS AND SLOPE PROTECTION SHALL BE IN PLACE PRIOR TO CONSTRUCTION. THE ENGINEER OF RECORD SHALL INSPECT ONCE EROSION CONTROL MEASURES HAVE BEEN INSTALLED

EXPOSED SLOPE MEASURES

1. COVER ALL EXPOSED SLOPES
2. SLOPED LESS THAN 3:1 - SEED WITH 5 LBS WINTER BARLEY AND COVER WITH 2-3 BALES OF STRAW MULCH PER 1000 SQ FT AND SOIL BINDER
3. SLOPES GREATER THAN 3:1 - SEED WITH 5 LBS WINTER BARLEY PER 1000 SQ FT AND COVER WITH NORTH AMERICAN GREEN C125 OR EQUAL.

PLANTING LEGEND

SYM	QTY	SIZE	BOTANICAL/COMMON NAME	WUCOLS PF*	SPACING/ COMMENTS	DTL REF
SHRUBS						
HA	93	5 GAL.	HETEROMELES ARBUTIFOLIA TOYON	L	5'-0" O.C.	F D2.1
GROUNDCOVERS						
			HYDROSEED EROSION CONTROL GRASS - WINTER BARLEY @ 5 LBS./ 1,000 S.F.			

NOTES:
* PLANT FACTORS ARE BASED ON WUCOLS IV PLANT LIST.

NORTH

0' 10' 20' 40' 60'

REGISTERED LANDSCAPE ARCHITECT
DEREK MCKEE
No. 4148
Signature
EXPIRATION DATE: DEC. 2017
STATE OF CALIFORNIA

NO.	DESCRIPTION	DATE	BY

Revisions

WORK ACCEPTED: INSPECTOR:
BY: DATE:

DRAWN: RK/JL/QH DESIGN: CMES HOR: N/A
CHECKED: CMES / DM VERT: N/A
APPROVED: K Bae DATE: 12/15/16 JOB NUMBER: 135013
KARL D. BJARKE - CITY ENGINEER
RCE 38416 EXP. 12/31/2017

CITY OF MORGAN HILL

City of Morgan Hill
Public Works Department
17575 Peak Ave. Morgan Hill, CA 95037 (408)778-6480, Fax (408)779-7236

VERDE DESIGN
LANDSCAPE ARCHITECTURE
CIVIL ENGINEERING
SPORT PLANNING & DESIGN
2455 The Alameda, Ste. 200
Santa Clara, CA 95050
tel: 408.985.7200
fax: 408.985.7260
www.verdedesigninc.com

DEL MONTE AVE AND WEST 3RD STREET, MORGAN HILL, CA 95037

PLANTING PLAN
HILLTOP PARK

FILE NUMBER: 1520400
PRINT DATE: 12/07/16
SHEET NUMBER: L8.1

BID DRAWINGS

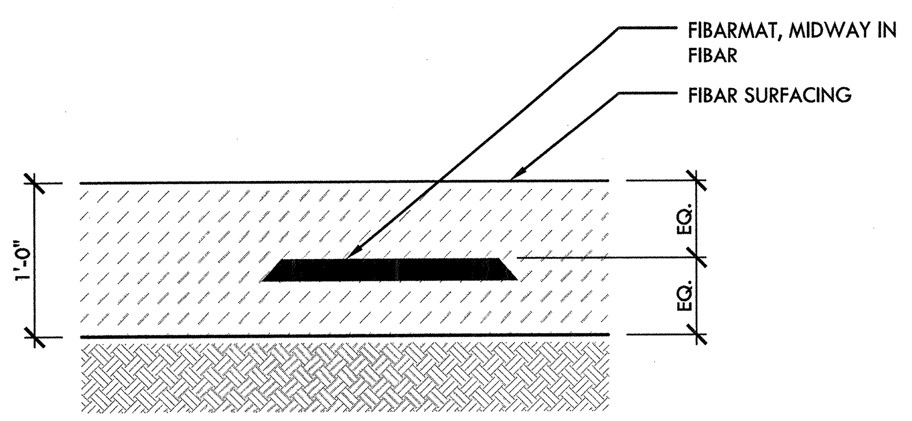

NOTES:
1. INSTALLATION TO BE COMPLETED IN ACCORDANCE WITH MANUFACTURERS DETAILS SPECIFICATIONS.
2. DO NOT SCALE DRAWINGS, FOR ILLUSTRATION PURPOSES ONLY.
3. THE FIBAR SYSTEM IS PROTECTED BY US PATENTS 4679963, 5026207, 5076726 AND PATENTS PENDING.
4. CONTRACTORS MUST OBTAIN A LICENSE FROM FIBAR, INC. PRIOR TO CONSTRUCTION.
5. FIBARMAT WEAR MATS MUST BE INSTALLED UNDER ALL SLIDE EXITS TO PRESERVE WARRANTY. SEE 312-002.
6. FOR PRODUCT AND PURCHASING INFORMATION VISIT www.CADdetails.com/info REFERENCE NUMBER 312-008.

G FIBARMAT UNDER SLIDES NTS

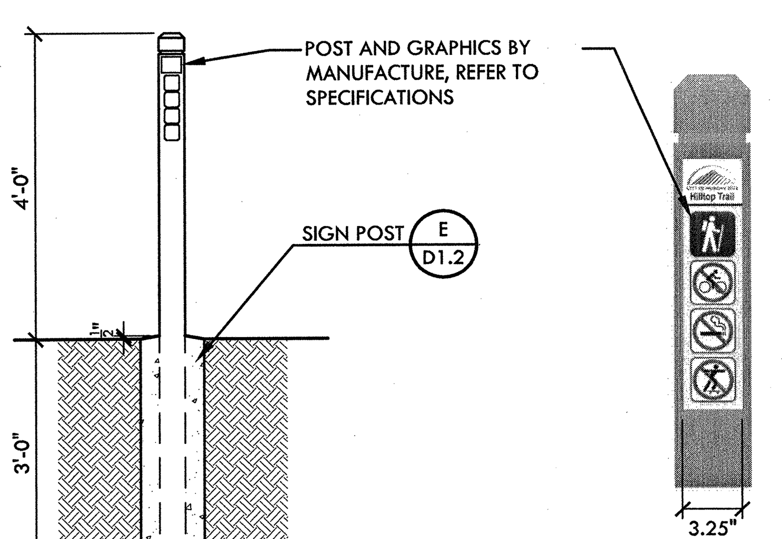

F TRAIL MARKER NTS

City of Morgan Hill
Public Works Department
CITY ENGINEER 8/6/98 DATE REVISED

DECOMPOSED GRANITE PAVING

DRAWING NO. L-27

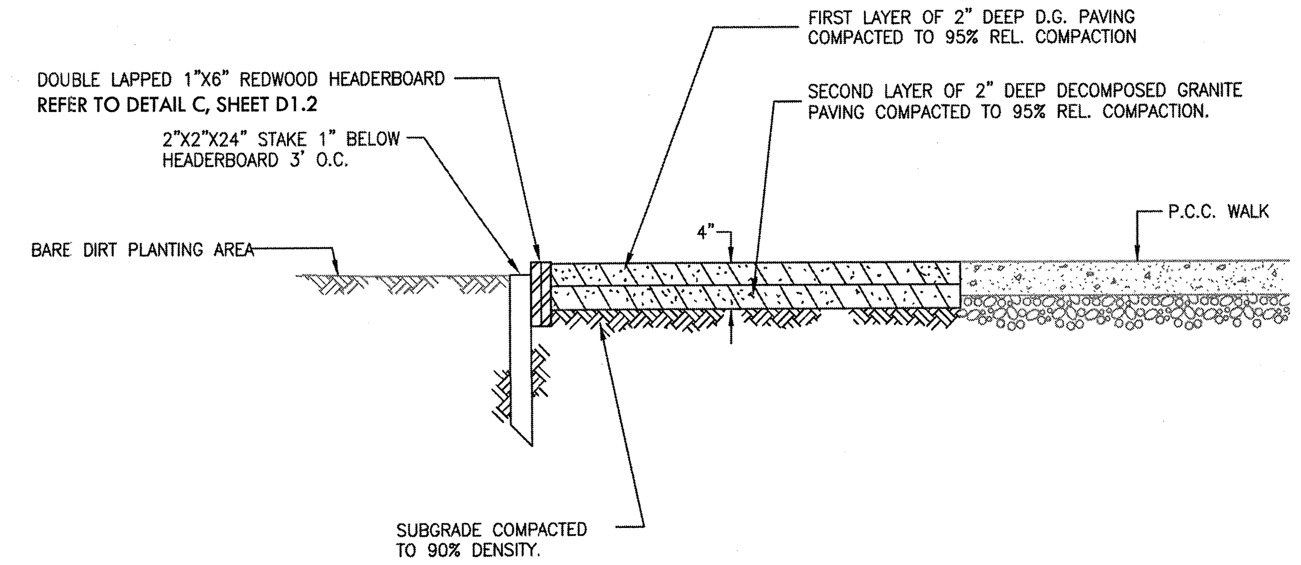

NOTE: FIRST LAYER OF D.G. SHALL BE COMPACTED BEFORE INSTALLATION OF SECOND LAYER.

E DECOMPOSED GRANITE

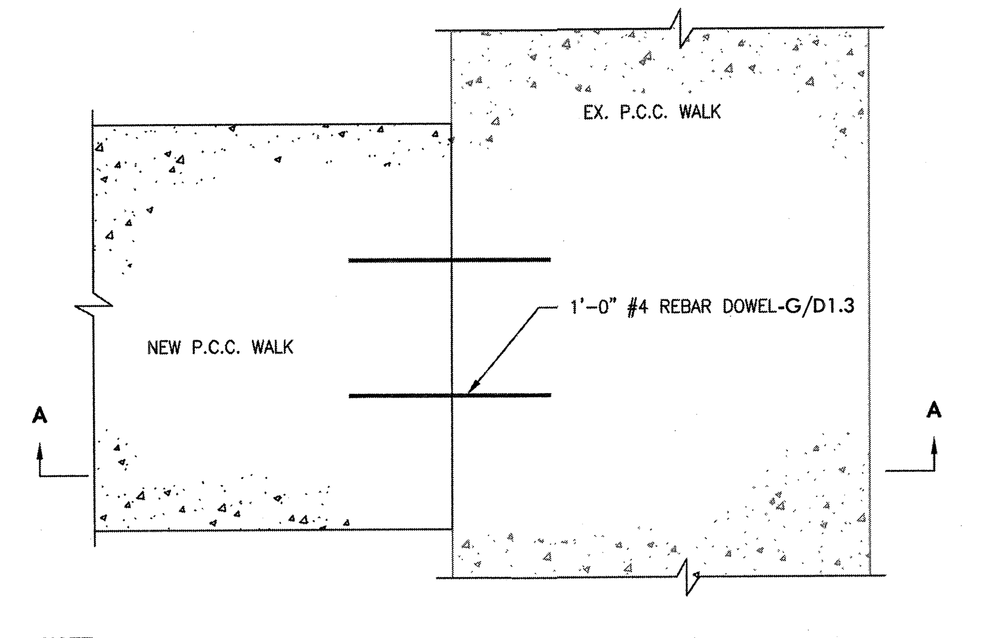

NOTE:
1. DRILL & EPOXY DOWEL INTO EX. P.C.C. & GREASE OTHER HALF BEFORE POURING.

PLAN

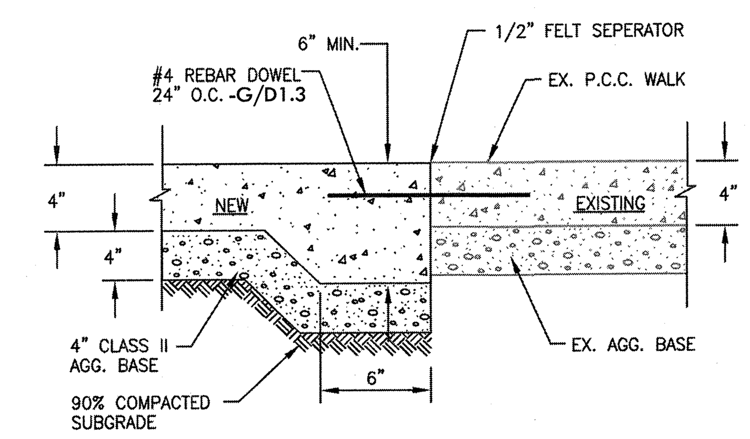

SECTION A-A

City of Morgan Hill
Public Works Department
CITY ENGINEER 8/6/98 DATE REVISED

P.C.C. WALKWAY NEW WALK TO EXISTING CONNECTION

DRAWING NO. L-26

C P.C.C. NEW WALKWAY TO EXISTING CONNECTION

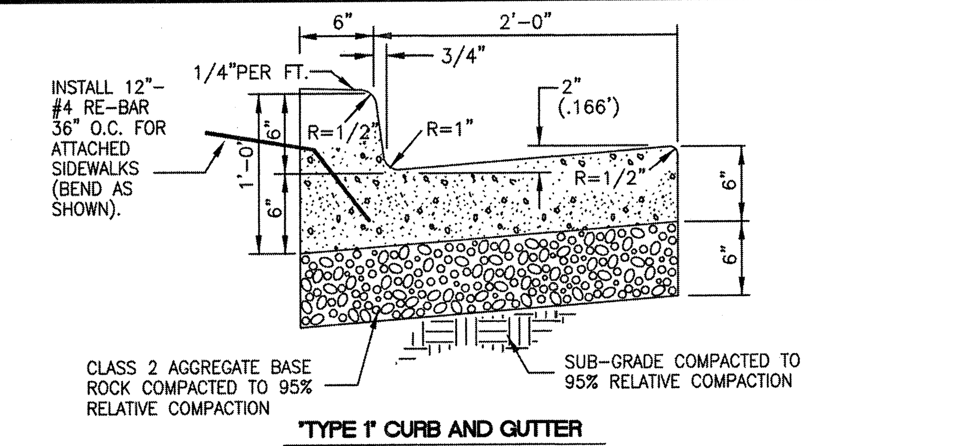

'TYPE 1' CURB AND GUTTER

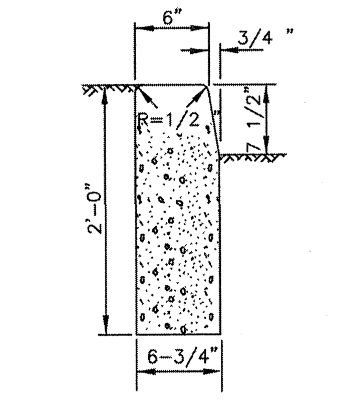

'TYPE 2' FULL VERTICAL CURB

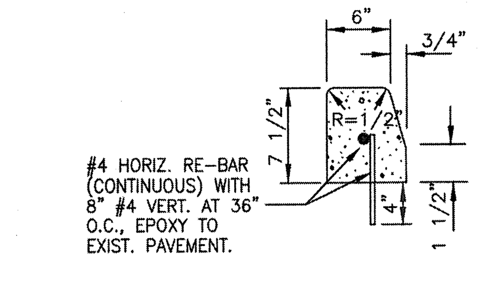

'TYPE 3' (TEMPORARY) EXTRUDED CURB

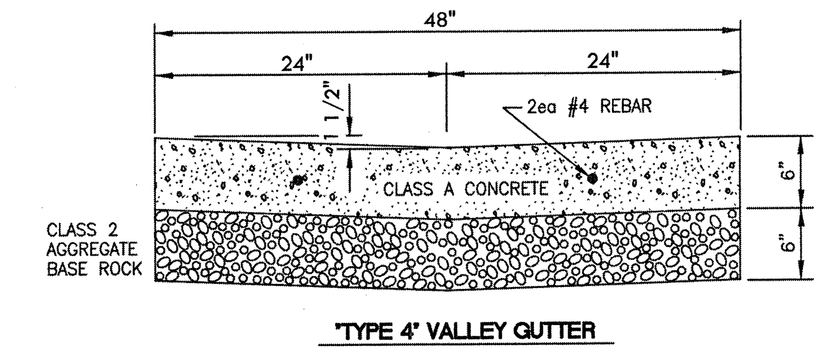

'TYPE 4' VALLEY GUTTER

NOTES:
1. A DEEP SCORE JOINT AT EVERY 10' (1/4" X 1 1/4" MIN.) AND A FELT SEPARATOR AT EVERY 60' (1/2") SHALL BE INSTALLED FOR ALL GUTTER TYPES.
2. TYPE 3 (TEMPORARY) EXTRUDED CURB SHALL ONLY BE USED UPON WRITTEN APPROVAL BY THE CITY ENGINEER.

City of Morgan Hill
Public Works Department
CITY ENGINEER 4/1/96 DATE 3/15/07 REVISED

CONCRETE CURB AND/OR GUTTER TYPES

DRAWING NO. A-3

B CONCRETE CURB AND GUTTER

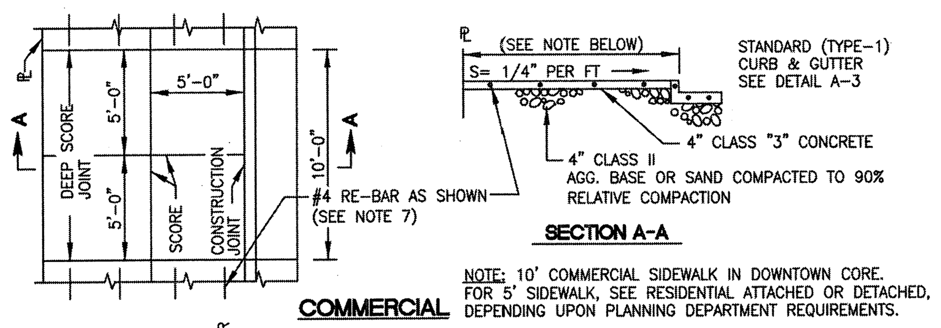

COMMERCIAL

NOTE: 10' COMMERCIAL SIDEWALK IN DOWNTOWN CORE. FOR 5' SIDEWALK, SEE RESIDENTIAL ATTACHED OR DETACHED, DEPENDING UPON PLANNING DEPARTMENT REQUIREMENTS.

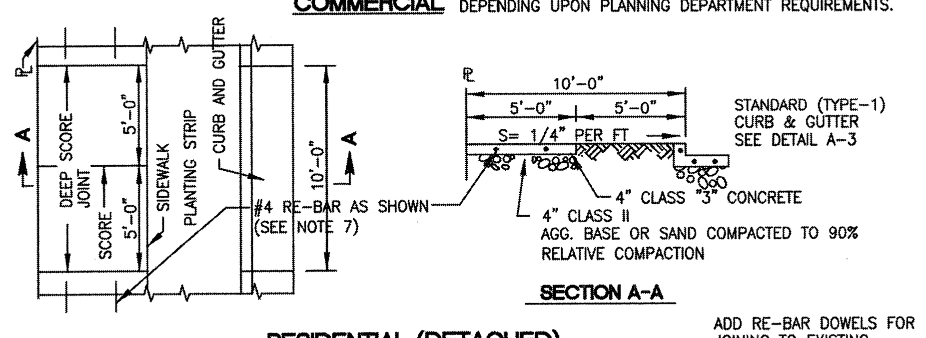

RESIDENTIAL (DETACHED)

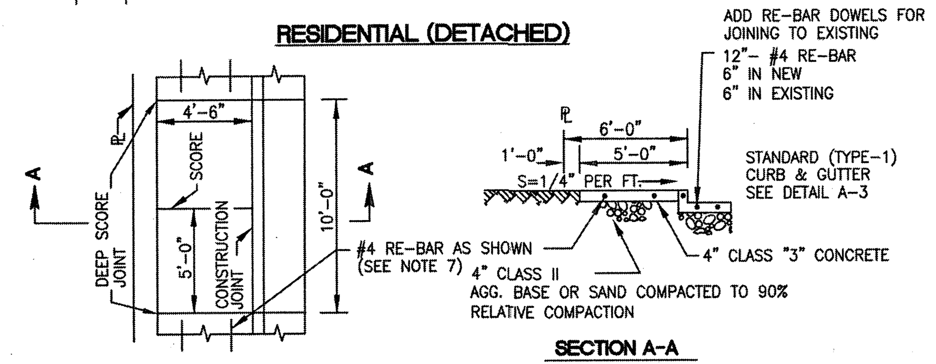

RESIDENTIAL (ATTACHED)

NOTES:
1. CONSTRUCT 3/8" EXPANSION JOINTS WITH FELT FILLER AT RETURNS AND MAJOR STRUCTURES.
2. ROUND ALL EXPOSED EDGES TO 1/2" RADIUS.
3. PLACE EXPANSION JOINTS EVERY 60' (1/2" FELT SEPARATOR).
4. PLACE DEEP SCORE JOINTS EVERY 10'. (1/4" X 1 1/4" MIN)
5. PLACE SCORE MARKS EVERY 5' IN SIDEWALK SECTIONS ONLY. (1/8" X 1/2" MIN.)
6. PLACE AN "S" FOR SEWER LATERAL AND A "W" FOR WATER SERVICE ON FACE OF CURB (NEW DEVELOPMENTS ONLY).
7. FOR NEW SIDEWALK POURED TO ADJOIN EXISTING SIDEWALK, 2-#4 REBARS SHALL BE DOWELLED 6" INTO EXISTING SIDEWALK AND EXTEND 6" INTO NEW SIDEWALK POUR (SEE DIAGRAM ABOVE)..
8. FOR NEW ATTACHED SIDEWALK POURED TO ADJOIN EXISTING CURB, #4 REBARS SHALL BE DOWELLED 6" INTO BACK OF CURB AT EVERY 36" (NOT SHOWN IN DIAGRAM, SEE DETAIL A-3).

City of Morgan Hill
Public Works Department
CITY ENGINEER 4/1/96 DATE 3/15/07 REVISED

SIDEWALK COMMERCIAL, DETACHED RESIDENTIAL, AND ATTACHED RESIDENTIAL

DRAWING NO. A-4

D SIDEWALK COMMERCIAL AND RESIDENTIAL

STREET SECTION

GENERAL

All work shall be in accordance with the latest edition of Standard Specifications, State of California, Department of Transportation, Caltrans (CSS) and the American Society for Testing and Materials (ASTM), except as modified herein.

SUBGRADE

(a) Preparation. Special care shall be taken by the contractor to achieve an evenly compacted subgrade. The relative compaction shall be 95%, as determined by CSS TM-231, for at least the top 8" of subgrade. In areas of fill, a minimum of 24" from finished grade shall be compacted to 95% relative compaction. Moisture-Density curve determinations shall conform to ASTM D1557.

PAVEMENT

(a) Asphalt Concrete Pavement Asphalt concrete pavement shall contain the number of lifts specified. In the case of two lifts, the first shall be the base course, Type B, 3/4 inch maximum aggregate size, and the second lift shall be the surface course, Type B, 1/2 inch maximum aggregate size, as specified in CSS Section 39. The relative compaction of each ashphalt concrete lift shall be 95%, unless approved otherwise by the City Engineer.

(b) Aggregate Base. Aggregate base shall be 3/4" max. Class 2 aggregate base as specified in CSS Section 26.

(c) Aggregate Sub-base. Aggregate sub-base shall be 1 1/2" max. Class 2 aggregate base, as specified in CSS Section 26.

(d) Contaminated Base. Any aggregate base that becomes contaminated during construction shall be removed and replaced with uncontaminated Class 2 Aggregate Base.

(e) Lime Stabilized Subgrade. Lime stabilized subgrade shall only be used upon approval of the City Engineer and shall be constructed in accordance with CSS Section 24. An increase in the lime content must be approved by the City Engineer.

(f) Proportioning, Mixing, Spreading, and Compacting. The proportioning, mixing, spreading and compacting of asphalt concrete to make up asphalt pavement, shall be in accordance with CSS Section 39.

(g) Priming. Untreated aggregate base shall be primed with MC-70, in accordance with CSS Section 39-4.02.

(h) Tacking. Any vertical edge adjoining new pavement courses shall be tacked with SS-1 prior to placement of pavement course, in accordance with CSS Section 39-4.02.

(i) Fog Sealing. The asphalt surface shall be fog sealed with SS-1 when specified and conform to CSS Section 37.

City of Morgan Hill
Public Works Department
CITY ENGINEER 4/1/96 DATE REVISED

GENERAL NOTES

DRAWING NO. A-I

(j) Joining Existing Pavement. Existing pavement which is to be joined by new pavement, shall be saw cut vertical to provide straight, true, and neat joints. Overlapping of existing pavement without saw cutting or grinding shall not be permitted. The vertical edges shall be tacked prior to paving as specified previously. Terminals of all surfacing indicated on the plans shall join any existing surface in a smooth butt joint. Conform paving by method of abrasive grinding will be allowed upon approval of the City Engineer.

(k) Patch Repairs. Where repairs to new or existing asphalt concrete are required, the AC shall be totally removed, edges saw cut and tacked, base primed, and replaced with new hot mix AC. If cold mix is used as a temporary patch, the contractor shall be responsible for maintenance of the cold mix at all times. Contractor shall remove all cold mix prior to finish paving and henceforth become property of the Contractor.

(l) Removal and Disposal of Pavement. Where pavement is shown to be removed on the plans, it shall mean that all asphalt concrete and aggregate base be removed. Waste or surplus asphalt mix, old pavement and sub-base debris shall be removed from the site.

CONCRETE

(a) Cement. All cement shall conform to the specifications and tests for Portland Cement, ASTM Specifications C-150, and shall be Type 2.

(b) Fine aggregate. Fine aggregate shall be clean, natural sand or sand prepared from stone or gravel and shall conform to the requirements of ASTM C-33, and CSS Section 90-2.02B.

(c) Coarse Aggregate. Coarse aggregate shall consist of material conforming to the requirements of ASTM C-33, and shall be in accordance with CSS Section 90-2.02A.

(d) Water. Water used in making concrete shall be clean, free from oil, alkali, acid, organic matter, or other deleterious substances. Water shall be in accordance with CSS Section 90-2.03.

(e) Admixtures. No admixtures will be allowed except as approved by the City Engineer on a job to job basis. Such usage may only be for the purpose of increasing plasticity. No decrease in cement content shall be permitted as a result of the use of such admixtures. No other admixtures shall be added to the concrete mix. The use of admixtures, if approved by the City Engineer, shall be in accordance with CSS Section(s) 90-4.03 and 90-4.04.

(f) Workmanship and Methods. Unless specifically covered elsewhere in these details, all concrete work, including detailing of reinforcing, shall be equal to the best general practice and as set forth in the ACI Building Code, Manuals and Recommended Practices.

(g) Classes of Concrete. Concrete shall consist of two classes, herein referred to as Class 2 and Class 3, as specified in CSS Section 90. Class 2 concrete shall be used in all retaining walls, box culverts, and wherever specified in the plans and specifications. At a minimum, Class 3 concrete shall be used for driveway approaches, sidewalks, curb and gutters, thrust blocks, and miscellaneous construction items such as pipe encasements. No mixture shall produce less than 3,000 psi (at 28 days) with maximum water/cement ratio of 0.5.

City of Morgan Hill
Public Works Department
CITY ENGINEER 4/1/96 DATE 3/15/07 REVISED

GENERAL NOTES

DRAWING NO. A-II

(h) Pneumatically Placed Mortar. Materials used in Gunite, Shotcrete, Mortar, etc., applied directly to a surface by air jet, shall be in accordance with CSS Section 53 and Section 90, irrespective of manufacture of the mixing and placing apparatus.

(i) Proportioning and Mixing. All proportioning and mixing methods, devices, and transporting, shall be in accordance with CSS Section(s) 90-5 and 90-6.

(j) Workability. Concrete shall be of such consistency that it can be worked readily into the corners and angles of the forms and around the reinforcement without excessive spading and does not permit material segregation or bleeding of water.

(k) Field Tests. During the progress of construction, the Inspector has the authority to order tests to determine whether the concrete, as being produced, complies with the standards of quality specified. These tests shall be made in accordance with ASTM C 31 and ASTM C 39. For all concrete, the standard age for the test shall be 7 days. Slump tests shall be in accordance with ASTM C 143.

EMERGENCY ACCESS SURFACING

Contractor shall be responsible for providing an "All Weather Surface" to any existing structure and/or structures under construction within the project area. For structures under construction, the required surface shall be in place prior to the commencement of any wood framing.

The required "All Weather Surface" shall consist of 6" min. thickness, Class 2 Aggregate Baserock, compacted to a relative compaction of 95%. The contractor shall be responsible for removal of any contaminated baserock prior to finish grading.

The Building Division will issue a "Foundation Only" permit and shall not issue a permit for wood framing unless the following requirements are met:

1. All new water mains are charged, pressure tested, bacteria tested and approved by the Department of Public Works. All fire hydrants within 500' of new construction are charged and operational.
2. All sub-grade is compacted to a relative compaction of 95%, tested and approved by the Department of Public Works.
3. Central Fire District has approved the proposed surface location and has visited the site after construction of the surface, but prior to issuance of Building permits for wood framing.

City of Morgan Hill
Public Works Department
CITY ENGINEER 4/1/96 DATE REVISED

GENERAL NOTES

DRAWING NO. A-III

REGISTERED LANDSCAPE ARCHITECT
DEREK MCKEE
No. 4148
Signature
EXPIRATION DATE: DEC. 2017
STATE OF CALIFORNIA

A STREET SECTION GENERAL NOTES

NO.	DESCRIPTION	DATE	BY

Revisions

WORK ACCEPTED: INSPECTOR:
BY: DATE:

DRAWN: RK/JL/QH
DESIGN: CMES
HOR: N/A
CHECKED: CMES / DM
VERT: N/A
APPROVED:
DATE: 12/15/16
JOB NUMBER: 135013
KARL D. BJARKE- CITY ENGINEER
RCE 39416 EXP. 12/31/2017

CITY OF MORGAN HILL
City of Morgan Hill
Public Works Department
17575 Peak Ave. Morgan Hill, CA 95037 (408)778-6480, Fax (408)779-7236

VERDE DESIGN
LANDSCAPE ARCHITECTURE
CIVIL ENGINEERING
SPORT PLANNING & DESIGN
2455 The Alameda, Ste. 200
Santa Clara, CA 95050
tel: 408.985.7200
fax: 408.985.7260
www.verdedesigninc.com

DEL MONTE AVE AND WEST 3RD STREET, MORGAN HILL, CA 95037

CONSTRUCTION DETAILS
HILLTOP PARK

FILE NUMBER: 1520400
PRINT DATE: 12/07/16
SHEET NUMBER: D1.1

BID DRAWINGS

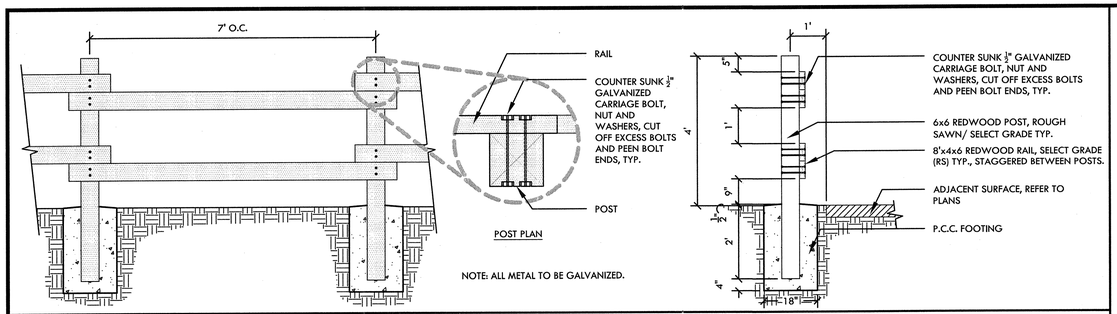

NOTE: ALL METAL TO BE GALVANIZED.

K POST AND RAIL FENCE — NTS

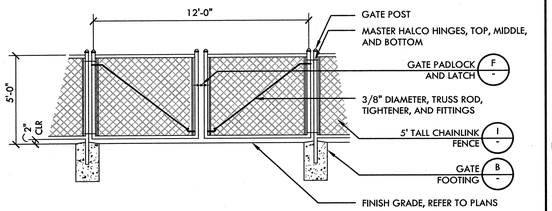

NOTE:
SEE GENERAL GATE NOTES ON DETAIL H, THIS SHEET.

J 12' WIDE VEHICULAR GATE — NTS

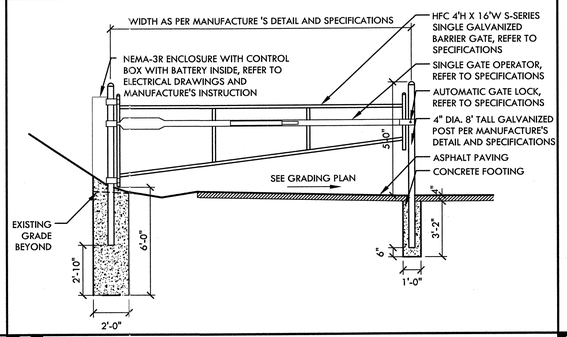

G REMOTE CONTROL BARRIER GATE — NTS

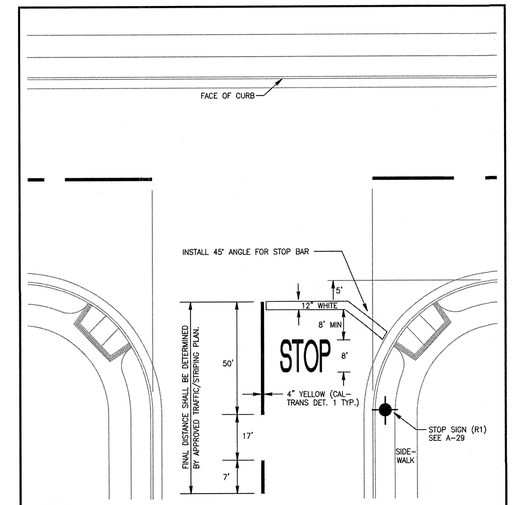

NOTES:

1. FINAL SIGN LOCATION AND STRIPING LAYOUT SHALL BE FIELD VERIFIED BY THE ENGINEER AFTER "CAT-TRACKING" AND PRIOR TO FINAL STRIPING APPLICATION.
2. ALL CENTERLINE STREET STRIPING SHALL BE YELLOW THERMAL PLASTIC PAINT WITH GLASS BEADS. THE STOP BAR AND "STOP" LEGEND LETTERING SHALL BE WHITE THERMAL PLASTIC PAINT WITH GLASS BEADS. THERMAL PLASTIC PAINT APPLICATIONS SHALL COMPLY WITH CALIFORNIA STATE SPECIFICATIONS SECTION 84-2.02 AND SHALL COMPLY WITH ALL APPLICABLE BAAQMD (BAY AREA AIR QUALITY MANAGEMENT DISTRICT) REGULATIONS FOR THERMAL PLASTIC PAINT.

City of Morgan Hill Public Works Department			STREET STRIPING & STOP BAR	DRAWING NO.
CITY ENGINEER	4/1/96 DATE	3/15/07 REVISED		A-30

D "STOP" LEGEND LETTERING

OFF-SITE WATER AND DUST CONTROL

Contractor shall provide a water truck onsite at all times. Contractor will be allowed to draw water from the City of Morgan Hill Water Distribution System only after obtaining a hydrant meter from the Public Works Department and an inspection of the water truck for a proper backflow device or "air-gap" filling pipe. Developer has paid for "off-site" construction water which shall not be used for building construction. Contractor shall keep down dust from construction activity to the maximum extent possible. Contractor shall clean all existing streets, curbs, gutters, and sidewalks affected by the project at the end of each working day.

MATERIAL STORAGE

No material shall be stored near the edge of pavement, traveled way, sidewalk, driveway, or shoulder line which may create a hazard for vehicular and pedestrian traffic.

TRAFFIC CONTROL

Contractor shall submit a traffic control plan for approval to the Public Works Department a minimum of 5 days prior to any work within an existing public street. The plan shall be signed by a licensed Traffic Engineer when it involves an arterial street. Contractor shall provide all necessary traffic control in accordance with the latest edition of CALTRANS "Manual of Warning Signs, Lights, and Devices for Use in Performance of Work Upon Highways" while working within the public right-of-way. Two traffic lanes (10' min.), shall be open to vehicular traffic during all hours, weekends, and holidays. One lane one way traffic, may be permitted under the control of not less than 2 (two) competent flagmen during construction operations. Street closures and detours shall only take place upon City Engineer approval and Police Department coordination.

City of Morgan Hill Public Works Department			GENERAL NOTES	DRAWING NO.
CITY ENGINEER	4/1/96 DATE	REVISED		G-II

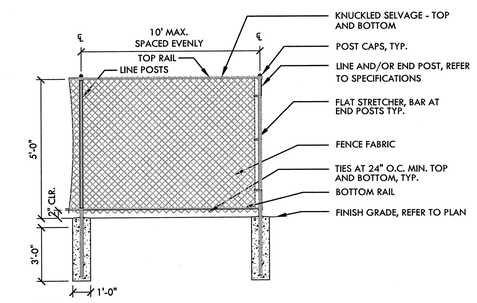

NOTE:
SEE GENERAL GATE AND FENCE NOTES, DETAIL H, THIS SHEET.

I 5'-0" TALL CHAIN LINK FENCE — NTS

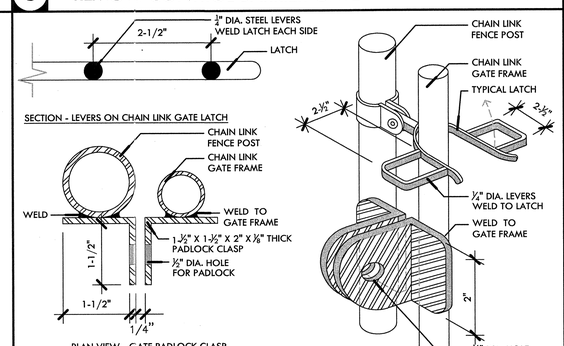

1. CONTRACTOR SHALL PROVIDE SHOP DRAWINGS FOR ACCEPTANCE BY DISTRICT'S REPRESENTATIVE PRIOR TO FABRICATION

F GATE PADLOCK AND LATCH — NTS

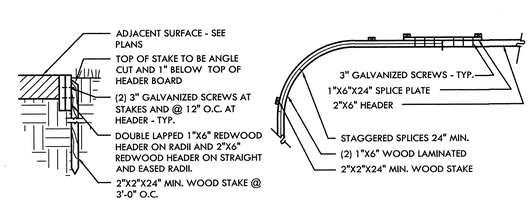

NOTE:

1. USE CURVED DETAIL WHEN RADIUS IS LESS THAN 30' & BOARD LENGTH IS LESS THAN 16'
2. ALL WOOD TO BE ROUGH SAWN REDWOOD CONST. GRADE
3. FINISH GRADE OF PLANTING AREA TO BE 1" BELOW TOP OF HEADER.
4. TAPER FINISH GRADE FROM 1" AT HEADER TO 3" WITHIN 4'-0" OF HEADER BOARD, FOR 3" MULCH LAYER
5. STAKES TO BE PLACED ON OPPOSITE SIDE FROM FIBAR AT FIBAR SURFACING

C REDWOOD HEADER BOARD — NTS

GENERAL SECTION

CONSTRUCTION WITHIN CITY RIGHT-OF-WAY

No person or contractor shall do or cause to be done any improvement or encroachment work of any kind in any public right-of-way within the City without first having obtained an encroachment permit from the Public Works Department.

Developers shall arrange for a pre-construction meeting with the City Engineer (Municipal Code 17.32.250b) prior to commencing any construction. An encroachment permit shall be obtained from the Public Works Department upon completion of said meeting and prior to constuction of any improvements within an existing or offered for dedication right-of-way, public utility easement or public service easement.

Contractor shall notify the Public Works Department 48 hours prior to commencement of any work phase. At that time an "Inspection Request Form" shall be completed to ensure proper scheduling of an inspection with the City Engineer's Representative.

Contractor shall not destroy existing permanent survey monuments; whether property corners or street centerline monuments.

All work shall conform to the latest edition of the City of Morgan Hill Standard Details for Construction. Deviations from the Standard Details must be approved by the City Engineer.

Contractor shall only use equipment provided with a spark arrestor device to reduce a potential fire hazard.

ON-SITE CONSTRUCTION

A grading permit shall be obtained from the City of Morgan Hill Building Division prior to any grading of building pads. Applicant for the grading permit shall provide a plan review letter from the Soils Engineer. A grading permit does not give contractor permission to commence off-site (street) grading. Only upon City approval of the improvement plans and completion of a pre-construction meeting, shall contractor commence off-site grading.

Contractor shall preserve all surrounding property by confining operations to within the "Limits of Work". Contractor shall be responsible for maintaining access for all adjoining residents, places of business, and properties at all times and in a safe manner. Contractor shall make proper notification at least 24 hours in advance of any interruption in access or service to the above property owners as well as to the City Engineer's Representative.

RIGHT OF MODIFICATION

Approval of an improvement plan does not release owner/subdivider of the responsibility for correction of mistakes, errors, or omissions, contained within the plans. If during the course of construction, public interest requires a modification of or a departure from the improvement plans or these Standard Details for Construction, the City Engineer shall have the authority to require such modifications and departures and to specify the manner in which the same is to be made.

City of Morgan Hill Public Works Department			GENERAL NOTES	DRAWING NO.
CITY ENGINEER	4/1/96 DATE	REVISED		G-I

NOTES PERTAIN TO ALL GATE AND FENCE DETAILS:

1. PLACE FENCE FABRIC ON PARK SIDE.
2. BOTTOM RAIL TO BE 2" FROM FINISH GRADE, FENCE FABRIC BOTTOM EDGE TO BE 1" FROM FINISH GRADE.
3. SUBMIT SHOP DRAWINGS FOR ACCEPTANCE BY OWNER'S REPRESENTATIVE PRIOR TO INSTALLATION.
4. REFER TO SPECIFICATIONS FOR ALL HARDWARE.
5. VEHICULAR GATES SHALL RECEIVE A GATE PADLOCK AND LATCH-SEE DETAIL. PEDESTRIAN GATES ARE NOTED BY HAVING A KICK PLATE ATTACHMENT.
6. TACK WELD HINGES TO POSTS AT GATES

H GATE AND FENCE NOTES — NTS

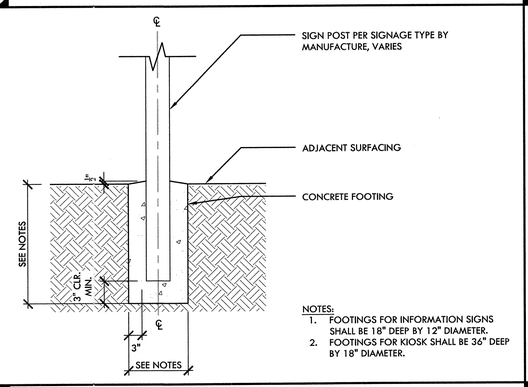

NOTES:

1. FOOTINGS FOR INFORMATION SIGNS SHALL BE 18" DEEP BY 12" DIAMETER.
2. FOOTINGS FOR KIOSK SHALL BE 36" DEEP BY 18" DIAMETER.

E SIGN POST — NTS

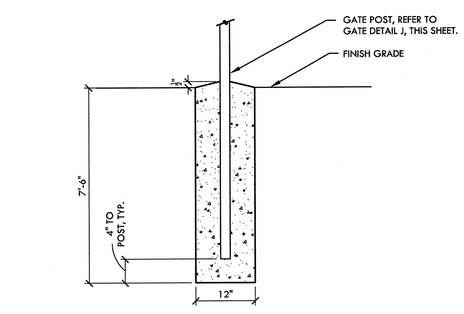

B GATE FOOTING — NTS

A GENERAL TRAFFIC NOTES

REGISTERED LANDSCAPE ARCHITECT — DEREK MCKEE — No. 4148 — Signature — EXPIRATION DATE: DEC. 2017 — STATE OF CALIFORNIA

NO.	DESCRIPTION	DATE	BY

Revisions

WORK ACCEPTED: INSPECTOR: BY: DATE:

DRAWN: RK/JL/QH DESIGN: CMES HOR: N/A
CHECKED: CMES / DM VERT: N/A
APPROVED: DATE: 12/15/16 JOB NUMBER: 135013
KARL D. BURKE - CITY ENGINEER RCE 38416 EXP. 12/31/2017

CITY OF MORGAN HILL — City of Morgan Hill Public Works Department — 17575 Peak Ave. Morgan Hill, CA 95037 (408)778-6480, Fax (408)779-7236

VERDE DESIGN — LANDSCAPE ARCHITECTURE CIVIL ENGINEERING SPORT PLANNING & DESIGN — 2455 The Alameda, Ste. 200 Santa Clara, CA 95050 tel: 408.985.7200 fax: 408.985.7290 www.verdedesigninc.com

DEL MONTE AVE AND WEST 3RD STREET, MORGAN HILL, CA 95037

CONSTRUCTION AND FENCING DETAILS
HILLTOP PARK

FILE NUMBER: 1520400
PRINT DATE: 12/07/16
SHEET NUMBER: D1.2

BID DRAWINGS

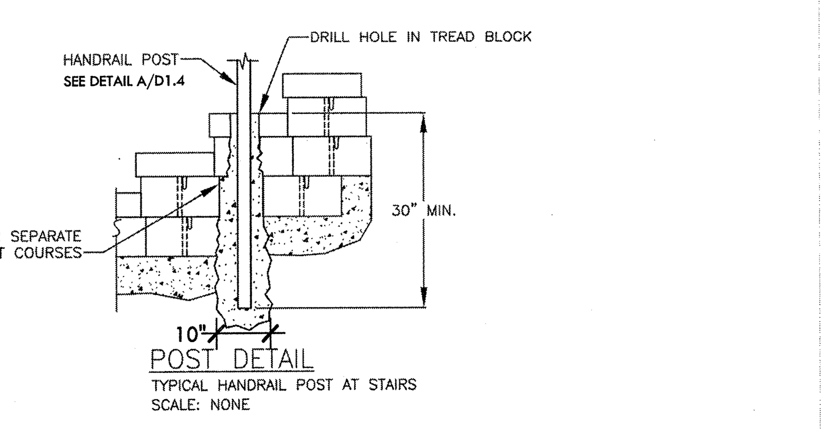

POST DETAIL
TYPICAL HANDRAIL POST AT STAIRS
SCALE: NONE

THESE PRELIMINARY DETAILS ARE INTENDED AS AN AID IN DESIGNING ATTRACTIVE, DURABLE RETAINING WALLS WITH VERSA-LOK UNITS. FINAL DETERMINATION OF THE SUITABILITY OF ANY INFORMATION OR MATERIAL FOR THE USE CONTEMPLATED, AND ITS MANNER OF USE, IS THE SOLE RESPONSIBILITY OF THE USER. A FINAL PROJECT SPECIFIC DESIGN SHOULD BE PREPARED BY A QUALIFIED, LICENSED, PROFESSIONAL ENGINEER.

VERSA-LOK® Retaining Wall Systems
(800)770-4525 fax(651)770-4089 6348 Hwy36 Ste1, Oakdale,MN 55128 Solid Solutions.™

VERSA-LOK STANDARD DETAILS
POST DETAIL III
SCALE: 3/4"=1' DRAWN BY: PPS DATE: 10/2007

O HANDRAIL FOOTING

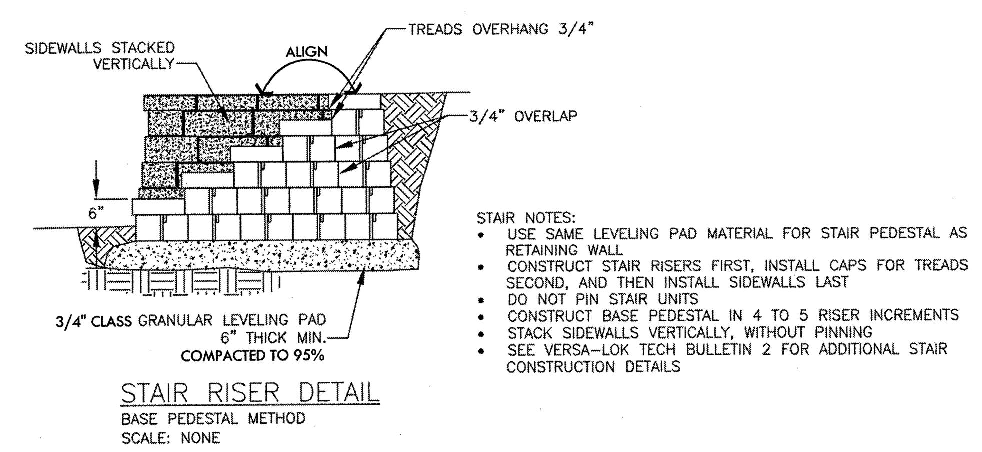

STAIR NOTES:
- USE SAME LEVELING PAD MATERIAL FOR STAIR PEDESTAL AS RETAINING WALL
- CONSTRUCT STAIR RISERS FIRST, INSTALL CAPS FOR TREADS SECOND, AND THEN INSTALL SIDEWALLS LAST
- DO NOT PIN STAIR UNITS
- CONSTRUCT BASE PEDESTAL IN 4 TO 5 RISER INCREMENTS
- STACK SIDEWALLS VERTICALLY, WITHOUT PINNING
- SEE VERSA-LOK TECH BULLETIN 2 FOR ADDITIONAL STAIR CONSTRUCTION DETAILS

STAIR RISER DETAIL
BASE PEDESTAL METHOD
SCALE: NONE

THESE PRELIMINARY DETAILS ARE INTENDED AS AN AID IN DESIGNING ATTRACTIVE, DURABLE RETAINING WALLS WITH VERSA-LOK UNITS. FINAL DETERMINATION OF THE SUITABILITY OF ANY INFORMATION OR MATERIAL FOR THE USE CONTEMPLATED, AND ITS MANNER OF USE, IS THE SOLE RESPONSIBILITY OF THE USER. A FINAL PROJECT SPECIFIC DESIGN SHOULD BE PREPARED BY A QUALIFIED, LICENSED, PROFESSIONAL ENGINEER.

VERSA-LOK® Retaining Wall Systems
(800)770-4525 fax(651)770-4089 6348 Hwy36 Ste1, Oakdale,MN 55128 Solid Solutions.™

VERSA-LOK STANDARD DETAILS
STAIR RISER DETAIL
SCALE: 1/2"=1' DRAWN BY: PPS DATE: 10/2007

N VERSA-LOK STEPS AT PATH

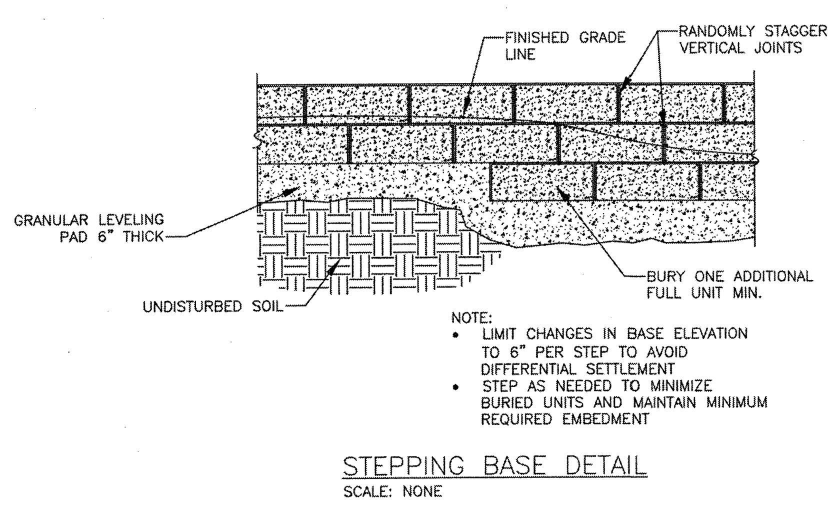

NOTE:
- LIMIT CHANGES IN BASE ELEVATION TO 6" PER STEP TO AVOID DIFFERENTIAL SETTLEMENT
- STEP AS NEEDED TO MINIMIZE BURIED UNITS AND MAINTAIN MINIMUM REQUIRED EMBEDMENT

STEPPING BASE DETAIL
SCALE: NONE

THESE PRELIMINARY DETAILS ARE INTENDED AS AN AID IN DESIGNING ATTRACTIVE, DURABLE RETAINING WALLS WITH VERSA-LOK UNITS. FINAL DETERMINATION OF THE SUITABILITY OF ANY INFORMATION OR MATERIAL FOR THE USE CONTEMPLATED, AND ITS MANNER OF USE, IS THE SOLE RESPONSIBILITY OF THE USER. A FINAL PROJECT SPECIFIC DESIGN SHOULD BE PREPARED BY A QUALIFIED, LICENSED, PROFESSIONAL ENGINEER.

VERSA-LOK® Retaining Wall Systems
(800)770-4525 fax(651)770-4089 6348 Hwy36 Ste1, Oakdale,MN 55128 Solid Solutions.™

VERSA-LOK STANDARD DETAILS
STEPPING BASE
SCALE: 1/2"=1' DRAWN BY: PPS DATE: 10/2007

M VERSA-LOK STEPPING BASE

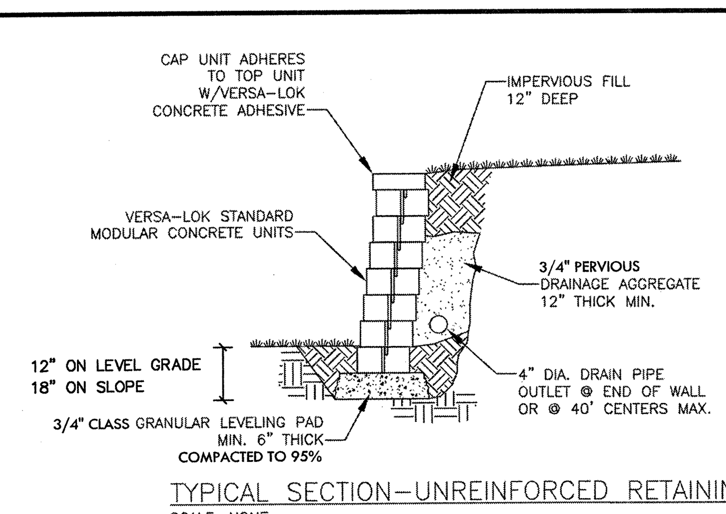

TYPICAL SECTION–UNREINFORCED RETAINING WALL
SCALE: NONE

NOTE:
CONTRACTOR SHALL REFER TO MANUFACTURER'S STRUCTURAL DETAILS AND SPECIFICATIONS FOR DIFFERING WALL HEIGHTS.

THESE PRELIMINARY DETAILS ARE INTENDED AS AN AID IN DESIGNING ATTRACTIVE, DURABLE RETAINING WALLS WITH VERSA-LOK UNITS. FINAL DETERMINATION OF THE SUITABILITY OF ANY INFORMATION OR MATERIAL FOR THE USE CONTEMPLATED, AND ITS MANNER OF USE, IS THE SOLE RESPONSIBILITY OF THE USER. A FINAL PROJECT SPECIFIC DESIGN SHOULD BE PREPARED BY A QUALIFIED, LICENSED, PROFESSIONAL ENGINEER.

VERSA-LOK® Retaining Wall Systems
(800)770-4525 fax(651)770-4089 6348 Hwy36 Ste1, Oakdale,MN 55128 Solid Solutions.™

VERSA-LOK STANDARD DETAILS
UNREINFORCED SECTION
SCALE: 1/2"=1' DRAWN BY: PPS DATE: 10/2007

L VERSA-LOK UNIT RETAINING WALL

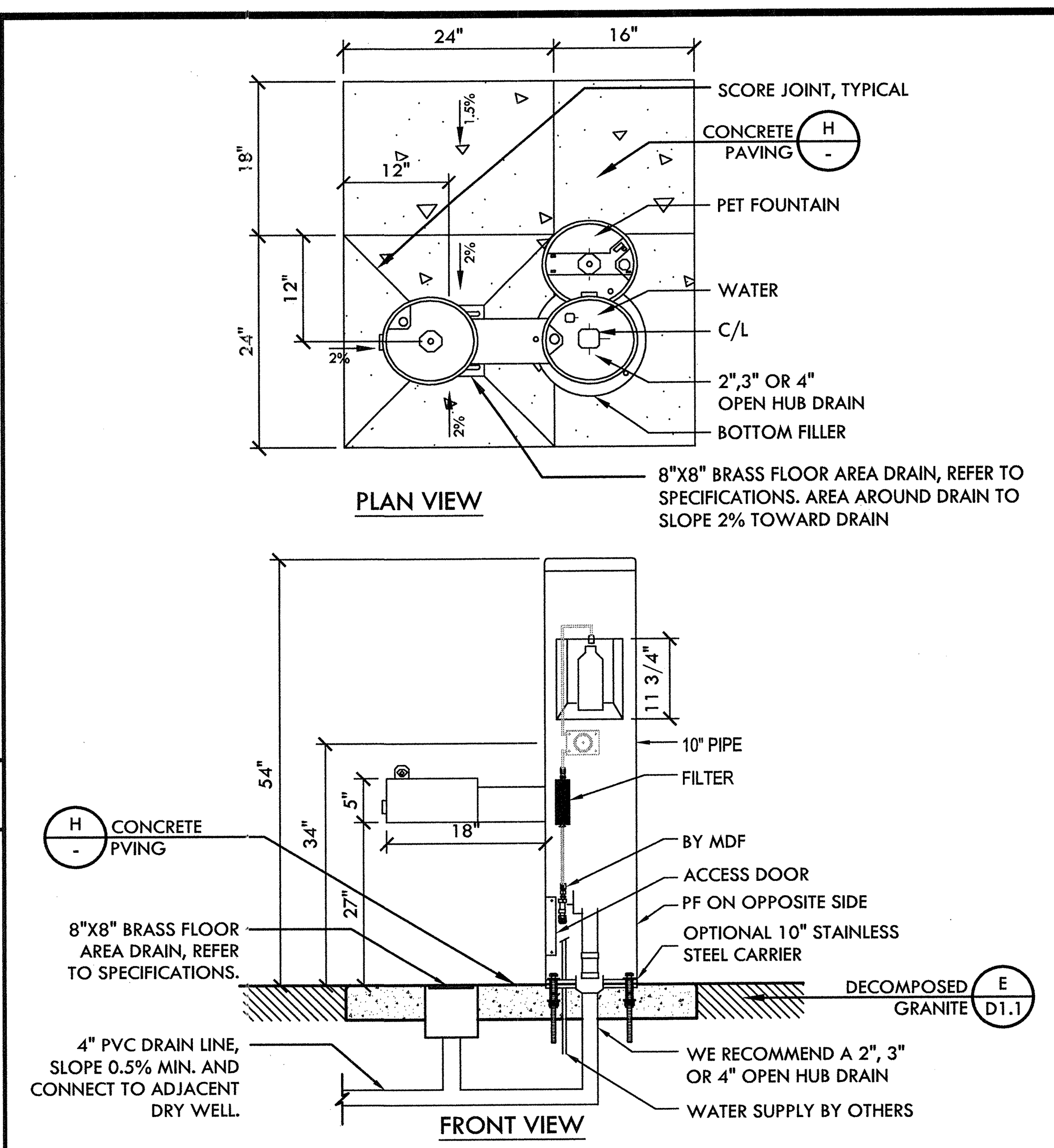

NOTES:
1. OPTIONAL STAINLESS STEEL SURFACE CARRIER RECOMMENDED.
2. INSTALLATION TO BE COMPLETED IN ACCORDANCE WITH MANUFACTURER'S SPECIFICATIONS.
3. DO NOT SCALE DRAWING.
4. ALL INFORMATION CONTAINED HEREIN WAS CURRENT AT THE TIME OF DEVELOPMENT BUT MUST BE REVIEWED AND APPROVED BY THE PRODUCT MANUFACTURER TO BE CONSIDERED ACCURATE.
5. CONTRACTOR'S NOTE: FOR PRODUCT AND COMPANY INFORMATION VISIT www.CADdetails.com/info AND ENTER REFERENCE NUMBER 3354-17.7.

K DRINKING FOUNTAIN, WATER BOTTLE FILLING STATION AND PET STATION — NTS

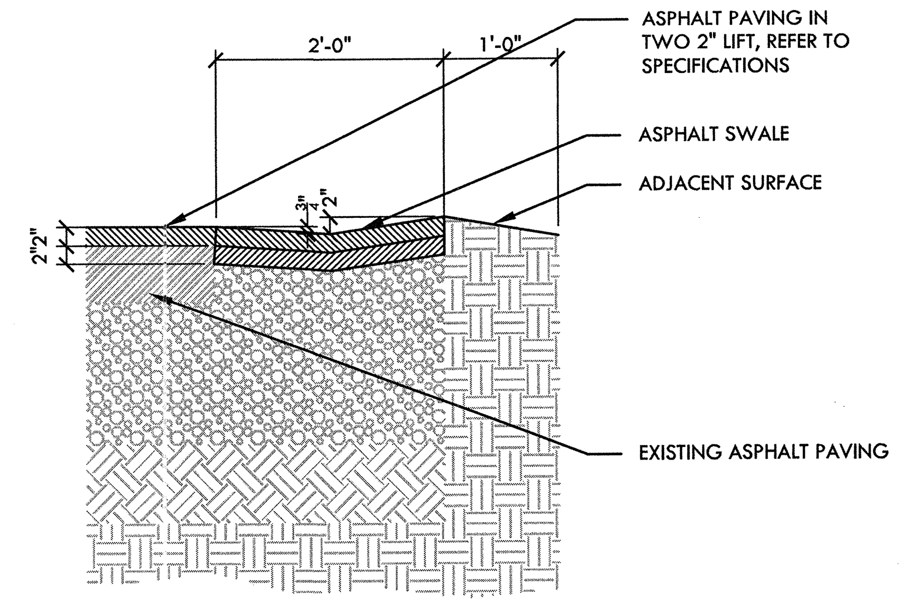

J ASPHALT SWALE — NTS

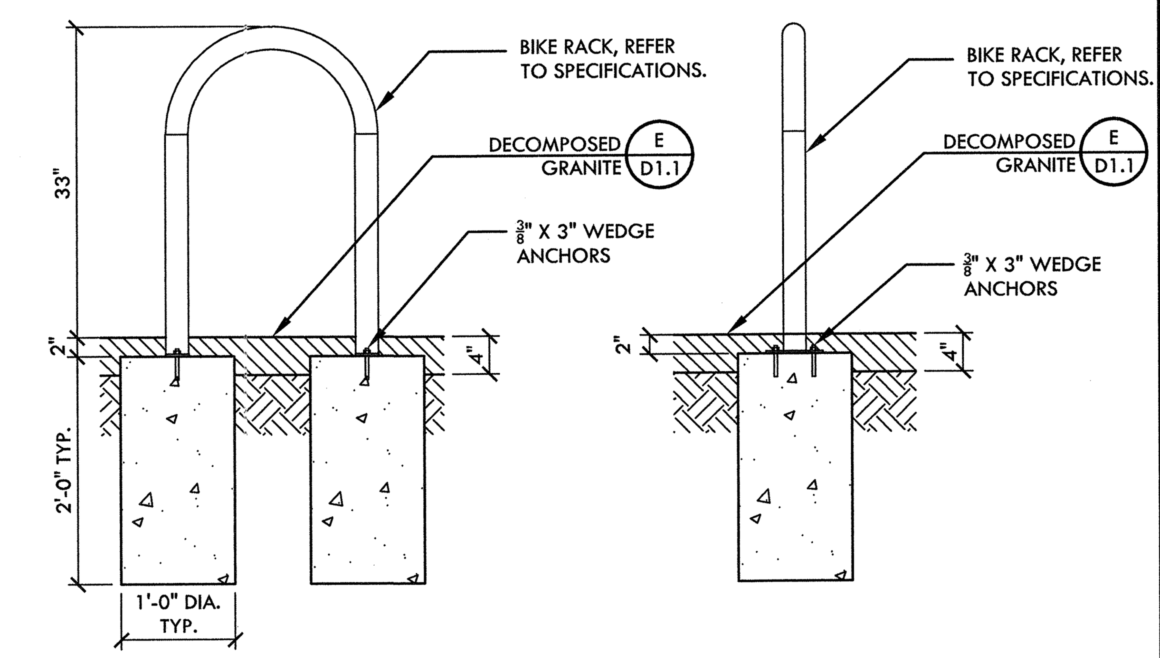

NOTE:
1. CITY IS TO PROVIDE BIKE RACKS.
2. INSTALL PER MANUFACTURER'S RECOMMENDATIONS.
2. REFER TO SPECIFICATIONS FOR MORE INFORMATION.

I BIKE RACK — NTS

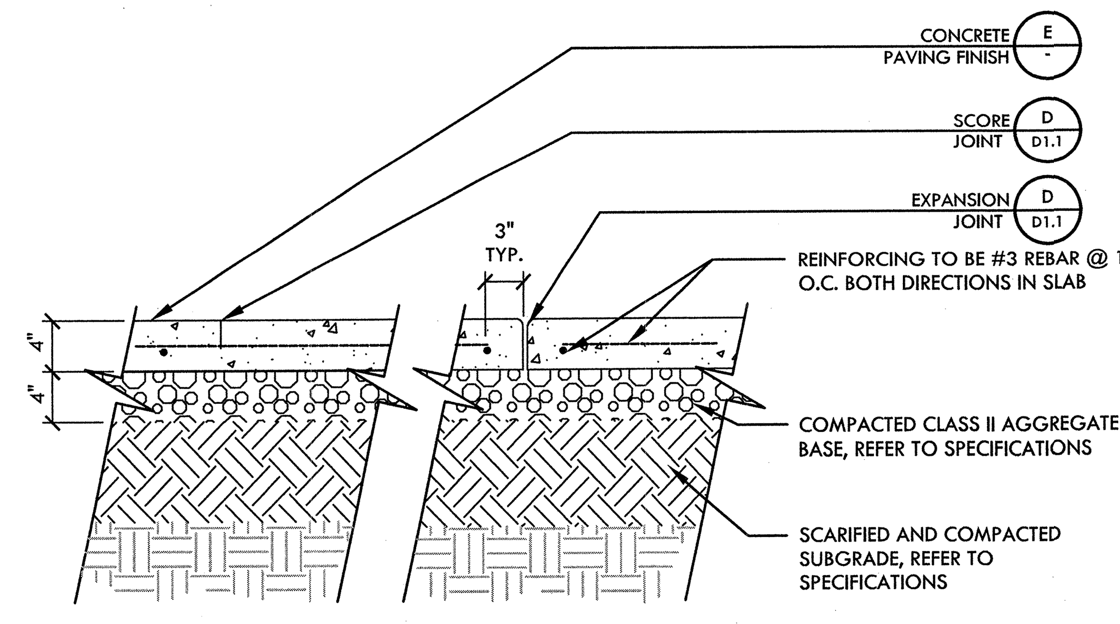

NOTE:
PROVIDE SCORE JOINTS 5' O.C. AND 10' O.C. FOR FIBER EXPANSION JOINT UNLESS OTHERWISE NOTED.

H CONCRETE PAVING - PEDESTRIAN — NTS

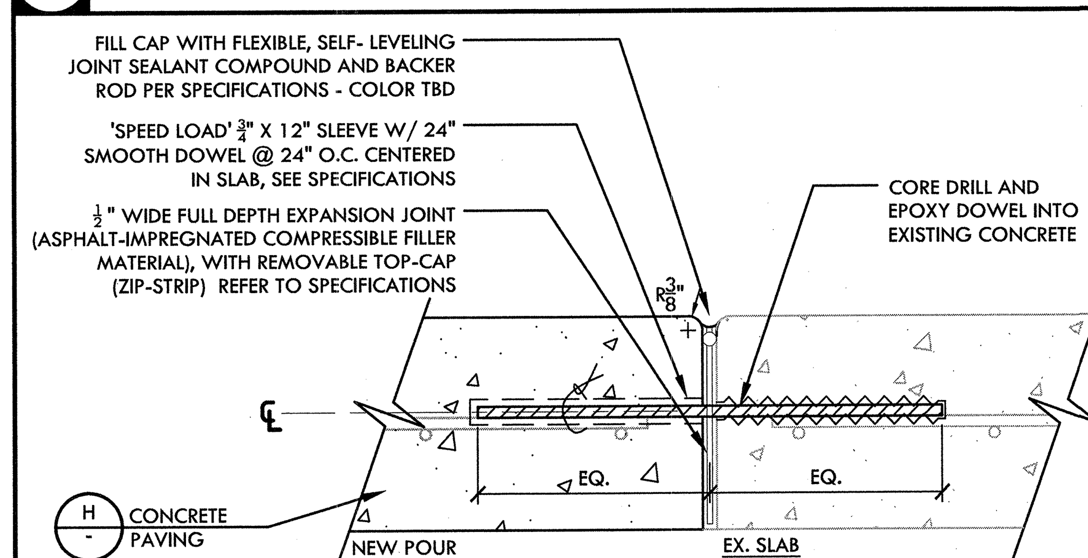

G DOWEL JOINT — NTS

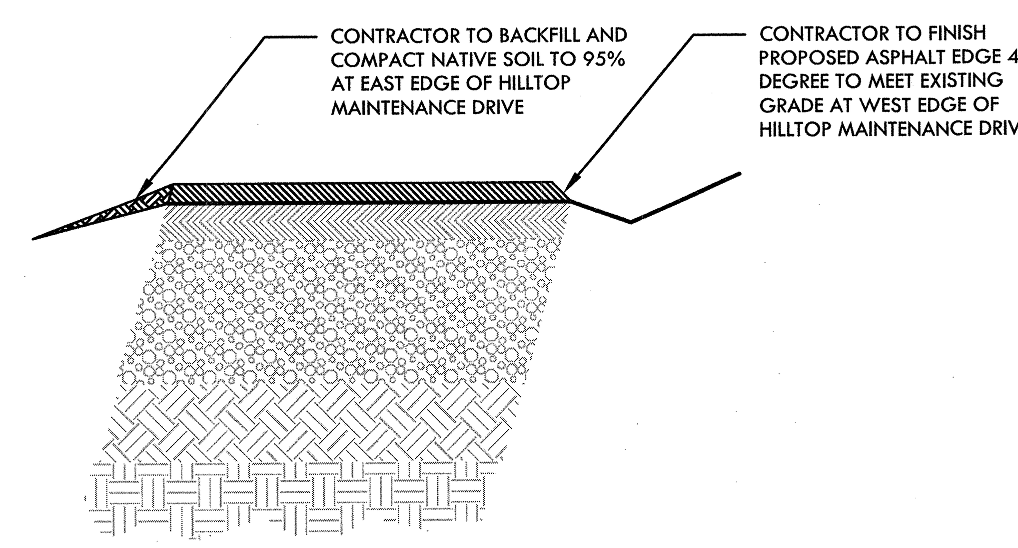

F ASPHALT LIFT - EDGE CONDITION — NTS

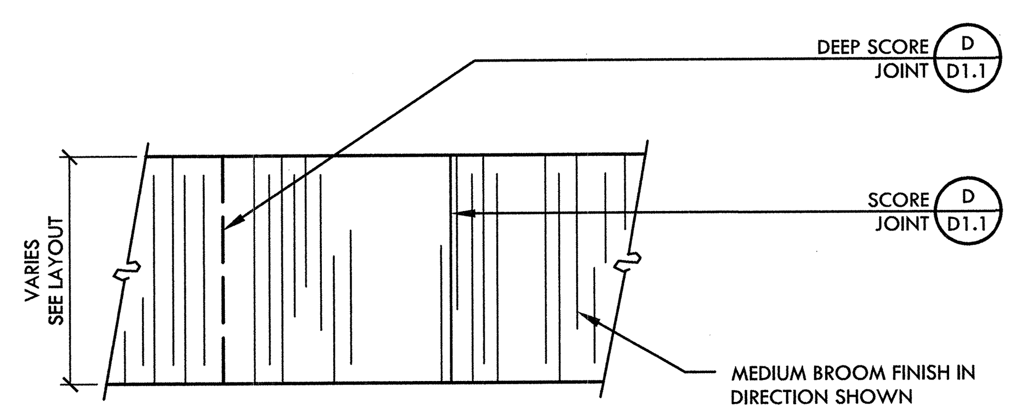

E CONCRETE PAVING FINISH — NTS

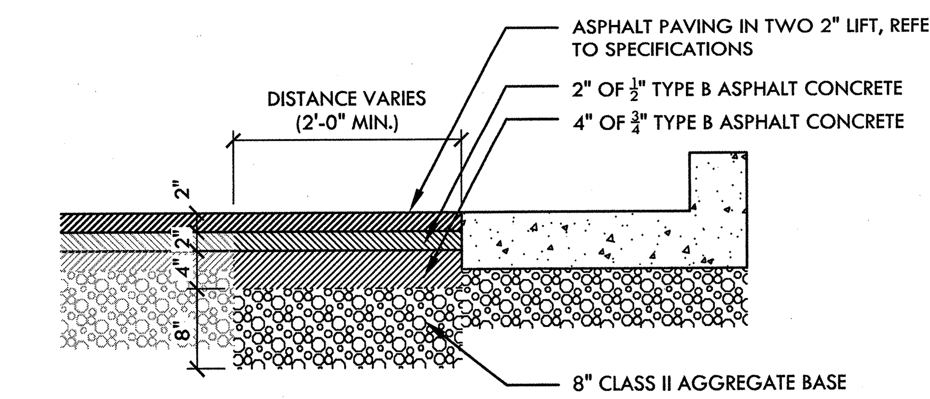

NOTE:
TACK COAT ALL EXISTING ASPHALT TO BE OVERLAID AND VERTICAL EDGES PRIOR TO PLACEMENT OF ASPHALT.

D PAVEMENT TRANSITION — NTS

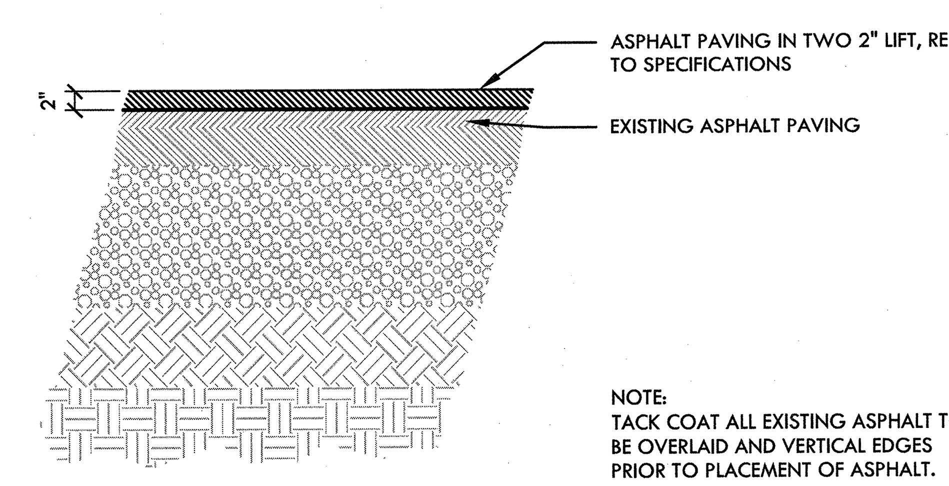

NOTE:
TACK COAT ALL EXISTING ASPHALT TO BE OVERLAID AND VERTICAL EDGES PRIOR TO PLACEMENT OF ASPHALT.

C ASPHALT LIFT - VEHICULAR — NTS

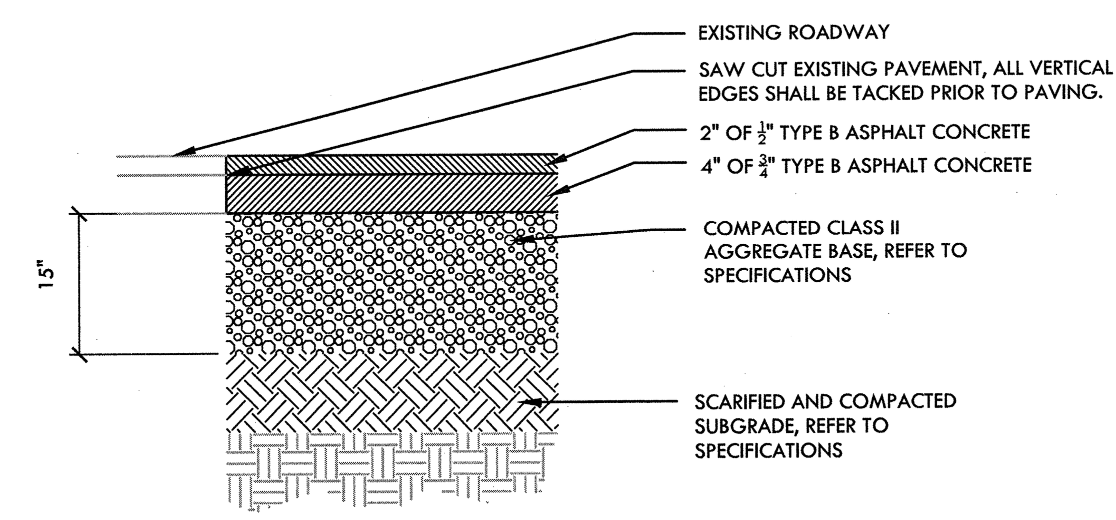

B ASPHALT PAVING - VEHICULAR — NTS

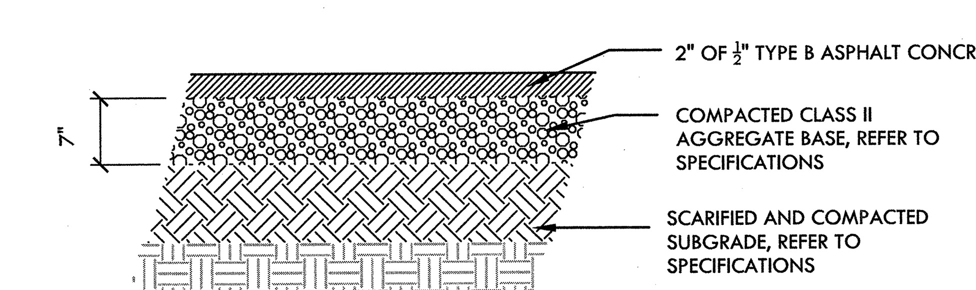

A ASPHALT PAVING - PEDESTRIAN — NTS

REGISTERED LANDSCAPE ARCHITECT
DEREK McKEE
No. 4148
Signature
EXPIRATION DATE: DEC. 2017
STATE OF CALIFORNIA

NO.	DESCRIPTION	DATE	BY
	Revisions		

WORK ACCEPTED: INSPECTOR:
BY: DATE:

DRAWN: RK/JL/QH DESIGN: CMES
CHECKED: CMES / DM
APPROVED: (signature) DATE: 12/15/16
KARL D. BJARKE– CITY ENGINEER
RCE 39416 EXP. 12/31/2017
HOR: N/A
VERT: N/A
JOB NUMBER: 135013

City of Morgan Hill
Public Works Department
CITY OF MORGAN HILL
17575 Peak Ave. Morgan Hill, CA 95037 (408)778–6480, Fax (408)779–7236

VERDE DESIGN
LANDSCAPE ARCHITECTURE
CIVIL ENGINEERING
SPORT PLANNING & DESIGN
2455 The Alameda, Ste. 200
Santa Clara, CA 95050
tel: 408.985.7200
fax: 408.985.7260
www.verdedesigninc.com

DEL MONTE AVE AND WEST 3RD STREET, MORGAN HILL, CA 95037

CONSTRUCTION AND SITE FURNISHING DETAILS
HILLTOP PARK

FILE NUMBER: 1520400
PRINT DATE: 12/07/16
SHEET NUMBER: D1.3

BID DRAWINGS

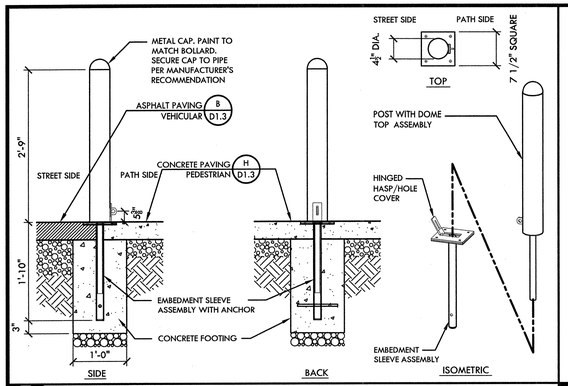

N REMOVABLE BOLLARD — NTS

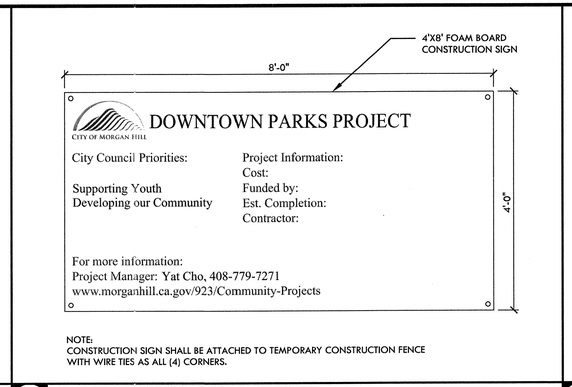

NOTE:
CONSTRUCTION SIGN SHALL BE ATTACHED TO TEMPORARY CONSTRUCTION FENCE WITH WIRE TIES AS ALL (4) CORNERS.

J CONSTRUCTION SIGN — NTS

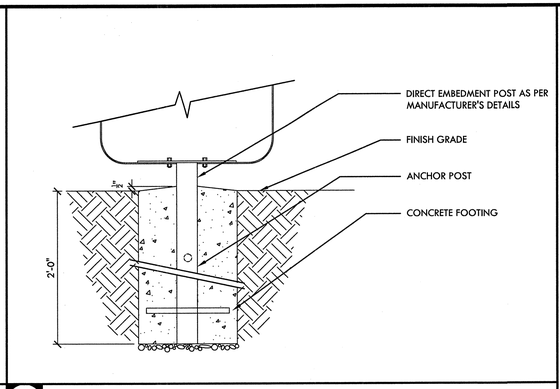

G TRASH AND RECYCLE RECEPTACLES FOOTING — NTS

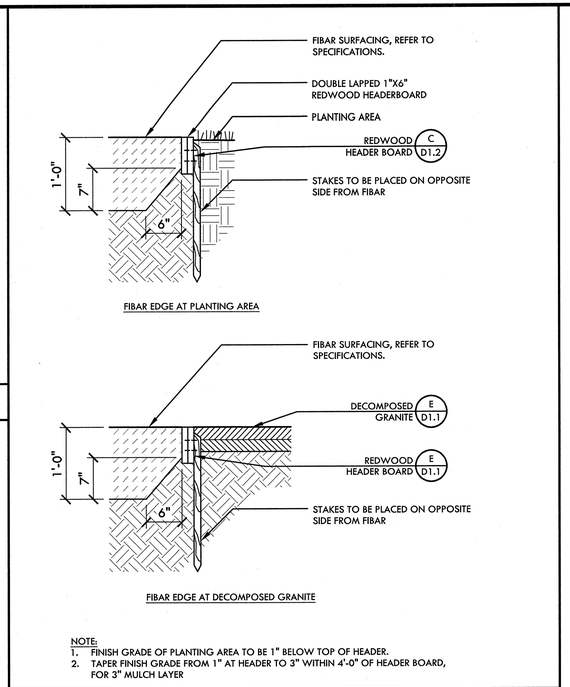

NOTE:
1. FINISH GRADE OF PLANTING AREA TO BE 1" BELOW TOP OF HEADER.
2. TAPER FINISH GRADE FROM 1" AT HEADER TO 3" WITHIN 4'-0" OF HEADER BOARD, FOR 3" MULCH LAYER

C FIBAR SURFACING EDGE CONDITIONS — NTS

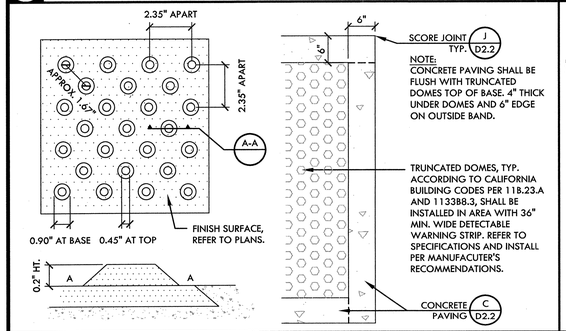

NOTE:
CONCRETE PAVING SHALL BE FLUSH WITH TRUNCATED DOMES TOP OF BASE. 4" THICK UNDER DOMES AND 6" EDGE ON OUTSIDE BAND.

M TRUNCATED DOMES — NTS

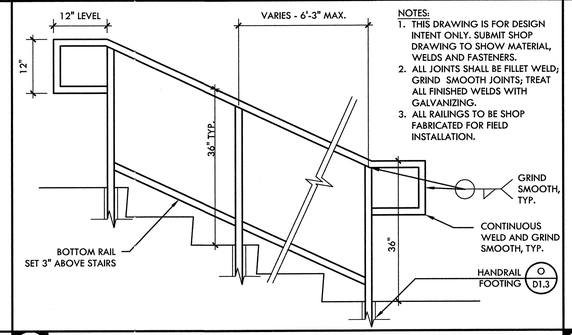

NOTES:
1. THIS DRAWING IS FOR DESIGN INTENT ONLY. SUBMIT SHOP DRAWING TO SHOW MATERIAL, WELDS AND FASTENERS.
2. ALL JOINTS SHALL BE FILLET WELD; GRIND SMOOTH JOINTS; TREAT ALL FINISHED WELDS WITH GALVANIZING.
3. ALL RAILINGS TO BE SHOP FABRICATED FOR FIELD INSTALLATION.

I HANDRAIL — NTS

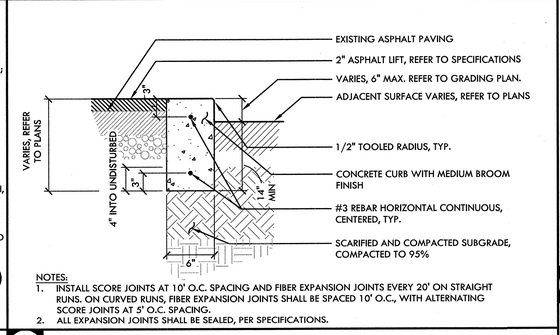

NOTES:
1. INSTALL SCORE JOINTS AT 10' O.C. SPACING AND FIBER EXPANSION JOINTS EVERY 20' ON STRAIGHT RUNS. ON CURVED RUNS, FIBER EXPANSION JOINTS SHALL BE SPACED 10' O.C., WITH ALTERNATING SCORE JOINTS AT 5' O.C. SPACING.
2. ALL EXPANSION JOINTS SHALL BE SEALED, PER SPECIFICATIONS.

F 6" WIDE CONCRETE CURB — NTS

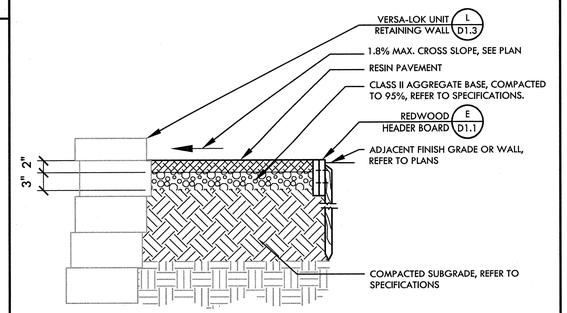

B RESIN PAVEMENT — NTS

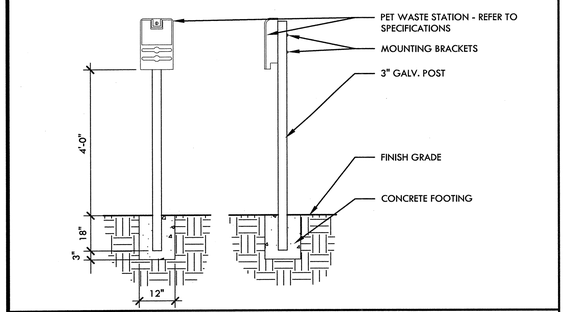

L PET WASTE STATION — 1/2" = 1'-0"

NOT USED

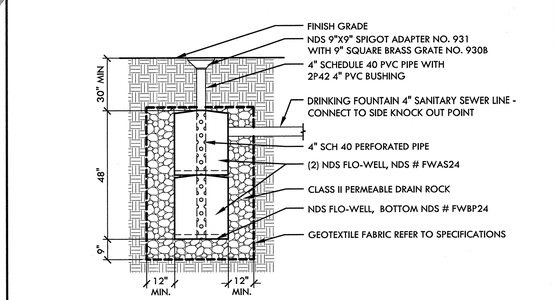

E DRYWELL - DRINKING FOUNTAIN — NTS

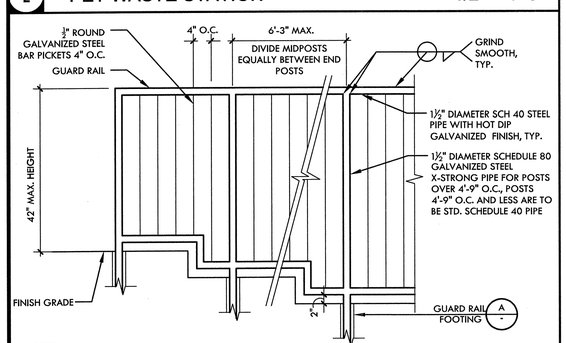

NOTES:
1. THIS DRAWING IS FOR DESIGN INTENT ONLY. SUBMIT SHOP DRAWING TO SHOW MATERIAL, WELDS AND FASTENERS.
2. ALL JOINTS SHALL BE FILLET WELD; GRIND SMOOTH JOINTS; TREAT ALL FINISHED WELDS WITH GALVANIZING.
3. ALL RAILINGS TO BE SHOP FABRICATED FOR FIELD INSTALLATION.

K GUARD RAIL — NTS

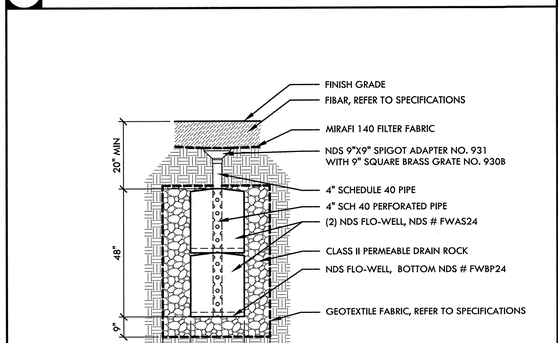

D DRYWELL WITH DRAIN INLET — NTS

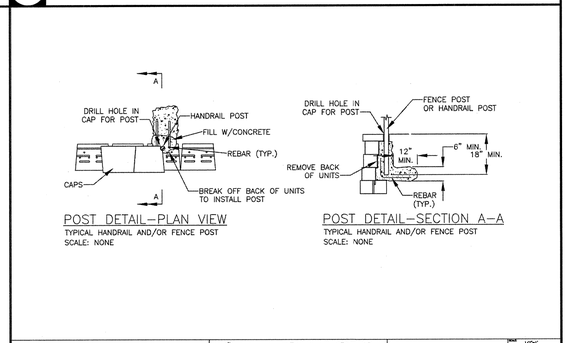

THESE PRELIMINARY DETAILS ARE INTENDED AS AN AID IN DESIGNING ATTRACTIVE, DURABLE RETAINING WALLS WITH VERSA-LOK UNITS. FINAL DETERMINATION OF SUITABILITY OF ANY INFORMATION OR MATERIAL FOR ANY PROJECT IS THE SOLE RESPONSIBILITY OF THE OWNER OR THE RESPONSIBILITY OF THE USER. A FINAL, PROJECT SPECIFIC DESIGN SHOULD BE PREPARED BY A QUALIFIED, LICENSED, PROFESSIONAL ENGINEER.

VERSA-LOK® Retaining Wall Systems
SINGLE-MUSH INCREDIBLE-WALL
6385 FOLSOM BLVD, SACRAMENTO, CA 95819
Solid Solutions.

VERSA-LOK STANDARD DETAILS
POST DETAIL

A GUARD RAIL FOOTING

REGISTERED LANDSCAPE ARCHITECT — ALFRED MORRISON — No. 1148 — Signature — EXPIRATION DATE: DEC. 2017 — STATE OF CALIFORNIA

NO.	DESCRIPTION	DATE	BY

Revisions

WORK ACCEPTED: INSPECTOR:
BY: DATE:

DRAWN: RK/JL/QH
DESIGN: CMES
CHECKED: CMES / DM
APPROVED: DATE: 12/10/16
KARL D. BAUNE - CITY ENGINEER RCE 39416 EXP. 12/31/2017

HOR: N/A
VERT: N/A
JOB NUMBER: 135013

CITY OF MORGAN HILL
City of Morgan Hill
Public Works Department
17575 Peak Ave. Morgan Hill, CA 95037 (408)778-6480, Fax (408)779-7236

VERDE DESIGN
LANDSCAPE ARCHITECTURE
CIVIL ENGINEERING
SPORT PLANNING & DESIGN
2455 The Alameda, Ste. 200
Santa Clara, CA 95050
tel: 408.985.7200
fax: 408.985.7290
www.verdedesigninc.com

DEL MONTE AVE AND WEST 3RD STREET, MORGAN HILL, CA 95037

CONSTRUCTION AND SITE FURNISHING DETAILS HILLTOP PARK

FILE NUMBER: 1520400
PRINT DATE: 12/07/16
SHEET NUMBER: D1.4

BID DRAWINGS

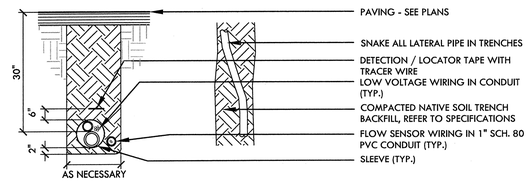

I IRRIGATION PIPE TRENCHING UNDER PAVEMENT NTS

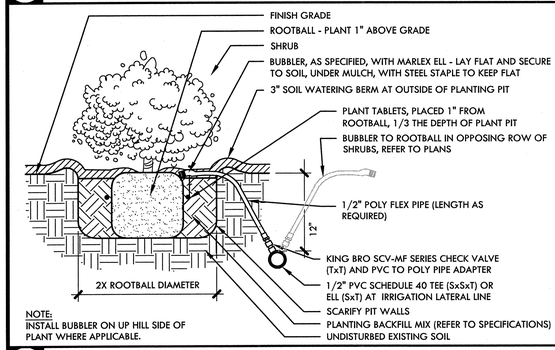

NOTE:
INSTALL BUBBLER ON UP HILL SIDE OF PLANT WHERE APPLICABLE.

H SHRUB PLANTING WITH BUBBLER NTS

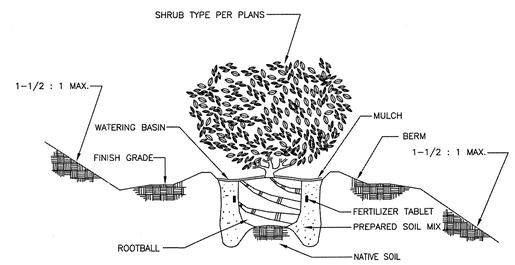

NOTES:

1. SET CROWN 1-1/2" ABOVE FINISH GRADE TO ALLOW FOR SETTLEMENT.
2. WELL DEVELOPED SHRUB ROOTBALL; LIGHTLY SCARIFY PERIMETER.
3. SLOW RELEASE FERTIZER TABLET AS PERSPECIFICATIONS.
4. 4" HIGH BERM TEMPORARY WATER BASIN. INSIDE DIAMETER TO EQUAL ROOTBALL DIAMETER.
5. PLANTING HOLE; TWO TIMES DIAMETER AND DEPTH OF SHRUB ROOTBALL. SCARIFY SIDES AND BOTTOM.
6. MULCH AS PER SPECIFICATIONS.
7. BACKFILL MIXTURE AS PER SPECIFICATIONS.

City of Morgan Hill Public Works Department			DRAWING NO.
CITY ENGINEER	8/6/98 DATE	3/15/07 REVISED	L-17

SHRUB PLANTING

F SHRUB PLANTING

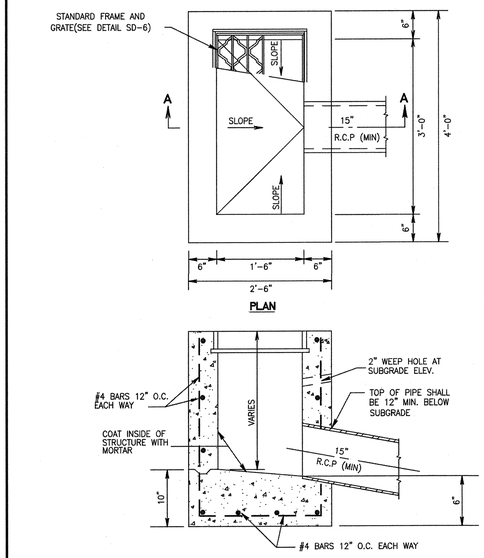

NOTES:

1. LARGER SIZE INLETS MAY BE REQUIRED AS INDIVIDUAL PROJECT DESIGN DICTATES.
2. DIMENSIONS SHALL BE SAME AS CURB INLET (SD-5), IF DROP INLET IS TO BE USED AS A FUTURE CURB INLET.

City of Morgan Hill Public Works Department			DRAWING NO.
CITY ENGINEER	4/1/96 DATE	8/6/98 REVISED	SD-4

DROP INLET

D DROP INLET

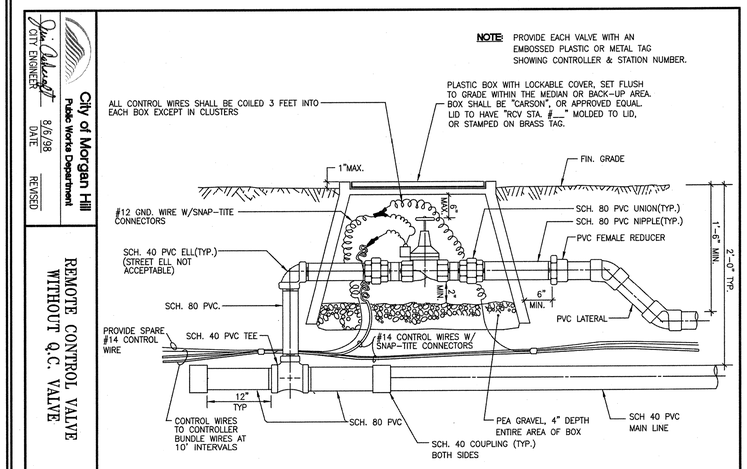

NOTE: CONTROL VALVE TO BE GRISWOLD 2000 SERIES OR APPROVED EQUAL.

NOTE: HEAVY COAT ALL THREADED AREAS WITH JOINT COMPOUND.

City of Morgan Hill Public Works Department			DRAWING NO.
CITY ENGINEER	8/6/98 DATE	REVISED	L-9

REMOTE CONTROL VALVE WITHOUT Q.C. VALVE

B REMOTE CONTROL VALVE

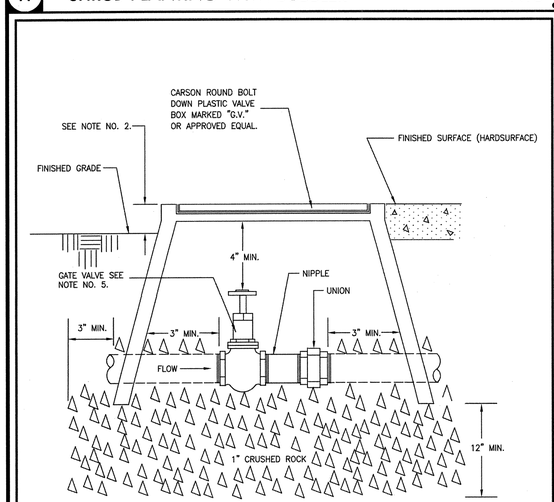

NOTES:

1. AREA AROUND BOX CAN EITHER BE PLANTED, HARDSURFACE OR A COMBINATION.
2. TOP OF BOX:
   1/2" ABOVE GRADE OR LAWN.
   1" ABOVE GRADE FOR GROUND COVER OR SHRUBS.
3. CLOSE NIPPLES SHALL NOT BE USED.
4. CRUSHED ROCK SHALL COVER VALVE BOX PIPE OPENINGS TO PREVENT SOIL ENTRY.
5. GATE VALVE SHALL BE "RED & WHITE", OR APPROVED EQUAL.

City of Morgan Hill Public Works Department			DRAWING NO.
CITY ENGINEER	8/6/98 DATE	REVISED	L-8

GATE VALVE

G GATE VALVE

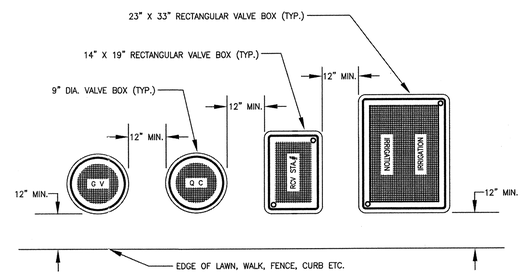

NOTES:

1. CENTER BOX OVER REMOTE CONTROL VALVE TO FACILITATE SERVICING VALVE.
2. SET BOXES 1" ABOVE FINISH GRADE OR MULCH COVER IN GROUND COVER / SHRUB AREA AND FLUSH WITH FINISH GRADE IN TURF AREAS.
3. SET RCV AND VALVE BOX ASSEMBLY IN GROUND COVER / SHRUB AREA WHERE POSSIBLE. INSTALL IN LAWN AREA ONLY IF GROUND COVER DOES NOT EXIST ADJACENT TO LAWN.
4. SET BOXES PARALLEL TO EACH OTHER AND PERPENDICULAR TO EDGE.
5. AVOID COMPACTING SOIL AROUND AROUND VALVE BOX EDGES TO PREVENT COLLAPSE AND DEFORMATION OF VALVE BOX SIDES.
6. ALL BOXES SHALL BE "CARSON" OR APPROVED EQUAL, AND BE EQUIPPED WITH BOLT DOWN LIDS.
7. ALL VALVE BOX LIDS SHALL IDENTIFY EQUIPMENT CONTAINED IN BOX BY MOLDING OR BRASS TAG TO LID AS FOLLOWS:
   GATE VALVE – "G.V."
   QUICK COUPLER – "Q.C."
   REMOTE CONTROL VALVE – "R.C.V. STA. #___"
   MISCELANEOUS ELECTRICAL EQUIPMENT – "ELECTRICAL"
   MISCELANEOUS IRRIGATION EQUIPMENT – "IRRIGATION"

City of Morgan Hill Public Works Department			DRAWING NO.
CITY ENGINEER	8/6/98 DATE	REVISED	L-14

VALVE BOX LOCATION

E VALVE BOX LOCATION

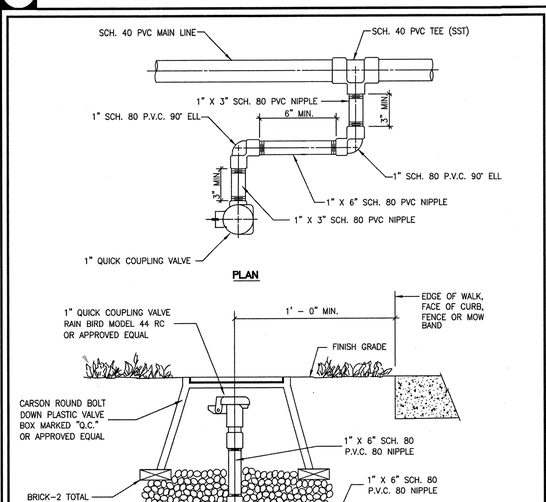

NOTES: 1. ALL PIPING TUBE TO BE 1" OR LARGER.
2. VALVE BOX LID TO HAVE "Q.C." MOLDED INTO TOP OF LID OR BRASS TAG INSTALLED ON LID MARKED "Q.C.".

City of Morgan Hill Public Works Department			DRAWING NO.
CITY ENGINEER	8/6/98 DATE	REVISED	L-7

1" QUICK COUPLING VALVE

C 1" QUICK COUPLING VALVE

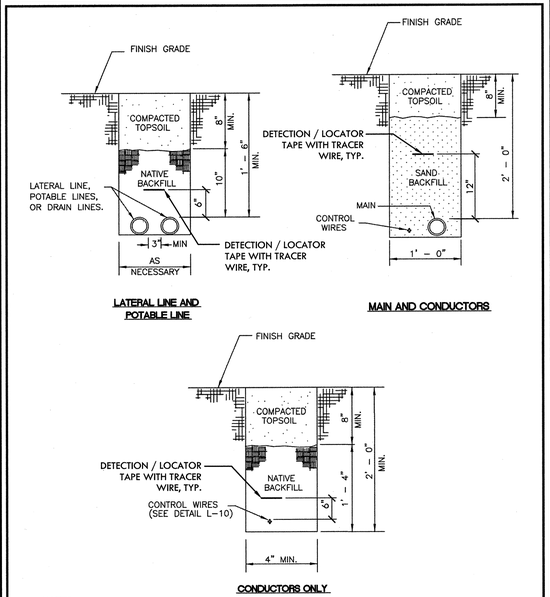

NOTES:
1. TAPE AND BUNDLE WIRING AT 10 FOOT INTERVALS.
2. NATIVE BACKFILL AND TOP SOIL TO BE FREE OF ROCK AND DEBRIS.(3/4" MAX. ROCK SIZE)

City of Morgan Hill Public Works Department			DRAWING NO.
CITY ENGINEER	8/6/98 DATE	6/8/00 REVISED	L-1

IRRIGATION AND DRAIN LINE TRENCH

A IRRIGATION AND DRAIN LINE TRENCH

REGISTERED LANDSCAPE ARCHITECT — DEREK MCKEE — No. 4146 — Signature — EXPIRATION DATE: DEC. 2017 — STATE OF CALIFORNIA

NO.	DESCRIPTION	DATE	BY

Revisions

WORK ACCEPTED: INSPECTOR:
BY: DATE:

DRAWN: RK/JL/QH | DESIGN: CMES | HOR: N/A
CHECKED: CMES / DM | VERT: N/A
APPROVED: | DATE: 12/15/16 | JOB NUMBER: 135013
KARL D. BAJAKE– CITY ENGINEER RCE 39416 EXP. 12/31/2017

City of Morgan Hill
Public Works Department
17575 Peak Ave. Morgan Hill, CA 95037 (408)778-6480, Fax (408)779-7236

VERDE DESIGN
LANDSCAPE ARCHITECTURE CIVIL ENGINEERING SPORT PLANNING & DESIGN
2455 The Alameda, Ste. 200 Santa Clara, CA 95050 tel: 408.985.7200 fax: 408.985.7290 www.verdedesigninc.com

DEL MONTE AVE AND WEST 3RD STREET, MORGAN HILL, CA 95037

IRRIGATION AND PLANTING DETAILS
HILLTOP PARK

FILE NUMBER: 1520400
PRINT DATE: 12/07/16
SHEET NUMBER: D2.1

BID DRAWINGS

SYMBOL LIST:

Symbol	Description
1 / E1.1	PLAN, DETAIL OR SECTION DESIGNATION.
201	ROOM NUMBER.
1	SHEET REFERENCE SYMBOL - SEE ASSOCIATED NOTE ON SAME SHEET.
3	FEEDER SCHEDULE SYMBOL.
CH / 1	MECHANICAL EQUIPMENT TAG.
A	INDICATES FIXTURE TYPE

LUMINAIRE SYMBOLS

Symbol	Description
	LUMINAIRE - SEE SCHEDULE.
	LUMINAIRE - SEE SCHEDULE.
	LUMINAIRE - SEE SCHEDULE.
	LUMINAIRE - SEE SCHEDULE.
	POLE MOUNTED LUMINAIRE - SEE SCHEDULE.
	POLE MOUNTED LUMINAIRE - SEE SCHEDULE.
	LUMINAIRE - SEE SCHEDULE.
	LUMINAIRE - SEE SCHEDULE.
	LUMINAIRE WALL MOUNTED-SEE SCHEDULE.
	EMERGENCY LUMINAIRE - PROVIDE EMERGENCY BATTERY BALLAST
EM	EMERGENCY LUMINAIRE - PROVIDE EMERGENCY BATTERY BALLAST
	EMERGENCY LUMINAIRE - PROVIDE EMERGENCY BATTERY BALLAST
	EMERGENCY LUMINAIRE - PROVIDE EMERGENCY BATTERY BALLAST
	EMERGENCY LUMINAIRE WALL MOUNTED- PROVIDE EM. BATTERY BALLAST
	EXIT LIGHT SINGLE FACE - SEE SCHEDULE.
	EXIT LIGHT SINGLE FACE (WITH ARROW)- SEE SCHEDULE.
	EXIT LIGHT (DOUBLE FACED WITH ARROW)- SEE SCHEDULE.
	EMERGENCY BATTERY PACK EXIT LIGHT INSTALL AS DIRECTED.

TYPICAL LUMINAIRE NOMENCLATURE

3a — INDICATES SWITCHING DESIGNATION

└ INDICATES CIRCUIT NUMBER

SWITCH SYMBOLS

Symbol	Description
$	SINGLE POLE SWITCH, + 48" AFF TO THE TOP OF THE OUTLET BOX UON.
$a	SINGLE POLE SWITCH, + 48" AFF TO THE TOP OF THE OUTLET BOX, a = CIRCUIT CONTROLLED.
$3	THREE WAY SWITCH + 48" AFF TO THE TOP OF THE OUTLET BOX UON.
$4	FOUR WAY SWITCH + 48" AFF TO THE TOP OF THE OUTLET BOX UON.
	MOTOR RATED SWITCH
LVS a	WALL MOUNTED LOW VOLTAGE "DATALINE SWITCH =48" FROM TOP OF BOX, UON, a = CIRCUIT CONTROLLED

RECEPTACLE SYMBOLS

Symbol	Description
	CONVENIENCE RECEPTACLE - DUPLEX AT + 18" AFF UON.
	GFCI CONVENIENCE RECEPTACLE - DUPLEX.
	RECEPTACLE - DOUBLE DUPLEX AT + 18" AFF UON.
C	RECEPTACLE - DOUBLE DUPLEX ON CEILING
	SINGLE RECEPTACLE - NEMA 5-20R UON, AT + 18" AFF UON.
	SINGLE RECEPTACLE - NEMA L21 - 208 VOLT, THREE PHASE, 5 WIRE, AT + 18" AFF UON.
	3-CHANNEL SURFACE RACEWAY, INSTALL AT +36" AFF UON. RACEWAY SHALL BE WIREMOLD #5500.

POWER DISTRIBUTION SYMBOLS

Symbol	Description
	PANELBOARD - SURFACE OR FLUSH MOUNTED.
LCP	LIGHTING CONTROL CABINET.
EM	EMERGENCY POWER INVERTER.
J	JUNCTION BOX - CEILING OR WALL MOUNTED, SIZE PER CEC, TAPE AND TAG WIRES.
	MAIN SWITCHBOARD OR DISTRIBUTION PANEL.
M	MOTOR
30	RATING AS INDICATED.
60	UNFUSED DISCONNECT SWITCH - RATING AS INDICATED.
100	FUSED DISCONNECT SWITCH - SIZE FUSES PER MOTOR MANUFACTURER'S RECOMMENDATIONS. RATING AS INDICATED.
II	MAGNETIC STARTER - NEMA SIZE INDICATED.
T	TRANSFORMER - SEE SINGLE LINE FOR REQUIREMENTS.
	GROUND ROD.
P	IN-GRADE ELECTRICAL PULL BOX WITH TRAFFIC RATED LID.
L	IN-GRADE LIGHTING PULL BOX WITH TRAFFIC RATED LID.
S	IN-GRADE SIGANL PULL BOX WITH TRAFFIC RATED LID.

POWER DISTRIBUTION SINGLE LINE SYMBOLS

Symbol	Description
	DRAW-OUT CIRCUIT BREAKER.
	CIRCUIT BREAKER.
	FUSED SWITCH.
M	"PG&E" METER W/ CURRENT TRANSFORMER.
	TRANSFORMER.
	NORMALLY OPENED, AUXILIARY CONTACT.
	NORMALLY CLOSED, AUXILIARY CONTACT.
	AUTOMATIC TRANSFER SWITCH.
	EMERGENCY GENERATOR.

WIRING & CONDUIT RUN SYMBOLS

Symbol	Description
	CONDUIT - CONCEALED IN WALLS OR CEILING.
	CONDUIT - EXPOSED.
	CONDUIT - IN OR BELOW FLOOR: 3/4"MIN.
	EXISTING CONDUIT, CABLES OR DEVICE
#10 G	CONDUIT - HOME RUN TO PANEL, TERMINAL CABINET, ETC. RUNS MARKED WITH CROSSHATCHES INDICATE NUMBER OF #12 AWG WIRES. CROSSHATCH WITH SUBSCRIPT "G" INDICATES GREEN GROUND WIRE. SIZE CONDUIT ACCORDING TO SPECIFICATIONS AND APPLICABLE CODE. CROSSHATCHES WITH "#10" INDICATES WIRE SIZE OTHER THAN #12'S.
	FLEX CONDUIT WITH CONNECTION.
	CONDUIT - STUB UP.
	CONDUIT - STUB DOWN.
E E	CONDUIT EMERGENCY SYSTEM.
E	CAPPED CONDUIT.
	CONDUIT CONTINUATION.

GENERAL NOTES:

1. THE CONTRACTOR SHALL BE LICENSED BY THE STATE OF CALIFORNIA C-10 AND SHALL COMPLY WITH ALL APPLICABLE CODES AND REGULATIONS. MATERIALS AND EQUIPMENT SHALL BE U.L. LISTED AND LABELED FOR THE APPLICATION.
2. THE CONTRACTOR SHALL OBTAIN AND PAY FOR ALL PERMITS, LICENSES AND INSPECTION FEES REQUIRED BY THIS CONTRACT WORK.
3. PRIOR TO SUBMITTING A BID THE CONTRACTOR SHALL VISIT THE SITE, REVIEW THE EXISTING CONDITIONS AND ALLOW FOR LABOR, MATERIAL AND COORDINATION THAT IS NECESSARY TO PROVIDE A COMPLETE INSTALLATION OF EACH SYSTEM. THE CONTRACTOR SHALL OBTAIN AND BE FAMILIAR WITH ALL OTHER TRADES. THE CONTRACTOR SHALL BE RESPONSIBLE FOR ALL ELECTRICAL WORK NOTED AND CALLED OUT ON ALL CONTRACT DOCUMENTS. THE CONTRACTOR SHALL BE RESPONSIBLE FOR COORDINATION BETWEEN OTHER TRADES ON PROJECT.
4. THE CONTRACTOR SHALL BE RESPONSIBLE FOR THE SAFETY OF PERSONS AND PROPERTY AND SHALL PROVIDE INSURANCE COVERAGE AS NECESSARY FOR LIABILITY, PERSONAL, PROPERTY DAMAGE, TO FULLY PROTECT THE OWNER, ARCHITECT AND ENGINEER FROM ANY AND ALL CLAIMS RESULTING FROM THIS WORK.
5. THE CONTRACTOR SHALL MAINTAIN RECORD DRAWINGS AT THE PROJECT SITE INDICATING ALL MODIFICATIONS TO ELECTRICAL SYSTEMS. THE CONTRACTOR SHALL AT THE CONCLUSION OF THE PROJECT PROVIDE ACCURATE "AS-BUILT" DRAWINGS. "AS-BUILT" DRAWINGS SHALL SHOW ACTUAL CHANGES TO ORIGINAL ELECTRICAL DRAWING, SHOW LOCATIONS OF PULL BOXES, CONDUIT RUNS AND WIRING CHANGES. THE CONTRACTOR SHALL PROVIDE ONE (1) HARDCOPY SET OF DOCUMENT DRAWINGS AND ONE (1) SET OF DOCUMENT DRAWINGS IN ELECTRONIC CAD FILE THAT REPRESENTS THE ACTUAL "AS-BUILTS". CAD FILES SHALL BE AUTOCAD 2000 FORMAT.
6. ALL MATERIALS PROVIDED TO THE PROJECT SHALL BE NEW. THE CONTRACTOR SHALL BE RESPONSIBLE TO PROVIDE AND INSTALL ALL INCIDENTAL MATERIALS REQUIRED FOR A COMPLETE INSTALLATION.
7. THE CONTRACTOR SHALL PROVIDE TO THE LANDSCAPE ENGINEERS A CONSTRUCTION SCHEDULE OF ELECTRICAL WORK. THE CONSTRUCTION SCHEDULE SHALL IDENTIFY ALL SIGNIFICANT MILESTONES WITH COMPLETION DATES.
8. THE CONTRACTOR SHALL PROVIDE ALL REQUIRED "CUTTING, PATCHING, EXCAVATION, BACKFILL AND REPAIRS" NECESSARY TO RESTORE DAMAGED SURFACES TO EQUAL OR BETTER THAN ORIGINAL CONDITIONS EXISTING AT START OF WORK. THE CONTRACTOR SHALL CONTACT "UNDERGROUND SERVICES ALERT" FOR LOCATION OF EXISTING UTILITIES PRIOR TO COMMENCEMENT OF UNDERGROUND WORK.
9. THE CONTRACTOR SHALL BE RESPONSIBLE FOR PAINTING ALL EXPOSED CONDUITS AND ELECTRICAL EQUIPMENT. REFER TO ARCHITECTS PAINTING SECTION FOR REQUIREMENTS.
10. ALL ELECTRICAL EQUIPMENT INSTALLED OUTDOORS SHALL BE WEATHERPROOF. EXTERIOR CONDUITS RUN INTO BUILDINGS SHALL BE INSTALLED WITH FLASHING, CAULKED AND SEALED. CONDUITS FOR EXTERIOR ELECTRICAL DEVICES SHALL BE RUN INSIDE BUILDING UNLESS OTHERWISE NOTED ON DRAWINGS. ALL EXTERIOR CONDUITS SHALL BE "RSG" UNLESS OTHERWISE NOTED ON DRAWINGS.
11. ALL CONDUITS UNLESS OTHERWISE NOTED ON DRAWINGS SHALL HAVE AS A MINIMUM: TWO (2) #12'S WITH ONE (1) #12 GROUND. "TICK" MARKS SHOWN ON CIRCUITRY ARE FOR "ROUGH" ESTIMATING ONLY. THE CONTRACTOR SHALL BE RESPONSIBLE FOR ALL WIRES AND WIRE SIZES REQUIRED BY LATEST CODE.
12. COORDINATE ALL CONDUIT RUNS, ELECTRICAL EQUIPMENT AND PANELS WITH ALL OTHER WORK TO AVOID CONFLICTS.
13. SEE LANDSCAPE ENGINEER'S DOCUMENTS FOR EXACT PLACEMENT OF LIGHTING FIXTURES AND DEVICES. THE ELECTRICAL CONTRACTOR SHALL BE RESPONSIBLE FOR VERIFICATION OF CEILING TYPES FROM LANDSCAPE ENGINEER'S DOCUMENTS AND PROVIDE AND INSTALL ALL REQUIRED FIXTURE MOUNTING HARDWARE. PROVIDE AND INSTALL U.L. LISTED FIRE STOP ENCLOSURES FOR ALL RECESSED FIXTURES IN FIRE RATED CEILINGS.
14. THE CONTRACTOR SHALL PROVIDE IN EVERY CONDUIT A DRAW STRING FOR USE IN FUTURE CONSTRUCTION.
15. POWER FEEDERS MAY NOT BE SHOWN ON THE DRAWINGS, REFER TO THE SINGLE LINE DIAGRAM FOR CONDUIT AND FEEDER INFORMATION. ALL DRAWINGS ARE DIAGRAMMATIC INDICATING LOCATION OR POSITION OF EQUIPMENT. FIELD VERIFY CONDITIONS PRIOR TO INSTALLATION OF ANY WORK.
16. MANUFACTURER'S RECOMMENDATIONS FOR CONDUCTOR SIZING, CIRCUIT BREAKER OR FUSE PROTECTION OF ELECTRICALLY OPERATED EQUIPMENT MAY DIFFER FROM THOSE INDICATED ON DRAWINGS. CONTRACTOR SHALL CONFIRM RATINGS PRIOR TO ORDERING EQUIPMENT. PROVIDE ELECTRICAL PROTECTION TO EQUIPMENT IN ACCORDANCE TO MANUFACTURER'S SPECIFICATIONS AND PER NATIONAL ELECTRICAL CODE REQUIREMENTS.
17. CONTRACTOR SHALL REVIEW EQUIPMENT REQUIREMENTS OF OTHER TRADES AND PROVIDE POWER CIRCUITS AND CONNECTIONS TO ELECTRICALLY OPERATED EQUIPMENT.
18. EFFECTIVELY BOND ELECTRICAL CABINETS, ENCLOSURES AND CONDUIT RACEWAYS TO CODE APPROVED GROUND AS PART OF THE CONTINUOUS GROUNDING SYSTEM.
19. MEASEURE THE 3-PHASE AND PHASE TO NEUTRAL SERVICE VOLTAGE FOR 208/120V PANELS PRIOR TO ENERGIZING ANY PANELS OR EQUIPMENT. AVOID ENERGIZING 208/120V PANELS PHASE TO NEUTRAL VOLTAGE ABOVE 130 VOLTS. TRANSFORMER TAP SETTING MAY REQUIRE CHANGING.
20. MEASURE THE 1-PHASE AND PHASE TO NEUTRAL SERVICE VOLTAGE FOR 240/120V PANELS PRIOR TO ENERGIZING ANY PANELS OR EQUIPMENT. AVOID ENERGIZING 240/120V PANELS PHASE TO NEUTRAL VOLTAGE ABOVE 130 VOLTS.
21. DO NOT SUBSTITUTE SPECIFIED MATERIAL OR EQUIPMENT WITHOUT FIRST OBTAINING APPROVAL FROM THE OWNER OR HIS REPRESENTATIVE.
22. IDENTIFY ALL ABOVE CEILING JUNCTION BOXES COVERS WITH PANEL AND CIRCUITS IN LEGIBLE PRINT USING BLACK INDELIBLE INK. ABOVE CEILING JUNCTION BOXES SHALL ALSO BE LABELED AT THE REAR INTERIOR BOX WITH AN INDELIBLE BLACK MARKER.
23. LABEL ALL WALL AND/OR WIREMOLD MOUNTED OUTLET DEVICES WITH PANEL CIRCUIT IDENTIFICATION WITH BOLD TYPE-PRINTED LABELING. BLACK LETTERING ON WHITE BACKGROUND PREFERRED.
24. DERATE CONDUCTORS IN RACEWAYS IN ACCORDANCE WITH NEC CODE REQUIREMENTS. PANEL FEEDERS TO WIREMOLDS CAN ENTER AT VARIOUS LOCATIONS TO LIMIT CONDUCTOR CIRCUITS PER WIREMOLD CAPACITIES.

THE CONTRACTOR SHALL BE RESPONSIBLE FOR SITE LOCATING ALL EXISTING UNDERGROUND SYSTEMS IN AREA OF NEW TRENCHING. THE CONTRACTOR SHALL BE RESPONSIBLE FOR REPAIRING ALL DAMAGED SYSTEMS TO OWNERS SATISFACTION. EXTREME CARE SHALL BE MAINTAINED DURING TRENCHING AS EXISTING SYSTEMS ARE KNOWN TO EXIST IN AREA. MODIFICATIONS TO EXISTING SYSTEMS MAY BE REQUIRED TO ACCOMMODATE NEW SYSTEM CONFIGURATION AND SHALL BE MADE BY THE CONTRACTOR WITHOUT EXTRA EXPENSE TO THE OWNER THE DRAWINGS AND SPECIFICATIONS ARE FOR THE ASSISTANCE AND GUIDANCE OF THE CONTRACTOR. EXACT LOCATIONS, DISTANCES AND ELEVATIONS WILL BE GOVERNED BY ACTUAL CONDITIONS. THE CONTRACTOR SHALL EXAMINE THE CONTRACT DOCUMENTS AND FIELD CONDITIONS TO DETERMINE EXACT ROUTING AND FINAL TERMINATIONS FOR ALL NEW WORK.

ABBREVIATIONS

A	AMPERE
ABV	ABOVE
AF	AMP FRAME OR AMP FUSE
AFF	ABOVE FINISHED FLOOR
ARCH	ARCHITECTURAL
AS	AMP SWITCH
AT	AMP TRIP
ATS	AUTOMATIC TRANSFER SWITCH
BKR	BREAKER
BLDG	BUILDING
C	CONDUIT
CATV	CABLE TELEVISION
CB	CIRCUIT BREAKER
CD	CANDELAS
CKT	CIRCUIT
CL	CENTER LINE
CLG	CEILING
CO	CONDUIT ONLY
CTR	CENTER
(D)	DEMOLISH
DET	DETAIL
DIM	DIMENSION
DISTR	DISTRIBUTION
DWG	DRAWING
(E)	EXISTING
EM	EMERGENCY
EQPT	EQUIPMENT
FA	FIRE ALARM
FACP	FIRE ALARM CONTROL PANEL
(F)	FUTURE
FIN	FINISH
FL	FLOOR
G , GND	GROUND
HGT	HEIGHT
HP	HORSEPOWER
IC	INTERCOM
IDF	INTERMEDIATE DISTRIBUTION FRAME
JB	JUNCTION BOX
KAIC	KILOAMPERE INTERRUPTING CAPACITY
KV	KILOVOLT
KVA	KILOVOLT AMPERES
KW	KILOWATT
LTG	LIGHTING
MCM	THOUSAND CIRCULAR MILS
MDF	MAIN DISTRIBUTION FRAME
MECH	MECHANICAL
MH	MANHOLE
MTD	MOUNTED
MTG	MOUNTING
(N)	NEW
NC	NORMALLY CLOSED
NIC	NOT IN CONTRACT
NIEC	NOT IN ELECTRICAL CONTRACT
NO	NUMBER/ NORMALLY OPEN
NTS	NOT TO SCALE
O.C.	ON CENTER
P	POLE CIRCUIT BREAKER
PA	PUBLIC ADDRESS
PB	PULL BOX
PF	POWER FACTOR
PH	PHASE
PNL	PANEL
(R)	EXISTING TO BE RELOCATED
REQD	REQUIRED
REQT	REQUIREMENT(S)
RM	ROOM
RSC	RIGID STEEL CONDUIT
SHT	SHEET
SW	SWITCH
SWBD	SWITCHBOARD
TC	TERMINAL CABINET
TEL	TELEPHONE
TYP	TYPICAL
UON	UNLESS OTHERWISE NOTED
V	VOLT
W	WATT
WP	WEATHERPROOF
XFMR	TRANSFORMER

SHEET NO.	ELECTRICAL SHEET TITLE
E0.1	COVER SHEET
E0.2	TITLE 24 EXTERIOR LIGHTING - PART 1
E0.3	TITLE 24 EXTERIOR LIGHTING - PART 2
E1.1	ELECTRICAL LIGHTING SITE PLAN
E1.2	WIRELESS ACCESS POINT & SECURITY CAMERA SITE PLAN
E2.1	SINGLE LINE DIAGRAM
E2.2	DATA AND SECURITY CAMERA RISER DIAGRAM
E4.1	ELECTRICAL DETAILS

FIXTURE SCHEDULE

TYPE	LAMPS	LED DRIVER	MOUNTING	DESCRIPTION	WEIGHT
A	105LA LED	AUTOMATIC DIMMING, DRIVER BY MANUFACTURER	MOUNTED ON A 20' POLE WITH FLUSHED POLE BASE	POLE MOUNTED SINGLE/DOUBLE HEAD LUMINAIRE. FIXTURE HOUSING SHALL BE ONE PIECE DIE CAST ALUMINUM. FIXTURE EPA SHALL BE A MAXIMUM OF .35 FT^2. LENSED LED ARRAYS ARE SET TO ACHIEVE TYPE II DISTRIBUTION AND OPTICAL SYSTEMS ARE FIELD ROTATABLE UTILIZING HIGH PERFORMANCE CLASS I LED SYSTEMS. LUMINAIRE SHALL BE EQUIPPED WITH AN LED 0-10V DIMMING DRIVER THAT ACCEPTS 120V THROUGH 277V 60HZ INPUT. DRIVER OUTPUT SHALL BE BASED ON LED WATTAGE SELECTED. FINISH SHALL BE FADE AND ABRASION RESISTANT, ELECTROSTATICALLY APPLIED, THERMALLY CURED TGIC POLYESTER POWDERCOAT FINISH IN BRONZE COLOR. FIXTURE SHALL BE UL LISTED FOR WET LOCATION. POLES SHALL BE 20' HIGH, 4" STRAIGHT SQUARE STEEL. THE POLE SHAFT SHALL BE A SINGLE PIECE 11 GAUGE CARBON STEEL. THE FORMED STEEL PLATE SHALL BE LONGITUDINALLY WELDED PROVIDING MINIMUM YIELD STRENGTH OF 46KSI. THE ANCHOR BASE SHALL BE A-36 STRUCTURAL CARBON STEEL WITH A MINIMUM YEILD STRENGTH OF 36KSI. THE BASE PLATE SHALL TELESCOPE INTO THE POLE SHAFT AND BE CIRCUMFERENTIALLY WELDED ON THE TOP AND BOTTOM. ANCHOR BOLTS SHALL BE PROVIDED WITH THE POLE. ANCHOR BOLTS SHALL MEET OR EXCEED YIELD STRENGTH OF 50,000PSI. EACH ANCHOR BOLT SHALL BE PROVIDED WITH ALL HARDWARE NECESSARY FOR POLE INSTALLATION. BASE COVER SHALL BE TWO PIECE AND CONCEAL THE ENTIRE BASE PLATE AND ANCHORAGE. POLE SHALL BE PROVIDED WITH A HANDHOLE 12" ABOVE THE BASE. HANDHOLE SHALL BE PROVIDED WITH A COVER PLATE AND ATTACHMENT SCREWS. POLE SHALL ALSO BE PROVIDED WITH A POLE TOP CAP. FINISH SHALL BE TGIC POLYESTER POWDER COAT ELECTROSTATICALLY APPLIED AND THERMALLY CURED AND SHALL BE BLACK IN COLOR. POLES SHALL BE FACTORY DRILLED FOR PROPER FIXTURE INSTALLATION. ALL POLES SHALL BE PROPERLY LEVELED AND VERTICAL. LIGHTING FIXTURE HEADS SHALL BE MOUNTED TO THE POLE PER THE MANUFACTURERS RECOMMENDATIONS. GARDCO - PUREFORM #P21-APD-MR1-A3-1-2-105LA-CW-UNV-BRD-PCB-SPA3 OR APPROVED EQUAL 120V POLE - KW SSP-20-4-11-TBD-DM10-BC OR APPROVED EQUAL.	40 LBS

American Consulting Engineers Electrical, Inc.
1590 The Alameda Suite 200 San Jose, CA 95126 408/236-2312 Fax: 408/236-2316
JOB #E16140.00

REGISTERED PROFESSIONAL ENGINEER SAMMY S. FERNANDEZ E16890 Exp. 06/30/17 ELECTRICAL STATE OF CALIFORNIA

NO.	DESCRIPTION	DATE	BY

Revisions

WORK ACCEPTED: INSPECTOR: BY: DATE:

DRAWN: MG	DESIGN: KC	HOR:	
CHECKED: SF		VERT:	
APPROVED: K. Bjarke	DATE: 12/15/16	JOB NUMBER: 135013	

KARL D. BJARKE– CITY ENGINEER RCE 39416 EXP. 12/31/2017

CITY OF MORGAN HILL
City of Morgan Hill
Public Works Department
17575 Peak Ave. Morgan Hill, CA 95037 (408)778-6480, Fax (408)779-7236

DEL MONTE AVE AND WEST 3RD STREET, MORGAN HILL, CA 95037

GENERAL NOTES, SYMBOL LIST, ABBREVIATIONS AND FIXTURE SCHEDULE

HILLTOP PARK

FILE NUMBER: 1520400
PRINT DATE: 12/07/16
SHEET NUMBER: E0.1

BID DRAWINGS

STATE OF CALIFORNIA
OUTDOOR LIGHTING
CEC-NRCC-LTO-01-E (Revised 06/14) CALIFORNIA ENERGY COMMISSION

CERTIFICATE OF COMPLIANCE	NRCC-LTO-01-E
Outdoor Lighting	(Page 1 of 4)
Project Name: Morgan Hill Downtown - Hilltop Park	Date Prepared: 8/25/2016

Project Address: Del Monte Ave & West 3rd St Morgan Hill, CA 95037	Total Illuminated Hardscape Area 7,125

General Information

Phase of Construction: ☑ New Construction ☐ Addition ☐ Alteration

Outdoor Lighting Zone (OLZ) ☐ OLZ-1 ☐ OLZ-2 ☑ OLZ-3 ☐ OLZ-4

I have confirmed with the AHJ which OLZ applies to this site. For default lighting zone designations, see Title 24 Part 6, §10-114

LIGHTING COMPLIANCE DOCUMENTS (check box for each document included)

For detailed instructions on the use of this and all Energy Efficiency Standards compliance documents, refer to the Nonresidential Manual published by the California Energy Commission.

☑	NRCC-LTO-01-E	Certificate of Compliance
☑	NRCC-LTO-02-E	Outdoor Lighting Controls Certificate of Compliance
☑	NRCC-LTO-03-E	Outdoor Lighting Power Allowance Certificate of Compliance

Summary of Allowed Outdoor Lighting Power		Watts
1.	**Sum Total ALLOWED** Outdoor Lighting Wattage from NRCC-LTO-03-E, page 1 =	2,108
	Complies ONLY if **Installed ≤ Allowed**	↕
2.	**Sum Total INSTALLED** Outdoor lighting Wattage from NRCC-LTO-01-E, page 3	515

Declaration of Required Installation Certificates – Declare by checking all Installation Certificates that will be submitted. (Retain copies and verify forms are completed and signed.)

☑ NRCI-LTO-01-E - Must be submitted for all buildings ☐ Field Inspector

☑ NRCI-LTO-02-E - Must be submitted for a lighting control system, or for an Energy Management Control System (EMCS), to be recognized for compliance. ☐ Field Inspector

Declaration of Required Certificates of Acceptance – Declare by checking all of the Certificates of Acceptance that will be submitted. (Retain copies and verify forms are completed and signed.)

☑ NRCA-LTO-02-A - Must be submitted for outdoor lighting controls. ☐ Field Inspector

STATE OF CALIFORNIA
OUTDOOR LIGHTING
CEC-NRCC-LTO-01-E (Revised 06/15) CALIFORNIA ENERGY COMMISSION

CERTIFICATE OF COMPLIANCE	NRCC-LTO-01-E
Outdoor Lighting	(Page 2 of 4)
Project Name: Morgan Hill Downtown - Hilltop Park	Date Prepared: 8/25/2016

Schedule of luminaires exempt from the outdoor lighting power requirements in §140.7

Name or Symbol	Description of exempt luminaire in accordance with the exemptions

Schedule of luminaires exempt from the cutoff requirements in §130.2(b)

Name or Symbol	Description of exempt luminaire in accordance with the exemptions

Schedule of luminaires exempt from the outdoor lighting control requirements in §130.2(c)

Name or Symbol	Description of exempt luminaire in accordance with the exemptions

STATE OF CALIFORNIA
OUTDOOR LIGHTING
CEC-NRCC-LTO-01-E (Revised 06/14) CALIFORNIA ENERGY COMMISSION

CERTIFICATE OF COMPLIANCE	NRCC-LTO-01-E
Outdoor Lighting	(Page 3 of 4)
Project Name: Morgan Hill Downtown - Hilltop Park	Date Prepared: 8/25/2016

A. OUTDOOR LIGHTING SCHEDULE and FIELD INSPECTION ENERGY CHECKLIST

Luminaire Schedule		Installed Watts					Location	Cutoff	Field inspector	
A	B	C	D		E	F	G	H	I	
Name or Item Tag	Complete Luminaire Description	Watts per Luminaire	How wattage was determined: CEC default from NMS	According to §130.0(a)	Number of Luminaires	Total Installed Watts in this area (C x E)	Primary Function area in which these luminaires are installed	BUG Rating	Pass	Fail
A	Pole Mounted Luminaire 20' high	103.0	☑	☐	5	515	Pedestrian Hardscape		☐	☐
			☐	☐					☐	☐
			☐	☐					☐	☐
			☐	☐					☐	☐
			☐	☐					☐	☐
			☐	☐					☐	☐
			☐	☐					☐	☐
			☐	☐					☐	☐
			☐	☐					☐	☐
			☐	☐					☐	☐
			☐	☐					☐	☐
			☐	☐					☐	☐
			☐	☐					☐	☐
			☐	☐					☐	☐
			☐	☐					☐	☐
			☐	☐					☐	☐
			☐	☐					☐	☐
			☐	☐					☐	☐
			☐	☐					☐	☐
			☐	☐					☐	☐
			☐	☐					☐	☐
			☐	☐					☐	☐
			☐	☐					☐	☐
			☐	☐					☐	☐
			☐	☐					☐	☐
			☐	☐					☐	☐
			☐	☐					☐	☐
			☐	☐					☐	☐
		INSTALLED WATTS PAGE TOTAL:				515	Enter sum total of all pages (**Sum Total INSTALLED** Outdoor lighting wattage) into NRCC-LTO-01-E; Page 1		515	

STATE OF CALIFORNIA
OUTDOOR LIGHTING
CEC-NRCC-LTO-01-E (Revised 06/14) CALIFORNIA ENERGY COMMISSION

CERTIFICATE OF COMPLIANCE	NRCC-LTO-01-E
Outdoor Lighting	(Page 4 of 4)
Project Name: Morgan Hill Downtown - Hilltop Park	Date Prepared: 8/25/2016

DOCUMENTATION AUTHOR'S DECLARATION STATEMENT

1. I certify that this Certificate of Compliance documentation is accurate and complete.

Documentation Author Name:	Documentation Author Signature:
Company: American Consulting Engr. Elec., Inc	Signature Date: 8/25/2016
Address:	CEA Certification Identification (if applicable):
City/State/Zip:	Phone:

RESPONSIBLE PERSON'S DECLARATION STATEMENT

I certify the following under penalty of perjury, under the laws of the State of California:

1. The information provided on this Certificate of Compliance is true and correct.
2. I am eligible under Division 3 of the Business and Professions Code to accept responsibility for the building design or system design identified on this Certificate of Compliance (responsible designer).
3. The energy features and performance specifications, materials, components, and manufactured devices for the building design or system design identified on this Certificate of Compliance conform to the requirements of Title 24, Part 1 and Part 6 of the California Code of Regulations.
4. The building design features or system design features identified on this Certificate of Compliance are consistent with the information provided on other applicable compliance documents, worksheets, calculations, plans and specifications submitted to the enforcement agency for approval with this building permit application.
5. I will ensure that a completed signed copy of this Certificate of Compliance shall be made available with the building permit(s) issued for the building, and made available to the enforcement agency for all applicable inspections. I understand that a completed signed copy of this Certificate of Compliance is required to be included with the documentation the builder provides to the building owner at occupancy.

Responsible Designer Name: Sammy S. Fernandez	Responsible Designer Signature:
Company: American Consulting Engineers Electrical,	Date Signed:
Address: 1590 The Alameda Suite 200	License: E16890
City/State/Zip: San Jose, CA 95126	Phone: 408-236-2312

STATE OF CALIFORNIA
OUTDOOR LIGHTING CONTROLS
CEC-NRCC-LTO-02-E (Revised 05/15) CALIFORNIA ENERGY COMMISSION

CERTIFICATE OF COMPLIANCE	NRCC-LTO-02-E
Outdoor Lighting Controls	(Page 1 of 3)
Project Name: Morgan Hill Downtown - Hilltop Park	Date Prepared: 8/25/2016

The NRCC-LTO-02-E shall be used to document all mandatory outdoor lighting controls that are applicable to the project.

Mandatory Outdoor Lighting Control Declaration Statements

Check all that apply:

- ☐ Lighting shall be controlled by self-contained lighting control devices which are certified to the Energy Commission according to the Title 20 Appliance Efficiency Regulations in accordance with §110.9(a).
- ☐ Lighting shall be controlled by a lighting control system or energy management control system in accordance with §110.9. An Installation Certificate shall be submitted in accordance with §130.4(b).
- ☑ All lighting controls and equipment shall comply with the applicable requirements in §110.9 and shall be installed in accordance with the manufacturer's instructions in accordance with §130.1
- ☐ Part-Night Outdoor Lighting Controls, as defined in Section 100.1(b), shall meet the requirements in Section 110.9(b)5
- ☐ All outdoor incandescent luminaires rated over 100 watts, determined in accordance with Section 130.0(c), shall be controlled by a motion sensor.
- ☐ All outdoor luminaires rated for use with lamps greater than 150 lamp watts, determined in accordance with Section 130.0(c), shall comply with Backlight, Uplight, and Glare (collectively referred to as "BUG") in accordance with Section 130.2(b)
- ☐ All installed outdoor lighting shall be controlled by a photocontrol or outdoor astronomical time-switch control in accordance with Section 130.2(c)1
- ☑ All installed outdoor lighting shall be circuited and independently controlled from other electrical loads by an automatic scheduling control in accordance with Section 130.2(c)2
- ☐ All installed outdoor lighting, where the bottom of the luminaire is mounted 24 feet or less above the ground, shall be controlled with automatic lighting controls in accordance with Section 130.2(c)3
- ☐ For Outdoor Sales Frontage, Outdoor Sales Lots, and Outdoor Sales Canopies lighting, an automatic lighting control in accordance with Section 130.2(c)4
- ☐ For Building Facade, Ornamental Hardscape and Outdoor Dining lighting, an automatic lighting control in accordance with Section 130.2(c)5
- ☑ Before an occupancy permit is granted for a newly constructed building or area, or a new lighting system serving a building, area, or site is operated for normal use, indoor lighting controls serving the building, area, or site shall be certified as meeting the Acceptance Requirements for Code Compliance in accordance with §130.4.(a). Outdoor lighting controls shall comply with the applicable requirements of Section 130.2(c) and Reference Nonresidential Appendix NA7.8

STATE OF CALIFORNIA
OUTDOOR LIGHTING CONTROLS
CEC-NRCC-LTO-02-E (Revised 05/15) CALIFORNIA ENERGY COMMISSION

CERTIFICATE OF COMPLIANCE	NRCC-LTO-02-E
Outdoor Lighting Controls	(Page 2 of 3)
Project Name: Morgan Hill Downtown - Hilltop Park	Date Prepared: 8/25/2016

MANDATORY OUTDOOR LIGHTING CONTROL SCHEDULE and FIELD INSPECTION CHECKLIST

Outdoor Lighting Control Schedule			Standards Complying With (✓ all that apply, or enter 'E' if Exempted)						✓ if Acceptance Test Required	Field Inspector	
A	B	C	D	E	F	G	H	I	N	O	
Location and Application of Luminaires being controlled	Type/ Description of Lighting Control (i.e. motion sensor, photocontrol, outdoor astronomical time-switch control, centralized time-based zone lighting control)	# of Units	§130.2(a)	§130.2(c)1	§130.2(c)2	§130.2(c)3	§130.2(c)4	§130.2(c)5		Pass	Fail
HILLTOP PARK OUTDOOR	(23) OCCUPANCY SENSOR	5		✓						☐	☐
HILLTOP PARK OUTDOOR	(20) PHOTOCELL	5			✓					☐	☐
										☐	☐
										☐	☐
										☐	☐
										☐	☐
										☐	☐
										☐	☐
										☐	☐
										☐	☐
										☐	☐
										☐	☐
										☐	☐
										☐	☐
										☐	☐
										☐	☐
										☐	☐
										☐	☐
										☐	☐

American Consulting Engineers Electrical, Inc.
1590 The Alameda Suite 200
San Jose, CA 95126
408/236-2312
Fax: 408/236-2316
JOB #E16140.00

LICENSED PROFESSIONAL ENGINEER SAMMY S. FERNANDEZ E16890 Exp. 06/30/17 ELECTRICAL STATE OF CALIFORNIA

NO.	DESCRIPTION	DATE	BY

Revisions

WORK ACCEPTED: INSPECTOR: BY: DATE:

DRAWN: MG DESIGN: KC HOR:
CHECKED: SF VERT:
APPROVED: K Barr DATE: 12/15/16 JOB NUMBER: 135013
KARL D. BARRE - CITY ENGINEER RCE 39415 EXP. 12/31/2017

City of Morgan Hill
Public Works Department
CITY OF MORGAN HILL
17575 Peak Ave. Morgan Hill, CA 95037 (408)778-6480, Fax (408)779-7236

DEL MONTE AVE AND WEST 3RD STREET, MORGAN HILL, CA 95037

TITLE 24
EXTERIOR LIGHTING - PART 1
HILLTOP PARK

FILE NUMBER: 1520400
PRINT DATE: 12/07/16
SHEET NUMBER: E0.2

BID DRAWINGS

STATE OF CALIFORNIA
OUTDOOR LIGHTING CONTROLS
CEC-NRCC-LTO-02-E (Revised 05/15) CALIFORNIA ENERGY COMMISSION

CERTIFICATE OF COMPLIANCE	NRCC-LTO-02-E
Outdoor Lighting Controls	(Page 3 of 3)
Project Name: Morgan Hill Downtown - Hilltop Park	Date Prepared: 8/25/2016

DOCUMENTATION AUTHOR'S DECLARATION STATEMENT	
1. I certify that this Certificate of Compliance documentation is accurate and complete.	
Documentation Author Name:	Documentation Author Signature:
Company: American Consulting Engr. Elec., Inc	Signature Date: 8/25/2016
Address:	CEA Certification Identification (if applicable):
City/State/Zip: ,	Phone:

RESPONSIBLE PERSON'S DECLARATION STATEMENT

I certify the following under penalty of perjury, under the laws of the State of California:

1. The information provided on this Certificate of Compliance is true and correct.
2. I am eligible under Division 3 of the Business and Professions Code to accept responsibility for the building design or system design identified on this Certificate of Compliance (responsible designer).
3. The energy features and performance specifications, materials, components, and manufactured devices for the building design or system design identified on this Certificate of Compliance conform to the requirements of Title 24, Part 1 and Part 6 of the California Code of Regulations.
4. The building design features or system design features identified on this Certificate of Compliance are consistent with the information provided on other applicable compliance documents, worksheets, calculations, plans and specifications submitted to the enforcement agency for approval with this building permit application.
5. I will ensure that a completed signed copy of this Certificate of Compliance shall be made available with the building permit(s) issued for the building, and made available to the enforcement agency for all applicable inspections. I understand that a completed signed copy of this Certificate of Compliance is required to be included with the documentation the builder provides to the building owner at occupancy.

Responsible Designer Name: Sammy S. Fernandez	Responsible Designer Signature:
Company: American Consulting Engineers Electrica	Date Signed:
Address: 1590 The Alameda Suite 200	License: E16890
City/State/Zip: San Jose, CA 95126	Phone: 408-236-2312

STATE OF CALIFORNIA
OUTDOOR LIGHTING POWER ALLOWANCES
CEC-NRCC-LTO-03-E (Revised 05/15) CALIFORNIA ENERGY COMMISSION

CERTIFICATE OF COMPLIANCE	NRCC-LTO-03-E
Outdoor Lighting Power Allowances	(Page 1 of 4)
Project Name: Morgan Hill Downtown - Hilltop Park	Date Prepared: 8/25/2016

A. OUTDOOR LIGHTING POWER ALLOWANCE SUMMARY

1. General Hardscape Lighting Power Allowance (Site Total from Section B of NRCC-LTO-03-E)	1.	2,108
2. Additional Specific "use it or lose it" Lighting Power Allowances listed in each of these cells shall be identical to total allowed watts determined in Section C-1 to C-4 of NRCC-LTO-03-E.		
PER APPLICATION from Section C-1: 0 + PER UNIT LENGTH (SALES FRONTAGE) from Section C-2: 0 + PER HARDSCAPE AREA (ORNAMENTAL LIGHTING) from Section C-3: 0 + PER SPECIFIC AREA from Section C-4: 0 =	2.	0
3. Sum Total ALLOWED Outdoor Lighting Wattage (add rows 1 and 2)	3.	2,108

B. GENERAL HARDSCAPE LIGHTING POWER ALLOWANCE FROM TABLE 140.7-A

Area Wattage Allowance (AWA)				Linear Wattage Allowance (LWA)			Initial Wattage Allowance (IWA)	Total General Hardscape Lighting Allowance
A	B	C	D	E	F	G	H	I
Name of area	Illuminated Hardscape Area	AWA Per Square Foot	AWA (B x C)	Perimeter Length of General Hardscape	LPA per Linear Foot	LWA (E x F)	IWA (Watts)	D + G + H
Pathway LTG	7,125	0.090	641	1,161	0.600	697	770	2,108
							TOTAL	2,108

STATE OF CALIFORNIA
OUTDOOR LIGHTING POWER ALLOWANCES
CEC-NRCC-LTO-03-E (Revised 05/15) CALIFORNIA ENERGY COMMISSION

CERTIFICATE OF COMPLIANCE	NRCC-LTO-03-E
Outdoor Lighting Power Allowances	(Page 2 of 4)
Project Name: Morgan Hill Downtown - Hilltop Park	Date Prepared: 8/25/2016

C. ADDITIONAL "USE IT OR LOSE IT" OUTDOOR LIGHTING POWER ALLOWANCES FOR SPECIFIC APPLICATIONS

☐ The additional specific outdoor lighting power allowance shall be the smaller of the allowed lighting power or the actual lighting power used.

☐ Use Outdoor Lighting Zone (OLZ) that is documented on page 1 of NRCC-LTO-01-E to calculate the specific wattage allowances.

C-1. WATTAGE ALLOWANCE PER APPLICATION – Table 140.7-B

☐ Available only for qualifying locations, which include Building Entrances or Exits; Primary Entrances to Senior Care Facilities, Police Stations, Hospitals, Fire Stations, and Emergency Vehicle Facilities; Drive Up Windows; Vehicle Service Station Uncovered Fuel Dispenser

☐ If more than one luminaire type is used per location, use multiple rows for that location

A	B	C	D	E	F	G	H	I	J
	ALLOTTED WATTS			DESIGN WATTS					
Name of Location for which allowance is claimed	Number of qualifying locations	Wattage Allowance per qualifying location	Allotted Watts (B x C)	Luminaire Code or Symbol	Luminaire Description	Luminaire Quantity	Watts per luminaire	Design Watts (G x H)	Allowed Watts (smaller of D or I)
								Sum total allowance per application on this site:	0

C-2. WATTAGE ALLOWANCE PER UNIT LENGTH (Sales Frontage) from Table 140.7-B

☐ If more than one luminaire type is used per location, use multiple rows for that location

A	B	C	D	E	F	G	H	I	J
	ALLOTTED WATTS			DESIGN WATTS					
Name of Location for which allowance is claimed	Linear feet of Sales Frontage	Wattage Allowance per linear foot	Allotted Watts (B x C)	Luminaire Code or Symbol	Luminaire Description	Luminaire Quantity	Watts per luminaire	Design Watts (G x H)	Allowed Watts (smaller of D or I)
								Sum total allowance for sales frontage on the site:	0

STATE OF CALIFORNIA
OUTDOOR LIGHTING POWER ALLOWANCES
CEC-NRCC-LTO-03-E (Revised 05/15) CALIFORNIA ENERGY COMMISSION

CERTIFICATE OF COMPLIANCE	NRCC-LTO-03-E
Outdoor Lighting Power Allowances	(Page 3 of 4)
Project Name: Morgan Hill Downtown - Hilltop Park	Date Prepared: 8/25/2016

C-3. WATTAGE ALLOWANCE PER SQUARE FOOT OF HARDSCAPE AREA (Ornamental Lighting) – Table 140.7-B

☐ Allowance for the total site illuminated hardscape area. Luminaires qualifying for this allowance shall be rated for 100 watts or less as determined in accordance with Section 130.0(c), and shall be post-top luminaires, lanterns, pendant luminaires, or chandeliers.

☐ If more than one luminaire type is used per location, use multiple rows for that location

A	B	C	D	E	F	G	H	I	J
	ALLOTTED WATTS			DESIGN WATTS					
Name of area for which ornamental allowance is claimed	Square feet of Hardscape	Wattage Allowance per square foot	Allotted Watts (B x C)	Luminaire Code or Symbol	Luminaire Description	Luminaire Quantity	Watts per luminaire	Design Watts (G x H)	Allowed Watts (smaller of D or I)
								Sum total allowance for ornamental lighting on the site:	0

C-4. WATTAGE ALLOWANCE PER SQUARE FOOT OF SPECIFIC AREA - Table 140.7-B

☐ Allowances for Building Facades; Outdoor Sales Lots; Vehicle Service Station Hardscape; Vehicle Service Station Canopies; Sales Canopies; Non-sales Canopies; Guard Stations; Student Pick-up/Drop-off zone; Outdoor Dining; Special Security Lighting for Retail Parking and Pedestrian Hardscape.

☐ If more than one luminaire type is used per location, use multiple rows for that location

A	B	C	D	E	F	G	H	I	J
	ALLOTTED WATTS			DESIGN WATTS					
Name of Location for which allowance is claimed	Illuminated Area of Application	Wattage Allowance per square foot	Allotted Watts (B x C)	Luminaire Code or Symbol	Luminaire Description	Luminaire Quantity	Watts per luminaire	Design Watts (G x H)	Allowed Watts (smaller of D or I)
								Sum total allowance for specific area on the site:	0

STATE OF CALIFORNIA
OUTDOOR LIGHTING POWER ALLOWANCES
CEC-NRCC-LTO-03-E (Revised 05/15) CALIFORNIA ENERGY COMMISSION

CERTIFICATE OF COMPLIANCE	NRCC-LTO-03-E
Outdoor Lighting Power Allowances	(Page 4 of 4)
Project Name: Morgan Hill Downtown - Hilltop Park	Date Prepared: 8/25/2016

DOCUMENTATION AUTHOR'S DECLARATION STATEMENT	
1. I certify that this Certificate of Compliance documentation is accurate and complete.	
Documentation Author Name:	Documentation Author Signature:
Company: American Consulting Engr. Elec., Inc	Signature Date: 8/25/2016
Address:	CEA Certification Identification (if applicable):
City/State/Zip: ,	Phone:

RESPONSIBLE PERSON'S DECLARATION STATEMENT

I certify the following under penalty of perjury, under the laws of the State of California:

1. The information provided on this Certificate of Compliance is true and correct.
2. I am eligible under Division 3 of the Business and Professions Code to accept responsibility for the building design or system design identified on this Certificate of Compliance (responsible designer).
3. The energy features and performance specifications, materials, components, and manufactured devices for the building design or system design identified on this Certificate of Compliance conform to the requirements of Title 24, Part 1 and Part 6 of the California Code of Regulations.
4. The building design features or system design features identified on this Certificate of Compliance are consistent with the information provided on other applicable compliance documents, worksheets, calculations, plans and specifications submitted to the enforcement agency for approval with this building permit application.
5. I will ensure that a completed signed copy of this Certificate of Compliance shall be made available with the building permit(s) issued for the building, and made available to the enforcement agency for all applicable inspections. I understand that a completed signed copy of this Certificate of Compliance is required to be included with the documentation the builder provides to the building owner at occupancy.

Responsible Designer Name: Sammy S. Fernandez	Responsible Designer Signature:
Company: American Consulting Engineers Electrical, Inc.	Date Signed:
Address: 1590 The Alameda Suite 200	License: E16890
City/State/Zip: San Jose, CA 95126	Phone: 408-236-2312

American Consulting Engineers Electrical, Inc.
1590 The Alameda Suite 200
San Jose, CA 95126
JOB #E16140.00
408/236-2312
Fax: 408/236-2316

REGISTERED PROFESSIONAL ENGINEER SAMMY S. FERNANDEZ E16890 Exp. 06/30/17 ELECTRICAL STATE OF CALIFORNIA

NO.	DESCRIPTION	DATE	BY

Revisions

WORK ACCEPTED:	INSPECTOR:
BY:	DATE:
DRAWN: MG	DESIGN: KC
CHECKED: SF	
APPROVED: KARL D. BJARKE– CITY ENGINEER RCE 39416 EXP. 12/31/2017	DATE: 12/15/16
HOR:	
VERT:	
JOB NUMBER: 135013	

City of Morgan Hill
Public Works Department
CITY OF MORGAN HILL
17575 Peak Ave. Morgan Hill, CA 95037 (408)778-6480, Fax (408)779-7236

DEL MONTE AVE AND WEST 3RD STREET, MORGAN HILL, CA 95037

TITLE 24
EXTERIOR LIGHTING - PART 2
HILLTOP PARK

FILE NUMBER: 1520400
PRINT DATE: 12/07/16
SHEET NUMBER: E0.3

BID DRAWINGS

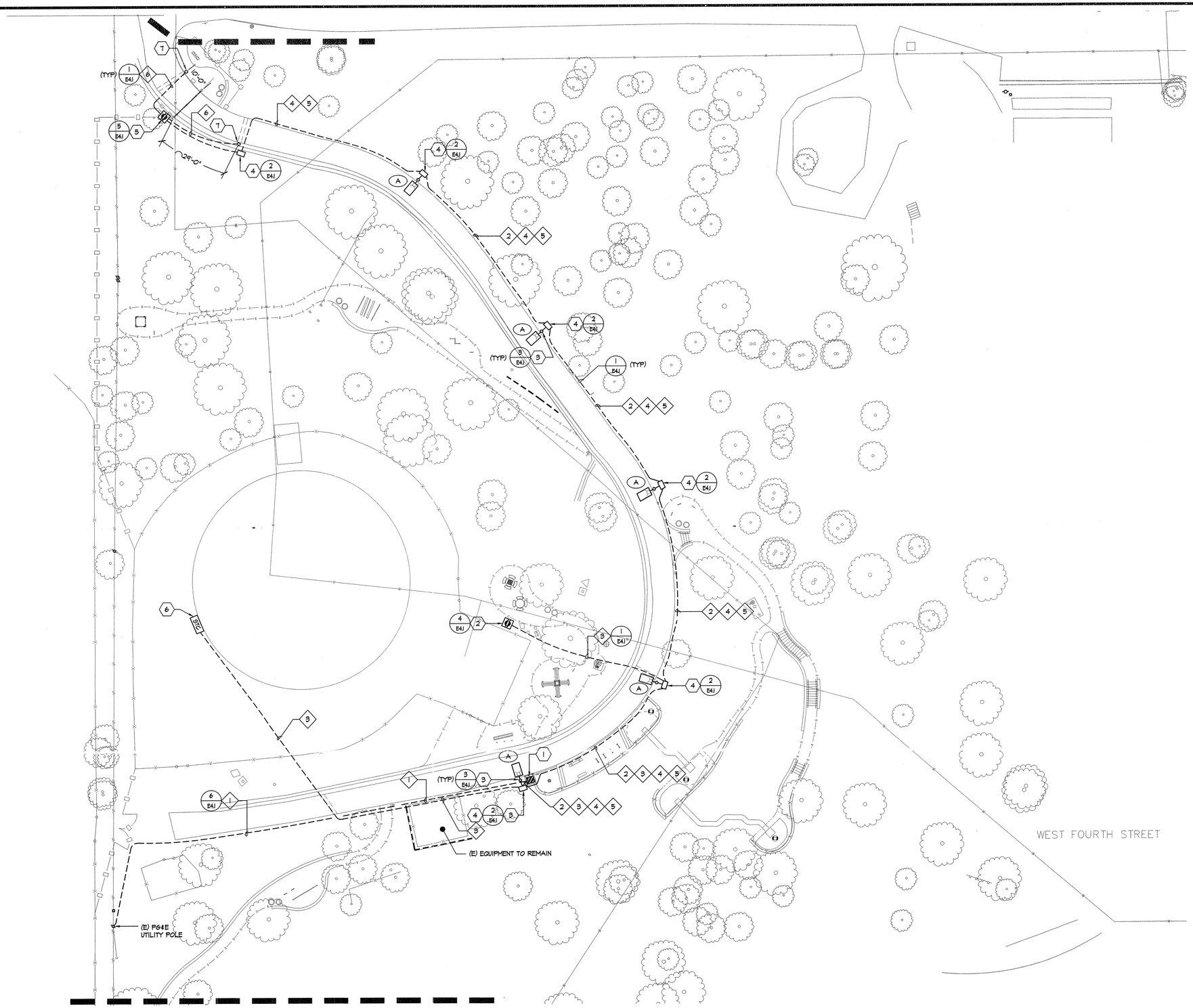

1 ELECTRICAL LIGHTING SITE PLAN

E1.1 SCALE: 1" = 20'-0"

GENERAL NOTES:

1. SEE SINGLE LINE DIAGRAM FOR POWER CABLE REQUIREMENTS. ALL CABLES ARE DESIGNED AND SIZED FOR VOLTAGE DROPS.
2. CONTRACTOR SHALL DIRECT ALL TRENCHING CLEAR AND AWAY FROM EXISTING TREES, AND DO HAND DIGGING WHEN THE TRENCHING IS CLOSE TO THE EXISTING TREES & EXISTING UTILITY.
3. ELECTRICAL CONTRACTOR IS TO COORDINATE AND VERIFY EXISTING UTILITY LOCATION WITH CITY. POT HOLE BEFORE TRENCHING.
4. SEE CIVIL DRAWING FOR EXACT LIGHT FIXTURE LOCATION.
5. PROVIDE TRAFFIC RATED LID FOR ALL PULL BOXES.

SHEET NOTES:

1. NEW PEDESTAL METER PANEL. 100A, 120/208V, 3-PHASE, NEMA-3R.
2. NEW FLOOR-MOUNTED NEMA-3R ENCLOSURE WITH BUILT-IN FAN.
3. NEW SECURITY CAMERA MOUNTED ON LIGHT POLE. SEE E1.2 & RISER DIAGRAM FOR ADDITIONAL REQUIREMENT.
4. NEW POWER PULL BOX. LABEL LID "POWER".
5. (N) LOCKABLE NEMA-3R ENCLOSER FOR REMOTE CONTROL GATE. COORDINATE POWER TERMINATION WITH REMOTE GATE INSTALLER AND CONNECT AS REQUIRED. PROVIDE 1" CONDUIT AND CONNECT TO GATE KEYPAD OPENER AS REQUIRED.
6. PROVIDE NEW SIGNAL TERMINAL CAM WITH QUAD RECEPTACLE INSIDE. SEE SINGLE LINE DIAGRAM FOR CONDUIT & CABLE REQUIREMENT.
7. STUB (N) 1" CONDUIT FOR GATE KEYPAD OPENER, APPROX. 10' FROM GATE. COORDINATE EXACT LOCATION WITH GATE INSTALLER.

CONDUIT SCHEDULE:

1. NEW 3"C - PG&E.
2. NEW 1 1/2"C - LIGHTS.
3. NEW 1 1/2" C - POWER (IDF)
4. NEW 2"C - REMOTE GATE.
5. NEW (2) 2"C - SPARE.
6. NEW 1"C - REROUTE GATE KEYPAD.

American Consulting Engineers
Electrical, Inc.
1590 The Alameda Suite 200
San Jose, CA 95126
JOB #E16140.00
408/236-2312
Fax: 408/236-2316

REGISTERED PROFESSIONAL ENGINEER
ANTHONY S. FERNANDEZ
E16890
Exp. 06/30/17
ELECTRICAL
STATE OF CALIFORNIA

NO.	DESCRIPTION	DATE	BY

Revisions

WORK ACCEPTED: INSPECTOR:
BY: DATE:

DRAWN: MG | DESIGN: KC | HOR:
CHECKED: SF | VERT:
APPROVED: KDGeek | DATE: 12/15/16 | JOB NUMBER: 135013
KARL D. GAERTNER - CITY ENGINEER
RCE 39416 EXP. 12/31/2017

CITY OF MORGAN HILL
City of Morgan Hill
Public Works Department
17575 Peak Ave. Morgan Hill, CA 95037 (408)778-6480, Fax (408)779-7236

DEL MONTE AVE AND
WEST 3RD STREET,
MORGAN HILL,
CA 95037

ELECTRICAL LIGHTING SITE PLAN
HILLTOP PARK

FILE NUMBER: 1520400
PRINT DATE: 12/07/16
SHEET NUMBER: E1.1

BID DRAWINGS

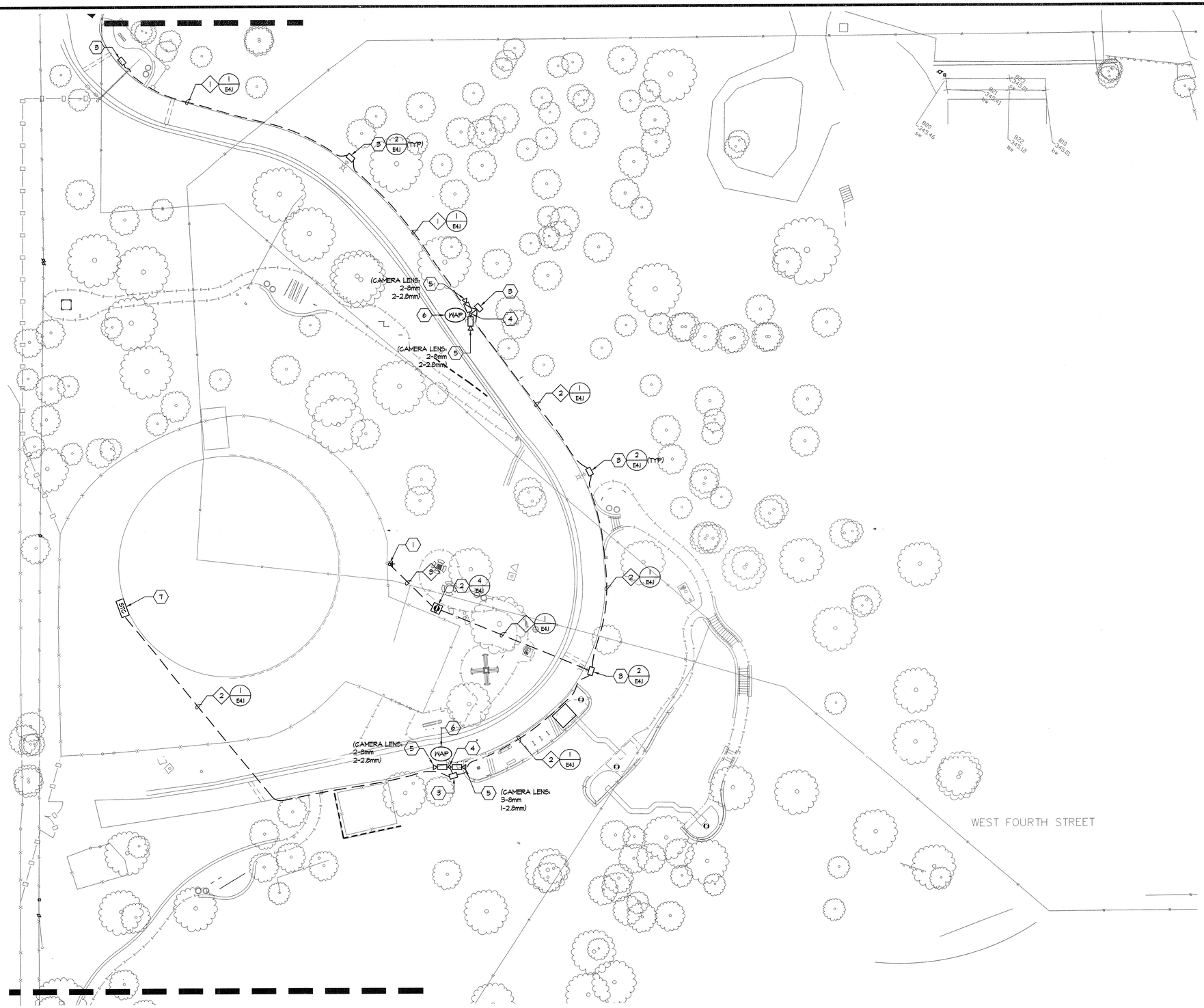

GENERAL NOTES:

1. SEE DATA/ SECURITY CAMERA RISER DIAGRAM FOR ADDITIONAL REQUIREMENT.
2. CONTRACTOR SHALL DIRECT ALL TRENCHING CLEAR AND AWAY FROM EXISTING TREES, AND DO HAND DIGGING WHEN THE TRENCHING IS CLOSE TO THE EXISTING TREES.
3. PROVIDE TRAFFIC RATED LID FOR ALL PULL BOXES.

SHEET NOTES:

1. NEW AIRAYA WIRELESS GRID 300 MOUNTED ON TOP OF 20' SQUARE STRAIGHT STEEL POLE (KN SSP-20-4-11-TBD-DM10-BC). PRIOR TO INSTALL WIRELESS GRID, THE CONTRACTOR TO COORDINATE WITH THE CITY FOR EXACT LOCATION ANTENNA ALIGNING & REQUIREMENT.
2. NEW NEMA 3R ENCLOSURE TO HOUSE DATA & SECURITY EQUIPMENT. SEE DETAIL & DATA/ SECURITY RISER FOR REQUIREMENT.
3. NEW N9 PULL BOX. LABEL AS "SIGNAL". STUB NEW 1" CONDUIT FROM SIGNAL PULL BOX INTO LIGHT POLE SIGNAL COMPARTMENT.
4. 20' HIGH LIGHT POLE. SEE E1.1 FOR INSTALLATION REQUIREMENT.
5. NEW SECURITY CAMERA MOUNTED AT 15' ON LIGHT POLE.
6. NEW WIRELESS ACCESS POINT (WAP) MOUNTED ON TOP OF LIGHT POLE.
7. NEW SIGNAL TERMINAL CABINET. STUB (2) 4" CONDUIT IN STC. COORDINATE WITH THE CITY IT FOR STC SIZE AND EXACT LOCATION.

CONDUIT SCHEDULE:

1. NEW 4" CONDUIT - SIGNAL.
2. NEW (2) 4" CONDUIT - SIGNAL.
3. NEW 2" CONDUIT - SIGNAL.

1 / E1.2 WIRELESS ACCESS POINT & SECURITY CAMERA SITE PLAN

SCALE: 1" = 20'-0"

American Consulting Engineers Electrical, Inc.
1590 The Alameda Suite 200
San Jose, CA 95126
JOB #E16140.00
408/236-2312
Fax: 408/236-2316

REGISTERED PROFESSIONAL ENGINEER — STANLEY S. FEDANOVICH — E-16690 Exp. 06/30/17 — ELECTRICAL — STATE OF CALIFORNIA

NO.	DESCRIPTION	DATE	BY

Revisions

WORK ACCEPTED: INSPECTOR:
BY: DATE:

DRAWN: MG | DESIGN: KC | HOR:
CHECKED: SF | VERT:
APPROVED: KDB | DATE: 12/15/16 | JOB NUMBER: 135013
KARL D. BURKE- CITY ENGINEER
RCE 39416 EXP. 12/31/2017

City of Morgan Hill
Public Works Department
CITY OF MORGAN HILL
17575 Peak Ave. Morgan Hill, CA 95037 (408)778-6480, Fax (408)779-7236

DEL MONTE AVE AND WEST 3RD STREET, MORGAN HILL, CA 95037

WIRELESS ACCESS POINT & SECURITY CAMERA SITE PLAN
HILLTOP PARK

FILE NUMBER: 1520400
PRINT DATE: 12/07/16
SHEET NUMBER: E1.2

BID DRAWINGS

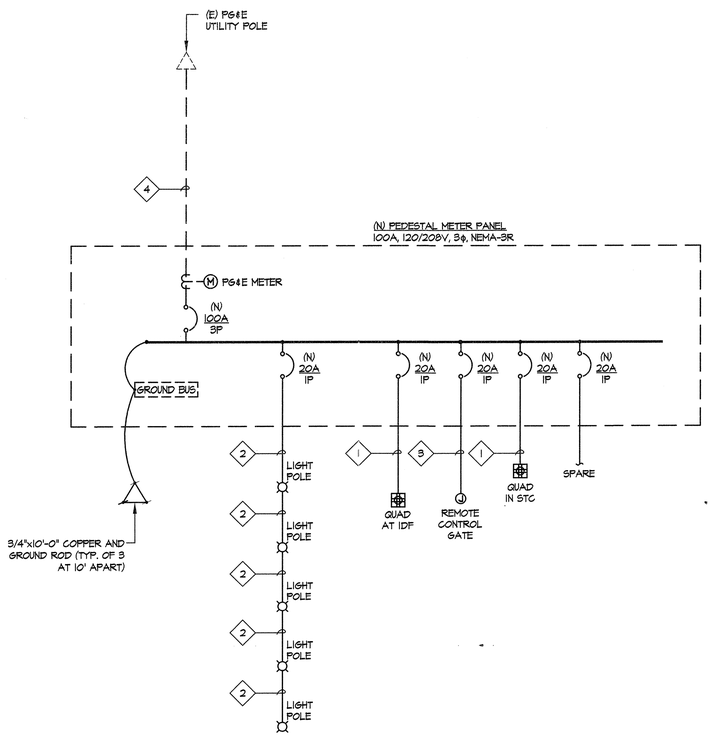

1 / E2.1 **SINGLE LINE DIAGRAM**

SCALE: NOT TO SCALE

GENERAL NOTES:

1. THE CONTRACTOR SHALL SUBMIT (N) PEDESTAL METER PANEL TO PG&E FOR REVIEW. THE CONTRACTOR SHALL OBTAIN A WRITTEN APPROVAL OF THE (N) PEDESTAL METER PANEL PRIOR TO ORDERING OF THE (N) PEDESTAL METER PANEL.
2. PRIOR TO ANY PG&E RELATED WORK, THE CONTRACTOR SHALL OBTAIN THE PG&E SUBSTRUCTURE PACKAGE FIRST. THE CONTRACTOR SHALL INCLUDE IN THEIR BID ALL REQUIREMENTS TO COMPLETE THE PRIMARY AND SECONDARY CABLE CONNECTIONS.

FEEDER SCHEDULE:

1. NEW 1 1/4"C WITH (2) #4 + (1) #8 CU GND - IDF/ IRRIGATION
2. NEW 1 1/4"C WITH (2) #1 + (1) #8 CU GND - LIGHTS
3. NEW (1) 2"C WITH (2) #1/0 + (1) #8 CU GND - REMOTE CONTROL GATE
4. NEW (1) 3"C - PG&E SECONDARY

(N) 100A PEDESTAL METER PANEL, 120/208V, 3 PHASE SYSTEM LOAD CALCULATIONS FOR HILLTOP PARK

DESCRIPTION	LOAD TYPE(KVA)				Demand
		Pwr Load @ 100%	Motor Load @ 100%	Lighting Load @ 100%	(KVA)
POLE LED LIGHTS				1.0	1.0
IRRIGATION CONTROL		1.0			1.0
SECURITY CAMERA		1.0			1.0
REMOTE CONTROL GATE		1.0			1.0
	TOTAL DEMAND KVA				4.0
	TOTAL DEMAND AMPS @ 100% (208V)				11.1
	TOTAL DEMAND AMPS @ 120% (208V)				13.3

American Consulting Engineers
Electrical, Inc.
1590 The Alameda Suite 200
San Jose, CA 95126
JOB #E16140.00
408/236-2312
Fax: 408/236-2318

REGISTERED PROFESSIONAL ENGINEER
MANDY S. FEINGOLD
No. E16890
Exp. 06/30/17
ELECTRICAL
STATE OF CALIFORNIA

NO.	DESCRIPTION	DATE	BY

Revisions

WORK ACCEPTED: INSPECTOR:
BY: DATE:

DRAWN: MG
DESIGN: KC
HOR:
CHECKED: SF
VERT:
APPROVED: K Burke
DATE: 12/15/16
JOB NUMBER: 135013
KARL D. BURKE- CITY ENGINEER
RCE 39416 EXP. 12/31/2017

City of Morgan Hill
Public Works Department
CITY OF MORGAN HILL
17575 Peak Ave. Morgan Hill, CA 95037 (408)778-6480, Fax (408)779-7236

DEL MONTE AVE AND
WEST 3RD STREET,
MORGAN HILL,
CA 95037

SINGLE LINE DIAGRAM

HILLTOP PARK

FILE NUMBER: 1520400
PRINT DATE: 12/07/16
SHEET NUMBER: E2.1

BID DRAWINGS

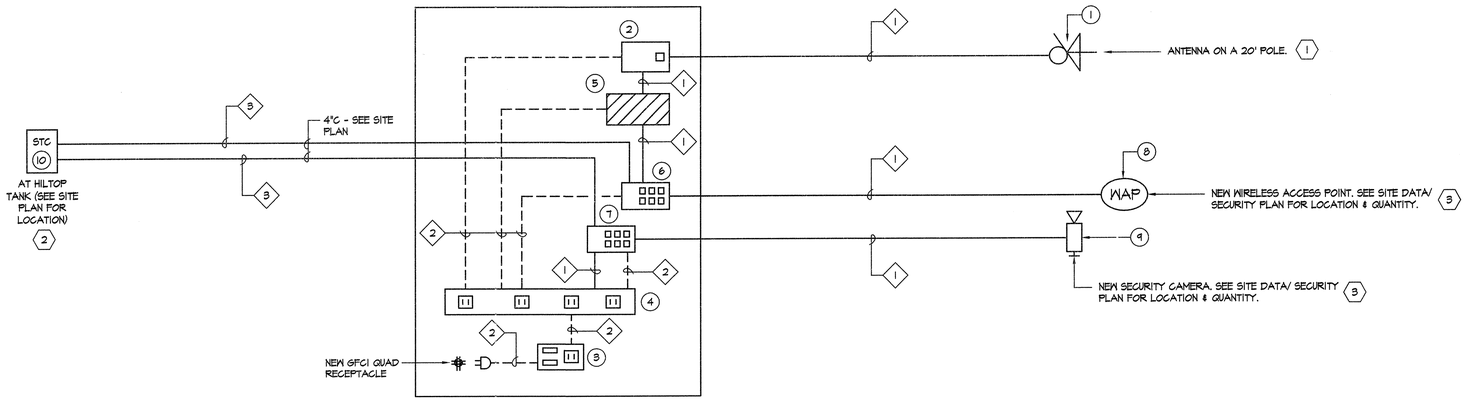

NEW IDF NEMA-3R OUTDOOR ENCLOSURE WITH POWER FAN SEE SITE PLAN FOR LOCATION

1 / E2.2 DATA & SECURITY CAMERA RISER DIAGRAM

N.T.S.

RISER GENERAL NOTES

1. ALL DATA/TELEPHONE CABLES SHALL INSTALL IN CONDUIT AND/OR J-HOOKS FROM EACH PORT, DATA/TELEPHONE LOCATION WHERE SHOWN ON PLANS TO THE NEAREST DESIGNATED IDF LOCATION, U.O.N. MAKE TERMINATIONS AT BOTH DATA OUTLET AND IDF LOCATION.
2. ALL CABLE SHALL BE ROUTE DIRECTLY FROM STATION TO IDF/MDF LOCATION WITHOUT SPLICE OR INTERRUPTION.
3. ALL CAT 6 CABLES ARE TO BE TESTED FOR COMPLIANCE WITH TRUE CAT 6 PERFORMANCE, USING A HAND HELD NETWORK SCANNER. HARD COPY AND SOFT COPY RESULTS ARE TO BE PROVIDED FOR ALL JACKS TESTED. NETWORK ANALYZER IS TO BE A FLUKE DSP 4500 OR OWNER APPROVED EQUIVALENT. SOFT COPY RESULTS TO BE PROVIDE ON A WINDOW XP OR LATER COMPACT DISK (CD).
4. ALL FIBER OPTIC CABLE RUNS WILL BE TESTED AND DOCUMENTATION PROVIDED TO SHOW THAT EACH STRAND MEETS OR EXCEEDS THE EIA/TIA-455 STANDARDS. PROVIDE RECORDED TEST RESULTS ON ALL CABLES PASSED FOR OWNER'S RECORDS. CONTRACTOR WILL TEST THE FIBER OPTIC CABLE PRIOR TO INSTALLATION TO CHECK FOR DEFECTS. IF THE CONTRACTOR DOES NOT TEST THE FIBER, AND DEFECTS ARE FOUND THAT REQUIRE THE CABLE TO BE REPLACED, THE CONTRACTOR IS RESPONSIBLE FOR THE CABLE. CONTRACTOR WILL TEST THE INSTALLED FIBER OPTIC CABLES AND DOCUMENT EACH STRAND'S RESULT. IF ANY STRANDS ARE FOUND TO BE OUT SPECIFICATION, THE CONTRACTOR WILL REPAIR THE STRANDS TERMINATION AS NEEDED OR REPLACE CABLE IF REQUIRED. THE CONTRACTOR WILL RETEST AFTER REPAIRS.
5. SEE DATA SPECIFICATIONS FOR ADDITIONAL REQUIREMENTS.

EQUIPMENT SCHEDULE:

1. OUTDOOR WIRELESS ANTENNA - AIRAYA WIRELESS GRID 300
2. OUTDOOR WIRELESS ANTENNA - AIRAYA WIRELESS GRID 300 - POWER INJECTOR.
3. SURGE PROTECTOR - TRIPP LITE ISOBAR-4-ULTRA WITH 6 FT. POWER CORD.
4. POWER DISTRIBUTION UNIT - TRIPP LITE PDUMH15NET2 WITH 12 FT. POWER CORD.
5. GATEWAY - SONIC WALL TZ300.
6. WIRELESS ACCESS PORT, POE SWITCH - PLANET IGS-4215-4P4T2S/ PWR-120-48.
7. SECURITY CAMERA POE SWITCH - PLANET IGS-4215-4P4T2S/ PWR-120-48.
8. WIRELESS ACCESS POINT - AEROHIVE AP1130.
9. SECURITY CAMERA - ARECONT AV12275 DN-NL. SEE SECURITY PLAN FOR CAMERA LENS REQUIREMENT.
10. NEW SIGNAL TERMINAL CAM - FIBER & PDU EQUIPMENT PROVIDED & INSTALL BY CITY IT.

CABLE SCHEDULE:

1. DATA - CAT-6
2. POWER CORD, PROVIDED WITH THE EQUIPMENT.
3. FIBER - 8-STRAND ARMORED MULTI-MODE OM2 50/125 WITH MSB-SX2 SFP AND LC CONNECTOR.

SHEET NOTES:

1. CONTRACTOR SHALL COORDINATE FINAL ANTENNA LOCATION AND CONNECTION WITH CITY IT PRIOR TO INSTALLATION.
2. CONTRACTOR SHALL COORDINATE SIGNAL TERMINAL CAN (STC) SIZE WITH CITY IT PRIOR TO INSTALLATION.
3. ALL WIRELESS ACCESS POINT (WAP) AND SECURITY CAMERA ARE ESTIMATED TO BE LESS THAN 280 FEET FROM IDF. IF ACTUAL ON-SITE DISTANCE BETWEEN WAP/CAMERA AND IDF IS GREATER THAN 280 FEET, THE CONTRACTOR IS TO INFORM THE CITY IT AND DESIGN TEAM OF THE ACTUAL DISTANCE PRIOR TO INSTALL OF THE WAP/CAMERA.

American Consulting Engineers Electrical, Inc.
1590 The Alameda Suite 200
San Jose, CA 95126
408/236-2312
Fax: 408/236-2316
JOB #E16140.00

REGISTERED PROFESSIONAL ENGINEER KRANTY S. FERNANDO E16890 Exp. 06/30/17 ELECTRICAL STATE OF CALIFORNIA

NO.	DESCRIPTION	DATE	BY

Revisions

WORK ACCEPTED: INSPECTOR:
BY: DATE:

DRAWN: MG
DESIGN: KC
CHECKED: SF
HOR:
VERT:
APPROVED: K. Burke
DATE: 12/15/16
KARL D. BURKE- CITY ENGINEER
RCE 39416 EXP. 12/31/2017
JOB NUMBER: 135013

City of Morgan Hill
Public Works Department
CITY OF MORGAN HILL
17575 Peak Ave. Morgan Hill, CA 95037 (408)778-6480, Fax (408)779-7236

DEL MONTE AVE AND WEST 3RD STREET, MORGAN HILL, CA 95037

DATA & SECURITY CAMERA RISER DIAGRAM

HILLTOP PARK

FILE NUMBER: 1520400
PRINT DATE: 12/07/16
SHEET NUMBER: E2.2

BID DRAWINGS

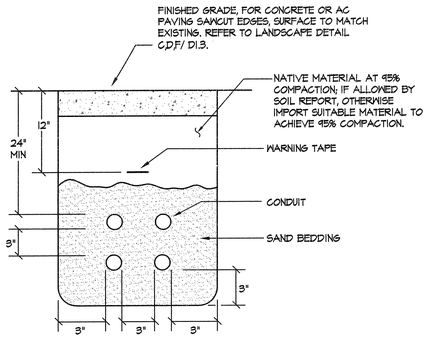

1. COORDINATE TRENCH CONDUIT LAYOUT WITH OTHER CONDUIT SYSTEMS.

1 TYPICAL TRENCH DETAIL

E4.1 SCALE: NOT TO SCALE

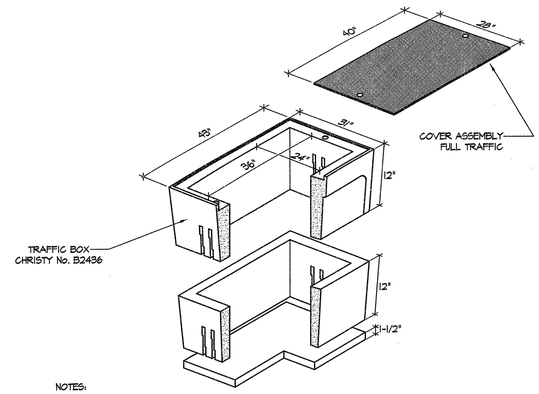

NOTES:

1. HIGH DENSITY REINFORCED CONCRETE BOX WITH NON-SETTING SHOULDERS POSITIONED TO MAINTAIN GRADE AND FACILITATE BACK FILLING. APPROXIMATE DIMENSIONS SHOWN.
2. ALL CONDUITS SHALL ENTER FROM SIDES OF PULL BOX. CONTRACTOR SHALL PROVIDE PULL BOX EXTENSION AS REQUIRED. NO CONDUITS SHALL BE ALLOWED FROM THE BOTTOM OF THE PULL BOX.
3. CONTRACTOR SHALL STACK CONDUITS AS REQUIRED TO MEET THE NEC CODE REQUIREMENTS.
4. PROVIDE BELL ENDS ON ALL CONDUIT.
5. PROVIDE 6" CONCRETE SLURRY AROUND BOX.
6. ALL PENETRATIONS INTO BOXES SHALL BE SEALED WITH GROUT.

2 B2436 ELECTRICAL VAULT

E4.1 NOT TO SCALE (FULL TRAFFIC COVER)

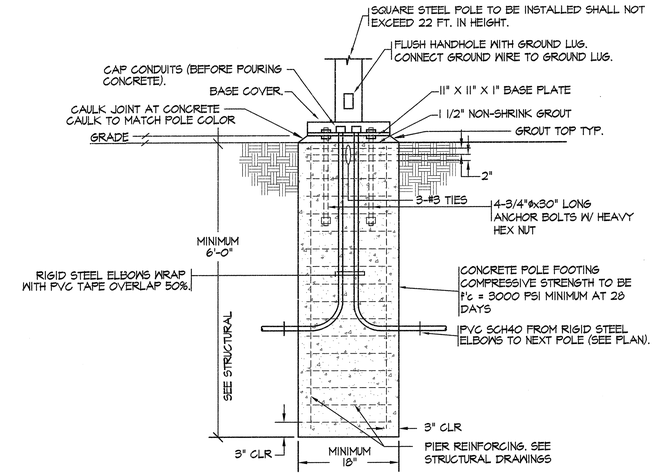

3 FLUSHED POLE BASE DETAIL

E4.1 NOT TO SCALE

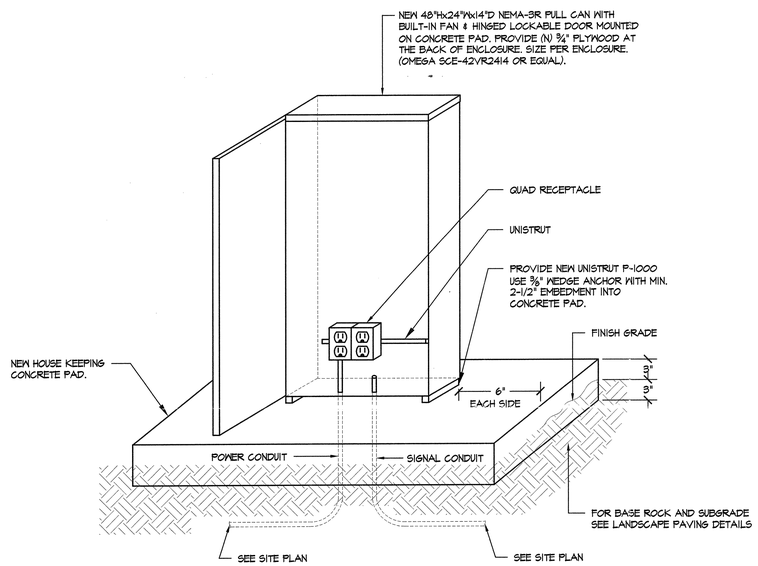

NEMA-3R POWER VENTED OUTDOOR IDF ENCLOSURE MOUNTED ON CONCRETE PAD

4 / E4.1 SCALE: NOT TO SCALE

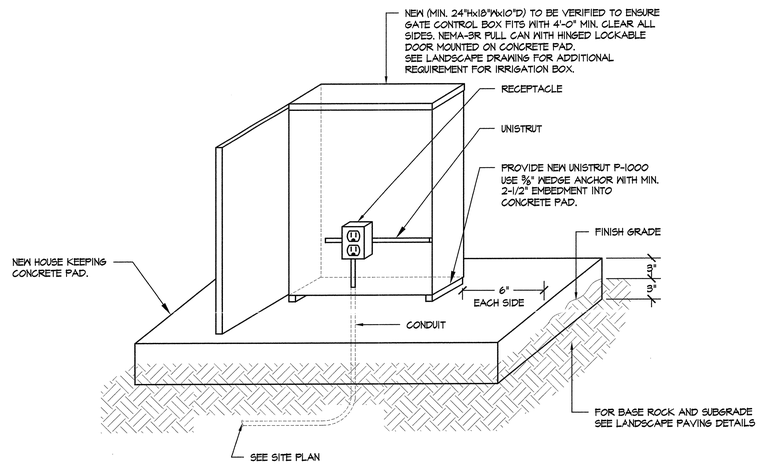

NEMA-3R REMOTE GATE CONTROLLER ENCLOSURE MOUNTED ON CONCRETE PAD

5 / E4.1 SCALE: NOT TO SCALE

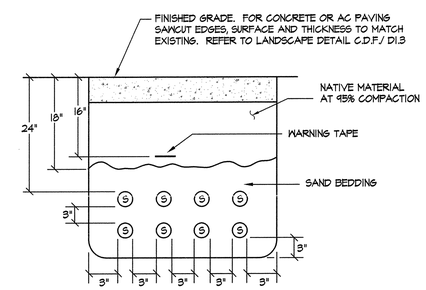

1. TRENCH PER PG&E STANDARDS

S - SECONDARY

6 PG&E TRENCH DETAIL SECONDARY SIDE

E4.1 SCALE: NOT TO SCALE

American Consulting Engineers Electrical, Inc.
1590 The Alameda Suite 200
San Jose, CA 95126
408/236-2312
Fax: 408/236-2316
JOB #E16140.00

REGISTERED PROFESSIONAL ENGINEER ANTHONY S. FUENTAJADA E16890 Exp. 06/30/17 ELECTRICAL STATE OF CALIFORNIA

NO.	DESCRIPTION	DATE	BY

Revisions

WORK ACCEPTED: INSPECTOR: BY: DATE:

DRAWN: MG DESIGN: KC HOR: CHECKED: SF VERT: APPROVED: DATE: 12/15/16 JOB NUMBER: 135013

KARL D. BURKE- CITY ENGINEER RCE 39416 EXP. 12/31/2017

CITY OF MORGAN HILL
City of Morgan Hill
Public Works Department
17575 Peak Ave. Morgan Hill, CA 95037 (408)778-6480, Fax (408)779-7236

DEL MONTE AVE AND WEST 3RD STREET, MORGAN HILL, CA 95037

ELECTRICAL DETAILS
HILLTOP PARK

FILE NUMBER: 1520400
PRINT DATE: 12/07/16
SHEET NUMBER: E4.1

BID DRAWINGS

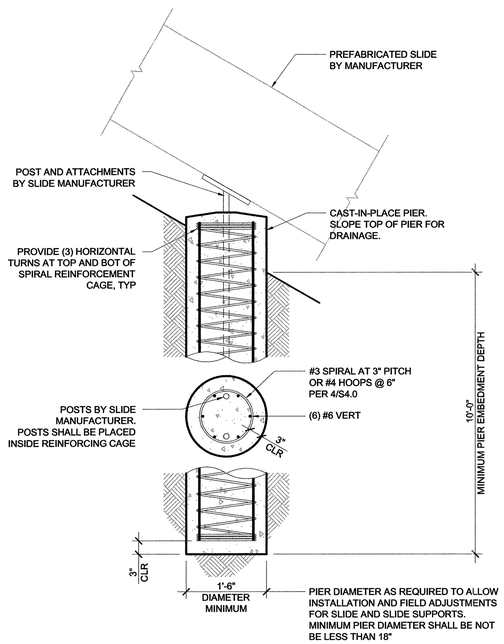

SLIDE PIER FOOTING (3)

SCALE: 3/4" = 1'-0"

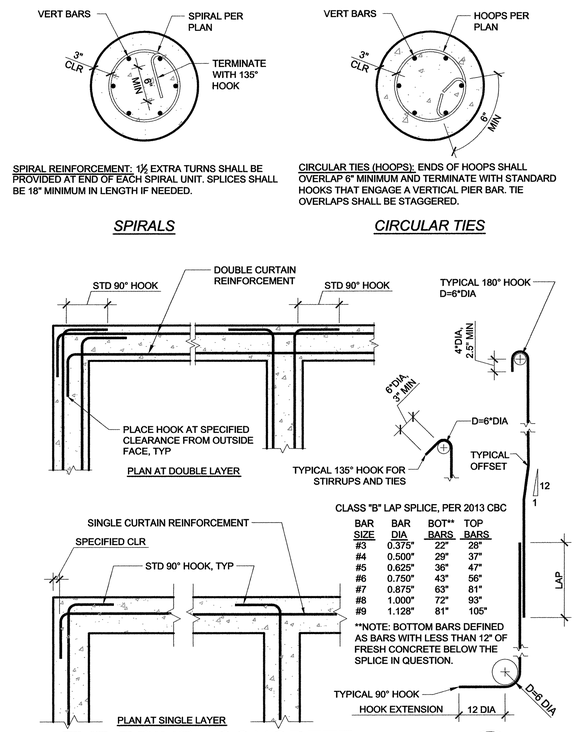

CLASS "B" LAP SPLICE, PER 2013 CBC

BAR SIZE	BAR DIA	BOT** BARS	TOP BARS
#3	0.375"	22"	28"
#4	0.500"	29"	37"
#5	0.625"	36"	47"
#6	0.750"	43"	56"
#7	0.875"	63"	81"
#8	1.000"	72"	93"
#9	1.128"	81"	105"

**NOTE: BOTTOM BARS DEFINED AS BARS WITH LESS THAN 12" OF FRESH CONCRETE BELOW THE SPLICE IN QUESTION.

TYP REINF - CONCRETE (2)

SCALE: NTS

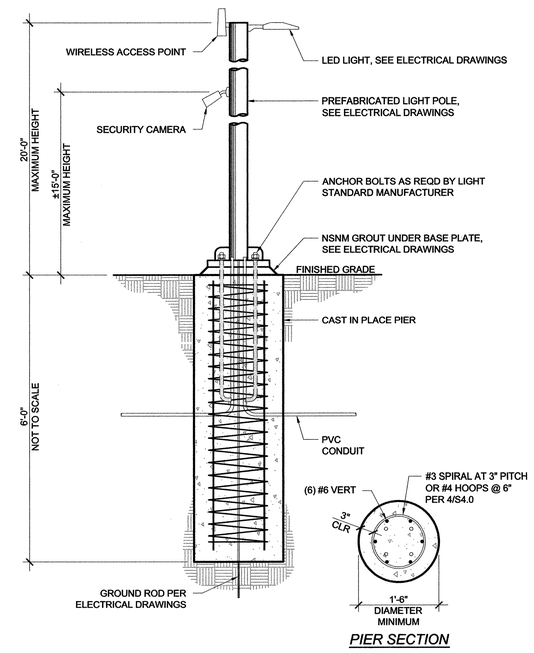

SECURITY CAMERA PIER FOOTING (1)

SCALE: 3/4" = 1'-0"

NO.	DESCRIPTION	DATE	BY

Revisions

WORK ACCEPTED: INSPECTOR:
BY: DATE:

DRAWN: PD/ED DESIGN: PD/ED HOR: AS NOTED
CHECKED: DH VERT: AS NOTED
APPROVED: DATE: 12/15/16 JOB NUMBER: 15245

City of Morgan Hill
Public Works Department
17575 Peak Ave. Morgan Hill, CA 95037 (408)778-6480, Fax (408)779-7236

Mesiti-Miller Engineering, Inc.
Civil and Structural Engineering
831-426-3160 www.mme.com

DEL MONTE AVE AND WEST 3RD STREET, MORGAN HILL, CA 95037

PIER FOUNDATION DETAILS HILLTOP PARK

FILE NUMBER: 1520400
PRINT DATE: 12/8/16
SHEET NUMBER: S1.0

BID DRAWINGS

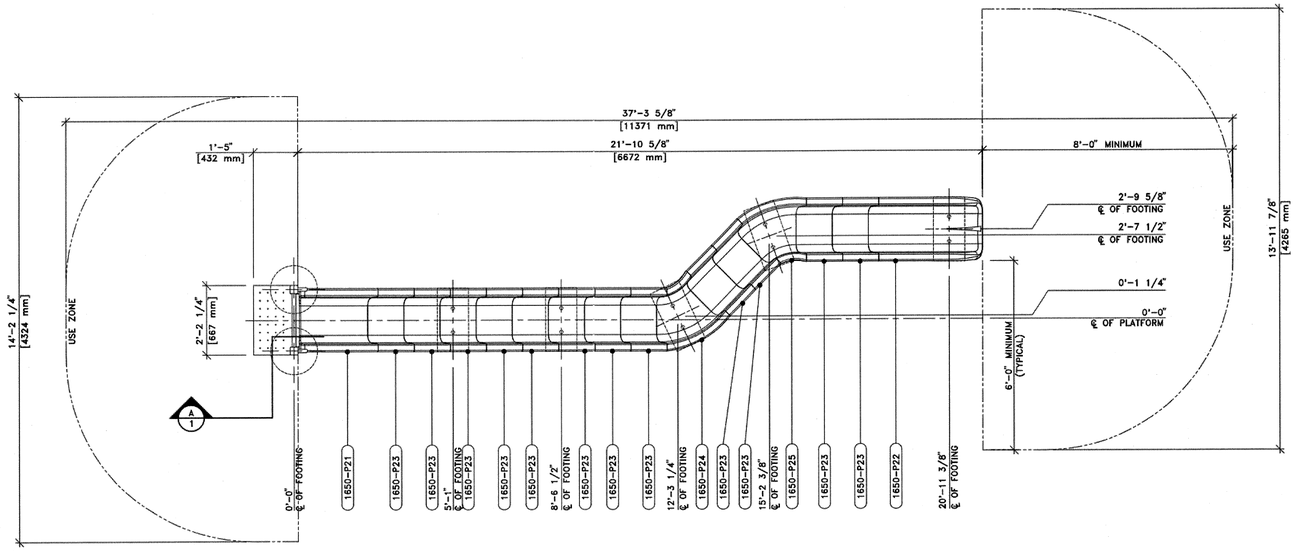

PLAN VIEW WITH USE ZONE
SCALE: 1/2"=1'-0"

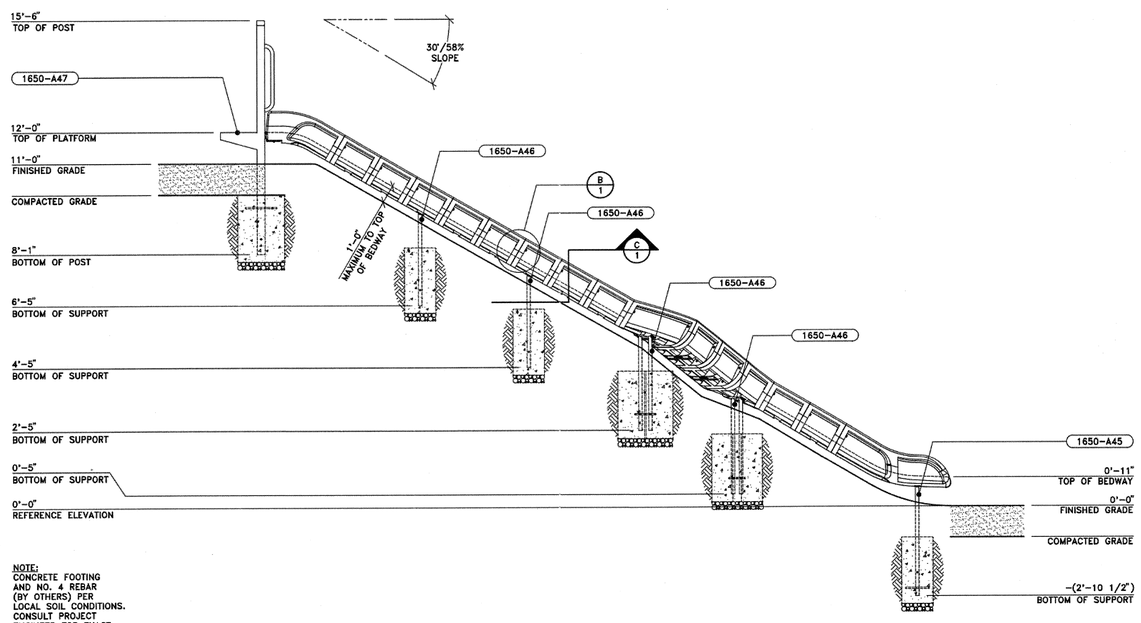

NOTE:
CONCRETE FOOTING AND NO. 4 REBAR (BY OTHERS) PER LOCAL SOIL CONDITIONS. CONSULT PROJECT ENGINEER FOR EXACT REQUIREMENTS.

SIDE ELEVATION
SCALE: 1/2"=1'-0"

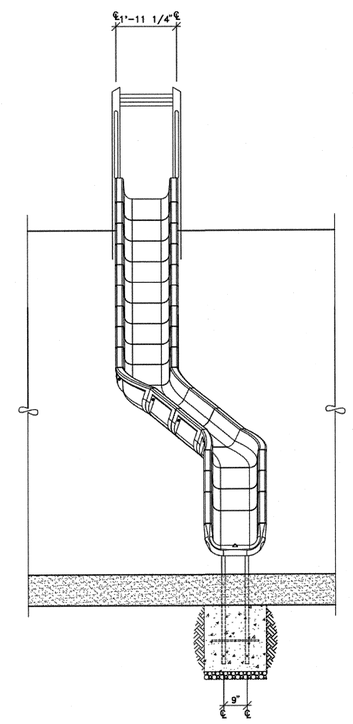

FRONT ELEVATION
SCALE: 1/2"=1'-0"

INSTALLATION INSTRUCTIONS:

1. DETERMINE FOOTING LOCATIONS AND DIG HOLES REQUIRED.
2. INSTALL ENTRANCE ASSEMBLY PER DIMENSIONS SHOWN.
3. PRE-ASSEMBLE SLIDE CHUTE SECTIONS PER DETAIL B/1. THEN ATTACH SUPPORTS TO ASSEMBLED SLIDE AT LOCATIONS SHOWN PER DETAIL C/1.
4. BRACE ASSEMBLED SLIDE IN PLACE AND CONNECT TO ENTRANCE ASSEMBLY AS SHOWN IN DETAIL A/1.
5. CHECK TO SEE THAT ALL CONNECTIONS ARE FLUSH AND TIGHT AND THE SUPPORT ARE BRACED SECURELY IN THE FOOTING HOLES, PER DIMENSIONS SHOWN. THEN POUR CONCRETE.

   NOTE: KEEP CHILDREN OFF APPARATUS UNTIL THE ASSEMBLY IS COMPLETE AND THE CONCRETE IS CURED.
6. AFTER CONCRETE CURES, REMOVE BRACING AND BACK FILL FOOTING HOLES.

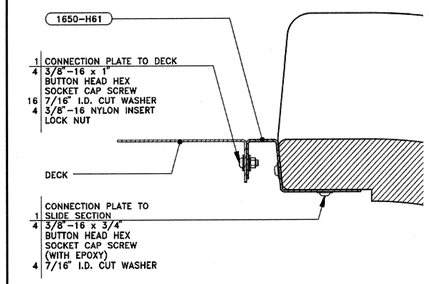

A/1 CONNECTION DETAIL
SCALE: 3"=1'-0"

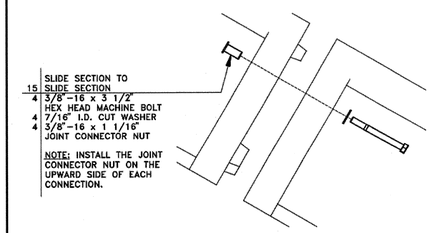

NOTE: INSTALL THE JOINT CONNECTOR NUT ON THE UPWARD SIDE OF EACH CONNECTION.

B/1 TYPICAL CONNECTION DETAIL
SCALE: 3"=1'-0"

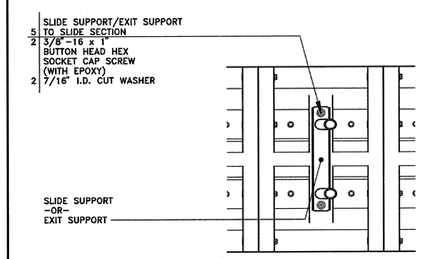

C/1 TYPICAL CONNECTION DETAIL
SCALE: 1 1/2"=1'-0"

PARTS LIST

PART NO.	QTY.	DESCRIPTION
1650-P21	1	ENTRANCE SECTION
1650-P22	1	EXIT SECTION
1650-P23	12	STRAIGHT SECTION
1650-P24	1	LEFT CURVED SECTION
1650-P25	1	RIGHT CURVED SECTION
1650-A47	1	ENTRANCE ASSEMBLY
1650-A45	1	EXIT SUPPORT
1650-A46	4	SLIDE SUPPORT
1650-H61	1	CONNECTION PLATE
B338-16	60	3/8"-16 x 3 1/2" HEX HEAD MACHINE BOLT
S138-03	4	3/8"-16 x 1" BUTTON HEAD HEX SOCKET CAP SCREW
S138-04	10	3/8"-16 x 1" BUTTON HEAD HEX SOCKET CAP SCREW (WITH EPOXY)
S138-02	4	3/8"-16 x 3/4" BUTTON HEAD HEX SOCKET CAP SCREW (WITH EPOXY)
W144-01	90	7/16" I.D. CUT WASHER
N938-05	60	3/8"-16 x 1 1/16" JOINT CONNECTOR NUT
N138-01	4	3/8"-16 NYLON INSERT LOCK NUT

⚠WARNING
SEE IMPORTANT SAFETY NOTES AND MAINTENANCE INSTRUCTIONS ON DRAWING NO. E-1000-L13

Date	Revision	By
△		
△		
△		
△		

Scale NOTED | Drawn by: Ian 07-27-16 | Ck'd by: CL 07-27-16

COLUMBIA CASCADE COMPANY
Makers of TimberForm®, PipeLine®, RePlay® TimberForm®-2 and CycLoops® Products.
1300 S.W. Sixth Avenue, Suite 310 Telephone 503/223-1157
Portland, Oregon 97201-3464 Facsimile 503/223-4530
U.S.A.

This drawing reveals the copyrighted intellectual property of Columbia Cascade Company. Not for use by others without our express, written authorization.

Title: TIMBERFORM
MODEL NO. 1650-123-EMB-M
EMBANKMENT SLIDE CHUTE, CURVED
HILLTOP PARK
MORGAN HILL, CA
PARKPACIFIC, INC.

Drawing No. P-16123-T | Sheet 1 of 3

NO.	DESCRIPTION	DATE	BY

Revisions

WORK ACCEPTED: INSPECTOR:
BY: DATE:

DRAWN: DESIGN: HOR: N/A
CHECKED: VERT: N/A
APPROVED: DATE: 12/15/16 JOB NUMBER: 135013
KARL D. BARKE - CITY ENGINEER
RCE 39416 EXP. 12/31/2017

City of Morgan Hill
Public Works Department
CITY OF MORGAN HILL
17575 Peak Ave. Morgan Hill, CA 95037 (408)778-6480, Fax (408)779-7236

DEL MONTE AVE AND WEST 3RD STREET, MORGAN HILL, CA 95037

SLIDE DETAILS
HILLTOP PARK

FILE NUMBER: 1520400
PRINT DATE: 12/07/16
SHEET NUMBER: SL3.1

BID ALTERNATE NO.2

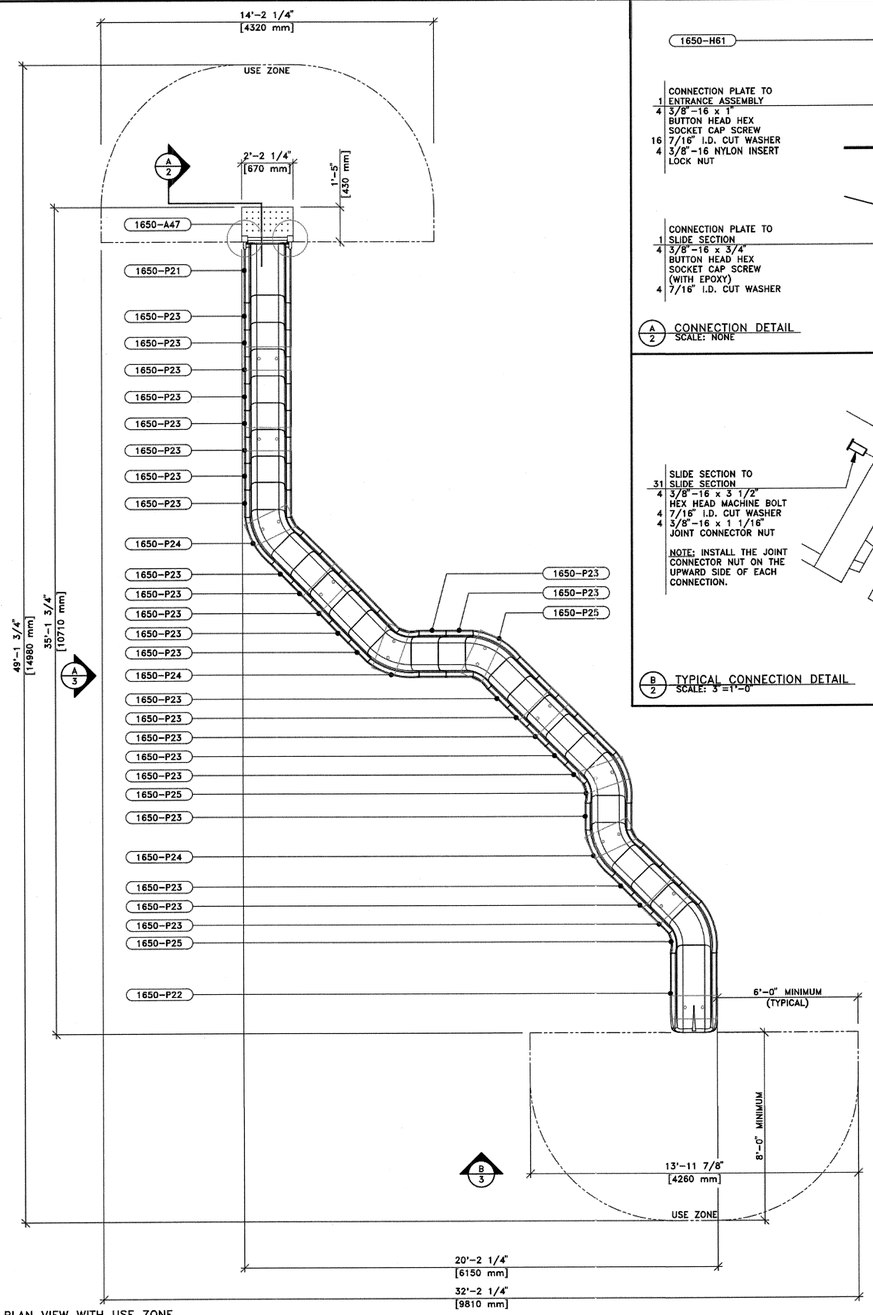

PLAN VIEW WITH USE ZONE
SCALE: 3/8"=1'-0

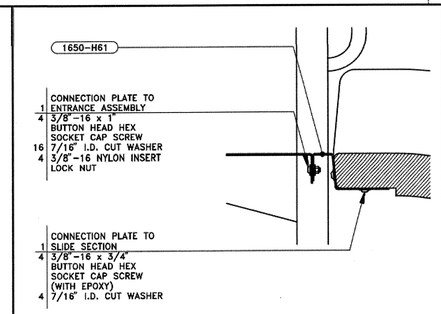

A/2 CONNECTION DETAIL
SCALE: NONE

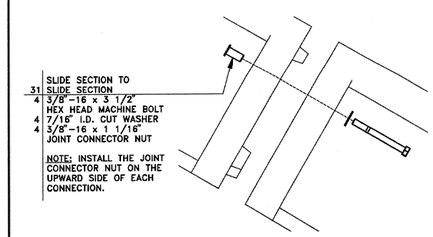

B/2 TYPICAL CONNECTION DETAIL
SCALE: 3"=1'-0

FOOTING NOTES:

1. USE THIS FOOTING LOCATION PLAN TO LOCATE REQUIRED CONCRETE FOOTINGS.
2. ORIENTATION IS PER PLAN VIEW. ALL DIMENSIONS ARE TO CENTERLINE OF FOOTING LOCATIONS.
3. MINIMUM FOOTING SIZE CODE:

   (18) 18" DIAMETER

   [ ] AS NOTED (WIDTH X LENGTH)

   DUE TO LOCAL CONDITIONS, CONSULT PROJECT ENGINEER FOR EXACT REQUIREMENTS.
4. CONCRETE AND NO. 4 REBAR BY OTHERS.

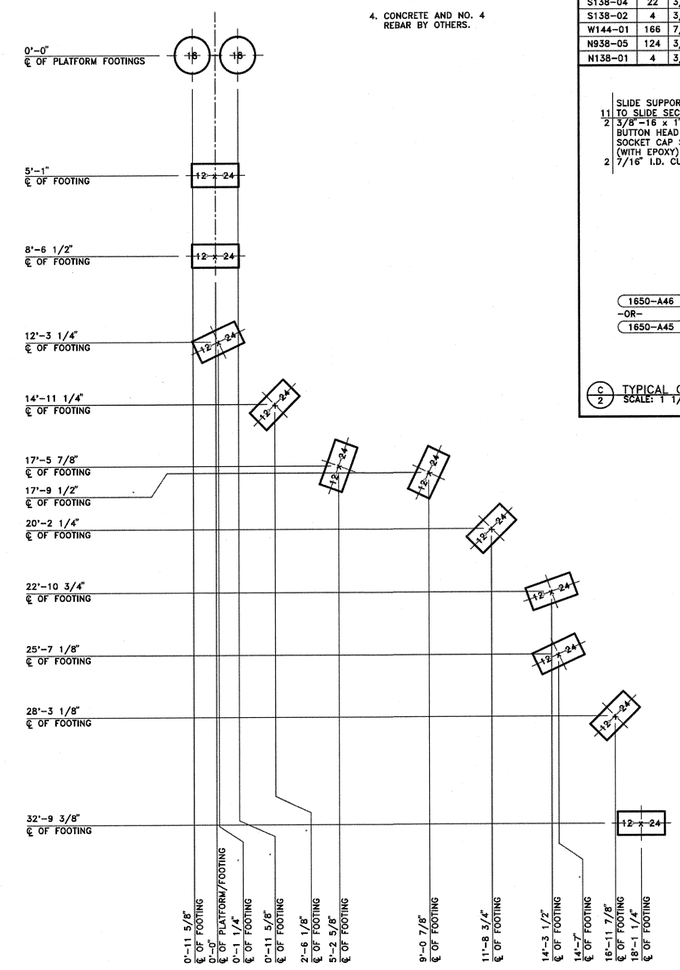

FOOTING LOCATION PLAN
SCALE: 3/8"=1'-0

PARTS LIST

PART NO.	QTY.	DESCRIPTION
1650-P21	1	ENTRANCE SECTION
1650-P22	1	EXIT SECTION
1650-P23	24	STRAIGHT SECTION
1650-P24	3	LEFT CURVED SECTION
1650-P25	3	RIGHT CURVED SECTION
1650-A45	1	EXIT SUPPORT
1650-A46	10	SLIDE SUPPORT
1650-A47	1	ENTRANCE ASSEMBLY
1650-H61	1	CONNECTION PLATE
B338-16	124	3/8"-16 x 3 1/2" HEX HEAD MACHINE BOLT
S138-03	4	3/8"-16 x 1" BUTTON HEAD HEX SOCKET CAP SCREW
S138-04	22	3/8"-16 x 1" BUTTON HEAD HEX SOCKET CAP SCREW (WITH EPOXY)
S138-02	4	3/8"-16 x 3/4" BUTTON HEAD HEX SOCKET CAP SCREW (WITH EPOXY)
W144-01	166	7/16" I.D. CUT WASHER
N938-05	124	3/8"-16 x 1 1/16" JOINT CONNECTOR NUT
N138-01	4	3/8"-16 NYLON INSERT LOCK NUT

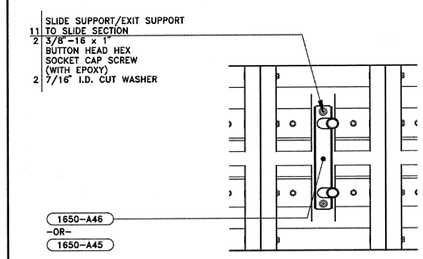

C/2 TYPICAL CONNECTION DETAIL
SCALE: 1 1/2"=1'-0

⚠WARNING
SEE IMPORTANT SAFETY NOTES AND MAINTENANCE INSTRUCTIONS ON DRAWING NO. E-1000-L13

INSTALLATION INSTRUCTIONS:

1. DETERMINE FOOTING LOCATIONS AND DIG HOLES REQUIRED.
2. INSTALL ENTRANCE ASSEMBLY PER DIMENSIONS SHOWN.
3. PRE-ASSEMBLE SLIDE CHUTE SECTIONS PER DETAIL B/2. THEN ATTACH SUPPORTS TO ASSEMBLED SLIDE AT LOCATIONS SHOWN PER DETAIL C/2.
4. BRACE ASSEMBLED SLIDE IN PLACE AND CONNECT TO ENTRANCE ASSEMBLY AS SHOWN IN DETAIL A/2.
5. CHECK TO SEE THAT ALL CONNECTIONS ARE FLUSH AND TIGHT AND THE SUPPORT ARE BRACED SECURELY IN THE FOOTING HOLES, PER DIMENSIONS SHOWN. THEN POUR CONCRETE.

   NOTE: KEEP CHILDREN OFF APPARATUS UNTIL THE ASSEMBLY IS COMPLETE AND THE CONCRETE IS CURED.
6. AFTER CONCRETE CURES, REMOVE BRACING AND BACK FILL FOOTING HOLES.

Date	Revision	By
△		
△		
2 09-14-16	PER CUSTOMER	Ian/CL
1 08-24-16	PER CUSTOMER	Ian/CL

Scale: NOTED | Drawn by: Ian 07-27-16 | Ck'd by: CL 07-27-16

COLUMBIA CASCADE COMPANY
Makers of TimberForm®, PipeLine®, RePlay® TimberForm®-2 and CycLoops® Products.
1300 S.W. Sixth Avenue, Suite 310 Portland, Oregon 97201-3464 U.S.A.
Telephone 503/223-1157 Facsimile 503/223-4530

This drawing reveals the copyrighted intellectual property of Columbia Cascade Company. Not for use by others without our express, written authorization.

Title: TIMBERFORM MODEL NO. 1650-233-EMB-M EMBANKMENT SLIDE CHUTE, CURVED HILLTOP PARK MORGAN HILL, CA PARKPACIFIC, INC.

Drawing No. P-16123-T | Sheet 2 of 3

NO.	DESCRIPTION	DATE	BY

Revisions

WORK ACCEPTED: INSPECTOR: BY: DATE:

DRAWN: DESIGN: CHECKED: APPROVED: DATE: 12/15/16
KARL D. BJARKE - CITY ENGINEER RCE 39416 EXP. 12/31/2017

HOR: N/A VERT: N/A JOB NUMBER: 135013

CITY OF MORGAN HILL
City of Morgan Hill
Public Works Department
17575 Peak Ave. Morgan Hill, CA 95037 (408)778-6480, Fax (408)779-7236

DEL MONTE AVE AND WEST 3RD STREET, MORGAN HILL, CA 95037

SLIDE DETAILS
HILLTOP PARK

FILE NUMBER: 1520400
PRINT DATE: 12/07/16
SHEET NUMBER: SL3.2

BID ALTERNATE NO.2

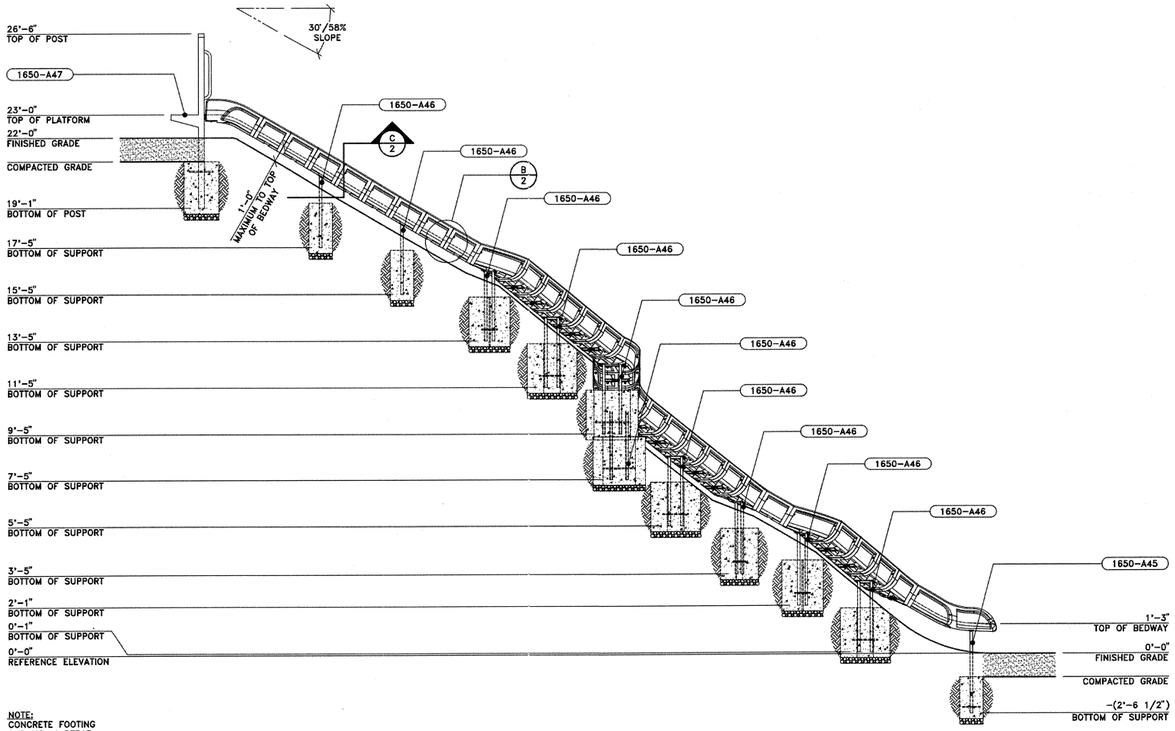

NOTE:
CONCRETE FOOTING AND NO. 4 REBAR (BY OTHERS) PER LOCAL SOIL CONDITIONS. CONSULT PROJECT ENGINEER FOR EXACT REQUIREMENTS.

A/3 SIDE ELEVATION
SCALE: 3/8"=1'-0"

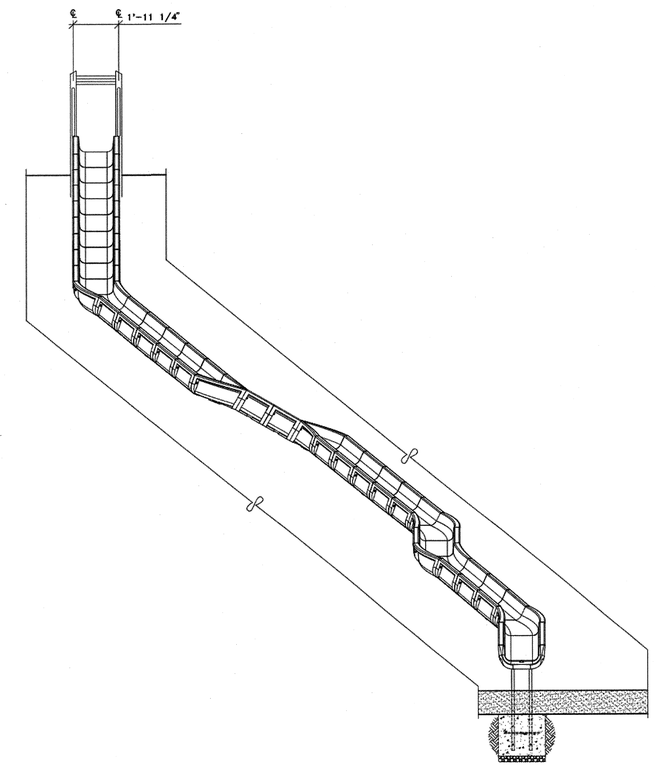

B/3 FRONT ELEVATION
SCALE: 3/8"=1'-0"

WARNING
SEE IMPORTANT SAFETY NOTES AND MAINTENANCE INSTRUCTIONS ON DRAWING NO. E-1000-L13

Date	Revision	By
△		
△		
4 09-14-16	PER CUSTOMER	Ian/CL
1 08-24-16	PER CUSTOMER	Ian/CL

Scale: NOTED | Drawn by: Ian 07-27-16 | Ck'd by: CL 07-27-16

COLUMBIA CASCADE COMPANY
Makers of TimberForm®, PipeLine®, RePlay® TimberForm®-2 and CycLoops® Products.
1300 S.W. Sixth Avenue, Suite 310 Portland, Oregon 97201-3464 U.S.A.
Telephone 503/223-1157 Facsimile 503/223-4530

This drawing reveals the copyrighted intellectual property of Columbia Cascade Company. Not for use by others without our express, written authorization.

Title:
TIMBERFORM
MODEL NO. 1650-233-EMB-M
EMBANKMENT SLIDE CHUTE, CURVED
HILLTOP PARK
MORGAN HILL, CA
PARKPACIFIC, INC.

Drawing No. P-16123-T | Sheet 3 of 3

NO.	DESCRIPTION	DATE	BY

Revisions

WORK ACCEPTED: INSPECTOR:
BY: DATE:

DRAWN: DESIGN: HOR: N/A
CHECKED: VERT: N/A
APPROVED: DATE: 12/13/16 JOB NUMBER: 135013
KARL G. BLANKE - CITY ENGINEER RCE 39416 EXP. 12/31/2017

CITY OF MORGAN HILL
City of Morgan Hill
Public Works Department
17575 Peak Ave. Morgan Hill, CA 95037 (408)778-6480, Fax (408)779-7236

DEL MONTE AVE AND WEST 3RD STREET, MORGAN HILL, CA 95037

SLIDE DETAILS
HILLTOP PARK

FILE NUMBER: 1520400
PRINT DATE: 12/07/16
SHEET NUMBER: SL3.3

BID ALTERNATE NO.2