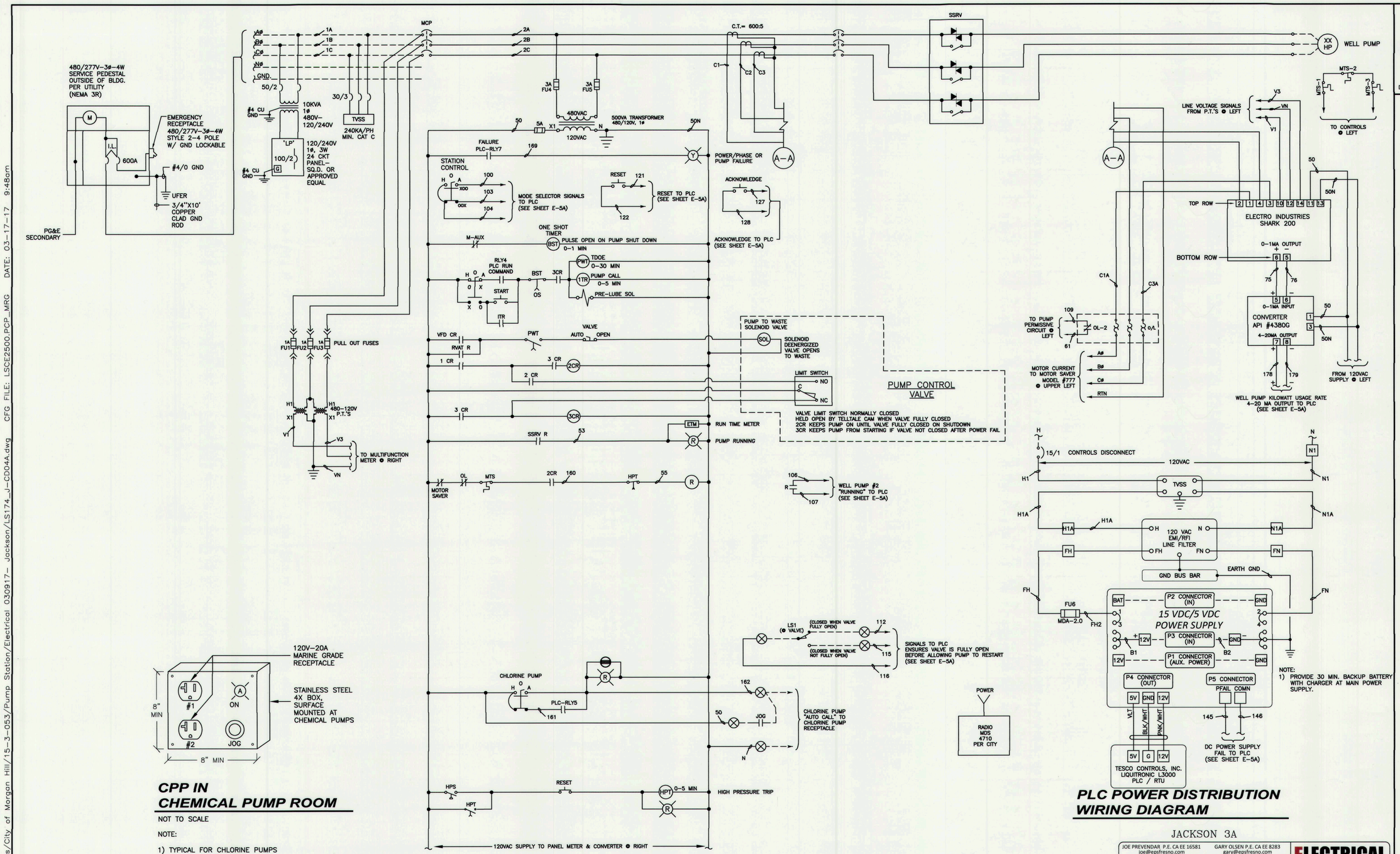

CPP IN CHEMICAL PUMP ROOM

NOT TO SCALE

NOTE:

1) TYPICAL FOR CHLORINE PUMPS

WELL PUMP WIRING DIAGRAM

PLC POWER DISTRIBUTION WIRING DIAGRAM

JACKSON 3A

JOE PREVENDAR P.E. CA EE 16581 joe@epsfresno.com
GARY OLSEN P.E. CA EE 8283 gary@epsfresno.com

JOB: LS-15-174 DATE: NOV 2016
FILE: LS174_J-CD04A
PLOT: 3/30/2017 9:34 AM / 1:1
DSGN: JPP DRWN: CRT

EPS IS RESPONSIBLE FOR ELECTRICAL SYSTEMS DESIGN ONLY. EPS IS NOT RESPONSIBLE FOR ELECTRICAL SAFETY WORK PROCEDURES AND/OR USE OF REQUIRED PERSONAL PROTECTIVE EQUIPMENT, SEE NFPA 70E "STANDARD FOR ELECTRICAL SAFETY IN THE WORKPLACE" AND OSHA 29 CFR. CONTRACTOR MUST READ SPECIFICATIONS AND INSTALL MATERIAL AS PER SPECIFICATIONS AND/OR PLANS OR AS PER E.P.S. APPROVAL. PLANS AND SPECIFICATIONS ONLY APPLY TO THE PROJECT FOR WHICH THEY WERE CREATED.

ELECTRICAL POWER SYSTEMS INC.
PROFESSIONAL AND CONSULTING ELECTRICAL ENGINEERING
4049 N FRESNO ST, FRESNO, CA 93726
P: (559) 221-7230 F: (559) 221-0507

REGISTERED PROFESSIONAL ENGINEER JOSEPH P. PREVENDAR No. 16581 ELECTRICAL STATE OF CALIFORNIA

DATE: 3-31-17

CONTROL WIRING DIAGRAM
Construction of 2 Pump Stations
Boys Ranch 2A & Jackson 3A
City of Morgan Hill
Morgan Hill, California

LUHDORFF & SCALMANINI CONSULTING ENGINEERS
500 FIRST STREET
WOODLAND, CALIFORNIA
PHONE: (530) 661-0109

REVISIONS		
NO.	DATE	REVISION

DATE: MARCH 2017
JOB NO.: 15-3-053
DESIGN BY:
DRAWN BY:
CHECKED BY:
FILE:

SHEET: E-4A

CAD FILE: G:/Projects/City of Morgan Hill/15-3-053/Pump Station/Electrical 030917- Jackson/LS174_J-CD04A.dwg CFG FILE: LSCE2500.PCP_MRG DATE: 03-17-17 9:48am

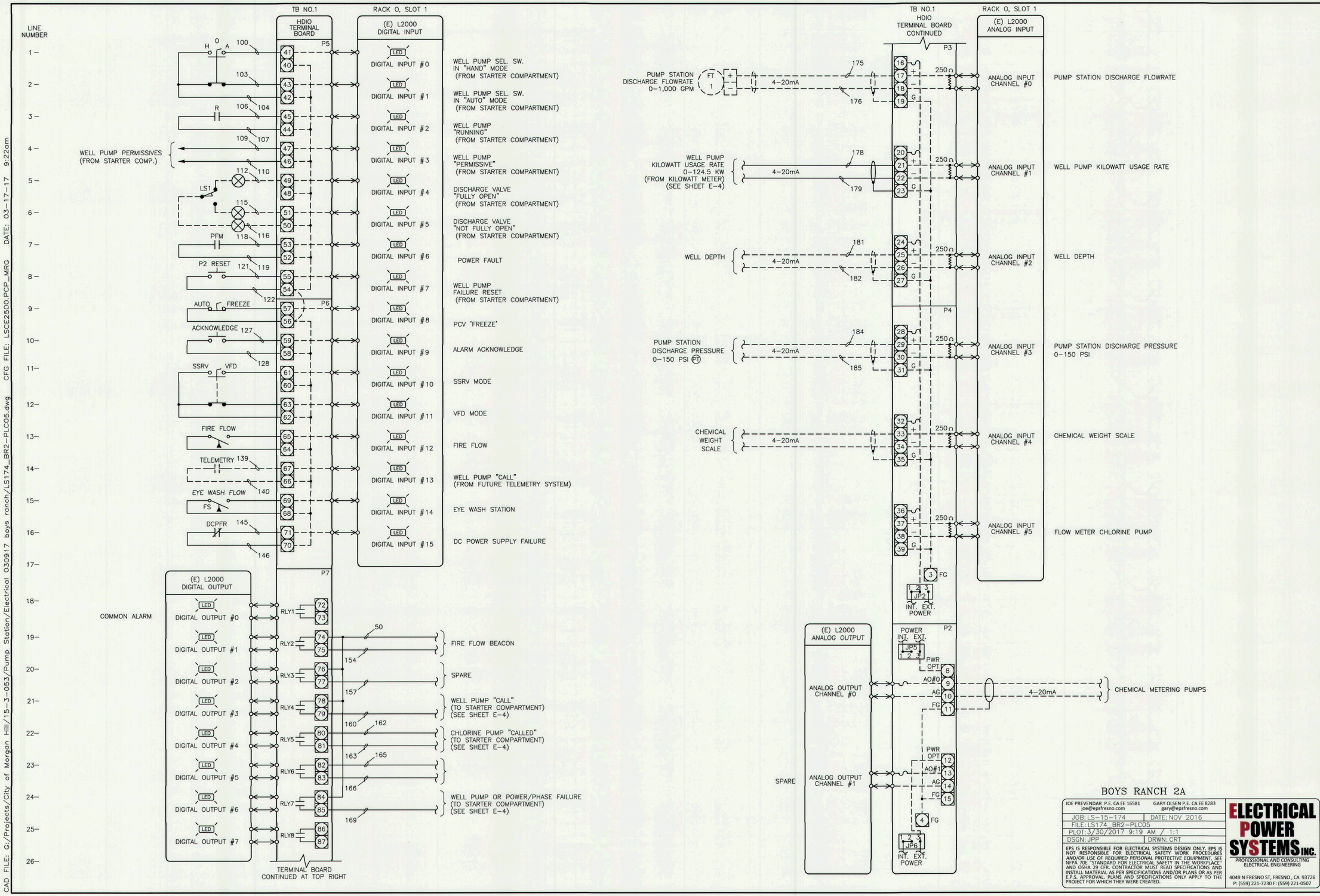

BOYS RANCH 2A

JOE PREVENDAR P.E. CA EE 16581 joe@epsfresno.com
GARY OLSEN P.E. CA EE 8283 gary@epsfresno.com

JOB: LS-15-174 DATE: NOV 2016
FILE: LS174_BR2-PLC05
PLOT: 3/30/2017 9:19 AM / 1:1
DSGN: JPP DRWN: CRT

EPS IS RESPONSIBLE FOR ELECTRICAL SYSTEMS DESIGN ONLY. EPS IS NOT RESPONSIBLE FOR ELECTRICAL SAFETY WORK PROCEDURES AND/OR USE OF REQUIRED PERSONAL PROTECTIVE EQUIPMENT. SEE NFPA 70E "STANDARD FOR ELECTRICAL SAFETY IN THE WORKPLACE" AND OSHA 29 CFR. CONTRACTOR MUST READ SPECIFICATIONS AND INSTALL MATERIAL AS PER SPECIFICATIONS AND/OR PLANS OR AS PER E.P.S. APPROVAL. PLANS AND SPECIFICATIONS ONLY APPLY TO THE PROJECT FOR WHICH THEY WERE CREATED.

ELECTRICAL POWER SYSTEMS INC.
PROFESSIONAL AND CONSULTING ELECTRICAL ENGINEERING
4049 N FRESNO ST, FRESNO, CA 93726
P: (559) 221-7230 F: (559) 221-0507

REGISTERED PROFESSIONAL ENGINEER JOSEPH P. PREVENDAR No. 16581 ELECTRICAL STATE OF CALIFORNIA
DATE: 3-31-17

PLC INPUT/OUTPUT
Construction of 2 Pump Stations
Boys Ranch 2A & Jackson 3A
City of Morgan Hill
Morgan Hill, California

LUHDORFF & SCALMANINI CONSULTING ENGINEERS
500 FIRST STREET
WOODLAND, CALIFORNIA
PHONE: (530) 661-0109

REVISIONS

NO.	DATE	REVISION

DATE: MARCH 2017
JOB NO.: 15-3-053
DESIGN BY:
DRAWN BY:
CHECKED BY:
FILE:

SHEET:
E-5

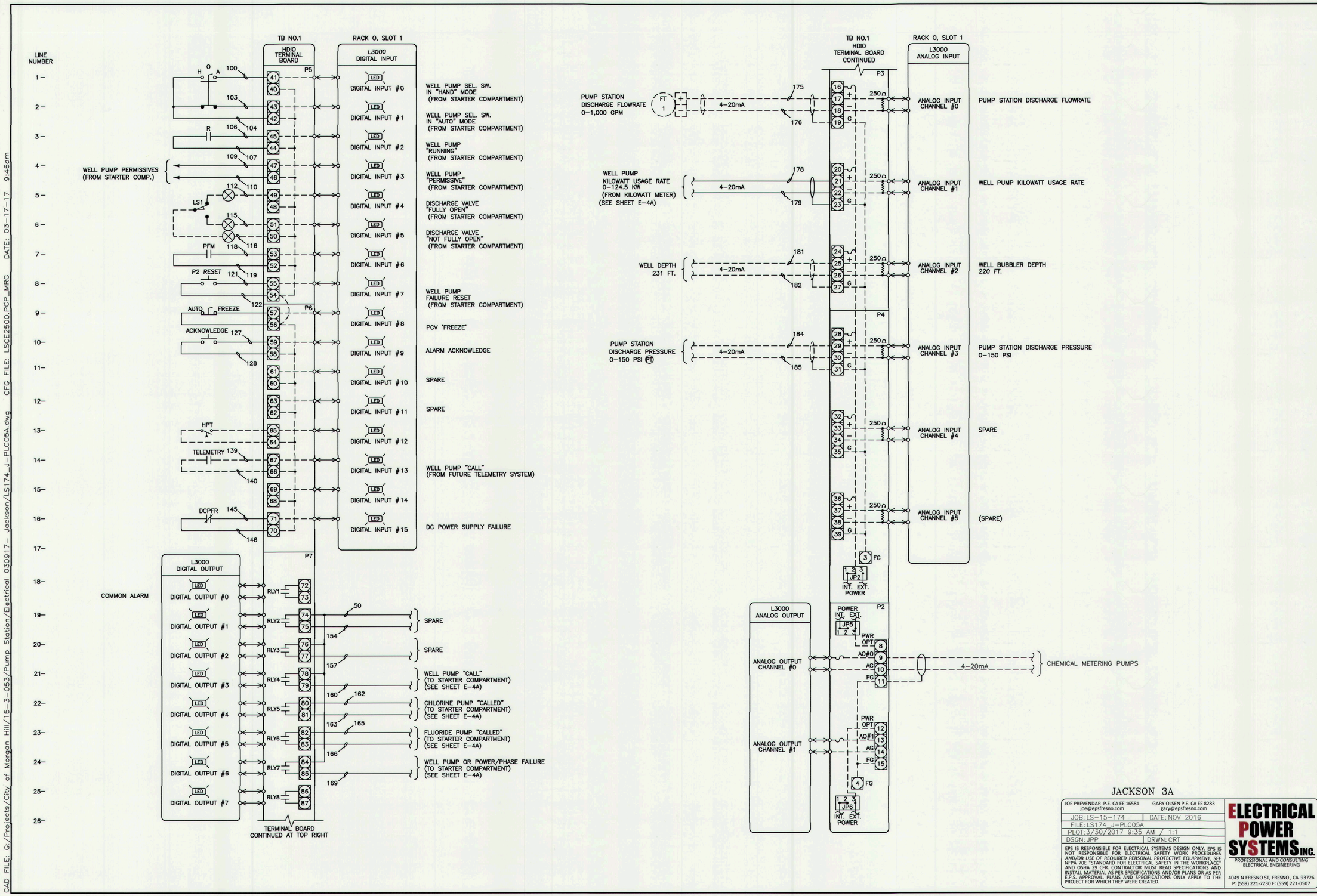

JACKSON 3A

JOE PREVENDAR P.E. CA EE 16581 joe@epsfresno.com	GARY OLSEN P.E. CA EE 8283 gary@epsfresno.com
JOB: LS-15-174	DATE: NOV 2016
FILE: LS174_J-PLC05A	
PLOT: 3/30/2017 9:35 AM / 1:1	
DSGN: JPP	DRWN: CRT

EPS IS RESPONSIBLE FOR ELECTRICAL SYSTEMS DESIGN ONLY. EPS IS NOT RESPONSIBLE FOR ELECTRICAL SAFETY WORK PROCEDURES AND/OR USE OF REQUIRED PERSONAL PROTECTIVE EQUIPMENT, SEE NFPA 70E "STANDARD FOR ELECTRICAL SAFETY IN THE WORKPLACE" AND OSHA 29 CFR. CONTRACTOR MUST READ SPECIFICATIONS AND INSTALL MATERIAL AS PER SPECIFICATIONS AND/OR PLANS OR AS PER E.P.S. APPROVAL. PLANS AND SPECIFICATIONS ONLY APPLY TO THE PROJECT FOR WHICH THEY WERE CREATED.

ELECTRICAL POWER SYSTEMS INC.
PROFESSIONAL AND CONSULTING ELECTRICAL ENGINEERING
4049 N FRESNO ST, FRESNO, CA 93726
P: (559) 221-7230 F: (559) 221-0507

REGISTERED PROFESSIONAL ENGINEER JOSEPH P. PREVENDAR No. 16581 ELECTRICAL STATE OF CALIFORNIA
DATE: 3-31-17

PLC INPUT/OUTPUT
Construction of 2 Pump Stations
Boys Ranch 2A & Jackson 3A
City of Morgan Hill
Morgan Hill, California

LUHDORFF & SCALMANINI CONSULTING ENGINEERS
500 FIRST STREET
WOODLAND, CALIFORNIA
PHONE: (530) 661-0109

REVISIONS

NO.	DATE	REVISION

DATE: MARCH 2017
JOB NO.: 15-3-053
DESIGN BY:
DRAWN BY:
CHECKED BY:
FILE:

SHEET:
E-5A

CAD FILE: G:/Projects/City of Morgan Hill/15-3-053/Pump Station/Electrical 030917- Jackson/LS174_J-PLC05A.dwg CFG FILE: LSCE2500.PCP_MRG DATE: 03-17-17 9:46am

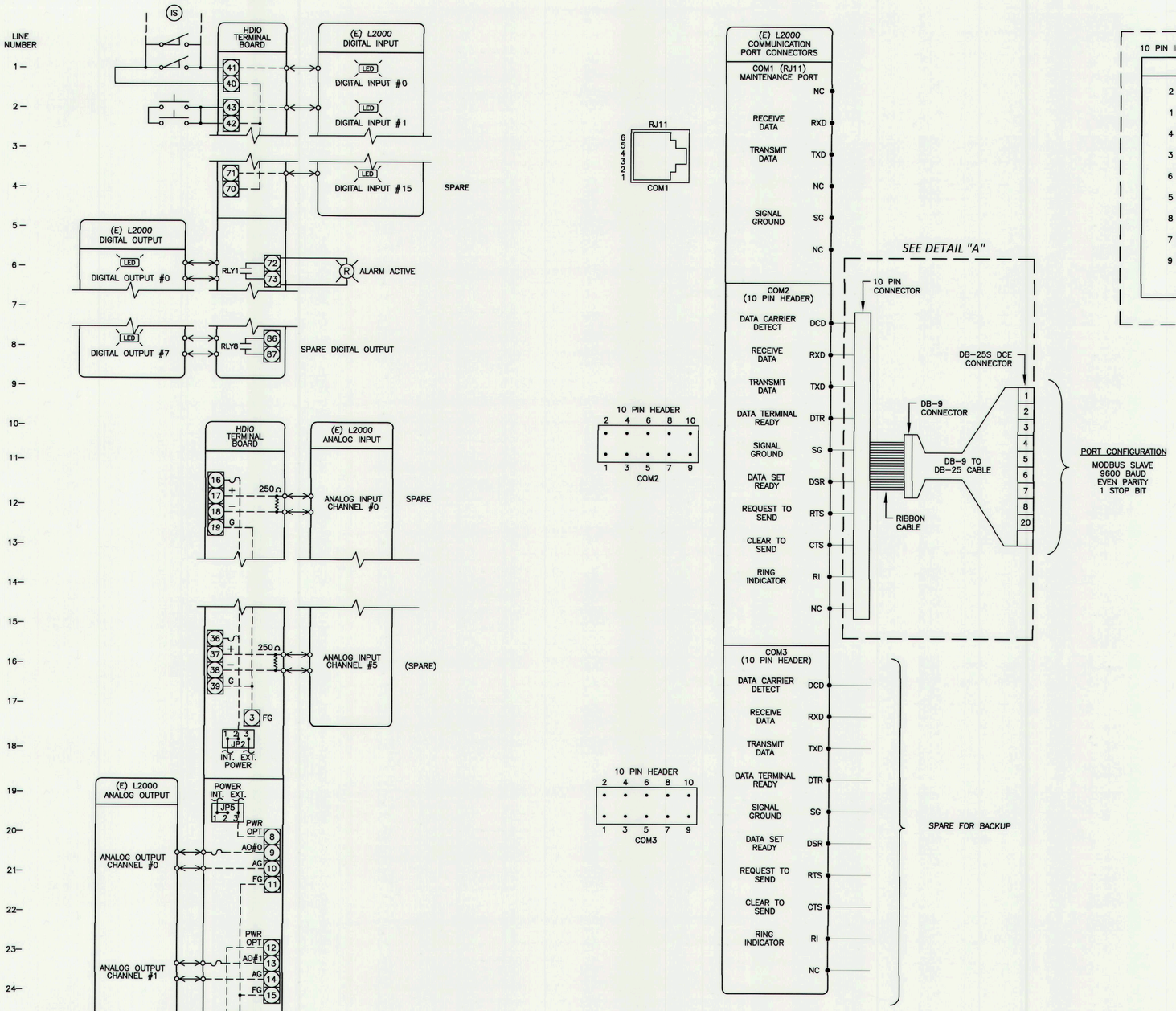

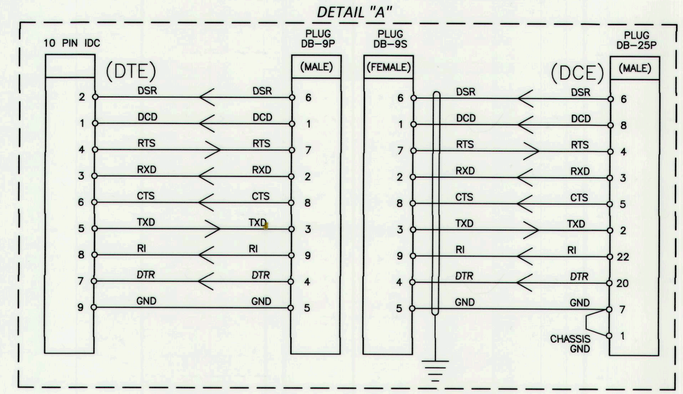

BOYS RANCH 2A

JOE PREVENDAR P.E. CA EE 16581 joe@epsfresno.com	GARY OLSEN P.E. CA EE 8283 gary@epsfresno.com
JOB: LS-15-174	DATE: NOV 2016
FILE: LS174_BR2-PLC06	
PLOT: 3/30/2017 9:20 AM / 1:1	
DSGN: JPP	DRWN: CRT

EPS IS RESPONSIBLE FOR ELECTRICAL SYSTEMS DESIGN ONLY. EPS IS NOT RESPONSIBLE FOR ELECTRICAL SAFETY WORK PROCEDURES AND/OR USE OF REQUIRED PERSONAL PROTECTIVE EQUIPMENT. SEE NFPA 70E "STANDARD FOR ELECTRICAL SAFETY IN THE WORKPLACE" AND OSHA 29 CFR. CONTRACTOR MUST READ SPECIFICATIONS AND INSTALL MATERIAL AS PER SPECIFICATIONS AND/OR PLANS OR AS PER E.P.S. APPROVAL. PLANS AND SPECIFICATIONS ONLY APPLY TO THE PROJECT FOR WHICH THEY WERE CREATED.

ELECTRICAL POWER SYSTEMS INC.
PROFESSIONAL AND CONSULTING ELECTRICAL ENGINEERING
4049 N FRESNO ST, FRESNO, CA 93726
P: (559) 221-7230 F: (559) 221-0507

REGISTERED PROFESSIONAL ENGINEER JOSEPH P. PREVENDAR No. 16581 ELECTRICAL STATE OF CALIFORNIA
DATE: 3-31-17

PLC INPUT/OUTPUT/COMMUNICATION
Construction of 2 Pump Stations
Boys Ranch 2A & Jackson 3A
City of Morgan Hill
Morgan Hill, California

LUHDORFF & SCALMANINI CONSULTING ENGINEERS
500 FIRST STREET
WOODLAND, CALIFORNIA
PHONE: (530) 661-0109

REVISIONS		
NO.	DATE	REVISION

DATE: MARCH 2017
JOB NO.: 15-3-053
DESIGN BY:
DRAWN BY:
CHECKED BY:
FILE:

SHEET:
E-6

CAD FILE: G:/Projects/City of Morgan Hill/15-3-053/Pump Station/Electrical 030917 boys ranch/LS174_BR2-PLC06.dwg CFG FILE: LSCE2500.PCP_MRG DATE: 03-16-17 2:57pm

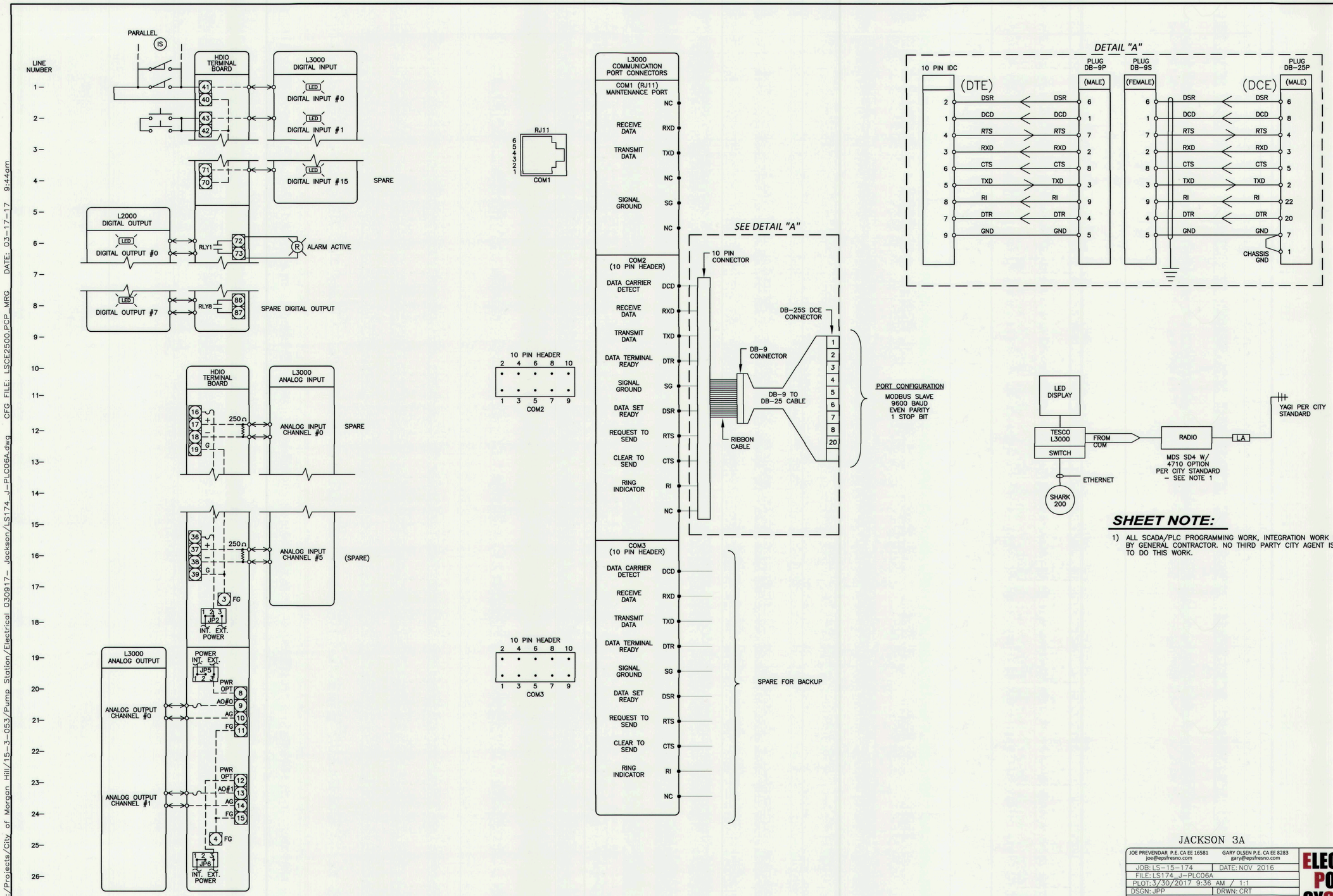

SHEET NOTE:

1) ALL SCADA/PLC PROGRAMMING WORK, INTEGRATION WORK PREFORMED BY GENERAL CONTRACTOR. NO THIRD PARTY CITY AGENT IS ASSIGNED TO DO THIS WORK.

JACKSON 3A

JOE PREVENDAR P.E. CA EE 16581 joe@epsfresno.com
GARY OLSEN P.E. CA EE 8283 gary@epsfresno.com

JOB: LS-15-174 DATE: NOV 2016
FILE: LS174_J-PLC06A
PLOT: 3/30/2017 9:36 AM / 1:1
DSGN: JPP DRWN: CRT

EPS IS RESPONSIBLE FOR ELECTRICAL SYSTEMS DESIGN ONLY. EPS IS NOT RESPONSIBLE FOR ELECTRICAL SAFETY WORK PROCEDURES AND/OR USE OF REQUIRED PERSONAL PROTECTIVE EQUIPMENT, SEE NFPA 70E "STANDARD FOR ELECTRICAL SAFETY IN THE WORKPLACE" AND OSHA 29 CFR. CONTRACTOR MUST READ SPECIFICATIONS AND INSTALL MATERIAL AS PER SPECIFICATIONS AND/OR PLANS OR AS PER E.P.S. APPROVAL. PLANS AND SPECIFICATIONS ONLY APPLY TO THE PROJECT FOR WHICH THEY WERE CREATED.

ELECTRICAL POWER SYSTEMS INC.
PROFESSIONAL AND CONSULTING ELECTRICAL ENGINEERING
4049 N FRESNO ST, FRESNO, CA 93726
P: (559) 221-7230 F: (559) 221-0507

REGISTERED PROFESSIONAL ENGINEER JOSEPH P. PREVENDAR No. 16581 ELECTRICAL STATE OF CALIFORNIA
DATE: 3-30-17

PLC INPUT/OUTPUT/COMMUNICATION
Construction of 2 Pump Stations
Boys Ranch 2A & Jackson 3A
City of Morgan Hill
Morgan Hill, California

LUHDORFF & SCALMANINI CONSULTING ENGINEERS
500 FIRST STREET
WOODLAND, CALIFORNIA
PHONE: (530) 661-0109

REVISIONS

NO.	DATE	REVISION

DATE: MARCH 2017
JOB NO.: 15-3-053
DESIGN BY:
DRAWN BY:
CHECKED BY:
FILE:

SHEET:
E-6A

CAD FILE: G:/Projects/City of Morgan Hill/15-3-053/Pump Station/Electrical 030917- Jackson/LS174_J-PLC06A.dwg CFG FILE: LSCE2500.PCP_MRG DATE: 03-17-17 9:44am