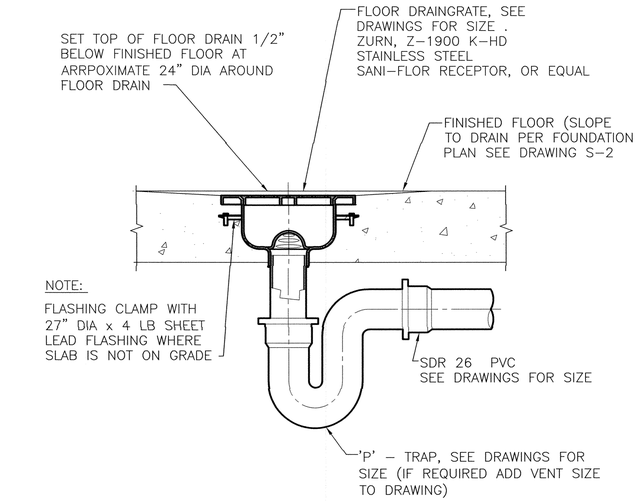

FLOOR DRAIN (A / M-2)
SCALE: NTS

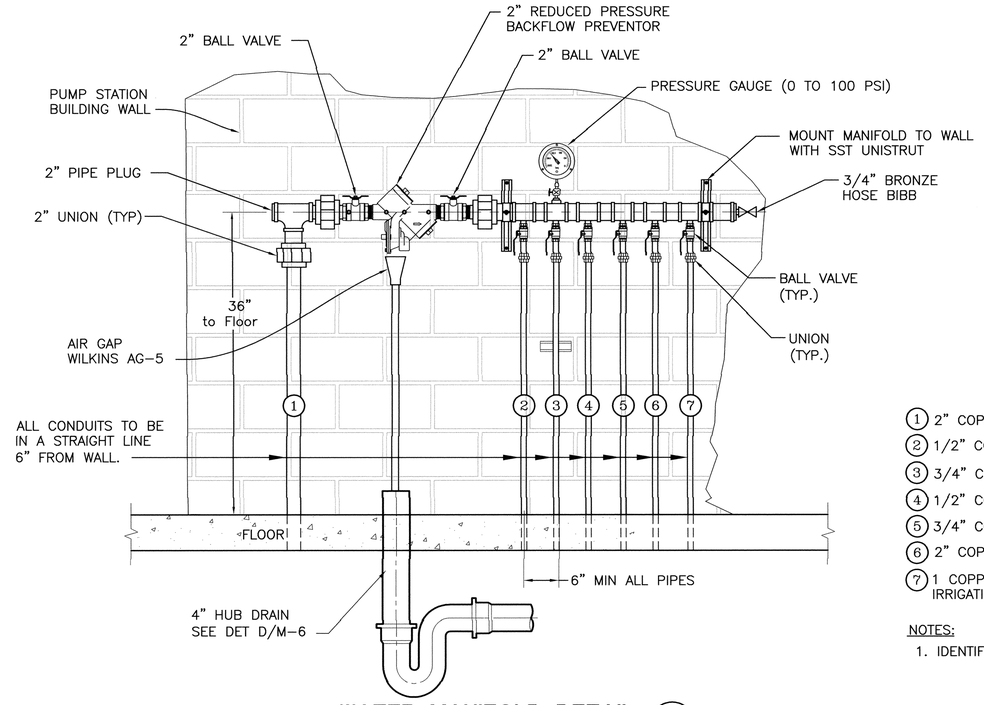

WATER MANIFOLD DETAIL (C / M-2)

1. 2" COPPER WATER SUPPLY LINE
2. 1/2" COPPER SUPPLY LINE FOR PUMP CONTROL VALVE
3. 3/4" COPPER FOR PUMP PRE-LUBE SUPPLY
4. 1/2" COPPER SUPPLY LINE FOR CHEMICAL ROOM SINK
5. 3/4" COPPER SUPPLY LINE FOR HOSE BIBB
6. 2" COPPER SUPPLY LINE FOR EYEWASH STATION
7. 1 COPPER SUPPLY LINE FOR PUMP ROOM HOSE BIBB AND IRRIGATION SYSTEM

NOTES:

1. IDENTIFY AND LABEL ALL PIPING PER SPECIFICATION.

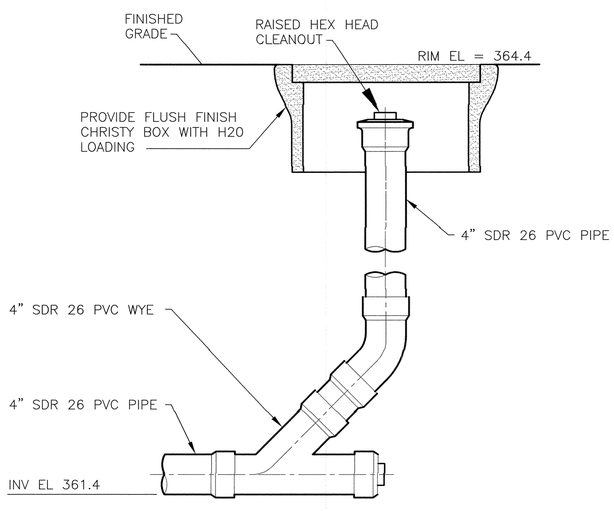

GRADE CLEANOUT (B / C-2)
SCALE: NTS

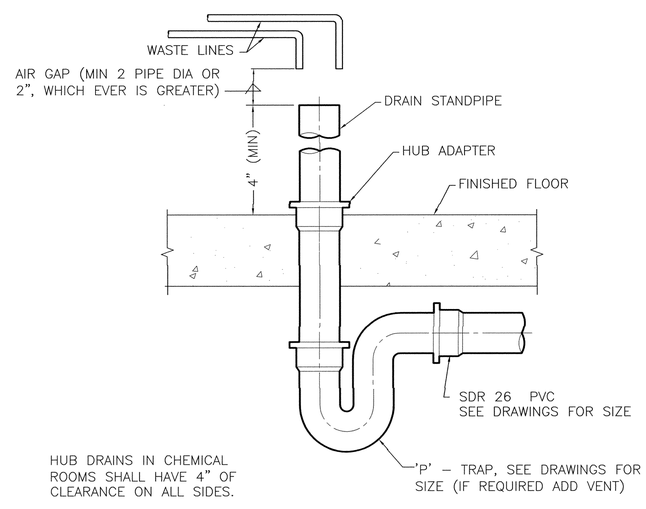

HUB DRAINS IN CHEMICAL ROOMS SHALL HAVE 4" OF CLEARANCE ON ALL SIDES.

HUB DRAIN (D / M-2)
SCALE: NTS

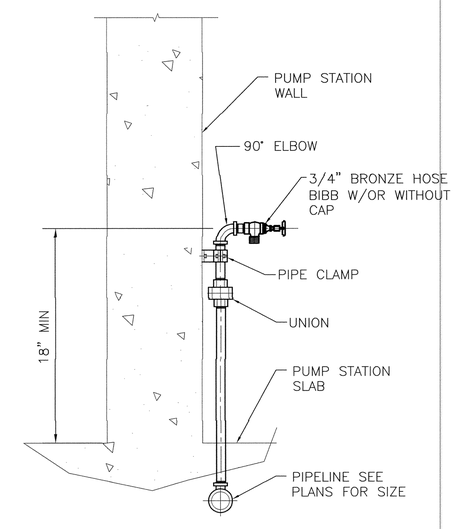

HOSE BIBB DETAIL (E / M-2)
SCALE: NONE

REGISTERED PROFESSIONAL ENGINEER
JASON M. COLEMAN
No. C 78366
Exp. 9/30/2017
05/25/2017
CIVIL
STATE OF CALIFORNIA

MECHANICAL DETAILS III
Construction of Pump Station
East Main Ave. Well No. 1
City of Morgan Hill
Morgan Hill, California

LUHDORFF & SCALMANINI CONSULTING ENGINEERS
500 FIRST STREET
WOODLAND, CALIFORNIA
PHONE: (530) 661-0109

REVISIONS

NO.	DATE	REVISION

DATE: MARCH 2017
JOB NO.: 15-5-068
DESIGN BY: JMC
DRAWN BY: DWT
CHECKED BY: JDF
FILE: M-6.dwg

SHEET:
M-6

CAD FILE: G:/Projects/City of Morgan Hill/15-5-068/Pump Station/M-6.dwg CFG FILE: LSCE2500.PCP_MRG DATE: 05-24-17 9:50am

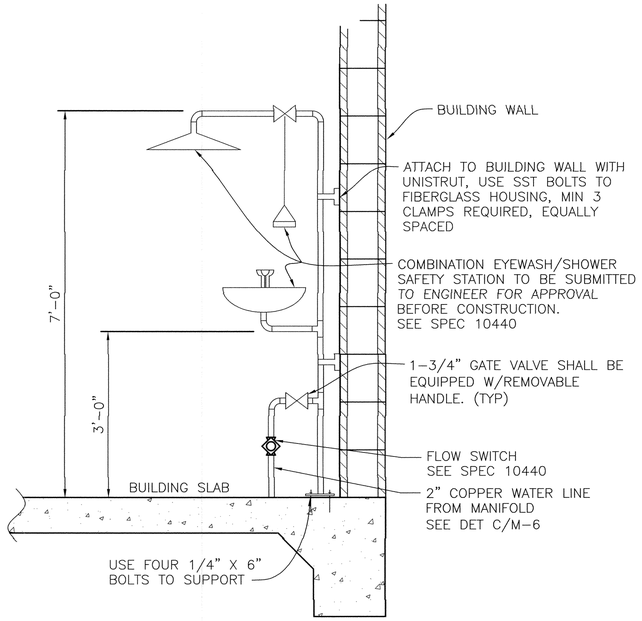

EYEWASH/SHOWER SAFETY STATION (A / M-2)

N.T.S.

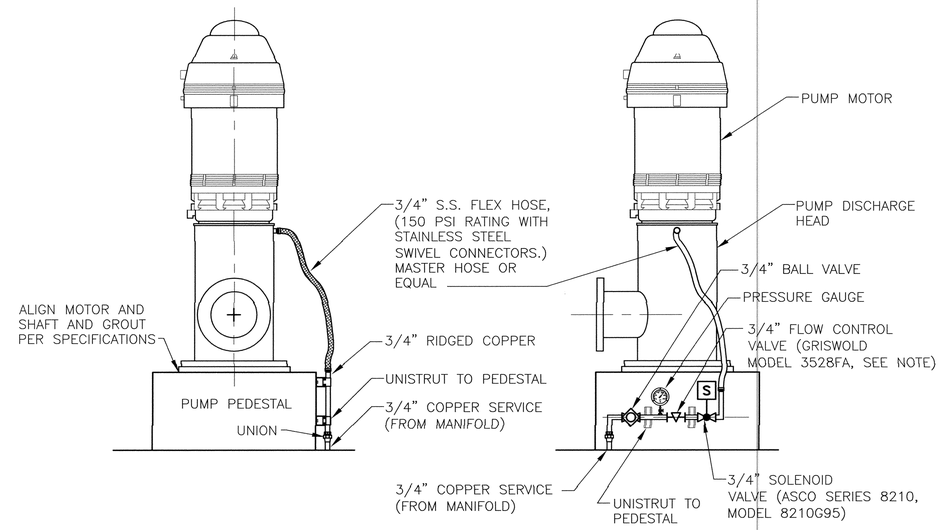

WATER LUBE CONNECTION AT WELL (C / M-1)

NOT TO SCALE

NOTE:

THE CONTRACTOR SHALL VERIFY WATER LUBRICATION, PRESSURE AND FLOW RATE REQUIREMENT WITH PUMP MANUFACTURE.

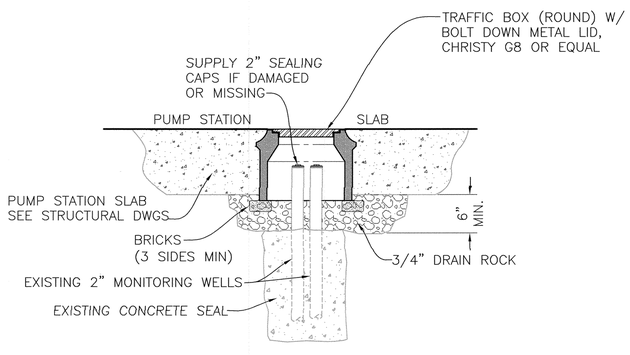

CONSTRUCTION NOTES:

1.) REMOVE THE EXISTING METAL COVERS. CHIP EXISTING CONCRETE SEAL TO 18" BELOW FINISH GRADE. CUT THE EXISTING 2" SCHD. 40 CASING OFF AND REINSTALL SEALING CAPS. PLACE 3/4" X 3/8" DRAIN ROCK, BRICKS AND TRAFFIC BOX AS SHOWN.

ADJUST MONITORING WELLS TO GRADE (D / M-2)

N.T.S.

NOTES:

1. FABRICATED CEMENT MORTOR LINED AND COATED STEEL PIPE AND FITTINGS SHALL BE MINIMUM SCHEDULE 40. ALL STEEL PIPE SHALL BE CEMENT MORTAR LINED IN ACCORDANCE WITH AWWA C205. MINIMUM CEMENT MORTAR COATING THICKNESS SHALL BE 3/4-INCH. ALL LININGS AND COATINGS SHALL BE SHOP APPLIED. FITTINGS SHALL BE MANUFACTURED TO AWWA C208 SPECIFICATIONS.

2. THE ELEVATION (CENTERLINE) OF THE STATION PIPING SHALL BE DETERMINED BY THE DIMENSIONS OF THE PUMP DISCHARGE HEAD THAT IS PROVIDED BY THE PUMP MANUFACTURER.

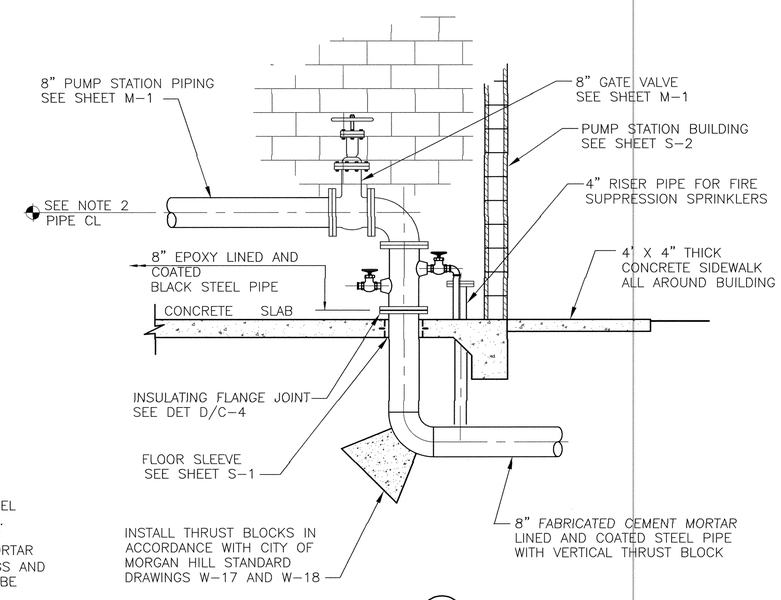

SECTION (1 / M-1)

SCALE: 1/2"=1'-0"

REGISTERED PROFESSIONAL ENGINEER
JASON M. COLEMAN
No. C 78366
Exp. 9/30/2017
05/25/2017
CIVIL
STATE OF CALIFORNIA

MECHANICAL DETAILS IV
Construction of Pump Station
East Main Ave. Well No. 1
City of Morgan Hill
Morgan Hill, California

LUHDORFF & SCALMANINI
CONSULTING ENGINEERS
500 FIRST STREET
WOODLAND, CALIFORNIA
PHONE: (530) 661-0109

REVISIONS

NO.	DATE	REVISION

DATE: MARCH 2017
JOB NO. : 15-5-068
DESIGN BY: JMC
DRAWN BY: DWT
CHECKED BY: JDF
FILE: M-7.dwg

SHEET:
M-7

CAD FILE: G:/Projects/City of Morgan Hill/15-5-068/Pump Station/M-7.dwg CFG FILE: LSCE2500.PCP_MRG DATE: 05-24-17 9:52am

NOTE: ALL FITTINGS TO BE BRASS

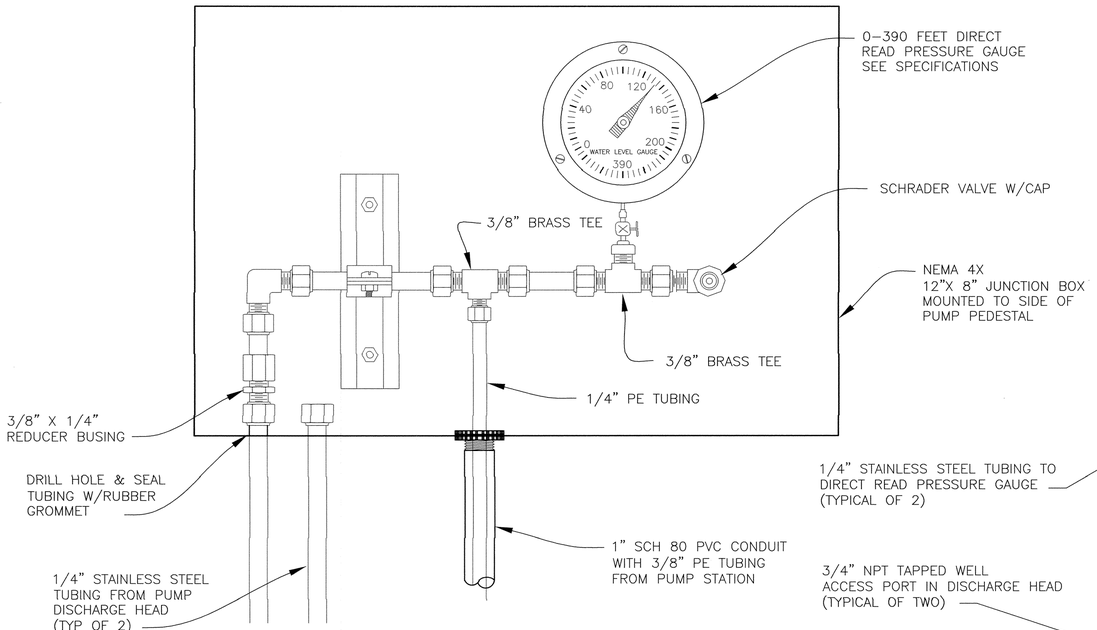

WATER LEVEL READOUT GAUGE DETAIL (A / --)

N.T.S.

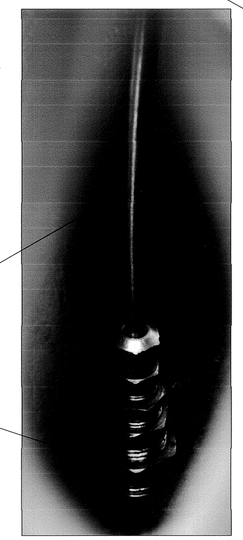

DOWN HOLE AIR LINE ASSEMBLY (E / --)

N.T.S.

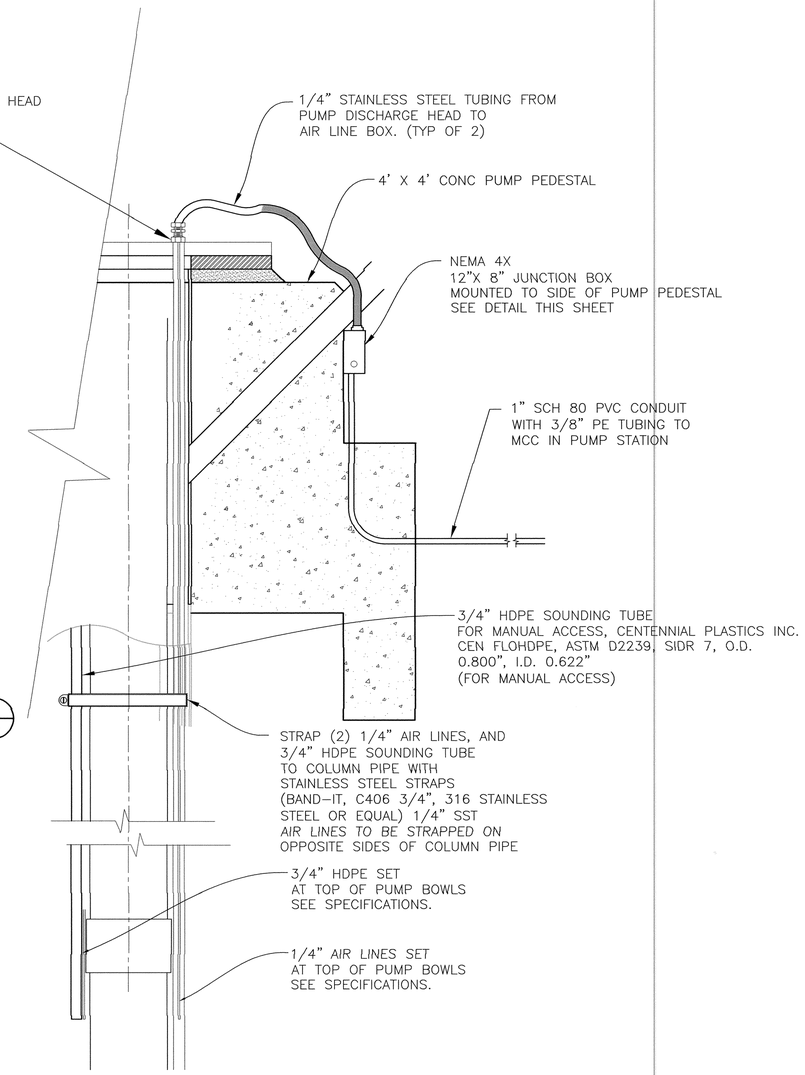

PERMANENT AIR LINE INSTALLATION

DETAIL (D / VAR)

SCALE: NONE

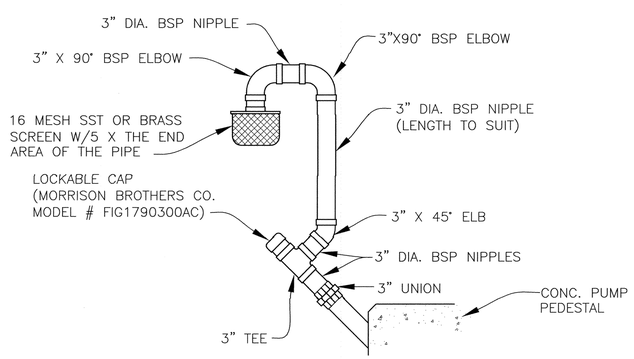

PRODUCTION CASING AIR VENT

DETAIL (B / M-1)

SCALE: NONE

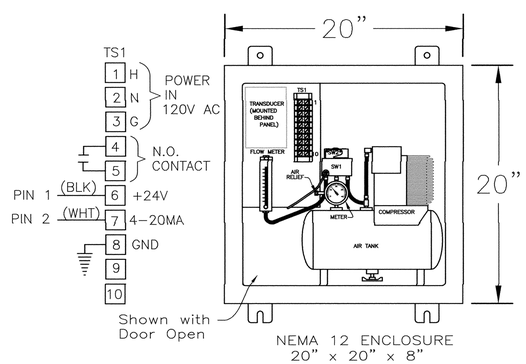

TO BE MOUNTED IN THE MCC

WATER LEVEL MONITOR BOX

DETAIL (C / M-1)

SCALE: NONE

REGISTERED PROFESSIONAL ENGINEER JASON M. COLEMAN No.C 78366 Exp. 9/30/2017 CIVIL STATE OF CALIFORNIA 05/25/2017

MECHANICAL DETAILS V
Construction of Pump Station
East Main Ave. Well No. 1
City of Morgan Hill
Morgan Hill, California

LUHDORFF & SCALMANINI CONSULTING ENGINEERS
500 FIRST STREET
WOODLAND, CALIFORNIA
PHONE: (530) 661-0109

REVISIONS

NO.	DATE	REVISION

DATE: MARCH 2017
JOB NO.: 15-5-068
DESIGN BY: JMC
DRAWN BY: DWT
CHECKED BY: JDF
FILE: M-8.dwg

SHEET:

M-8

CAD FILE: G:/Projects/City of Morgan Hill/15-5-068/Pump Station/M-8.dwg CFG FILE: LSCE2500.PCP_MRG DATE: 05-24-17 9:54am

DESIGN

1. DESIGN AND DETAILS OF CONSTRUCTION SHALL COMPLY WITH THE 2013 EDITION OF THE CALIFORNIA BUILDING CODE AND THE ORDINANCES OF THE LOCAL BUILDING OFFICIAL.

LOADS

1. UNLESS OTHERWISE SHOWN OR NOTED THE UNIT LIVE LOADS FOR DESIGN ARE AS FOLLOWS:

	ROOF
L.L.	20 PSF
D.L.	*13 PSF*

WIND DESIGN:
115 MPH, EXPOSURE B WIND, Iw = 1.15

SEISMIC DESIGN: CATEGORY D, SDS = 1.069
I = 1.5, R = 5, Ss = 1.60, S1 = 0.604

FOOTINGS

1. FOUNDATION SOIL IS NATIVE OR ENGINEERED FILL. SEE SOILS REPORT: BY WALLACE KUHL & ASSOCIATES WKA No. 10817.01 DATED JAN. 22, 2016
2. FOOTINGS SHALL BE TAKEN DOWN TO FIRM UNDISTURBED BEARING. BOTTOMS OF FOOTINGS SHALL BE TAKEN DOWN A MINIMUM OF 18" BELOW EXISTING GRADE OR FINISHED GRADE WHICHEVER IS LOWER.
3. FOOTINGS ARE DESIGNED FOR A MAXIMUM DEAD PLUS LIVE SOIL PRESSURE OF 3,000 PSF DL AND 4,000 PSF TL
4. ELEVATIONS OF BOTTOMS OF FOOTINGS AS SHOWN ON THE PLANS REPRESENT THE ESTIMATED MINIMUM DEPTHS TO *WHICH FOOTINGS MUST BE TAKEN.*
5. BOTTOM OF FOOTINGS SHALL BE LEVEL. CHANGES IN ELEVATION TO BE MADE USING FOOTING STEPS AS SHOWN ON THIS SHEET.

CONCRETE

1. CONCRETE FOR STRUCTURAL SLABS & FOOTINGS SHALL BE DESIGNED AS FOLLOWS:

   STRENGTH: 3,000PSI @ 28 DAYS
   MAX. AGGREGATE SIZE: 1 1/2"

2. CONTRACTOR SHALL PROVIDE CONCRETE MIX DESIGN TO ENGINEER OF RECORD FOR REVIEW & APPROVAL PRIOR TO ORDERING. ALLOW FOR 5 BUSINESS DAYS FOR REVIEW. MIX DESIGN SHALL CONTAIN PAST HISTORY OF 30 BREAKS MIN. AS VERIFICATION OF DESIGN STRENGTH
3. REINFORCING STEEL BE INTERMEDIATE GRADE BILLET STEEL BARS CONFORMING TO A.S.T.M. DESIGNATION AS FOLLOWS:

   A615 GRADE 60

4. AT SPLICES IN HORIZONTAL WALL REINF. STEEL, LAP BARS 32 BAR DIAMETER (1'-0" MIN.) SPLICES IN ADJACENT BARS TO BE STAGGERED 3'-0" MIN. VERTICAL WALL BARS SHALL BE CONTINUOUS WITHOUT SPLICE. BARS MAY BE WIRED TOGETHER AT LAPS OR SPLICES.
5. ALL ANCHOR BOLTS, REGLETS, DOWELS, AND OTHER MISCELLANEOUS ITEMS TO BE CAST IN CONCRETE SHALL BE SECURED IN PLACE IN THE FORMS BEFORE POURING.

MASONRY

1. CONCRETE BLOCK SHALL BE f'm=1,500 PSI GRADE "N" HOLLOW LIGHT WEIGHT CONCRETE BLOCK COMFORMING TO A.S.T.M. DESIGNATION C-90 AND SHALL HAVE A MAX. LINEAR *SHRINKAGE OF 0.06% FROM SATURATED TO OVEN DRY* CONDITION.
2. MORTAR: C.B.C. TYPE "M" CONFORMING TO ASTM C270
   GROUT: 2000 PSI CONFORMING TO ASTM C476
3. USE OPEN END BLOCKS WHERE VERT. REINF. OCCURS, USE BOND BEAM UNITS WHERE HORIZ. REINF. STEEL OCCURS.
4. ALL CELLS CONTAINING VERTICAL AND HORIZONTAL REINFORCING SHALL BE FILLED SOLIDLY WITH GROUT AS A MINIMUM REQUIREMENT AS WELL AS ALL CELLS OF THE BOTTOM COURSE. SEE FOUNDATION PLAN FOR FURTHER GROUT REQUIREMENTS.
5. METAL LATH STRIPS OF EQUAL CELL WIDTH SHALL BE USED AS GROUT STOPS AT THE BOTTOMS OF COURSES TO BE FILLED FOR THE EMBEDMENT OF HORIZ. BARS UNLESS SOLID GROUTING IS SPECIFIED ELSEWHERE IN PLANS. PAPER OR OTHER MATERIAL PRODUCING A SLIP JOINT SHALL NOT BE USED.
6. VERT. REINF. STEEL SHALL EXTEND FULL HEIGHT OF WALL OR PARTITION WITHOUT SPLICE. VERT. REINF. STEEL SHALL BE ACCURATELY PLACED AND HELD IN POSITION IN THE CENTER OF THE WALL OR PARTITION
7. BLOCK SHALL BE LAID IN RUNNING BOND.
8. PROVIDE VERTICAL CONTROL JOINTS @ 20-0" O.C. MAX. SEE DET. THIS SHEET FOR NOTES AND ELEVATIONS..
9. DOWEL OR VERTICAL BARS SHALL BE LAPED A MIN. OF 48d HORIZONTAL BARS SHALL BE LAPED A MIN. OF 36" AND BE STAGGERED A MIN. OF 48"

DEFERRED SUBMITTALS

ROOF WOOD TRUSS CALCULATIONS ARE TO BE SUBMITTED AS A DEFERRED SUBMITTAL SHOP DRAWING PACKAGE TO THE OWNER A MINIMUM OF 3 WEEKS PRIOR TO FABRICATION. SUBMITTED PACKAGE SHALL BE REVIEWED & APPROVED BY STRUCTURAL ENGINEER OF RECORD

TIMBER

1. STRUCTURAL FRAMING LUMBER-
   S4S DOUGLAS FIR GRADED IN ACCORDANCE WITH THE STANDRAD GRADING RULES NO. 16 OF THE W.C.L.I.B.
2. GRADES SHALL BE AS FOLLOWS EXCEPT AS NOTED ON DRAWINGS:
   BEAMS AND STRINGERS-
   GREATER THAN 6" THICK---------NO. 1
   POST AND TIMBERS-
   GREATER THAN 6" THICK---------NO. 1
   JOIST AND PLANK-
   TO 4" THICK AND TO 14" WIDE----NO. 1
   BLOCKING AND BRIDGING-
   2" THICK----------NO. 2
   2 X 4 STUDS---------- STUD OR BETTER
   2 X 6---------- 2
3. STRUCTURAL PLYWOOD-COMPLY WITH U.S. PRODUCTS STANDARD PS 1-95
   ROOF PW SHALL BE 19/32" STRUCTURAL 1 OR C-D INTERIOR WITH EXTERIOR GLUE
4. *ALL PW CALLED ON STRUCTURAL DRWGS IS* STRUCTURAL PW. SEE PLYWOOD SHEATHING DETAIL THIS SHEET FOR TYPICAL LAYOUT & NAILING.
5. SILL PLATE SHALL BE PRESSURE TREATED DOUGLAS FIR
6. JOIST HANGERS AND MISC. HARDWARE CALLED FOR ON PLANS REFER TO STRONG TIE AS MANUFACTURED BY THE SIMPSON COMPANY. HARDWARE OF EQUAL STRENGTH MAY BE USED WITH ENGINEER'S APPROVAL.
7. BOLTS, LAG SCREWS, CARRIAGE BOLTS, AND WASHERS:
   A. ALL BOLTS *FOR TIMBER CONNECTIONS* SHALL BE MACHINE BOLTS EXCEPT AS NOTED. BOLT HOLES SHALL BE 1/16" LARGER THAN THE NOMINAL BOLT DIAMETER. ALL BOLTS MUST BE PULLED UP TIGHT ON INSTALLATION AND RETIGHTENED BEFORE CLOSING IN WITH FINISH MATERIAL.
   B. HOLES FOR LAG SCREWS SHALL BE BORED THE SAME DEPTH AND NOMINAL DIAMETER AS THE SHANK. HOLES FOR THE THREADED PORTION SHALL BE NO LARGER THAN THE ROOT DIAMETER OF THE THREADS.
8. A. PROVIDE SOLID BLOCKING BETWEEN RAFTERS OR JOISTS AT ALL SUPPORTS.
9. NAILING SHALL COMPLY WITH TABLE 2304.9.1 OF THE CBC ALL NAILS CALLED ON PLANS ARE COMMON OR GAL. BOX NAILS, UNLESS NOTED.
10. MEMBERS SHALL BE SUB-BORED WHEN NAILS TEND TO SPLIT THEM
11. APPLICATION OF WOOD PRESERVATIVES SHALL BE IN ACCORDANCE WITH MANUFACTURER'S RECOMMMENDATIONS.
12. *MANUFACTURED JOISTS AND TRUSSES (DEFERRED APPROVAL)*

    GANGNAIL TRUSS: SUPPLIED BY AN APPROVED METAL PLATE TRUSS MANUFACTURER. WOOD TRUSS SHALL CONFORM TO CBC 2303.4.6. SUPPLY I.C.B.O. RESEARCH REPORT ON LIGHT METAL PLATES.

13. MINIMUM TRUSS DESIGN SHALL BE AS FOLLOWS:

WOOD TRUSS		METAL TRUSS	
L.L.	20 PSF	L.L.	20 PSF
D.L.	13 PSF	D.L.	10 PSF

MISCELLANEOUS

1. DETAILS NOT SPECIFICALLY SHOWN CONFORM IN GENERAL WITH DETAILS OF SIMILAR CONSTRUCTION SHOWN ELSEWHERE ON PLANS.
2. FOR SIZE AND LOCATION OF OPENINGS, DUCTS AND PIPES SEE ARCHITECTURAL AND MECHANICAL DRAWINGS
3. NOTE REMOVED
4. NO CONDUITS OR PIPES SHALL BE EMBEDDED IN CONCRETE SLABS, BEAMS, GIRDERS, COLUMNS, ETC. UNLESS SPECIFICALLY APPROVED BY THE ARCHITECT OR ENGINEER.
5. WEDGE ANCHORS IN CONCRETE SHALL BE 'WS' RED HEAD BY PHILLIPS AND SHALL COMPLY WITH I.C.B.O. REPORT NO. 1372 OR EQUAL.
6. *IN GENERAL, THE WORKING DETAILS WILL INDICATE DIMENSIONS* POSITION, AND KIND OF CONSTRUCTION, AND THE SPECIFICATIONS, QUALITIES, AND METHODS. ANY WORK INDICATED ON THE WORKING DETAILS AND NOT MENTIONED ON THE SPECIFICATIONS OR VICE VERSA, SHALL BE FURNISHED AS THOUGH FULLY SET FORTH IN BOTH. WORK NOT PARTICULARLY DETAILED, MARKED OR SPECIFIED, SHALL BE THE SAME AS SIMILAR PARTS THAT ARE DETAILED, MARKED OR SPECIFIED. IF CONFLICTS OCCUR BETWEEN DRAWINGS AND SPECIFICATIONS, THE MOST EXPENSIVE MATERIALS OR METHODS WILL PREVAIL.
7. THE CONTRACTOR SHALL NOTIFY THE ARCHITECT OR STRUCTURAL ENGINEER WHERE A CONFLICT OR DISCREPANCY OCCURS BETWEEN THE STRUCTURAL DRWGS AND ANY OTHER PORTION OF THE CONTRACT DOCUMENTS OR EXISTING FIELD CONDITIONS. SUCH NOTIFICATION SHALL BE GIVEN IN DUE TIME SO AS NOT TO AFFECT THE CONSTRUCTION SCHEDULE. IN CASE OF A CONFLICT BETWEEN STRUCTURAL DRWGS AND SPECIFICATIONS THE THE MORE RESTRICTIVE CONDITION SHALL TAKE PRECEDENCE UNLESS WRITTEN APPROVAL HAS BEEN GIVEN FOR THE LEAST RESTRICTIVE. CONTRACTOR SHALL VERIFY ALL DIMENSIONS WITH "C" SHEETS *PRIOR TO COMMENCING ANY WORK*
8. DO NOT SCALE DRAWINGS. CONTACT THE ARCHITECT OR STRUCTURAL ENGINEER FOR ANY DIMENSIONS NOT SHOWN.
9. THESE DRAWINGS ARE NOT COMPLETE UNTIL REVIEWED AND ACCEPTED BY LOCAL BUILDING OFFICIALS AND SIGNED BY THE OWNER AND THE STRUCTRUAL ENGINEER.
10. CONTRACTOR TO VERIFY ALL DIMENSIONS.

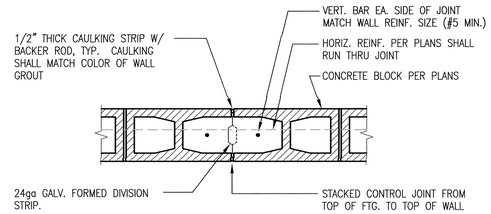

TYP. CMU CONTROL JOINT

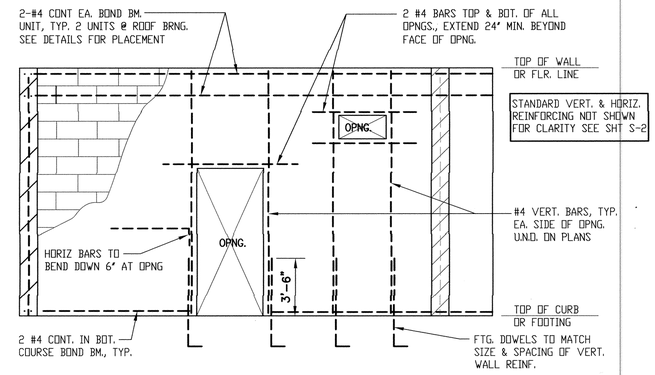

MASONRY DETAILS

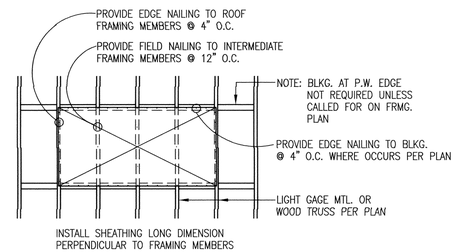

ROOF DIAPHRAGM NAILING:

LIGHT GAGE MTL. TRUSS FRMG.: PASLODE PNEUMATIC FASTNERS SPACED AS SHOWN ABOVE. FASTNERS TO BE 1-3/4" LONG x 0.120" DIA., ZINC PLATED W/ CHROMATE FINISH

WOOD TRUSS FRMG.: 8d COMMON NAILS SPACED AS SHOWN ABOVE

NOTE: MINIMUM PERMISSABLE NAILING SHOWN HERE. AREAS REQUIRED NAILING IN EXCESS OF THIS ARE SHOWN ON PLAN.

TYP PLYWOOD ROOF DIAPHRAGM

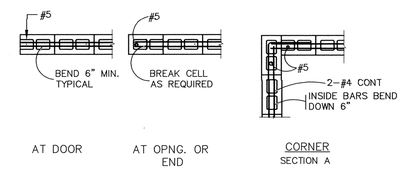

MASONRY DETAILS

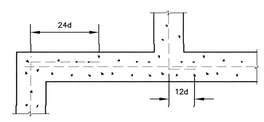

REINFORCING BAR SPLICES

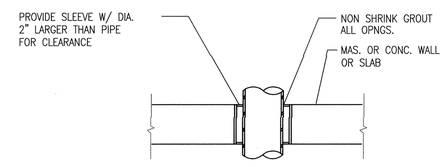

TYP. PIPE PENETRATION

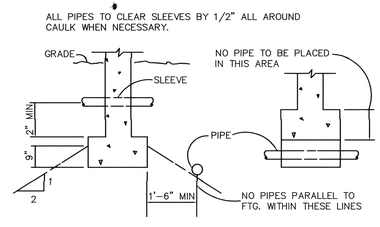

PIPES IN FOOTINGS

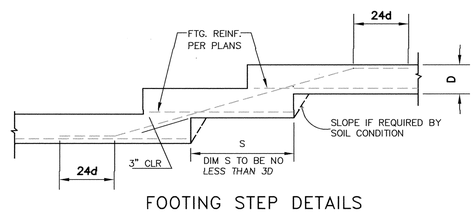

FOOTING STEP DETAILS

REGISTERED PROFESSIONAL ENGINEER WILLIAM H MORGAN NO. 1993 STRUCTURAL STATE OF CALIFORNIA LICENSE FEE DUE 9-30-17

GENERAL NOTES & DETAILS
Construction of Pump Station
East Main Ave. Well No. 1
City of Morgan Hill
Morgan Hill, California

LUHDORFF & SCALMANINI CONSULTING ENGINEERS

REVISIONS

NO.	DATE	REVISION

DATE: MARCH 2017
JOB NO. : 15-5-068
DESIGN BY: WHM
DRAWN BY: WHM
CHECKED BY: WHM
FILE:S-1.dwg

S-1

CAD FILE: G:/Projects/City of Morgan Hill/15-5-068/Structural 121416/16030-S1.dwg CFG FILE: LSCE2500.PCP_MRG DATE: 03-15-17 8:23am

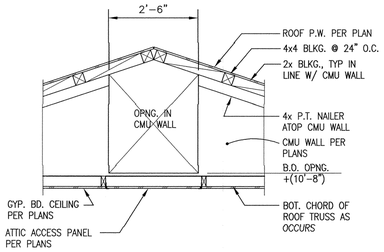

A REMOVABLE ROOF LIFT POINT
1-1/2"=1'-0"

SHEET NOTES

1. 19/32" CDX OR OSB ROOF SHEATHING W/ 8d @ 6" O.C. EDGE, 12" O.C. FIELD NAILING.
2. NOT USED
3. 48" SQ. CLEAR OPENING IN ROOF FRAMING TO ALIGN WITH PUMP PEDESTAL BELOW. SHAFT OF THE SKYLIGHT SHALL BE LINED WITH FIRE RETARDANT PLYWOOD PAINTED WHITE TO MATCH THE ADJACENT GYPSUM CEILING.
4. LOW PROFILE ROOF VENT OF STYLE & MANUF. TO BE APPROVED BY OWNER. TYP. OF 4 AS SHOWN W/ 100 SQ. IN. FREE AIR FLOW PER VENT. 4 TOTAL
5. TOP CHORD TRUSS CONN. PLATES SHALL BE CAPABLE OF TRANSFERING 2,500 LB MIN. TENSION OR COMPRESSION ACROSS MEMBER SPLICE
6. 3"x22" MIN. SCREENED ATTIC VENT BTWN. TRUSSES AT EAVE, TYP. AS SHOWN ON FRMG. PLAN
7. 12"Wx48"H ACOUSTICAL LOUVER IN CMU WALL. SEE EXTERIOR ELEVATIONS FOR POSITION ON WALL. SEE SPECS FOR MANUF. & MODEL NO.
8. 14" SQ. OPNG. IN CMU WALL ABOVE FOR WALL FAN PER SPECS. CONTRACTOR SHALL VFY. OPNG. SIZE
9. 22 1/2"x 36" ATTIC ACCESS PANELS W/ TRIM
10. EMERGENCY EYEWASH/SHOWER STATION PER SPECIFICATIONS.
11. 24"x36" VANITY W/ SELF RIM SINK, PER SPECIFICATIONS.
12. 3'-6" SQ. x 1'-6" DP SUMP PIT. PROVIDE FIBERGLASS EMBED ANGLE AROUND PERIMETER FOR SUPPORT OF FIBERGLASS GRATE RATED FOR COMMERCIAL LOADING AT 3'-6" SPAN. SEE DET. E/S3
13. SECUITY SCREEN SEE DETAIL D/S5
14. 4'-0" SQ. CONCRETE PUMP MOUNTING PEDESTAL. T.O. PEDESTAL SHALL BE 18" ABOVE FIN. SLAB LEVEL. ISOLATE FROM BLDG. SLAB VIA 1/2" EXPANSION JOINT MATERIAL PER DETAIL. SEE MECHANICAL/CIVIL DRAWINGS
15. CHEMICAL PUMP CONTAINMENT SHELF AS DETAILED IN "M" SHTS.
16. BLOWER PER SPECS W/ 8" VENT PIPE PENETRATION THRU ROOF, SEE EXTERIOR ELEVATIONS.
17. 2'-8" SQ. x 2" DP. RECESSED SLAB FOR FLUSH INSTALLATION OF HYPOCHLORITE DRUM SCALE PER SPECS.
18. DBL. METAL TRUSS, SEE SHT. S-5 FOR TYP. TRUSS NOTES.
19. MTL. STUD BLKG. PER B/S-5
20. 3'-0"x2'0" WIRE MESH WINDOW PER SPECS. INSTALL W/ BOTTOM OF OPENING +(4'-0") FROM TOP OF SLAB
21. ROOF SHEATHING IN THIS AREA SHALL BE BLOCKED ALL EDGES WITH 10d @ 3" O.C. EDGE NAILING, 6" O.C. FIELD NAILING. BLOCKING SHALL BE 2x4 FLAT. 2x4 SHALL BE SISTERED TO TOP CHORD OF TRUSS W/ 16d @ 4" O.C. STAGGERED WHERE P.W. EDGE OCCURS. EDGE NAILING SHALL THEN BE STAGGERED BACK & FORTH BTWN. MEMBERS.
22. *EYEBOLT FOR ROOF REMOVAL, SEE DET. C/S5* LOCATE MIDSPAN BTWN. TRUSSES.
23. 4x4 BLKG. @ 24" O.C. OVER CMU WALL W/ (2) L70 CLIPS TO 4x CMU NAILER
24. 30" WIDE OPENING IN CMU WALL ABOVE CEILING LEVEL FOR ATTIC ACCESS. SEE DET. A/S2
25. 1/2" BOLTED CONNECTION BETWEEN STATIONARY & REMOVABLE ROOF TRUSS, TYP. OF 4 AS SHOWN TO BOTH TOP & BOTTOM CHORDS OF TRUSS (8 BOLTS TOTAL EACH SIDE OF REMOVABLE ROOF SECTION SEE DETAILS D&E/S3
26. BUILT-UP LIGHT GUAGE REMOVABLE METAL HEADER, TYP. SEE DET. E/S-5
27. NOT USED
28. 7'-0" x 9 GA CHAINLINK FENCE W/ 48" WIDE GATE
29. NOT USED

TYP. CONC. SLAB:
6" CONC. W/ #4 @ 16" O.C. EA. WAY AT MID-DEPTH, OVER 2" SAND OVER 6 MIL WPM OVER 4" CRUSHED ROCK SLOPE TO DRAINS AS REQ'D. (1/8":12 MIN.)

WALL LEGEND	
	8" SOLID GROUTED CMU BLOCK W/ #5 VERT. BARS @ 24" O.C. & #4 HORIZ. BARS @ 24" O.C.

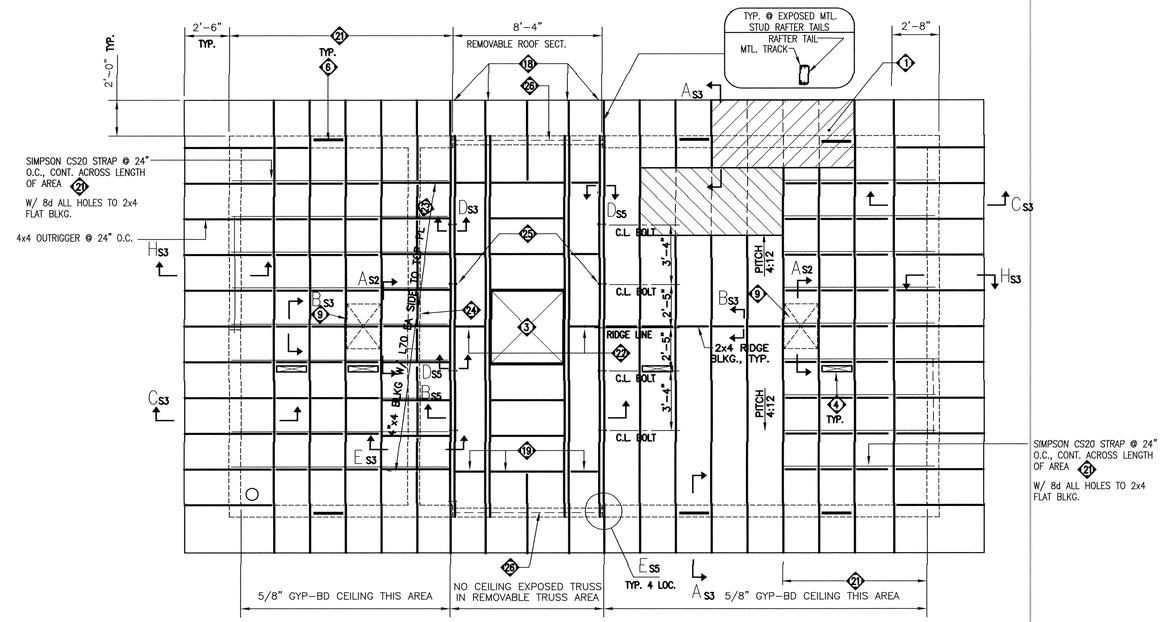

FOUNDATION PLAN
1/4"=1'-0"

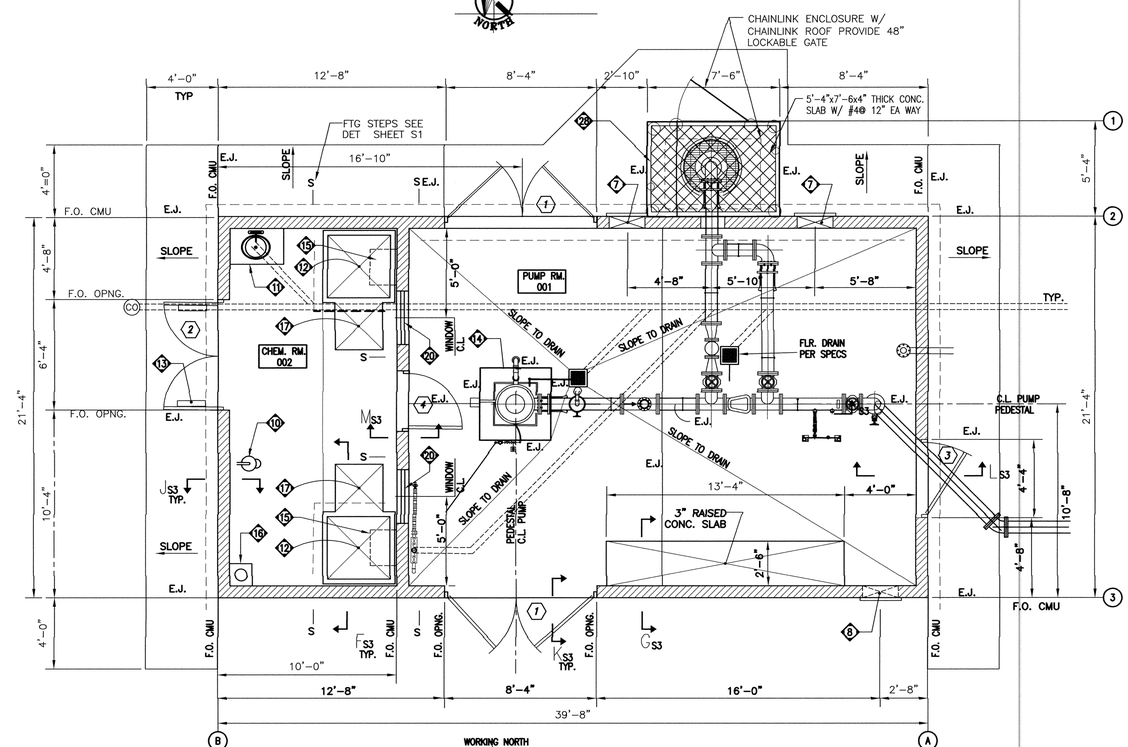

FOUNDATION PLAN
1/4"=1'-0"

REGISTERED PROFESSIONAL ENGINEER WILLIAM H MERRIFIELD NO. 1993 STRUCTURAL STATE OF CALIFORNIA LICENSE FEE DUE 9-30-17

FOUNDATION & ROOF FRAMING PLANS
Construction of Pump Station
East Main Ave. Well No. 1
City of Morgan Hill
Morgan Hill, California

LUHDORFF & SCALMANINI CONSULTING ENGINEERS

REVISIONS

NO.	DATE	REVISION

DATE: MARCH 2017
JOB NO.: 15-5-068
DESIGN BY: WHM
DRAWN BY: WHM
CHECKED BY: WHM
FILE: S-2.dwg

S-2

CAD FILE: G:/Projects/City of Morgan Hill/15-5-068/Structural 121416/16030-S2.dwg CFG FILE: LSCE2500.PCP_MRG DATE: 05-24-17 10:04am

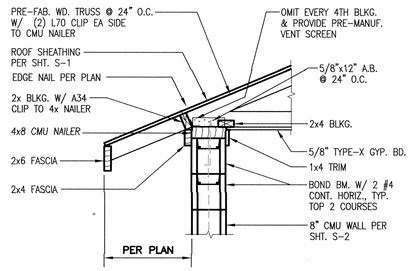

A 3/4"=1'-0"

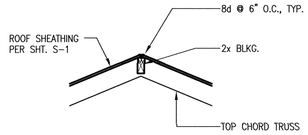

B 3/4"=1'-0"

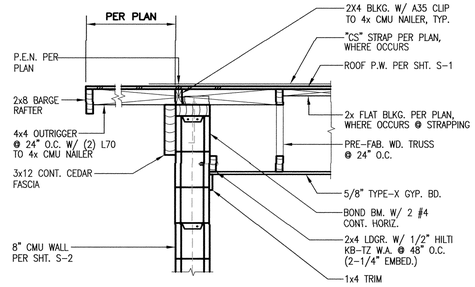

C 3/4"=1'-0"

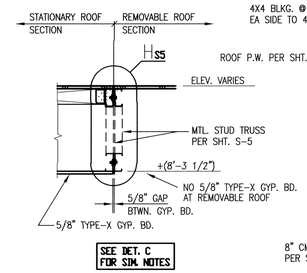

D 3/4"=1'-0"

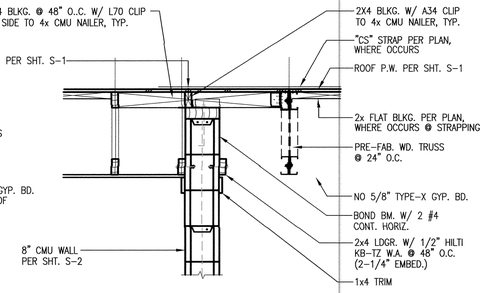

E 3/4"=1'-0"

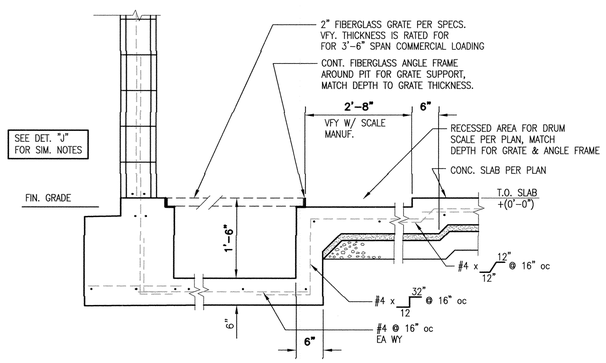

F 3/4"=1'-0"

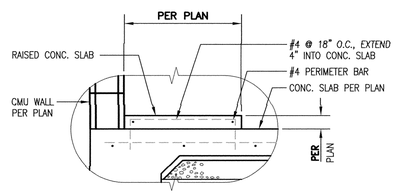

G 3/4"=1'-0"

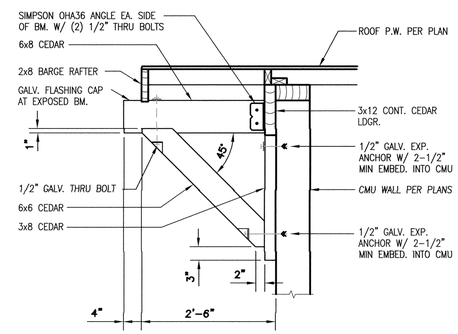

H 3/4"=1'-0"

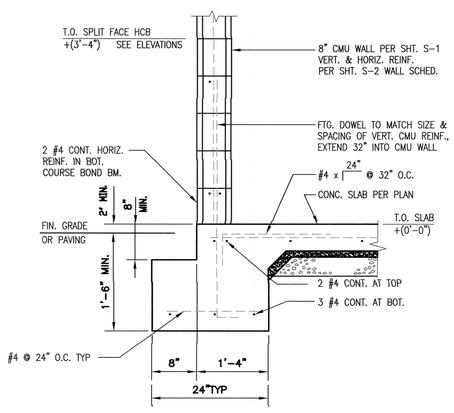

J 3/4"=1'-0"

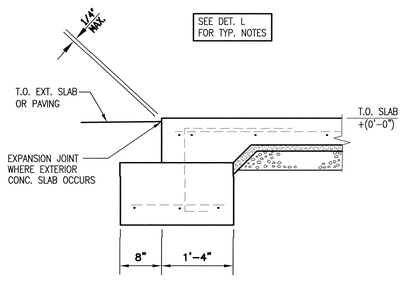

K 3/4"=1'-0"

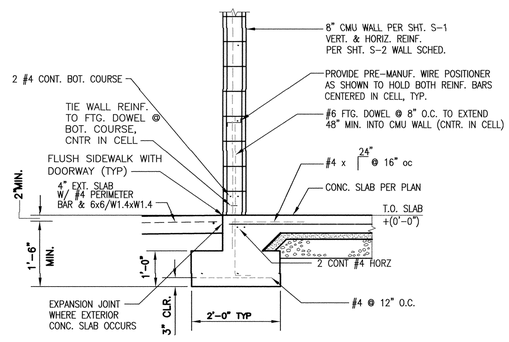

L 1/2"=1'-0"

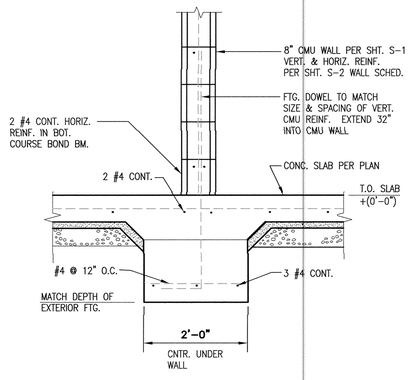

M 3/4"=1'-0"

REGISTERED PROFESSIONAL ENGINEER WILLIAM H MORAN NO. 1993 STRUCTURAL STATE OF CALIFORNIA LICENSE FEE DUE 6-30-17

DETAILS
Construction of Pump Station
East Main Ave. Well No. 1
City of Morgan Hill
Morgan Hill, California

LUHDORFF & SCALMANINI CONSULTING ENGINEERS

REVISIONS		
NO.	DATE	REVISION

DATE: DECEMBER 2016
JOB NO.: 15-5-068
DESIGN BY: WHM
DRAWN BY: WHM
CHECKED BY: WHM
FILE: S-3.dwg

S-3

CAD FILE: G:/Projects/City of Morgan Hill/15-5-068/Structural 121416/16030-S3.dwg CFG FILE: LSCE2500.PCP_MRG DATE: 05-24-17 10:08am

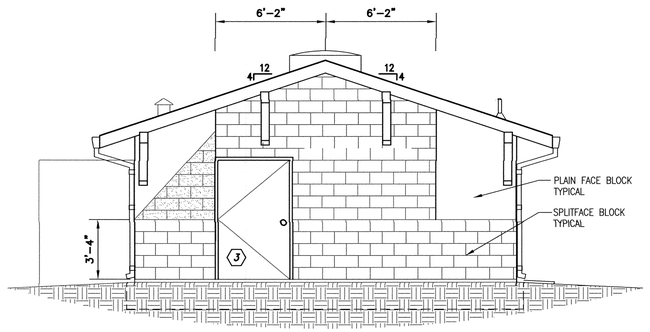

EAST EXTERIOR ELEVATION
SCALE: 1/4"=1'-0"

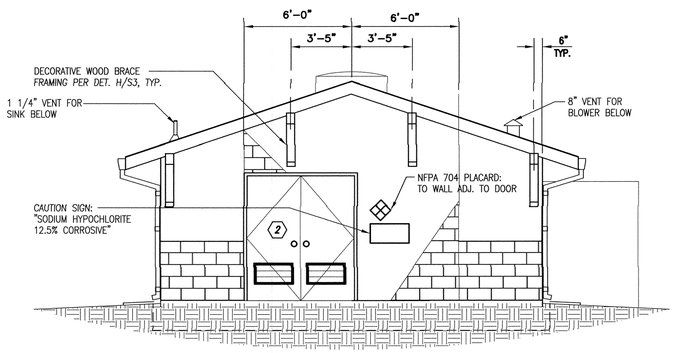

WEST EXTERIOR ELEVATION
SCALE: 1/4"=1'-0"

DOOR SCHEDULE

DOOR NO.	DOORS TYPE	WIDTH	HEIGHT	THICKNESS	MATERIAL	FINISH	SINGLE	PAIR	SOLID	HOLLOW	DOUBLE-ACTING	WINDOW	LOUVER	SECURITY SCREEN	INSULATED	FRAMES MATERIAL	FINISH	HEAD	JAMB	LABEL ASSEMBLY	
1	D	4'-0"	7'-0"	1.75"	MTL.	PNT.		●		●					●	MTL.	PNT.				
2	C	3'-0"	7'-0"	1.75"	MTL.	PNT.		●		●			●	●		MTL.	PNT.				
3	C	4'-0"	7'-0"	1.75"	MTL.	PNT.	●			●						MTL.	PNT.				
4	B	3'-0"	7' 0"	1.75"	MTL.	PNT.	●			●		●	●			MTL.	PNT.				

DOOR ELEVATIONS

DOOR TYPES

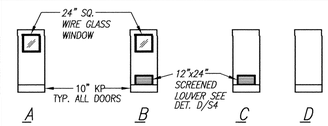

KP – MTL. KICKPLATE

EXTERIOR FINISH SCHEDULE

	MATERIAL & REMARKS	COLOR
ROOFING	COMP SHINGLES PER SPECS	PER OWNER
WALLS	8"x8"x16" SMOOTH FACE CONC. BLOCK	PER OWNER
BRICK VENEER	4"x8"x16" SPLIT FACE	PER OWNER
WALL PANELS ABOVE DOOR AT REMOVABLE ROOF	18ga BOX RIB METAL PANELS AS MANUF. BY "AEP SPAN", FONTANA, CA (800) 272-2466	PER OWNER MATCH MISC. METAL TRIM
TRIM	PAINT ALL METAL DOORS, DOOR FRAMES, LOUVERS, ROOF VENTS & WALL FANS MATCHING COLORS	PER OWNER
BUILDING OCCUPANCY: 1 PERSON, 1 HR PER DAY		

INTERIOR FINISH SCHEDULE

ROOM NO.	ROOM NAME	FLOOR	WALL MATERIALS N	S	E	W	WALL FINISH	CEILING
001	PUMP ROOM	1, 2	3	3	3	3	5	4, 5
002	CHEM. ROOM	1, 2	3	3	3	3	6	4, 6

MATERIAL & FINISH NOTES

1. BROOM FIN. CONC. SLAB
2. NON-SKID EPOXY COATING
3. CONC. MASONRY UNIT
4. 5/8" TYPE "X" GYP. BD. TAPE, TEXTURE & PAINT
5. SEMI-GLOSS EPOXY
6. SEMI-GLOSS EPOXY PAINT FOR CHEM. EXPOSURE
7. GLOSS EPOXY

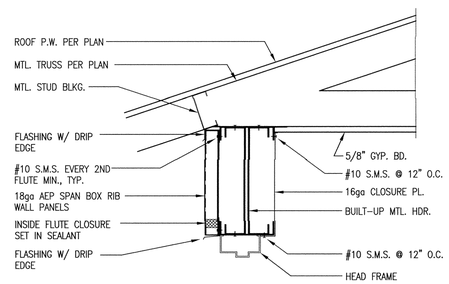

A SECT. @ EAVE
N.T.S.

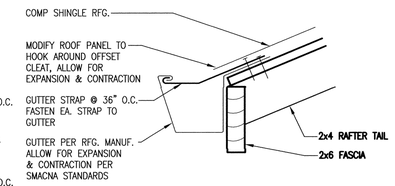

B SECT. @ EAVE
N.T.S.

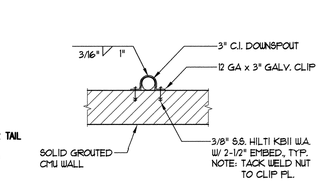

C SECT. @ DOWNSPOUT
N.T.S.

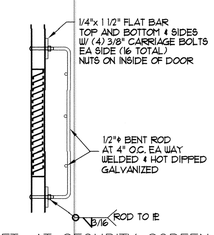

D DET. AT SECURITY SCREEN
3/4"=1'-0"

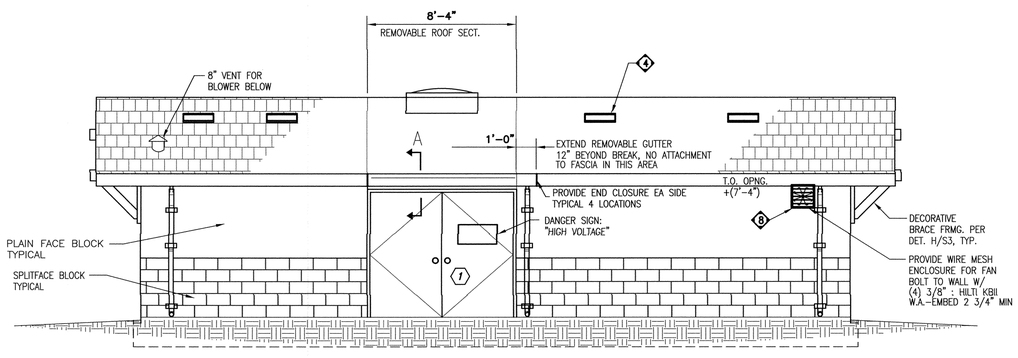

SOUTH EXTERIOR ELEVATION
SCALE: 1/4"=1'-0"

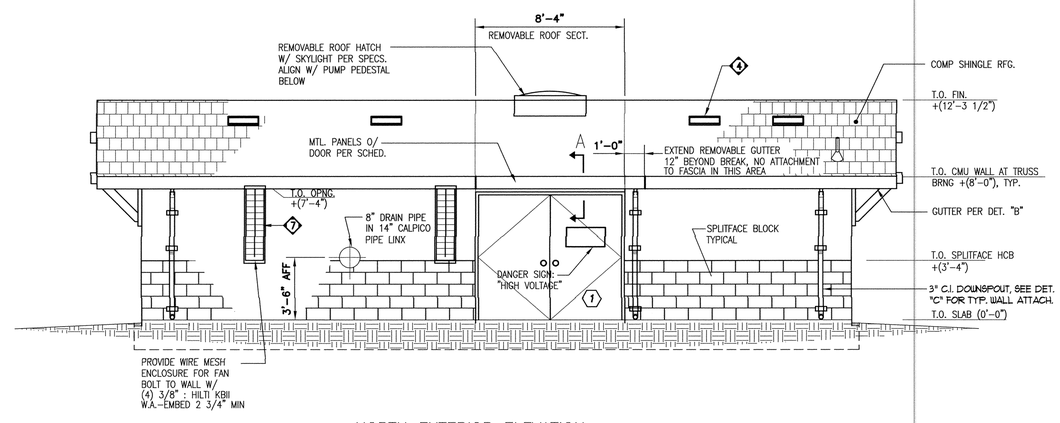

NORTH EXTERIOR ELEVATION
SCALE: 1/4"=1'-0"

REGISTERED PROFESSIONAL ENGINEER
WILLIAM H MORGAN
NO. 1993
STRUCTURAL
STATE OF CALIFORNIA
LICENSE FEE DUE 9-30-17

EXTERIOR ELEVATION & SCHEDULES
Construction of Pump Station
East Main Ave. Well No. 1
City of Morgan Hill
Morgan Hill, California

LUHDORFF & SCALMANINI
CONSULTING ENGINEERS

REVISIONS

NO.	DATE	REVISION

DATE:DECEMBER 2016
JOB NO.: 15-5-068
DESIGN BY: WHM
DRAWN BY: WHM
CHECKED BY:WHM
FILE: S-4.dwg

S-4

CAD FILE: G:/Projects/City of Morgan Hill/15-5-068/Structural 121416/16030-S4.dwg CFG FILE: LSCE2500.PCP_MRG DATE: 05-24-17 10:10am