SPECIFICATION and CONTRACT DOCUMENTS

FOR

Morgan Hill Library Addition Project

CITY OF MORGAN HILL

MORGAN HILL, CALIFORNIA
PUBLIC WORKS DEPARTMENT

PREPARED BY

ENGINEERING DEPARTMENT

JUNE 2019

NOTICE INVITING BIDS

1. **Bid Acceptance.** The City of Morgan Hill ("City"), will accept sealed bids for its Morgan Hill Library Addition ("Project"), by or before August 8, 2019, at 2:30 p.m., at its DEVELOPMENT SERVICES CENTER, located at 17575 PEAK AVENUE MORGAN HILL, California, at which time the bids will be publicly opened and read aloud.

2. **Project Information.**

   2.1 Location and Description. The Project is located at 660 W. Main Avenue, Morgan Hill, CA 95037, and the Scope of Work is described as follows:
   Construction of addition to existing library and expansion of utilities and fire sprinkler system into addition.

   2.2 Time for Completion. The planned timeframe for commencement and completion of construction of the Project is: 270 Calendar Days

3. **License and Registration Requirements.**

   3.1 License. This Project requires a valid California contractor's license for the following classification(s): Class B.

   3.2 DIR Registration. City will not accept a Bid Proposal from or enter into the Contract with a bidder, without proof that the bidder and its Subcontractors are registered with the California Department of Industrial Relations ("DIR") to perform public work under Labor Code Section 1725.5, subject to limited legal exceptions.

4. **Contract Documents.** The plans, specifications, bid and contract documents for the Project ("Contract Documents") may be obtained from the City of Morgan Hill, at 17575 Peak Avenue, Morgan Hill, CA, (408) 778-6480. **Electronic copies of the Contract Documents are available on CD for ten dollars ($25.00). If mailing by USPS, a five-dollar ($5.00) charge will be added. To download plans and specifications at no charge, register at www.publicpurchase.com.**

5. **Bid Proposal and Security.**

   5.1 Bid Proposal Form. Each Bid must be submitted using the Bid Proposal form provided with the Contract Documents.

5.2 Bid Security. The Bid Proposal must be accompanied by bid security of ten percent (10%) of the maximum bid amount, in the form of a cashier's or certified check made payable to City of Morgan Hill, or a bid bond executed by a surety licensed to do business in the State of California on the Bid Bond form included with the Contract Documents. The bid security must guarantee that upon award of the bid, the bidder will execute the Contract and submit payment and performance bonds and insurance certificates as required by the Contract Documents within ten (10) days after issuance of the notice of award.

6. Prevailing Wage Requirements.

6.1 General. This Project is subject to the prevailing wage requirements applicable to the locality in which the Work is to be performed for each craft, classification or type of worker needed to perform the Work, including employer payments for health and welfare, pension, vacation, apprenticeship and similar purposes.

6.2 Rates. These prevailing rates are available online at http://www.dir.ca.gov/DLSR. Each Contractor and Subcontractor must pay no less than the specified rates to all workers employed to work on the Project. The schedule of per diem wages is based upon a working day of eight (8) hours. The rate for holiday and overtime work must be at least time and one-half (1/2).

6.3 Compliance. The Contract will be subject to compliance monitoring and enforcement by the California Department of Industrial Relations, under Labor Code Section 1771.4.

7. Performance and Payment Bonds. The successful bidder will be required to provide performance and payment bonds for one hundred percent (100%) of the Contract Price.

8. Substitution of Securities. Substitution of appropriate securities in lieu of retention amounts from progress payments is permitted under Public Contract Code Section 22300.

9. Subcontractor List. Each bidder must submit the name, location of the place of business, and California contractor license number and DIR registration number for each Subcontractor who will perform work or service or fabricate or install work for the prime contractor in excess of one-half (1/2) of one percent (1%) of the bid price, using the Subcontractor List form included with the Contract Documents.

10. **Instructions to Bidders.** Additional and more detailed information is provided in the Instructions for Bidders, which should be carefully reviewed by all bidders before submitting a Bid Proposal.

11. **Bidders' Conference.** A bidders' conference will be held on July 8, 2019 at 1:30 p.m., at the following location: Development Services Center, 17575 Peak Ave., Morgan Hill, CA 95037 for the purpose of acquainting all prospective bidders with the Contract Documents and the Worksite. **The bidders' conference is mandatory**. A bidder who fails to attend a mandatory bidders' conference may be disqualified from bidding.

12. **Estimated Cost.** The estimated construction cost is $2,525,000

By: Irma Torrez Date: June 21, 2019

Publication Dates: 1) June 28, 2019 2) July 5, 2019

END OF NOTICE INVITING BIDS

INSTRUCTIONS TO BIDDERS

Each Bid Proposal submitted to the City of Morgan Hill ("City") for its Morgan Hill Library Addition ("Project") must be submitted in accordance with the following instructions and requirements:

1. Bid Submission.

1.1 General. Each bid "(Bid Proposal") must be signed, sealed and submitted to City, using the form provided in the Contract Documents, by or before the date and time set forth in the Notice Inviting Bids, or as amended by subsequent addendum. Faxed or emailed Bid Proposals will not be accepted, unless otherwise specified. Late submissions will be returned unopened. City reserves the right to postpone the date and time for receiving or opening bids. Each bidder is solely responsible for all of its costs to prepare and submit its bid and by submitting a bid waives any right to recover those costs from City. The bid price(s) must include all costs to perform the Work as specified, including all indirect costs such as applicable taxes, insurance and field offices.

1.2 Bid Envelope. The envelope containing the sealed Bid Proposal and required attachments must be clearly labeled as follows:

BID PROPOSAL
Morgan Hill DSC
Morgan Hill Library Addition
City of Morgan Hill
17575 Peak Avenue
Morgan Hill, CA 95037
Attention: Bid Opening
Bid Date:_____
Bid Time: _____

The envelope must also be clearly labeled, as follows, with the bidder's name, address, and its registration number with the California Department of Industrial Relations ("DIR") for bidding on public works contracts (Labor Code sections 1725.5 and 1771.1):

[Contractor company name]
[Street address]
[City, state, zip code]
DIR Registration No._____

Please note: If City is unable to confirm that the bidder's DIR registration is current, City must disqualify the bidder and return its bid unopened (Labor Code section 1725.5).

2. **Examination of Contract Documents and Project Site.** Each bidder is solely responsible for diligent and thorough review of the Contract Documents (as defined in the General Conditions), examination of Project site, and reasonable and prudent inquiry concerning known and potential site conditions prior to submitting a Bid Proposal. However, bidders should not enter onto City's property or the Project site without prior written authorization from City. Bidders are responsible for reporting any errors or omissions in the Contract Documents to City prior to submitting a Bid Proposal, subject to the limitations of Public Contract Code Section 1104. City expressly disclaims responsibility for assumptions the bidder might draw from the presence or absence of information provided by City.

3. **Requests for Information.** Questions regarding the Project, the bid procedures or any of the Contract Documents must be submitted in writing to yat.cho@morganhill.ca.gov

4. **Addenda.** Any addenda issued prior to the bid opening are part of the Contract Documents. Subject to the limitations of Public Contract Code section 4104.5, City reserves the right to issue addenda prior to bid time.

5. **Brand Designations and "Or Equal" Substitutions.** Any specification designating a material, product, thing, or service by specific brand or trade name, followed by the words "or equal," is intended only to indicate quality and type of item desired, and bidders may request use of any equal material, product, thing, or service. All data substantiating the proposed substitute as an "equal" item must be submitted with the written request for substitution. This provision does not apply to materials, products, things, or services that may lawfully be designated by a specific brand or trade name under Public Contract Code Section 3400(c).

   5.1 Pre-Bid Requests. Any request for submission made before the Contract is awarded must be submitted to the City Engineer at least ten (10) days before the opening of bids so that all interested bidders may be notified of any approved alternative.

   5.2 Post-Award Requests. After the Contract is awarded, Contractor may submit a substitution within fourteen (14) days after the date of award of the Contract, or as specified in the Special Conditions.

6. **Bidders Interested in More Than One Bid.** No person, firm, or corporation may submit or be a party to more than one (1) Bid Proposal unless alternate bids are specifically called for. However, a person, firm, or corporation that has submitted a subcontract proposal or quote to a bidder may submit subcontract proposals or quotes to other bidders.

7. **Bid Proposal Form and Enclosures.** Each Bid Proposal must be completed in ink using the Bid Proposal form included in the Contract Documents. The Bid Proposal form should be fully completed without interlineations, alterations, or erasures. Any necessary corrections must be clear and legible, and must be initialed by the bidder's authorized representative. A Bid Proposal submitted with terms such as "negotiable," "will negotiate," or similar, will be considered non-responsive. Each Bid Proposal must be accompanied by bid security, as set forth in Section 9 below, and by the completed Subcontractor List, and Non-Collusion Declaration using the forms included in the Contract Documents.

8. **Authorization and Execution.** Each Bid Proposal must be signed by the bidder's authorized representative. A Bid Proposal submitted by a partnership must be signed in the partnership name by a general partner with authority to bind the partnership. A Bid Proposal submitted by a corporation must be signed with the legal name of the corporation, followed by the signature and title of two (2) officers of the corporation with full authority to bind the corporation to the terms of the Bid Proposal, under California Corporation Code section 313.

9. **Bid Security.** Each Bid Proposal must be accompanied by bid security of ten percent (10%) of the maximum bid amount, in the form of a cashier's check, a certified check, or a bid bond, using the form included in the Contract Documents, executed by a surety licensed to do business in the State of California, made payable to City. The bid security must guarantee that upon award of the bid, the bidder will execute and submit the Contract on the form included in the Contract Documents, will submit payment and performance bonds one hundred percent (100%) of the maximum Contract Price, and will submit the insurance certificates and endorsements as required by the Contract Documents within ten (10) days after issuance of the notice of award.

10. **Withdrawal of Bid Proposals.** A Bid Proposal may not be withdrawn for a period of ninety (90) days after the bid opening without forfeiture of the bid security, except as authorized for material error under Public Contract Code Section 5100 et seq.

11. **Bid Protest.** Any bid protest must be in writing and received by City at the City Attorney's Office at 17575 Peak Avenue, Morgan Hill, CA, (Fax: (408) 779-1592), before 5:00 p.m. no later than two (2) working days following bid opening (the "Bid Protest Deadline") and must comply with the following requirements:

    11.1 General. Only a bidder who has actually submitted a Bid Proposal is eligible to submit a bid protest against another bidder. Subcontractors are not eligible to submit bid protests. A bidder may not rely on the bid protest

submitted by another bidder, but must timely pursue its own protest. If required by City, the protesting bidder must submit a non-refundable fee in the amount specified by City, based upon City's reasonable costs to administer the bid protest. Any such fee must be submitted to City no later than the Bid Protest Deadline, unless otherwise specified. For purposes of this Section 11, a "working day" means a day that City is open for normal business, and excludes weekends and holidays observed by City.

11.2 Protest Contents. The bid protest must contain a complete statement of the basis for the protest and all supporting documentation. Material submitted after the Bid Protest Deadline will not be considered. The protest must refer to the specific portion or portions of the Contract Documents upon which the protest is based. The protest must include the name, address, email address, and telephone number of the person representing the protesting bidder if different from the protesting bidder.

11.3 Copy to Protested Bidder. A copy of the protest and all supporting documents must be concurrently transmitted by fax or by email, by or before the Bid Protest Deadline, to the protested bidder and any other bidder who has a reasonable prospect of receiving an award depending upon the outcome of the protest.

11.4 Response to Protest. The protested bidder may submit a written response to the protest, provided the response is received by City before 5:00 p.m., within two (2) working days after the Bid Protest Deadline or after actual receipt of the bid protest, whichever is sooner (the "Response Deadline"). The response must include all supporting documentation. Material submitted after the Response Deadline will not be considered. The response must include the name, address, email address, and telephone number of the person representing the protested bidder if different from the protested bidder.

11.5 Copy to Protesting Bidder. A copy of the response and all supporting documents must be concurrently transmitted by fax or by email, by or before the Response Deadline, to the protesting bidder and any other bidder who has a reasonable prospect of receiving an award depending upon the outcome of the protest.

11.6 Exclusive Remedy. The procedure and time limits set forth in this section are mandatory and are the bidder's sole and exclusive remedy in the event of bid protest. A bidder's failure to comply with these procedures will constitute a waiver of any right to further pursue a bid protest, including filing a Government Code Claim or initiation of legal proceedings.

11.7 Right to Award. City reserves the right to award the Contract to the bidder it has determined to be the responsible bidder submitting the lowest

responsive bid, and to issue a notice to proceed with the Work notwithstanding any pending or continuing challenge to its determination.

12. **Rejection of Bids; Award of Contract.** City reserves the right, acting in its sole discretion, to waive immaterial bid irregularities, the right to accept or reject any and all bids, or to abandon the Project entirely. The Contract will be awarded, if at all, within ninety (90) days after opening of bids or as otherwise specified in the Special Conditions, to the responsible bidder that submitted the lowest responsive bid.

13. **Bonds.** The successful bidder is required to submit payment and performance bonds as specified in the Contract Documents using the bond forms included in the Contract Documents. All required bonds must be calculated on the maximum total Contract price as awarded, including additive alternates, if applicable.

14. **Evidence of Responsibility.** Within twenty four (24) hours following a request by City, a bidder must submit to City satisfactory evidence showing the bidder's financial resources, the bidder's experience in the type of work being required by City, the bidder's organization available for the performance of the Contract and any other required evidence of the bidder's qualifications to perform the proposed Contract. City may consider such evidence before making its decision awarding the proposed Contract.

15. **License(s).** The successful bidder and its Subcontractor(s) must possess the California contractor's license(s) in the classification(s) required by law to perform the Work.

16. **Taxes.** The bid price must include all applicable federal, state, and local taxes.

17. **Ineligible Subcontractor.** Any Subcontractor who is ineligible to perform work on a public works project under Labor Code Sections 1777.1 or 1777.7 is prohibited from performing work on this Project.

18. **Subcontract Limitation.** The successful bidder may not subcontract out more than **eighty percent (80%)** of the original total contract price, except that any items of work in the Engineer's Estimate designated "Specialty Items" may be performed by subcontract and the value of the work may be deducted from the original total contract price before computing the amount of work required to be performed by Contractor's own forces. When items of work in the Engineer's Estimate are preceded by the letters (S) or (S-F), those items are designated as "Specialty Items." Where an entire item is subcontracted, the value of work subcontracted will be based on the contract item bid price. When a portion of an item is subcontracted, the

value of work subcontracted will be determined by the Engineer based on the estimated percentage of the contract item bid price.

19. DIR Registration. City will not accept a Bid Proposal from or enter into the Contract with a bidder, without proof that the bidder and its Subcontractors are registered with the DIR to perform public work under Labor Code Section 1725.5, subject to limited legal exceptions.

20. Bid Schedule. Bidders are required to fully complete the Bid Schedule form accompanying the Bid Proposal form with unit prices as indicated, and to submit the completed Bid Schedule with their Bid Proposal.

20.1 Incorrect Totals. In the event of a computational error for any bid item (base bid or alternate) resulting in an incorrect extended total for that item, the submitted base bid or bid alternate total will be adjusted to reflect the corrected amount (estimated quantity X unit cost), unless the cumulative amount of correction changes the total amount of the base bid or bid alternate by more than five percent (5%). In the event of a discrepancy between the actual total of the itemized or unit prices shown on the Bid Schedule for the base bid, and the amount entered as the base bid on the Bid Proposal form, the actual total of the itemized or unit prices shown on the Bid Schedule for the base bid will be deemed the base bid price. Likewise, in the event of a discrepancy between the actual total of the itemized or unit prices shown on the Bid Schedule for any bid alternate, and the amount entered for the alternate on the Bid Proposal form, the actual total of the itemized prices shown on the Bid Schedule for that alternate will be deemed the alternate price. Nothing in this provision is intended to prevent a bidder from requesting to withdraw its bid for material error under Public Contract Code Section 5100 et seq.

20.2 Estimated Quantities. The quantities shown on the Bid Schedule are estimated and the actual quantities required to perform the Work may be greater or less than the estimated amount. The Contract Price will be adjusted to reflect the actual quantities required for the Work based on the itemized or unit prices provided in the Bid Schedule, with no allowance for anticipated profit for quantities that are deleted or decreased.

21. Bidder's Questionnaire. A completed, signed Bidder's Questionnaire using the form provided with the Contract Documents and including all required attachments must be submitted within 48 hours following a request by City. A bid that does not fully comply with this requirement may be rejected as nonresponsive. A bidder who submits a Bidder's Questionnaire which is subsequently determined to contain false or misleading information, or material omissions, may be disqualified as non-responsible.

END OF INSTRUCTIONS TO BIDDERS

BID PROPOSAL

MORGAN HILL LIBRARY ADDITION

_____ ("Bidder") hereby submits this Bid Proposal to the City of Morgan Hill ("City") for the above-referenced project ("Project") in response to the Notice Inviting Bids and in accordance with the Contract Documents referenced therein.

1. **Base Bid.** Bidder proposes to perform and fully complete the Work for the Project as specified in the Contract Documents, within the time required for full completion of the Work, for the following price ("Base Bid"):
   $ _____.

2. **Addenda.** Bidder acknowledges receipt of the following addenda:

Addendum:	Date Received:	Addendum:	Date Received:
#01	_____	#05	_____
#02	_____	#06	_____
#03	_____	#07	_____
#04	_____	#08	_____

3. **Bidder's Warranties.** By signing and submitting this Bid Proposal, Bidder warrants the following:

   3.1 Examination of Contract Documents. Bidder has thoroughly examined the Contract Documents, and represents that, to the best of Bidder's knowledge there are no errors, omissions, or discrepancies in the Contract Documents subject to the limitations of Public Contract Code Section 1104.

   3.2 Examination of Worksite. Bidder has had the opportunity to examine the Worksite and local conditions at the Project location.

   3.3 Bidder is Qualified. Bidder is fully qualified to perform the Work.

   3.4 Responsibility for Bid. Bidder has carefully reviewed this Bid Proposal and is solely responsible for any errors or omissions contained in its completed Bid.

4. **Award of Contract** . By signing and submitting this Bid Proposal, Bidder agrees that if Bidder is awarded the Contract for the Project, that within ten (10) days following issuance of the notice of award to Bidder, Bidder will do all of the following:

4.1 Execute Contract. Enter into the Contract with City in accordance with the terms of this Bid Proposal, by signing and submitting to City the Contract prepared by City using the form included with the Contract Documents;

4.2 Submit Required Bonds. Submit to City a payment bond and a performance bond, each for one hundred percent (100%) of the Contract Price, using the bond forms provided and in accordance with the requirements of the Contract Documents; and

4.3 Insurance Requirements. Submit to City the insurance certificate(s) and endorsement(s) as required by the Contract Documents.

5. Wage Theft Prevention. All Bidders are expected to have read and understand the "Wage Theft Prevention Policy" adopted by the City Council on July 26, 2017.

The undersigned Bidder certifies that neither Bidder nor its principals have been found by a final court judgement or final administrative action of an investigatory agency to have violated federal, state or local wage and hour laws within the past five years from the date of the submitted bid. Bidder or its principals who are unable to so certify, must disclose wage and hour violations, and shall provide a copy of (i) the court order and judgment and/or final administrative decision; and (ii) documents demonstrating either that the order/judgment has been satisfied, or if the order/judgment has not been fully satisfied, a written and signed description of Bidder's efforts to date to satisfy the order/judgment. Signing this bid shall constitute signature of this Certification.

The City, at its sole discretion, may disqualify a bidder based on one or more disclosed judgments consistent with the criteria set forth in the Policy.

6. Bid Security. As a guarantee that if awarded the Contract, it will perform its obligations under Section 4, above, Bidder is enclosing bid security in the amount of ten percent (10%) of its maximum bid amount in the following form:

____ A cashier's check or certified check payable to City of Morgan Hill and issued by _____ Bank in the amount of $_____.

____ A bid bond, using the Bid Bond form included with the Contract Documents, payable to City of Morgan Hill and executed by a surety licensed to do business in the State of California.

7. Iran Contracting Act. Bidder certifies that it is not identified on a list created under the Iran Contracting Act, Public Contract Code 2200 et seq. (the "Act") as a person engaging in investment activities in Iran, as defined in the Act, or is otherwise expressly exempt under the Act.

This Bid Proposal is hereby submitted on _____, 20__:

s/ _____ _____
Name and Title [print]

_____ _____
Company Name License # and Classification

_____
DIR Registration #

_____ _____
Address Phone

_____ _____
City, State, Zip Fax

END OF BID PROPOSAL

BID SCHEDULE I – GENERAL
MORGAN HILL LIBRARY ADDITION

This Bid Schedule must be completed in ink and must be included with the sealed Bid Proposal. The unit cost for each item must be inclusive of all costs, whether direct or indirect, including profit and overhead. The sum of all amounts entered in the "Extended Total" column must be identical to the Base Bid price entered in Section 1 of the Bid Proposal Form. Quantities shown are required for bid purposes and may or may not be final pay quantities. Actual quantities, if different, must be substantiated during the Project by the Contractor (either by field measurement, trucking tags, or other means acceptable to the Engineer).

Bid Item	Description of Bid Item	Approximate Quantity/Unit of Measure	Unit Price	Extended Total
1	Morgan Hill Library Addition	1 LS		
2	Supplemental Work	1 LS	$100,000	$100,000

Bid Schedule I Total	

END OF BID SCHEDULE

SUBCONTRACTOR LIST

For each Subcontractor who will perform a portion of the Work in an amount in excess of one-half of 1% of the Bidder's total Contract Price,[1] the bidder must list a description of the work, the name of the Subcontractor, its California contractor license number, the location of its place of business, and DIR registration number. **Bidders: Please print legibly. Illegible forms may be rejected.**

DESCRIPTION OF WORK	SUBCONTRACTOR NAME	CALIFORNIA CONTRACTOR LICENSE NUMBER	DIR REG. NO.	LOCATION OF BUSINESS	LOCAL VENDOR[2] YES/NO

END OF SUBCONTRACTOR LIST

[1] For street or highway construction this requirement applies to any subcontract of $10,000 or more.
[2] A Subcontractor is considered local if its principle place of business is within the city limits of Morgan Hill.

NONCOLLUSION DECLARATION

(To be executed by bidder and submitted with bid)

State of California County of _____	)))	ss.

The undersigned declares:

I am the _____ [title] of _____ [business name], the party making the foregoing bid.

The bid is not made in the interest of, or on behalf of, any undisclosed person, partnership, company, association, organization, or corporation. The bid is genuine and not collusive or sham. The bidder has not directly or indirectly induced or solicited any other bidder to put in a false or sham bid. The bidder has not directly or indirectly colluded, conspired, connived, or agreed with any bidder or anyone else to put in a sham bid, or to refrain from bidding. The bidder has not in any manner, directly or indirectly, sought by agreement, communication, or conference with anyone to fix the bid price of the bidder or any other bidder, or to fix any overhead, profit, or cost element of the bid price, or of that of any other bidder. All statements contained in the bid are true. The bidder has not, directly or indirectly, submitted his or her bid price or any breakdown thereof, or the contents thereof, or divulged information or data relative thereto, to any corporation, partnership, company, association, organization, bid depository, or to any member or agent thereof, to effectuate a collusive or sham bid, and has no paid and will not pay, any person or entity for such purpose.

This declaration is intended to comply with California Public Contract Code Section 7106 and Title 23 U.S.C Section 112.

I declare under penalty of perjury under the laws of the State of California that the foregoing is true and correct and that this declaration is executed on _____ [date], at _____ [city], _____ [state].

s/_____

_____
Name [print]

CALIFORNIA ALL-PURPOSE ACKNOWLEDGMENT CIVIL CODE ' 1189

A notary public or other officer completing this certificate verifies only the identity of the individual who signed the document, to which this certificate is attached, and not the truthfulness, accuracy, or validity of that document.

State of **CALIFORNIA**)

County of SANTA CLARA)

On _____, before me, _____

a Notary Public in and for said County and State, personally appeared

_____

_____

proved to me on the basis of satisfactory evidence to be the person/s whose name/s is/are subscribed to the within instrument and acknowledged to me that he/she/they executed the same in his/her/their authorized capacity/ies, and that by his/her/their signature/s on the instrument the person/s, or the entity upon behalf of which the person/s acted, executed the instrument.

I certify under PENALTY OF PERJURY under the laws of the State of California that the foregoing paragraph is true and correct.

WITNESS my hand and official seal.

_____

SIGNATURE OF NOTARY PUBLIC

Place Notary Seal Above

BID BOND

_____ ("Bidder") has submitted a bid, dated _____, 20_____ ("Bid"), to the City of Morgan Hill ("City") for work on the _____ ("Project"). Under this duly executed bid bond ("Bid Bond"), Bidder as Principal and _____, its surety ("Surety"), are bound to City as obligee in the penal sum of ten percent (10%) of the maximum amount of the Bid (the "Bond Sum"). Bidder and Surety bind themselves and their respective heirs, executors, administrators, successors and assigns, jointly and severally, as follows:

1. General. If Bidder is awarded the Contract for the Project, Bidder will enter into the Contract with City in accordance with the terms of the Bid.

2. Submittals. Within ten (10) days following issuance of the notice of award to Bidder, Bidder must submit to City the following:

2.1 Contract. The executed Contract, using the form provided by City in the Project contract documents ("Contract Documents");

2.2 Payment Bond. A payment bond for one hundred percent (100%) of the maximum Contract Price, executed by a surety licensed to do business in the State of California using the Payment Bond form included with the Contract Documents;

2.3 Performance Bond. A performance bond for one hundred percent (100%) of the maximum Contract Price, executed by a surety licensed to do business in the State of California using the Performance Bond form included with the Contract Documents; and

2.4 Insurance. The insurance certificate(s) and endorsement(s) required by the Contract Documents, and any other documents required under the Instructions for Bidders.

3. Enforcement. If Bidder fails to execute the Contract and to submit the bonds and insurance certificates as required by the Contract Documents, Surety guarantees that Bidder forfeits the Bond Sum to City. Any notice to Surety may be given in the manner specified in the Contract and delivered or transmitted to Surety as follows:

Attn: _____
Address: _____
City/State/Zip: _____
Phone: _____

Fax: _____
Email: _____

4. Duration; Waiver. If Bidder fulfills its obligations under Section 2, above, then this obligation will be null and void; otherwise it will remain in full force and effect for ninety (90) days following award of the Contract or until this Bid Bond is returned to Bidder, whichever occurs first. Surety waives the provisions of Civil Code Sections 2819 and 2845.

This Bid Bond is entered into and is effective on _____, 20_____.

SURETY:

_____

s/ _____

Name: _____

Title: _____

(Attach Acknowledgement, Notary Seal, and Attorney-In-Fact Certificate)

CONTRACTOR:

_____

s/ _____

Name: _____

Title: _____

APPROVED AS TO FORM:

By:_____
Donald A. Larkin, City Attorney

Date:_____

BIDDER'S QUESTIONNAIRE

MORGAN HILL LIBRARY ADDITION PROJECT

Within forty-eight (48) hours following a request by City, a bidder must submit to City a completed, signed Bidder's Questionnaire using this form and including all required attachments. City may request the Questionnaire from one (1) or more of the apparent low bidders following the bid opening and may use the completed Questionnaire to evaluate a bidder's qualifications for this Project. The Questionnaire must be filled out completely, accurately, and legibly. Any errors, omissions, or misrepresentations in completion of the Questionnaire may be grounds for rejection of the bid or termination of a Contract awarded pursuant to the bid.

Part 1: General Information

Bidder Business Name: _____ ("Bidder")

Check One: ___ Corporation
___ Partnership
___ Sole Proprietorship
___ Joint Venture of:_____
___ Other:_____

Address: _____

_____

Phone: _____

Fax: _____

Owner of Company: _____

Contact Person: _____

Email:_____

Bidder's California Contractor's License Number(s):
_____

Part 2: Bidder Experience

1. How many years has Bidder been in business under its present business name? _____

2. Has Bidder completed projects similar in type and size to this Project as a general contractor? _____

3. Has Bidder ever been disqualified on grounds that it is not responsible? If yes, provide additional information on a separate sheet of paper regarding the disqualification, including the name and address of the agency or owner of the subject project, the type and size of the project, the reasons that Bidder was disqualified as not responsible, and the month and year in which the disqualification occurred.

4. Has Bidder ever been terminated from a construction project, either as a general contractor or as a subcontractor? If yes, provide additional information on a separate sheet of paper regarding the termination, including the name and address of the agency or owner of the subject project, the type and size of the project, whether Bidder was under contract as a general contractor or a subcontractor, the reasons that Bidder was terminated, and the month and year in which the termination occurred.

5. Provide information about Bidder's past projects performed as general contractor as follows:

5.1 Six (6) most recently completed public works projects within the last three (3) years;

5.2 Three (3) largest completed projects within the last three (3) years; and

5.3 Any project which is similar to this Project.

6. Use separate sheets of paper provide all of the following information for <u>each</u> project identified in response to the above three (3) categories:

6.1 Project name
6.2 Location
6.3 Owner
6.4 Owner contact (name and current phone number)
6.5 Architect or engineer name
6.6 Architect or engineer contact (name and current phone number)
6.7 Project manager (name and current phone number)
6.8 Description of project, scope of work performed
6.9 Initial contract value (at time of bid award)
6.10 Final cost of construction (including change orders)
6.11 Original scheduled completion date
6.12 Time extensions granted (number of days)
6.13 Actual date of completion
6.14 Number and amount of stop notices or mechanic's liens filed

6.15 Amount of liquidated damages assessed against Bidder
6.16 Nature and resolution of any claim, lawsuit, and/or arbitration between Bidder and the owner.

Part 3: Verification

In signing this document, I, the undersigned, declare that I am duly authorized to sign and submit this Bidder's Questionnaire on behalf of the named bidder, and that all responses and information set forth in this Bidder's Questionnaire and accompanying attachments are, to the best of my knowledge, true, accurate and complete as of the date of submission. **I declare under penalty of perjury under the laws of the State of California that the foregoing is true and correct.**

Signature: _____ Date: _____

By [name, title]: _____

END OF BIDDER'S QUESTIONNAIRE

CONTRACT

This public works contract ("Contract") is entered into by and between the City of Morgan Hill ("City") and _____ ("Contractor") for work on the Morgan Hill Library Addition ("Project").

The parties agree as follows:

1. **Award of Contract**. In response to the Notice Inviting Bids, Contractor has submitted a Bid Proposal to perform work on the Project, and on _____, 20___, (contract date) City authorized award of this Contract to Contractor for the amount of Contractor's bid.

2. **Contract Documents**. The Contract Documents incorporated into this Contract include and are comprised of all of the following:

2.1 Notice Inviting Bids;
2.2 Instructions to Bidders;
2.3 Addenda, if any;
2.4 Bid Proposal and attachments thereto;
2.5 Contract;
2.6 Payment and Performance Bonds;
2.7 General Conditions;
2.8 Special Conditions;
2.9 Project Drawings and Specifications;
2.10 Change Orders, if any;
2.11 Notice of Award;
2.12 Notice to Proceed;
2.13 And the following: Uniform Building Code; City Standard Details

3. **Contractor's Obligations.** Contractor agrees to perform all of the Work required for the Project, as specified in the Contract Documents. Contractor must provide, furnish, and supply all things necessary and incidental for the timely performance and completion of the Work, including all necessary labor, materials, equipment, transportation, and utilities, unless otherwise specified in the Contract Documents. Contractor must use its best efforts to complete the Work in a professional and expeditious manner and to meet or exceed the performance standards required by the Contract Documents.

4. **Payment.** As full and complete compensation for Contractor's timely performance and completion of the Work in strict accordance with the terms and conditions of the Contract Documents, City will pay Contractor _____ Dollars ($_____) (the "Contract Price"), in accordance with the payment provisions in the General Conditions. The Contract Price includes all applicable federal, state, and local taxes.

5. **Time for Completion.** Contractor will fully complete the Work for the Project within 270 calendar days from the commencement date given in the Notice to Proceed ("Contract Time"). By signing below, Contractor expressly waives any claim for delayed early completion.

6. **Liquidated Damages.** If Contractor fails to complete the Work within the Contract Time, City will assess liquidated damages in the amount of One-Thousand-Dollars ($1000,00) for each day of unexcused delay in completion, and the Contract Price will be reduced accordingly.

7. **Labor Code Compliance.**

   7.1 **General.** This Contract is subject to all applicable requirements of Chapter 1 of Part 7 of Division 2 of the Labor Code, including requirements pertaining to wages, working hours and workers' compensation insurance.

   7.2 **Prevailing Wages.** This Project is subject to the prevailing wage requirements applicable to the locality in which the Work is to be performed for each craft, classification or type of worker needed to perform the Work, including employer payments for health and welfare, pension, vacation, apprenticeship and similar purposes. Copies of these prevailing rates are available online at http://www.dir.ca.gov/DLSR.

   7.3 **DIR Registration.** City will not enter into the Contract with a bidder, without proof that the bidder and its Subcontractors are registered with the California Department of Industrial Relations ("DIR") to perform public work under Labor Code Section 1725.5, subject to limited legal exceptions.

8. **Workers' Compensation Certification.** Under Labor Code Section 1861, by signing this Contract, Contractor certifies as follows: "I am aware of the provisions of Labor Code Section 3700 which require every employer to be insured against liability for workers' compensation or to undertake self-insurance in accordance with the provisions of that code, and I will comply with such provisions before commencing the performance of the Work on this Contract."

9. Notice. Any notice, billing, or payment required by the Contract Documents must be made in writing, and sent to the other party by personal delivery, U.S. Mail, a reliable overnight delivery service, facsimile, or by email as a PDF (or comparable) file. Notice is deemed effective upon delivery unless otherwise specified. Notice for each party must be given as follows:

City:

City of Morgan Hill
17575 Peak Avenue
Morgan Hill, CA 95037
Phone: (409) 779-7259
Attn: City Clerk
Email: michelle.bigelow@morganhill.ca.gov
Copy to:yat.cho@morganhill.ca.gov

Contractor:

Name:_____
Address:_____
City/State/Zip:_____
Phone:_____
Attn:_____
Email:_____
Copy to:_____

10. General Provisions.

10.1 Assignment and Successors. Contractor may not assign its rights or obligations under this Contract, in part or in whole, without City's written consent. This Contract is binding on Contractor's successors and permitted assigns.

10.2 Third Party Beneficiaries. There are no intended third-party beneficiaries to this Contract except as expressly provided in the General Conditions or Special Conditions.

10.3 Governing Law and Venue. This Contract will be governed by California law and venue will be in the Superior Court of Santa Clara County, and no other place.

10.4 Amendment. No amendment or modification of this Contract will be binding unless it is in a writing duly authorized and signed by the parties to this Contract.

10.5 Integration; Severability. This Contract and the Contract Documents incorporated herein, including authorized amendments or Change Orders thereto, constitute the final, complete, and exclusive terms of the agreement between City and Contractor. If any provision of the Contract Documents, or portion of a provision, is determined to be illegal, invalid, or unenforceable, the remaining provisions of the Contract Documents will remain in full force and effect.

10.6 Authorization. Each individual signing below warrants that he or she is authorized to do so by the party that he or she represents, and that this Contract is legally binding on that party. If Contractor is a corporation, signatures from two (2) officers of the corporation are required pursuant to California Corporation Code Section 313.

[Signatures are on the following page.]

AS SET FORTH IN CA. CORP. CODE § 313, TWO SIGNATURES ARE REQUIRED FOR CALIFORNIA CORPORATIONS:
(1) CHAIRPERSON OF THE BOARD, PRESIDENT, OR VICE PRESIDENT; AND
2) SECRETARY, ASSISTANT SECRETARY, CHIEF FINANCIAL OFFICER OR ASSISTANT TREASURER.

The parties agree to this Contract as witnessed by the signatures below:

CITY OF MORGAN HILL:

_____
Christina J. Turner
City Manager

Date: _____

Attest:

_____
Michelle Bigelow
Deputy City Clerk

Date: _____

Approved as to Form:

_____
Donald A. Larkin
City Attorney

Date: _____

CONTRACTOR:
[NAME OF CONTRACTOR]

_____
Signature

_____
Name/Title [print]

Date: _____

Corporate entities must provide a second signature:

_____
Signature

_____
Name/Title [print]

Date: _____

_____
Contractor's License Number(s)

_____
Expiration Date(s)

Seal:

_____
Contractor's DIR Registration Number(s)

END OF CONTRACT

PAYMENT BOND

The City of Morgan Hill ("City") and _____ ("Contractor") have entered into a contract, dated _____, 20___ ("Contract") for work on the _____ ("Project"). The Contract is incorporated by reference into this Payment Bond ("Bond").

1. **General.** Under this Bond, Contractor as principal and _____ _____, its surety ("Surety"), are bound to City as obligee in an amount not less than _____ Dollars ($_____) ("Bond Sum"), under California Civil Code Sections 9550, et seq.

2. **Surety's Obligation.** If Contractor or any of its Subcontractors fails to pay any of the persons named in California Civil Code Section 9100 amounts due under the Unemployment Insurance Code with respect to work or labor performed under the Contract, or for any amounts required to be deducted, withheld, and paid over to the Employment Development Department from the wages of employees of Contractor and its Subcontractors, under California Unemployment Insurance Code Section 13020, with respect to the work and labor, then Surety will pay for the same.

3. **Beneficiaries.** This Bond inures to the benefit of any of the persons named in California Civil Code Section 9100, so as to give a right of action to those persons or their assigns in any suit brought upon this Bond. Contractor must promptly provide a copy of this Bond upon request by any person with legal rights under this Bond.

4. **Duration.** If Contractor promptly makes payment of all sums for all labor, materials, and equipment furnished for use in the performance of the Work required by the Contract, in conformance with the time requirements set forth in the Contract and as required by California law, Surety's obligations under this Bond will be null and void. Otherwise, Surety's obligations will remain in full force and effect.

5. **Waivers.** Surety waives any requirement to be notified of alterations to the Contract or extensions of time for performance of the Work under the Contract. Surety waives the provisions of Civil Code Sections 2819 and 2845. City waives requirement of a new bond for any supplemental contract under Civil Code Section 9550. Any notice to Surety may be given in the manner specified in the Contract and delivered or transmitted to Surety as follows:

   Attn: _____
   Address: _____

City/State/Zip: _____
Phone: _____
Fax: _____
Email: _____

6. **Law and Venue.** This Bond will be governed by California law, and any dispute pursuant to this Bond will be venued in the Superior Court of Santa Clara County, and no other place. Surety will be responsible for City's attorneys' fees and costs in any action to enforce the provisions of this Bond.

7. **Effective Date; Execution.** This Bond is entered into and is effective on _____, 20__.

SURETY:

s/ _____

Name: _____

Title: _____

(Attach Acknowledgment with Notary Seal and Power of Attorney)

CONTRACTOR:

s/ _____

Name: _____

Title: _____

APPROVED AS TO FORM:

By:_____
Donald A. Larkin, City Attorney

Date:_____

END OF PAYMENT BOND

PERFORMANCE BOND

The City of Morgan Hill ("City") and
_____ ("Contractor")
have entered into a contract, dated _____, 20____ ("Contract") for work on the _____ ("Project").
The Contract is incorporated by reference into this Performance Bond ("Bond").

1. General. Under this Bond, Contractor as Principal and _____ _____, its surety ("Surety"), are bound to City as obligee for an amount not less than _____ Dollars ($_____) (the "Bond Sum"). By executing this Bond, Contractor and Surety bind themselves and their respective heirs, executors, administrators, successors and assigns, jointly and severally, to the provisions of this Bond.

2. Surety's Obligations; Waiver. If Contractor fully performs its obligations under the Contract, including its warranty obligations under the Contract, Surety's obligations under this Bond will become null and void upon recordation of the notice of completion, provided Contractor has timely provided a warranty bond as required under the Contract. Otherwise Surety's obligations will remain in full force and effect until expiration of the one (1) year warranty period under the Contract. Surety waives any requirement to be notified of and further consents to any alterations to the Contract made under the applicable provisions of the Contract Documents, including changes to the scope of Work or extensions of time for performance of Work under the Contract. Surety waives the provisions of Civil Code Sections 2819 and 2845.

3. Application of Contract Balance. Upon making a demand on this Bond, City will make the Contract Balance available to Surety for completion of the Work under the Contract. For purposes of this provision, the Contract Balance is defined as the total amount payable by City to Contractor as the Contract Price minus amounts already paid to Contractor, and minus any liquidated damages, credits, or backcharges to which City is entitled under the terms of the Contract.

4. Contractor Default. Upon written notification from City that Contractor is in default under Article 13 of the Contract General Conditions, time being of the essence, Surety must act within the time specified in Article 13 to remedy the default through one (1) of the following courses of action:

4.1 Arrange for completion of the Work under the Contract by Contractor, with City's consent, but only if Contractor is in default solely due to its financial inability to complete the Work;

4.2 Arrange for completion of the Work under the Contract by a qualified contractor acceptable to City, and secured by performance and payment bonds issued by an admitted surety as required by the Contract Documents, at Surety's expense, or

4.3 Waive its right to complete the Work under the Contract and reimburse City the amount of City's costs to have the remaining Work completed.

5. **Surety Default.** If Surety defaults on its obligations under the Bond, City will be entitled to recover all costs it incurs due to Surety's default, including legal, design professional, or delay costs.

6. **Notice.** Any notice to Surety may be given in the manner specified in the Contract and delivered or transmitted to Surety as follows:

Attn: _____
Address: _____
City/State/Zip: _____
Phone: _____
Fax: _____
Email: _____

7. **Law and Venue.** This Bond will be governed by California law, and any dispute pursuant to this Bond will be venued in the Superior Court of Santa Clara County, and no other place. Surety will be responsible for City's attorneys' fees and costs in any action to enforce the provisions of this Bond.

8. **Effective Date; Execution.** This Bond is entered into and effective on _____, 20___.

[Signatures are on the following page.]

SURETY:

s/ _____

Name: _____

Title: _____

(Attach Acknowledgment with Notary Seal and Power of Attorney)

CONTRACTOR:

s/ _____

Name: _____

Title: _____

APPROVED AS TO FORM:

By:_____
Donald A. Larkin, City Attorney

Date:_____

END OF PERFORMANCE BOND

WARRANTY BOND

The City of Morgan Hill ("City") and _____ ("Contractor") have entered into a contract, dated _____, 20___ ("Contract") for work on the _____ ("Project"). The Contract is incorporated by reference into this Warranty Bond ("Bond").

1. **General.** Under this Bond, Contractor as principal and _____ _____, its surety ("Surety"), are bound to City as obligee in the maximum amount of _____ Dollars ($_____) or 50% of the final Contract Price, whichever is greater ("Bond Sum").

2. **Warranty Period.** The Contract requires Contractor to guarantee its work and that of its Subcontractors on the Project, against defects in materials or workmanship which are discovered during the one (1) year period commencing with recordation of the Notice of Completion (the "Warranty Period").

3. **Surety's Obligations.** If Contractor faithfully carries out and performs its guarantee under the Contract, and, on due notice from City, repairs and make good at its sole expense any and all defects in materials and workmanship in the Project which are discovered during the Warranty Period, or if Contractor promptly reimburses City for all loss and damage that City sustains because of Contractor's failure to makes such repairs in accordance with the Contract requirements, then Surety's obligations under this Bond will be null and void. Otherwise, Surety's obligations will remain in full force and effect.

4. **Waiver.** Surety waives the provisions of Civil Code Sections 2819 and 2845.

5. **Notice.** Any notice to Surety may be given in the manner specified in the Contract and delivered or transmitted to Surety as follows:

   Attn: _____
   Address: _____
   City/State/Zip: _____
   Phone: _____
   Fax: _____
   Email: _____

6. **Law and Venue.** This Bond will be governed by California law, and any dispute pursuant to this Bond will be venued in the Superior Court of Santa Clara County, and no other place. Surety will be responsible for City's

attorneys' fees and costs in any action to enforce the provisions of this Bond.

7. Effective Date; Execution. This Bond is entered into and is effective on _____, 20__.

SURETY:

s/ _____

Name: _____

Title: _____

(Attach Acknowledgment with Notary Seal and Power of Attorney)

CONTRACTOR:

s/ _____

Name: _____

Title: _____

APPROVED AS TO FORM:

By:_____
Donald A. Larkin, City Attorney

Date:_____

END OF WARRANTY BOND

GENERAL CONDITIONS

Table of Contents:

Article 1 – Definitions 1
Article 2 – Roles and Responsibilities 5
Article 3 – Contract Documents 9
Article 4 – Bonds, Indemnity and Insurance 11
Article 5 – Contract Time 16
Article 6 – Contract Modification 21
Article 7 – General Construction Provisions 24
Article 8 – Payment 32
Article 9 – Labor Provisions 37
Article 10 – Safety Provisions 39
Article 11 – Completion and Warranty Provisions 40
Article 12 – Dispute Resolution 43
Article 13 – Suspension and Termination 48
Article 14 – Miscellaneous Provisions 50

Article 1
Definitions

1.1 Definitions. The following definitions apply to all of the Contract Documents unless otherwise indicated. Defined terms and titles of documents are capitalized in the Contract Documents, with the exception of the words “day,” “furnish,” “including,” “install,” “workday” or “working day.”

Allowance means an amount included in the Bid Proposal for Work that may or may not be included in the Project, depending on conditions that will not become known until after bids are opened. If the Contract Price includes an Allowance and the cost of performing the Work covered by that Allowance is greater or less than the Allowance, the Contract Price will be increased or decreased accordingly.

Article, as used in these General Conditions, means a numbered Article of the General Conditions, unless otherwise indicated by the context.

Change Order means a written document duly approved and executed by City, which changes the scope of Work, the Contract Price, or the Contract Time.

City means the City of Morgan Hill, acting through its City Council, officers, employees, and authorized representatives.

City Engineer means the City Engineer for City and his or her authorized delegee(s) designated to oversee and manage the Project on City’s behalf.

Claim means a separate demand by Contractor for change in the Contract Time or Contract Price, that has previously been submitted to City in accordance with the requirements of the Contract Documents, and which has been rejected by City, in whole or in part; or a written demand by Contractor objecting to the amount of Final Payment.

Contract means the signed agreement between City and Contractor.

Contract Documents means, collectively, all of the documents listed as such in Section 2 of the Contract, including the Notice Inviting Bids; the Instructions to Bidders; addenda, if any; the Bid Proposal, and attachments thereto; the Contract; the notice of award and notice to proceed; the payment and performance bonds; the General Conditions; the Special Conditions; the Project Drawings and Specifications; any Change Orders; and any other documents expressly made part of the Contract Documents.

Contract Price means the total compensation to be paid to Contractor for performance of the Work, as set forth in the Contract and as amended by Change Order or adjusted for an Allowance. The Contract Price is not subject to adjustment due to inflation or due to the increased cost of labor, material, or equipment following submission of the Bid Proposal. The Contract Price is deemed to include all applicable federal, state, and local taxes

Contract Time means the number of calendar days for performance of the Work, as set forth in the Contract and as amended by Change Order.

Contractor means the individual, partnership, corporation, or joint-venture who has signed the Contract with City to perform the Work.

Day means a calendar day unless otherwise specified.

Design Professional means the licensed individual(s) or firm(s) retained by City to provide architectural or engineering services for the Project. If no Design Professional has been retained for this Project, any reference to Design Professional is deemed to refer to the Engineer.

Drawings means City-provided plans and graphical depictions of the Project requirements and does not include Shop Drawings.

Engineer means the City Engineer for the City of Morgan Hill and his or her authorized delegee(s).

Final Completion means Contractor has fully completed all of the Work required by the Contract Documents, including all punch list items, any required commissioning, and has provided all required submittals, including the warranty bond, instructions and manuals, and as-built drawings to City's satisfaction.

Final Payment means payment to Contractor of the unpaid Contract Price, including release of undisputed retention, less amounts withheld pursuant to the Contract Documents, including liquidated damages, up to one hundred twenty five percent (125%) of the amount of any unreleased stop notice, amounts subject to setoff, up to one hundred fifty percent (150%) of any unresolved third-party claim for which Contractor is required to indemnify City, and up to one hundred fifty percent (150%) of any amount in dispute as authorized by Public Contract Code Section 7107.

Furnish means to purchase and deliver to the Worksite designated for installation.

Hazardous Materials means any substance or material identified now or in the future as hazardous under any federal, state, or local law or regulation, or any other substance or material that may be considered hazardous or otherwise subject to statutory or regulatory requirements governing handling, disposal, or cleanup.

Including, whether or not capitalized, means "including, but not limited to," unless the context requires otherwise.

Inspector means the individual(s) or firm(s) retained by City to inspect the workmanship, materials, and manner of construction of the Project and its components to ensure compliance with the Contract Documents and all applicable codes, regulations, and permits.

Install means to fix in place for materials, and to fix in place and connect for equipment.

Project means the public works project referenced in the Contract.

Project Manager means the individual designated by City to oversee and manage the Project on City's behalf and may include his or her authorized delegee(s) when the Project Manager is unavailable. If no Project Manager has been designated for this Project, any reference to Project Manager is deemed to refer to the Engineer.

RFI means a written request from Contractor for information from City or its Design Professional.

Section as used in these General Conditions, means a numbered Section of the General Conditions, unless otherwise indicated by the context.

Shop Drawings means drawings, plan details or other graphical depictions prepared by or on behalf of Contractor, and subject to City approval, which are

intended to provide details for fabrication, installation, and the like, of items required by or shown in the Drawings and Specifications.

Specifications means the technical, text specifications describing the Project requirements, which are prepared for and incorporated into this Project by or on behalf of City, and does not include the Contract, General Conditions or Special Conditions.

Subcontractor means an individual, partnership, corporation, or joint-venture retained by Contractor directly or indirectly through a subcontract to perform a specific portion of the Work. The term Subcontractor applies to subcontractors, suppliers, fabricators, and equipment lessors of all tiers, unless otherwise indicated by the context.

Technical Specifications means Specifications.

Work means all of the construction and services necessary or incidental to completing the Project in conformance with the requirements of the Contract Documents.

Work Day or Working Day, whether or not capitalized, means a weekday which is not a holiday observed by City.

Worksite means the place or places where the Work is performed.

Article 2
Roles and Responsibilities

2.1 Design Professional.

(A) ***General.*** Design Professional, as City's representative, is responsible for the overall design of the Project, and to the extent authorized by City, may act on City's behalf to ensure performance of the Work in compliance with the Contract Documents.

(B) ***Interpretation.*** Design Professional will decide all questions pertaining to interpretation of the Drawings or Specifications. The Design Professional's decision regarding interpretation of the Drawings or Specifications is final and conclusive.

2.2 Contractor.

(A) ***General.*** Contractor must provide all labor, materials, equipment and services necessary to perform and timely complete the Work in strict accordance with the Contract Documents, and in an economic and efficient manner in the best interests of City.

(B) ***Responsibility for the Work.*** Contractor is responsible for supervising and directing all aspects of the Work to facilitate the efficient and timely completion of the Work. Contractor is solely responsible for, and required to exercise full control over, construction means, methods, techniques, sequences, procedures, and coordination of all portions of the Work with that of all other Contractors and Subcontractors, except to the extent that the Contract Documents provide other specific instructions.

(C) ***Project Administration.*** Contractor must provide sufficient and competent administration, staff, and skilled workforce necessary to perform and timely complete the Work in accordance with the Contract Documents. Before starting the Work, Contractor must designate in writing and provide complete contact information, including phone numbers and email address, for the officer or employee in Contractor's organization who is to serve as Contractor's primary representative for the Project, and who has authority to act on Contractor's behalf. A Subcontractor may not serve as Contractor's primary representative.

(D) ***On-Site Superintendent.*** Contractor must, at all times during performance of the Work, provide a qualified and competent full-time superintendent, acceptable to City, and assistants, as necessary, who must be physically present at the Project site while any aspect of the Work is being performed. Failure to comply may result in temporary suspension of the Work, at Contractor's sole expense and with no extension of

Contract Time, until the superintendent is physically present to supervise the Work. Contractor must provide written notice to City, as soon as practicable, before replacing the superintendent.

(E) ***Standards; Compliance.*** Contractor must, at all times, ensure that the Work is performed in a good workmanlike manner following best practices and in full compliance with the Contract Documents and all applicable laws, regulations, codes, standards, and permits.

(F) ***Responsible Party.*** Contractor is solely responsible to City for the acts or omissions of any party or parties performing portions of the Work or providing equipment, materials or services for or on behalf of Contractor or its Subcontractors. If any person employed by Contractor fails or refuses to comply with the Engineer's directions regarding the performance of the Work, or is determined by the Engineer to be incompetent to perform the Work, or acts in a disorderly or improper manner at the Worksite, that person may be permanently dismissed from the Project at the request of the Engineer.

(G) ***Correction of Defects.*** Contractor must promptly correct, at Contractor's sole expense, any Work that is determined by City, Project Manager, or the Inspector to be deficient or defective in workmanship, materials, and equipment.

(H) ***Contractor's Records.*** Contractor must maintain all of its records relating to the Project in any form, including paper documents, photos, videos and electronic records. Project records subject to this provision include, but are not limited to, Project cost records and records relating to preparation of Contractor's bid.

(1) Contractor's cost records must include all supporting documentation, including original receipts, invoices, and payroll records, evidencing its direct costs to perform the Work, including, but not limited to, costs for labor, materials and equipment. Each cost record should include, at a minimum, a description of the expenditure with references to the applicable requirements of the Contract Documents, the amount actually paid, the date of payment, and whether the expenditure is part of the original Contract Price, related to an executed Change Order, or otherwise categorized by Contractor as extra work. Contractor's failure to comply with this provision as to any claimed cost operates as a waiver of any rights to recover the claimed cost.

(2) Contractor must continue to maintain its Project records in an organized manner for a period of four (4) years after City's

acceptance of the Project or following termination, whichever occurs first. Subject to prior notice to Contractor, City is entitled to inspect or audit any of Contractor's Project records relating to the Project or to investigate Contractor's plant or equipment during Contractor's normal business hours.

2.3 Subcontractors.

(A) ***General.*** All Work which is not performed by Contractor with its own forces must be performed by Subcontractors, subject to the fifty percent (50%) limitation set forth in the Instructions to Bidders. City reserves the right to approve or reject any and all Subcontractors proposed to perform the Work.

(B) ***Contractual Obligations.*** Contractor must require every Subcontractor to be bound to the provisions of the Contract Documents as they apply to the Subcontractor's portion(s) of the Work, and to likewise bind their subcontractors or suppliers. Nothing in these Contract Documents creates a contractual relationship between a Subcontractor and City, but City is deemed to be a third-party beneficiary of the contract between Contractor and each Subcontractor.

Copies of subcontracts must be available to the Engineer upon request. Before a Subcontractor commences Work on the Project, Contractor must provide the Engineer a written statement with the name of the Subcontractor, a description of each portion of the Work performed by the Subcontractor, and the percentage of the overall Work to be performed by the Subcontractor.

(C) ***Termination.*** If the Contract is terminated, each Subcontractor's agreement must be assigned by Contractor to City, subject to the prior rights of any surety, provided that City accepts the assignment by written notification, and assumes all rights and obligations of Contractor pursuant to each such subcontract agreement.

(D) ***Substitution of Subcontractor.*** If Contractor requests substitution of a listed Subcontractor under Public Contract Code Section 4107, Contractor is solely responsible for all costs City incurs in responding to the request, including legal fees and costs to conduct a hearing.

2.4 Coordination of Work.

(A) ***Concurrent Work.*** City reserves the right to perform or to have performed other work on or adjacent to the Project site while the Work is being performed. Contractor is responsible for coordinating its Work with other work being performed on or adjacent to the Project site, and must

avoid hindering, delaying, or interfering with the work of other contractors and subcontractors. To the full extent permitted by law, Contractor must hold harmless and indemnify City, Design Professional, and Project Manager against any and all claims arising from or related to Contractor's avoidable, negligent, or willful hindrance of, delay to, or interference with the work of another contractor or subcontractor.

(B) ***Defects.*** Before proceeding with any portion of the Work affected by the construction or operations of others, Contractor must give Project Manager prompt written notification of any defects Contractor discovers which will prevent the proper execution of the Work. Failure to give notice of any such known defects will be deemed acknowledgement by Contractor that the work of others is not defective and will not prevent the proper execution of the Work.

2.5 Submittals. Unless otherwise specified, Contractor must submit to Project Manager for review and approval, all schedules, Shop Drawings, samples, product data and similar submittals required by the Contract Documents, or upon request by Project Manager. Unless otherwise specified, all submittals, including requests for information (RFIs) are subject to the provisions of this Section.

(A) ***General.*** Contractor is responsible for ensuring that its submittals are accurate and conform to the Contract Documents.

(B) ***Time and Manner of Submission.*** Contractor must ensure that its submittals are prepared and delivered in a manner consistent with the current approved schedule for the Work and within the applicable time specified elsewhere in the Contract Documents, or if no time is specified, in such time and sequence so as not to delay the performance of the Work or completion of the Project.

(C) ***Required Contents.*** Each submittal must include the Project name and contact number, Contractor's name and address, the name and address of any Subcontractor or supplier involved with the submittal, the date, and references to applicable Specification section(s) and/or drawing and detail number(s).

(D) ***Required Corrections.*** If corrections are required, Contractor must promptly make and submit any required corrections in full conformance with the requirements of this Section.

(E) ***Effect of Review and Approval.*** Review and approval of a submittal by City will not relieve Contractor from complying with the requirements of the Contract Documents. Contractor is responsible for

any errors in any submittal, and review or approval of a submittal by City is not an assumption of risk or liability by City.

(F) ***Enforcement.*** Any Work performed or material used without prior approval of a required submittal will be performed at Contractor's risk, and Contractor may be required to bear the costs incident thereto, including the cost of removing and replacing such Work, repairs to other affected portions of the Work, and the cost of additional time or services required of the Design Professional, Project Manager, or Inspector.

(G) **Excessive RFIs.** RFIs will be considered excessive or unnecessary if the Engineer determines that the explanation or response to the RFI is clearly and unambiguously discernable in the Contract Documents. City's costs to review and respond to excessive or unnecessary RFIs may be deducted from payments otherwise due to Contractor.

Article 3
Contract Documents

3.1 Interpretation of Contract Documents.

(A) ***Drawings and Specifications.*** The Drawings and Specifications included in the Contract Documents are complementary. If Work is shown on one (1) but not on the other, Contractor must perform the Work as though fully described on both, consistent with the Contract Documents and reasonably inferable from them as being necessary to produce the indicated results. The Drawings and Specifications are deemed to include and require everything necessary and reasonably incidental to completion of the Work, whether or not particularly mentioned or shown. Contractor must perform all work and services and supply all things reasonably related to and inferable from the Contract Documents. In the event of a conflict between the Drawings and Specifications, the Specifications will control.

(B) ***Duty to Notify.*** If Contractor becomes aware of any ambiguity, discrepancy, omission, or error in the Drawings or Specifications, Contractor must immediately notify the Design Professional and request clarification of such, by submitting a written request for information (RFI) in the manner specified by City. The Design Professional's clarifications or interpretations will be final and binding.

(C) ***Figures and Dimensions.*** Figures control over scaled dimensions.

(D) ***Technical or Trade Terms.*** Any terms that have well-known technical or trade meanings will be interpreted in accordance with those

meanings, unless otherwise specifically defined in the Contract Documents.

(E) ***Measurements.*** Contractor must verify all relevant measurements at the Worksite before ordering any material or performing any Work, and will be responsible for the correctness of those measurements.

3.2 Order of Precedence. Information included in one (1) Contract Document but not in another will not be considered a conflict or inconsistency. Unless otherwise specified in the Special Conditions, in case of any conflict or inconsistency among the Contract Documents, the following order of precedence will apply, beginning from highest to lowest:

(A) Change Orders;
(B) Addenda;
(C) Contract;
(D) Notice to Proceed;
(E) Notice of Award;
(F) Special Conditions;
(G) General Conditions;
(H) Payment and Performance Bonds;
(I) Specifications;
(J) Drawings;
(K) Contractor's Bid Proposal and attachments;
(L) Notice Inviting Bids;
(M) Instructions to Bidders; and
(N) Any documents prepared by and on behalf of a third party, that were not prepared specifically for this Project, e.g., Caltrans Standard Specifications or Caltrans Special Provisions.

3.3 Caltrans Standard Specifications. Any reference to or incorporation of the Standard Specifications of the State of California, Department of Transportation ("Caltrans"), including "Standard Specifications," "Caltrans Specifications," "State Specifications," or "CSS," means the most current edition of Caltrans' Standard Specifications, unless otherwise specified ("Standard Specifications"), including the most current amendments as of the date that Contractor's bid was submitted for this Project. The following provisions apply to use of or reference to the Standard Specifications:

(A) ***Limitations.*** None of the "General Provisions" of the Standard Specifications, i.e., Sections 1 through 9, applies to these Contract Documents with the exception of any specific provisions, if any, which are expressly stated to apply to these Contract Documents.

(B) ***Conflicts or Inconsistencies.*** If there is a conflict or inconsistency between any provision in the Standard Specifications and a provision of

these Contract Documents, as determined by City, the provision in the Contract Documents will govern.

(C) ***Meanings.*** Terms used in the Standard Specifications are to be interpreted as follows:

(1) Any reference to the "Engineer" is deemed to mean the City Engineer.

(2) Any reference to the "Special Provisions" is deemed to mean the Special Conditions.

(3) Any reference to the "Department" or "State" is deemed to mean City.

3.4 For Reference Only. Contractor is responsible for the careful review of any document, study, or report appended to the Contract Documents solely for informational purposes and identified as "For Reference Only." Nothing in any document, study, or report so appended and identified is intended to supplement, alter, or void any provision of the Contract Documents. However, Contractor is advised that City or its representatives may be guided by information or recommendations included in such reference documents, particularly when making determinations as to the acceptability of proposed materials, methods, or changes in the Work. Contractor must promptly notify City of any perceived or actual conflict between the Contract Documents and any document provided For Reference Only.

Article 4
Bonds, Indemnity, and Insurance

4.1 Payment and Performance Bonds. Within ten (10) days following issuance of the notice of award, Contractor is required to provide a payment bond and a performance bond, each in the penal sum of not less than one hundred percent (100%) of the Contract Price, using the bond forms included with the Contract Documents. Each bond must be issued by a surety admitted in California. If an issuing surety cancels the bond or becomes insolvent, within seven (7) days following written notice from City, Contractor must substitute a surety acceptable to City. If Contractor fails to substitute an acceptable surety within the specified time, City may, at its sole discretion, withhold payment from Contractor until the surety is replaced to City's satisfaction, or terminate the Contract for default.

4.2 Indemnity. To the fullest extent permitted by law, Contractor must indemnify, defend, and hold harmless City, its agents and consultants, and Design Professional (individually, an "Indemnitee," and collectively the

"Indemnitees") from and against any and all liability, loss, damage, claims, expenses (including, without limitation, attorney fees, expert witness fees, paralegal fees, and fees and costs of litigation or arbitration) (collectively, "Liability") of every nature arising out of or in connection with the acts or omissions of Contractor, its employees, Subcontractors, representatives, or agents, in bidding or performing the Work or its failure to comply with any of its obligations under the Contract, except such Liability caused by the active negligence, sole negligence, or willful misconduct of an Indemnitee. This indemnity requirement applies to any Liability arising from alleged defects in the content or manner of submission of Contractor's bid for the Contract. Contractor's failure or refusal to timely accept a tender of defense pursuant to this provision will be deemed a material breach of this Contract. City will timely notify Contractor upon receipt of any third-party claim relating to the Contract, as required by Public Contract Code Section 9201.

4.3 **Insurance.** No later than ten (10) days following issuance of the notice of award, Contractor is required to procure and provide proof of the insurance coverage required by this section in the form of certificates and endorsements. The required insurance must cover the activities of Contractor and its Subcontractors relating to or arising from the performance of the Work and must remain in full force and effect at all times during the period covered by the Contract until the date of recordation of the notice of completion. The coverages may be arranged under a single policy for the full limits required or by a combination of underlying policies with the balance provided by excess or "umbrella" policies, provided each such policy complies with the requirements set forth herein. All required insurance must be issued by a company licensed to do business in the State of California, and each such insurer must have an A.M. Best's financial strength rating of "A" or better and a financial size rating of "VIII" or better. If Contractor fails to provide any of the required coverage in full compliance with the requirements of the Contract Documents, City may, at its sole discretion, purchase such coverage at Contractor's expense and deduct the cost from payments due to Contractor, or terminate the Contract for default. Contractor further understands that City reserves the right to modify the insurance requirements set forth herein, with thirty (30) days' notice provided to Contractor, at any time as deemed necessary to protect the interests of City.

(A) **Policies and Limits.** The following insurance policies and limits are required for this Contract unless otherwise specified in the Special Conditions:

(1) **Commercial General Liability Insurance ("CGL").** Contractor shall maintain CGL and must include coverage for

liability arising from Contractor's or its Subcontractor's acts or omissions in the performance of the Work against claims and liabilities for personal injury, death, or property damage providing protection in the minimum amount of: (i) three million dollars ($3,000,000.00) combined single limit each occurrence and either a general aggregate limit of five million dollars ($5,000,000.00) or a general aggregate limit of three million dollars ($3,000,000.00) as applied on a "per project" or "per location" basis, or (ii) the maximum amount of such insurance available to Contractor under Contractor's combined insurance policies (including any excess or "umbrella" policies), whichever is greater.

a. CGL policy may not exclude explosion, collapse, underground excavation hazard, or removal of lateral support.

b. CGL policy must include contractor's protected coverage, blanket contractual, and completed operations.

(2) **Builder's Risk Insurance***:* The Builder's Risk Insurance policy must be issued on occurrence basis, for all-risk coverage (including Flood and Earthquake) on a one hundred percent (100%) completed value basis on the insurable portion of the Project for the benefit of City.

(3) **Workers' Compensation Insurance and Employer's Liability***:* Contractor shall maintain Workers Compensation coverage, as required by law. The policy must comply with the requirements of the California Workers' Compensation Insurance and Safety Act and provide protection in the minimum amount of: (i) One Million Dollars ($1,000,000.00) for any one accident or occurrence, or (ii) the maximum amount of such insurance available to Contractor under Contractor's combined insurance policies (including any excess or "umbrella" policies), whichever is greater.. If Contractor is self-insured, Contractor must provide its Certificate of Permission to Self-Insure, duly authorized by the Department of Industrial Relations.

(4) **Automobile Liability**: Contractor shall maintain Automobile Liability covering all owned, non-owned and hired automobiles (if Contractor does not own automobiles, then Contractor shall maintain Hired/Non-owned Automobile Liability) against claims and liabilities for personal injury, death, or property damage providing protection in the minimum amount of: (i) One Million

Dollars ($1,000,000.00) combined single limit, or (ii) the maximum amount of such insurance available to Contractor under Contractor's combined insurance policies (including any excess or "umbrella" policies), whichever is greater.

(5) **Pollution (Environmental) Liability**: Because the performance of Contractor's work or service under this Contract involves hazardous materials, contaminated soil disposal, and/or a risk of accidental release of fuel oil, chemicals or other toxic gases or hazardous materials, Contractor shall procure and maintain Pollution Liability covering Contractor's liability for bodily injury, property damage and environmental damage resulting from pollution and related cleanup costs arising out of the work or services to be performed under this Contract. Coverage shall be provided for both works performed on site, as well as during the transport of hazardous materials. Such coverage shall be in the minimum amount of: (i) One Million Dollars ($1,000,000.00) for any one accident or occurrence, or (ii) the maximum amount of such insurance available to Contractor under Contractor's combined insurance policies (including any excess or "umbrella" policies), whichever is greater.

(B) **Required Endorsements.** Contractor must provide proof of the following endorsements, listed for each policy for which endorsements are required, as outlined below:

(1) For all Policies except Builder's Risk and Professional Liability:

a. "Waiver of Subrogation" endorsements providing that the carrier agrees to waive any right of subrogation it may have against the City of Morgan Hill and the City's elected or appointed officials, boards, agencies, officers, agents, employees, and volunteers.

(2) General Liability, Automobile, and Pollution Liability:

a. "Additionally Insured" endorsements naming the City of Morgan Hill, its elected or appointed officials, boards, agencies, officers, agents, employees, and volunteers as additional insureds;

b. "Primary and Non-Contributing" endorsements stating that the policy is primary non-contributing;

(3) General Liability:

a. “Separation of Insureds” endorsements stating that the inclusion of more than one insured will not operate to impair the rights of one insured against another, and the coverages afforded will apply as though separate policies have been issued to each insured.

(C) **Subcontractors.** Contractor must ensure that each Subcontractor is required to maintain the same insurance coverage required under this Section 4.3, with respect to its performance of Work on the Project, including those requirements related to the additional insureds and waiver of subrogation.

(D) **Certificates**. Contractor must furnish City with copies of all policies or certificates as outlined herein, whether new or modified, promptly upon receipt. No policy subject to Contractor’s Contract with City shall be reduced, canceled, allowed to expire, or materially changed except after thirty (30) days' notice by the insurer to City, unless due to non-payment of premiums, in which case ten (10) days written notice must be made to City. Certificates, including renewal certificates, may be mailed electronically to riskmgmt@morganhill.ca.gov or delivered to the Certificate Holder address as follows:

City of Morgan Hill
Attn: Risk Management
17575 Peak Avenue
Morgan Hill, CA 95037

4.4 Warranty Bond. As a condition precedent to Final Completion, Contractor must submit a warranty bond, using the form provided by City, to guarantee its Work as specified in Article 11, Completion and Warranty Procedures. The warranty bond must be issued by a surety admitted in California for fifty percent (50%) of the final Contract Price or as otherwise specified in the Contract Documents. If an issuing surety cancels the bond or becomes insolvent, within seven (7) days following written notice from City, Contractor must substitute a surety acceptable to City.

Article 5
Contract Time

5.1 Time is of the Essence. Time is of the essence in Contractor’s performance and completion of the Work, and Contractor must diligently prosecute the Work and complete it within the Contract Time.

(A) ***General.*** Contractor must commence the Work on the date indicated in the notice to proceed, and must fully complete the Work, in strict compliance with all requirements of the Contract Documents, and within the Contract Time.

(B) ***Rate of Progress.*** Contractor and its Subcontractors must, at all times, provide workers, materials, and equipment sufficient to maintain the rate of progress necessary to ensure full completion of the Work within the Contract Time. If City determines that Contractor is failing to prosecute the Work at a sufficient rate of progress, City may, in its sole discretion, direct Contractor to provide additional workers, materials, or equipment, or to work additional hours or days without additional cost to City, in order to achieve a rate of progress satisfactory to City. If Contractor fails to comply with City's directive in this regard, City may, at Contractor's expense, separately contract for additional workers, materials, or equipment or use City's own forces to achieve the necessary rate of progress. Alternatively, City may terminate the Contract based on Contractor's default.

5.2 Schedule Requirements. All schedules must be prepared using standard scheduling software acceptable to City and must provide schedules in electronic and paper form as requested.

(A) ***As-Planned (Baseline) Schedule.*** Within fifteen (15) calendar days following issuance of the notice of award (or as otherwise specified in the Special Conditions), Contractor must submit to City for review and approval an as-planned (baseline) schedule showing in detail how Contractor plans to perform and fully complete the Work within the Contract Time using critical path methodology. The as-planned schedule must include the work of all trades required for the Work and must be sufficiently comprehensive and detailed to enable progress to be monitored on a day-by-day basis. For each activity, the as-planned schedule must be dated, provided in the format specified in the Contract Documents or as required by City, and must include, at a minimum, a description of the activity, the start and completion dates, and the duration.

(B) ***Progress Schedules.*** Contractor must submit an updated progress schedule and three (3) week look-ahead schedule, in the format specified by City, for review and approval with each application for a progress payment. The progress schedule must show how the actual progress of the Work to date compared to the as planned schedule and must identify any actual or potential impacts to the critical path.

(C) ***Recovery Schedule.*** If City determines that the Work is more than one (1) week behind schedule, within seven (7) days following written notice of such determination, Contractor must submit a recovery schedule,

showing how Contractor intends to perform and complete the Work within the Contract Time, based on actual progress to date.

(D) ***Effect of Approval.*** Contractor and its Subcontractors must perform the Work in accordance with the most current approved schedule unless otherwise directed by City. City approval of a schedule does not operate to extend the time for completion of the Work or any component of the Work and will not affect City's right to assess liquidated damages for Contractor's unexcused delay in completing the Work within the Contract Time.

(E) ***Posting.*** Contractor must at all times maintain a copy of the most current approved progress or recovery schedule posted prominently in its on-site office.

(F) ***Reservation of Rights.*** City reserves the right to direct the sequence in which the Work must be performed or to make changes in the sequence of the Work in order to facilitate the performance of work by City or others, or to facilitate City's use of its property. The Contract Time or Contract Price may be adjusted to the extent such changes in sequence actually increase or decrease Contractor's time or cost to perform the Work.

(G) ***Authorized Working Days and Times.*** Contractor is limited to working Monday through Friday, excluding City of Morgan Hill-observed holidays, during City's normal business hours, except as expressly provided in the Special Conditions, or as authorized in writing by City. City reserves the right to charge Contractor for additional costs incurred by City due to Work performed on days or during hours not expressly authorized in these Contract Documents, including reimbursement of costs incurred for inspection, testing, and construction management services.

5.3 Delay and Extensions of Contract Time.

(A) ***Excusable Delay.*** The Contract Time may be extended if Contractor encounters an unavoidable delay in completing the Work within the Contract Time due to causes completely beyond Contractor's control, and which Contractor could not have avoided or mitigated through planning, foresight, and diligence ("Excusable Delay"). Grounds for Excusable Delay may include fire, earthquake, acts of terror or vandalism, epidemic, unforeseeable adverse government actions, unforeseeable actions of third parties, encountering unforeseeable hazardous materials, unforeseeable site conditions, suspension for convenience under Article 13, or unusually severe weather.

(B) ***Non-Excusable Delay.*** Excusable Delay does not include delay that is concurrent with non-Excusable Delay, and does not include delay caused by:

(1) weather conditions which are normal for the location of the Project, as determined by reliable records, including monthly rainfall averages, for the preceding ten (10) years;

(2) Contractor's failure to order equipment and materials sufficiently in advance of the time needed for timely completion of the Work;

(3) Contractor's failure to provide adequate notification to utility companies for connections or services necessary for the timely performance and completion of the Work;

(4) foreseeable conditions Contractor could have ascertained from reasonably diligent inspection of the Worksite or review of the Contract Documents; or

(5) Contractor's financial inability to perform the Work, including insufficient funds to pay its Subcontractors or suppliers.

(C) ***Request for Extension of Contract Time.*** A request for an extension of time and associated delay costs must be submitted in writing to City within ten (10) calendar days of the date the delay is first encountered, even if the duration of the delay is not yet known at that time, or will be deemed waived. In addition to complying with the requirements of this Article 5, the request must be submitted in compliance with the Change Order request procedures in Article 6, below. Strict compliance with these requirements is necessary to ensure that any delay or delay costs may be mitigated as soon as possible, and to facilitate cost-efficient administration of the Project and timely performance of the Work. Any request for an extension of time or delay costs that does not strictly comply with the requirements of Article 5 and Article 6 will be deemed waived.

(1) *Required Contents.* The request must include a detailed description of the cause(s) of the delay, and must also describe the measures that Contractor has taken to mitigate the delay and/or its effects, including efforts to mitigate the cost impact of the delay, e.g., by workforce management, change in sequencing, etc. If the delay is still ongoing at the time the request is submitted, the request should also include Contractor's plan for continued mitigation of the delay or its effects.

(2) *Delay Days and Costs.* The request must specify the number of days of Excusable Delay claimed or provide a realistic estimate if the duration of the delay is not yet known. The request must specify the amount of any delay-related costs that are claimed or provide a realistic estimate if the amount is not yet known. Any estimate of delay duration or cost must be updated in writing and submitted with all required supporting documentation as soon as the actual time and cost is known.

(3) *Supporting Documentation.* The request must also include any and all supporting documentation necessary to evidence the delay and its actual impacts, including schedule and cost impacts, including a time impact analysis using critical path methodology, and demonstrating unavoidable delay to Final Completion. The time impact analysis must be submitted in a form or format acceptable to City.

(4) *Burden of Proof.* Contractor has the burden of proving 1) that the delay was an Excusable Delay, as defined above, 2) that Contractor has made reasonable efforts to mitigate the delay and its schedule and cost impacts, 3) that the delay will unavoidably result in delaying Final Completion, and 4) that any delay costs claimed by Contractor were actually incurred and were reasonable under the circumstances.

(5) *Recoverable Costs.* If Contractor is granted an extension of time for Excusable Delay, recompense for delay costs will be limited to actual, direct, reasonable, and substantiated costs, and will not include home office overhead, or markup for overhead and profit.

(6) *Legal Compliance.* Nothing in this provision is intended to require the waiver, alteration, or limitation of the applicability of Public Contract Code Section 7102.

(7) *No Waiver.* Any grant of an extension of time or delay costs due to an Excusable Delay will not operate as a waiver of City's right to assess liquidated damages for unexcused delay.

(8) *Dispute Resolution.* In the event of a dispute over entitlement to an extension of time or delay costs, Contractor may not stop working pending resolution of the dispute, but must continue to comply with its duty to diligently prosecute the performance and timely completion of the Work. Contractor's sole recourse for an unresolved dispute based on City's rejection of a Change Order

request for an extension of time or delay costs is to comply with the Dispute Resolution provisions set forth in Article 12, below.

5.4 Liquidated Damages. It is expressly understood that if Final Completion is not achieved within the Contract Time, City will suffer damages which are difficult to determine and accurately specify. Pursuant to Public Contract Code section 7203, if Contractor fails to achieve Final Completion within the Contract Time, City will charge Contractor in the amount specified in the Contract for each day that Final Completion is delayed beyond the Contract Time, as liquidated damages and not as a penalty.

(A) ***Liquidated Damages.*** Liquidated damages will not be assessed for any Excusable Delay, as set forth above.

(B) ***Milestones.*** Liquidated damages will also be separately assessed for failure to meet milestones specified elsewhere in the Contract Documents.

(C) ***Setoff.*** City is entitled to set off the amount of liquidated damages assessed against any payments otherwise due to Contractor, including setoff against release of retention. If there are insufficient Contract funds remaining to cover the full amount of liquidated damages assessed, City is entitled to recover the balance from Contractor or its performance bond surety.

(D) ***Occupancy or Use.*** Occupancy or use of the Project in whole or in part prior to Final Completion does not constitute City's acceptance of the Project and will not operate as a waiver of City's right to assess liquidated damages for Contractor's unexcused delay in achieving Final Completion.

Article 6
Contract Modification

6.1 Changes in Work. City reserves the right to make changes in the Work without invalidating the Contract. City may direct or Contractor may request changes in the Work, and any such changes will be formalized in a Change Order, which may include commensurate changes in the Contract Price or Contract Time as applicable. Contractor must promptly comply with City-directed changes in the Work in accordance with the intent of the original Contract Documents, even if Contractor and City have not yet reached agreement as to adjustments to the Contract Price or Contract Time.

(A) ***City-Directed Change.*** In the event of a dispute over entitlement to or the amount of a change in Contract Time or a change in Contract Price related to an City-directed change, Contractor must perform the Work as directed and may not delay its work or cease work pending resolution of the dispute, but must continue to comply with its duty to diligently prosecute the performance and timely completion of the Work, including the Work in dispute.

(B) ***Contractor's Obligations.*** In the event that City and Contractor dispute whether a portion or portions of the Work are already required by the Contract Documents as opposed to changed or extra Work, Contractor must perform the Work as directed and may not delay its Work or cease Work pending resolution of the dispute, but must continue to comply with its duty to diligently prosecute the performance and timely completion of the Work, including the Work in dispute.

(C) ***Remedy for Non-Compliance.*** Contractor's failure to promptly comply with an City-directed change is deemed a material breach of the Contract, and in addition to all other remedies available to it, City may, at its sole discretion, hire another contractor or use its own forces to complete the disputed Work at Contractor's sole expense, and may deduct the cost from the Contract Price.

(D) ***Dispute Resolution.*** Contractor's sole recourse for an unresolved dispute related to changes in the Work is to comply with the dispute resolution provisions set forth in Article 12, below.

6.2 Contractor Change Order Requests. Contractor must submit a request or proposal for a change in the Work or a change in the Contract Price or Contract Time as a written Change Order request or proposal.

(A) ***Time for Submission.*** Any request for a change in the Contract Price must be submitted in writing to Project Manager within ten (10) calendar days of the date that Contractor first encounters the circumstances, information or conditions giving rise to the Change Order request, even if the total amount of the requested change in the Contract Price or impact on the Contract Time is not yet known at that time.

(B) ***Required Contents.*** Any Change Order request or proposal submitted by Contractor must include a complete breakdown of actual or estimated costs and credits, and must itemize labor, materials, equipment, taxes, insurance, and subcontract amounts. Any estimated cost must be updated in writing as soon as the actual amount is known.

(C) ***Required Documentation.*** All claimed costs must be fully documented, and any related request for an extension of time or delay-

related costs must be included at that time and in compliance with the requirements of Article 5 of the General Conditions.

(D) ***Required Form.*** Contractor must use City's form(s) for submitting all Change Order requests or proposals, unless otherwise specified by City.

(E) ***Certification.*** All Change Order requests must be signed by Contractor and must include the following certification:

> "The undersigned Contractor certifies under penalty of perjury that its statements and representations in this Change Order request are true and correct. Contractor warrants that this Change Order request is comprehensive and complete, and agrees that any costs, expenses, or time extension request not included herein is deemed waived. Contractor understands that submission of claims which have no basis in fact or which Contractor knows to be false may violate the False Claims Act, as set forth in Government Code Sections 12650 et seq."

6.3 Adjustments to Contract Price. The amount of any increase or decrease to the Contract Price will be determined based on one (1) of the following methods in the order provided:

(A) ***Unit Pricing.*** Amounts previously provided by Contractor in the form of unit prices, either in a bid schedule or schedule of values, will apply if unit pricing has previously been provided in Contractor's accepted bid schedule or schedule of values for the affected Work;

(B) ***Lump Sum.*** A mutually agreed upon lump sum;

(C) ***Time and Materials.*** On a time and materials basis, which may include a not-to-exceed limit, calculated as the total of the following sums:

(1) All direct labor costs plus fifteen percent (15%) for overhead and profit;

(2) All direct material costs, including sales tax, plus fifteen percent (15%) for overhead and profit;

(3) All direct plant and equipment rental costs, plus fifteen percent (15%) for overhead and profit;

(4) All direct subcontract costs plus ten percent (10%) for overhead and profit; and

(5) Increased bond or insurance premium costs computed at one- and one-half percent (1½%) of total of the previous four (4) sums.

6.4 Unilateral Change Order. If City disagrees with the amount of compensation or extension of time that Contractor has requested, City may elect to issue a unilateral Change Order, directing performance of the Work, and authorizing a change in the Contract Price or Contract Time in the amount City believes is merited. Contractor's sole recourse to dispute the terms of a unilateral Change Order is to submit a timely Claim pursuant to Article 12, below.

6.5 Non-Compliance Deemed Waiver. Contractor waives its entitlement to any increase in the Contract Price or Contract Time if Contractor fails to full comply with the provisions of this Article. Contractor will not be paid for unauthorized extra work.

Article 7
General Construction Provisions

7.1 Permits and Taxes.

(A) ***General.*** Contractor must obtain and pay for any and all permits, fees, or licenses required to perform the Work, unless otherwise indicated in the Contract Documents. Contractor must cooperate with and provide notifications to government agencies with jurisdiction over the Project, as may be required. Contractor must provide City with copies of all notices, permits, licenses, and renewals required for the Work.

**** The contractor will be responsible for securing the necessary building permit and encroachment permit for this project (no cost to the contractor). ****

(B) ***Federal Excise Tax.*** Contractor must pay for all taxes on labor, material and equipment, except Federal Excise Tax to the extent that City is exempt from Federal Excise Tax.

7.2 Temporary Facilities. Contractor must provide, at Contractor's sole expense, any and all temporary facilities, including onsite office, sanitary facilities, storage, scaffolds, barricades, walkways, and any other temporary structure required to safely perform the Work along with any utility services incidental thereto.

(A) ***Standards.*** Such structures must be safe and adequate for the intended use and installed and maintained in accordance with all applicable federal, state, and local laws, codes, and regulations.

(B) ***Removal and Repair.*** Contractor must promptly remove all such temporary facilities when they are no longer needed or upon completion of the Work, whichever comes first. Contractor must promptly repair any damage to City's property caused by the installation, use, or removal of the temporary facilities, and must promptly restore the property to its original or intended condition.

(C) ***Additional Requirements.*** Additional provisions pertaining to temporary facilities may be included in the Specifications or Special Conditions.

7.3 Signs. No signs may be displayed on or about City's property, except signage which is required by law or by the Contract Documents, without City's prior written approval as to content, size, design, and location.

7.4 Protection of Work and Property.

(A) ***General.*** Contractor is responsible at all times for protecting the Work and materials and equipment to be incorporated into the Work from damage until the Notice of Completion has been recorded. Except as specifically authorized by City, Contractor must confine its operations to the area of the Project site indicated in the Drawings. Contractor is liable for any damage caused to City's real or personal property, the real or personal property of adjacent property owners, or the work or personal property of other contractors working for City.

(B) ***Unforeseen Conditions.*** If Contractor encounters facilities, utilities, or other unknown conditions not shown on or reasonably inferable from the Drawings or apparent from inspection of the Project site, Contractor must promptly notify Project Manager, and must avoid taking any action which could cause damage to the facilities or utilities pending further direction from Project Manager. If Project Manager's subsequent direction to Contractor affects Contractor's cost or time to perform the Work, Contractor may submit a Change Order request as set forth in Article 6, above.

(C) ***Support; Adjacent Properties.*** Contractor must provide, install, and maintain all shoring, bracing, underpinning, etc., necessary to provide support to City's property and adjacent properties and improvements thereon. Contractor must provide notifications to adjacent property owners as may be required by law.

7.5 Noninterference. Contractor must take reasonable measures to avoid interfering with City's use of its property at or adjacent to the Project site,

including use of roadways, entrances, parking areas, walkways, and structures.

7.6 Materials and Equipment.

(A) ***General.*** Unless otherwise specified, all materials and equipment required for the Work must be new and of the best grade for the intended purpose, and furnished in sufficient quantities to ensure the proper and expeditious performance of the Work. Unless otherwise specified, all materials and equipment required for the Work are deemed to include all components required for complete installation and intended operation, and must be installed in accordance with the manufacturer's recommendation. Contractor is responsible for all shipping, handling, and storage costs associated with the materials and equipment required for the work and is responsible for protecting the Work and all of the required materials, supplies, tools and equipment at Contractor's sole cost until City accepts the Project.

(B) ***City-Provided.*** If the Work includes installation of materials or equipment to be provided by City, Contractor is solely responsible for the proper examination, handling, storage, and installation of such items in accordance with the Contract Documents. Contractor must promptly notify City of any defects discovered in City-provided materials or equipment. Contractor is solely responsible for any loss of or damage to such items which occurs while the items are in Contractor's custody and control, the cost of which may be offset from the Contract Price and deducted from any payment(s) due to Contractor.

(C) ***Intellectual Property Rights.*** Contractor must, at its sole expense, obtain any authorization required for use of patented or copyright protected materials, equipment, devices or processes that are incorporated into the Work. Contractor's indemnity obligation in Article 4, applies to any claimed violation of intellectual property rights in violation of this provision.

7.7 Substitutions.

(A) ***"Or Equal."*** Any specification designating a material, product, thing, or service by specific brand or trade name, followed by the words "or equal," is intended only to indicate quality and type of item desired, and Contractor may request use of any equal material, product, thing, or service.

(B) ***Request for Substitution.*** A request for substitution must be submitted to Project Manager for approval within the applicable time period provided in the Contract Documents. If no time period is specified,

the substitution request may be submitted any time within thirty five (35) days after the date of award of the Contract, or sufficiently in advance of the time needed to avoid delay of the Work, whichever is earlier.

(C) ***Substantiation.*** All data substantiating the proposed substitute as an "equal" item must be submitted with the written request for substitution. Contractor's failure to timely provide necessary substantiation is ground for rejection of the proposed substitution, without further review.

(D) ***Burden of Proving Equality.*** Contractor has the burden of proving the equality of the proposed substitution. City has sole discretion to determine whether a proposed substitution is "equal," and City's determination is final.

(E) ***Approval or Rejection.*** If the proposed substitution is approved, Contractor is solely responsible for any additional costs associated with the substituted item(s). If the proposed substitution is rejected, Contractor must, without delay, install the item specified.

(F) ***Contractor's Obligations.*** City's review of a proposed substitution will not relieve Contractor from any of its obligations under the Contract Documents. In the event Contractor makes an unauthorized substitution, Contractor will be solely responsible for all resulting cost impacts, including the cost of removal and replacement and the impact to other design elements.

7.8 Testing and Inspection.

(A) ***General.*** All materials, equipment, and workmanship used in the Work are subject to inspection by Inspector at all times and locations during construction and/or fabrication. All manufacturers' application or installation instructions must be provided to the Inspector at least ten (10) days prior to the first such application or installation. Contractor must, at all times, make the Work available for inspection.

(B) ***Scheduling and Notification.*** Contractor must schedule all tests required by the Contract Documents in time to avoid any delay to the progress of the Work. Contractor must provide timely notice to all necessary parties as specified in the Contract Documents.

(C) ***Responsibility for Costs.*** City will bear the initial cost of testing to be performed by independent testing consultants retained by City, subject to the following exceptions:

(1) Contractor will be responsible for the costs of any subsequent tests which are required to substantiate compliance with the Contract Documents, and any associated remediation costs.

(2) Contractor will be responsible for inspection costs, at City's established rates, for inspection time lost because the Work is not ready, or Contractor fails to appear for a scheduled inspection.

(3) In addition, if any portion of the Work which is subject to testing is covered or concealed by Contractor prior to testing, Contractor will bear the cost of making that portion of the Work available for the testing required by the Contract Documents, and any associated repair or remediation costs.

(D) ***Contractor's Obligations.*** Any Work that fails to comply with the requirements of the Contract Documents must be promptly repaired, replaced, or corrected by Contractor, at Contractor's sole expense, even if that Work was previously inspected or included in a progress payment. Contractor is solely responsible for any delay occasioned by remediation of noncompliant Work. Inspection of the Work does not in any way relieve Contractor of its obligations to perform the Work as specified.

(E) ***Distant Locations.*** If required off-site testing or inspection must be conducted at a location more than 100 miles from the Project site, Contractor is solely responsible for the additional travel costs required for testing and/or inspection at such locations.

(F) ***Final Inspection.*** The provisions of this Section 7.8 apply to final inspection under Article 11, Completion and Warranty Provisions.

7.9 Clean up. Contractor must regularly remove debris and waste materials and maintain the Worksite in clean and neat condition.

(A) ***General.*** Prior to discontinuing work in an area, Contractor must clean the area and remove all rubbish along with its construction equipment, tools, machinery, waste and surplus materials. Contractor must, at all times, minimize and confine dust and debris resulting from construction activities.

(B) ***Completion.*** At the completion of the Work, Contractor must remove from the Worksite all of its equipment, tools, surplus materials, waste materials and debris. Before demobilizing from the Worksite, Contractor must ensure that all surfaces are cleaned, sealed, waxed, or finished as applicable, and that all marks, stains, paint splatters, and the like have been properly removed from the completed Work and the surrounding areas.

(C) ***Non-Compliance.*** If Contractor fails to commence compliance with its cleanup obligations within two (2) business days following written notification from City or its representative, City may undertake appropriate cleanup measures without further notice and the cost will be deducted from any amounts due or to become due Contractor.

7.10 Instructions and Manuals. Contractor must provide three (3) copies each of all instructions and manuals required by the Contract Documents, unless otherwise specified. These must be complete as to drawings, details, parts lists, performance data, and other information that may be required for City to easily maintain and service the materials and equipment installed for this Project.

(A) ***Submittal Requirements.*** All manufacturers' application or installation instructions must be provided to the Inspector at least ten (10) days prior to the first such application. The instructions and manuals, along with any required guarantees, must be delivered to City for review.

(B) ***Instruction of Personnel.*** Contractor or its Subcontractors must instruct City's personnel in the operation and maintenance of any complex equipment as a condition precedent to Final Completion, if required in the Contract Documents.

7.11 As-built Drawings. Contractor and its Subcontractors must maintain on the Worksite a separate complete set of the Drawings which will be used solely for the purpose of recording changes made in any portion of the Work in order to create accurate record drawings at the end of the Project.

(A) ***Duty to Update.*** The as-built drawings must be updated as changes occur, on a daily basis if necessary. Progress payments may be delayed, in whole or in part, until the as-built drawings are brought up to date to the satisfaction of City. Actual locations to scale must be identified on the as-built drawings for all runs of mechanical and electrical work, including all site utilities, etc., installed underground, in walls, floors, or otherwise concealed. Deviations from the original Drawings must be shown in detail. The location of all main runs, whether piping, conduit, ductwork, drain lines, etc., must be shown by dimension and elevation.

(B) ***Final Completion.*** Contractor must verify that all changes in the Work are depicted in the as-built drawings and must deliver the complete set of as-built drawings to City for review and approval as a condition precedent to Final Completion.

7.12 Existing Utilities. As required by Government Code Section 4215, if, during the performance of the Work, Contractor discovers utility facilities

not identified by City in the Contract Documents, Contractor must immediately provide written notice to City and the utility. City assumes responsibility for the timely removal, relocation, or protection of existing main or trunkline utility facilities located on the Project site, if those utilities are not identified in the Contract Documents. Contractor will be compensated in accordance with the provisions of the Contract Documents for the costs of locating, repairing damage not due to Contractor's failure to exercise reasonable care, and removing or relocating such utility facilities not indicated in the Drawings or Specifications with reasonable accuracy, and for equipment on the Project necessarily idled during such work. Contractor will not be assessed liquidated damages for delay in completion of the Work, to the extent such delay was caused by City's failure to provide for removal or relocation of the utility facilities.

7.13 Notice of Excavation. Government Code Section 4216.2, requires that except in an emergency, Contractor must contact the appropriate regional notification center, or Underground Services Alert at 800-642-2444 (for Northern California), at least two (2) working days, but not more than fourteen (14) calendar days before starting any excavation if the excavation will be conducted in an area that is known, or reasonably should be known, to contain subsurface installations, and if practical, Contractor must delineate with white paint or other suitable markings the area to be excavated.

7.14 Trenching and Excavations.

(A) ***Duty to Notify.*** Contractor must promptly, and before the following conditions are disturbed, provide written notice to City if Contractor finds any of the following conditions:

(1) Material that Contractor believes may be a hazardous waste, as defined in Section 25117 of the Health and Safety Code, that is required to be removed to a Class I, Class II, or Class III disposal site in accordance with the provisions of existing law;

(2) Subsurface or latent physical conditions at the Worksite differing from those indicated by information about the Worksite made available to bidders prior to the deadline for submitting bids; or

(3) Unknown physical conditions at the Worksite of any unusual nature, materially different from those ordinarily encountered and generally recognized as inherent in work of the character required by the Contract Documents.

(B) ***City Investigation.*** City will promptly investigate the conditions and if City finds that the conditions do materially differ or do involve hazardous waste, and cause a decrease or increase in Contractor's cost of, or the time required for, performance of any part of the Work, City will issue a Change Order.

(C) ***Disputes.*** In the event that a dispute arises between City and Contractor regarding any of the conditions specified in subsection (A) above, Contractor will not be excused from any scheduled completion date provided for in the Contract Documents, but must proceed with all Work to be performed under the Contract. Contractor will retain any and all rights provided either by the Contract or by law which pertain to the resolution of disputes between Contractor and City.

7.15 Trenching of Five Feet or More. As required by Labor Code Section 6705, if the Contract Price exceeds Twenty Five Thousand Dollars ($25,000.00) and the Work includes the excavation of any trench or trenches of five (5) feet or more in depth, a detailed plan must be submitted to City or its civil or structural engineer, for acceptance in advance of the excavation. The detailed plan must show the design of shoring, bracing, sloping, or other provisions to be made for worker protection from the hazard of caving ground during the excavation. If the plan varies from the shoring system standards, it must be prepared by a registered civil or structural engineer. Use of a shoring, sloping, or protective system less effective than that required by the Construction Safety Orders is prohibited.

7.16 New Utility Connections. City will pay connection charges and meter costs for new permanent utilities required by the Contract Documents, if any. Contractor must notify City sufficiently in advance of the time needed to request service from each utility provider so that connections and services are initiated in accordance with the Project schedule.

7.17 Lines and Grades. Contractor is required to use any benchmark provided by the Engineer. Unless otherwise specified in the Contract Documents, Contractor must provide all lines and grades required to execute the Work.

7.18 Historic or Archeological Items.

(A) ***Contractor's Obligations.*** Contractor must ensure that all persons performing Work at the Project site are required to immediately notify Project Manager, upon discovery of any potential historic or archeological items, including historic or prehistoric ruins, burial grounds, archaeological or vertebrate paleontological site, including fossilized

footprints or other archeological, paleontological or historical feature on the Project site (collectively, "Historic or Archeological Items").

(B) ***Discovery; Cessation of Work.*** Upon discovery of any potential Historic or Archeological Items, Work must be stopped within an eighty-five (85) foot radius of the find and may not resume until authorized in writing by City. If required by City, Contractor must assist in protecting or recovering the Historic or Archeological Items, any such assistance to be compensated as extra work on a time and materials basis under Article 6, Contract Modification. Any suspension of Work required due to discovery of Historic or Archeological Items will be treated as a suspension for convenience under Article 13.

7.19 Environmental Control. Contractor must not pollute any drainage course or its tributary inlets with fuels, oils, bitumens, acids, insecticides, herbicides or other harmful materials. Contractor and its Subcontractors must at all times in the performance of the Work comply with all applicable federal, state, and local laws and regulations concerning pollution of waterways.

(A) ***Stormwater Permit.*** Contractor must comply with all applicable conditions of the State Water Resources Control Board National Pollutant Discharge Elimination System General Permit for Waste Discharge Requirements for Discharges of Stormwater Runoff Associated with Construction Activity ("Stormwater Permit").

(B) ***Contractor's Obligations.*** If required for the Work, a copy of the Stormwater Permit is on file in City's principal administrative offices, and Contractor must comply with the same without adjustment of the Contract Price or the Contract Time. Contractor must timely and completely submit required reports and monitoring information required by the conditions of the Stormwater Permit, Contractor must comply with all other applicable state, municipal or regional laws, ordinances, rules or regulations governing discharge of stormwater, including applicable municipal stormwater management programs.

Article 8
Payment

8.1 Schedule of Values. Prior to submitting its first application for payment, Contractor must prepare and submit to Project Manager a schedule of values apportioned to the various divisions and phases of the Work. Each line item contained in the schedule of values must be assigned a value such that the total of all items equals the Contract Price. The items must be sufficiently detailed to enable accurate evaluation of the percentage of completion claimed in each application for payment, and the assigned

value consistent with any itemized or unit pricing submitted with Contractor's bid.

8.2 Progress Payments. Following the last day of each month, or as otherwise required by the Special Conditions or Specifications, Contractor will submit to Project Manager a monthly application for payment for Work performed during the preceding month based on the estimated value of the Work performed during that preceding month.

(A) ***Application for Payment.*** Each application for payment must be itemized to include labor, materials, and equipment incorporated into the Work, and materials and equipment delivered to the Worksite, as well as authorized and approved Change Orders. Each pay application must be supported by Contractor's schedule of values and any other substantiating data required by the Contract Documents.
Each application for payment shall be accompanied by completed "Contract Balance Form," a copy of which is provided at the end of Article 8.

(B) ***Payment of Undisputed Amounts.*** City will pay the undisputed amount due, as certified the Design Professional, within thirty (30) days after Contractor has submitted a complete and accurate payment application, subject to Public Contract Code Section 20104.50. City will deduct a percentage from each progress payment as retention, as set forth in Section 8.5, below, and may deduct additional amounts as set forth in Section 8.3, below.

8.3 Adjustment of Payment Application. City may adjust or reject a payment application, including application for Final Payment, in whole or in part, based upon any of the circumstances listed below. Contractor will be notified in writing of the basis for the adjustment and will be promptly paid once the basis for that adjustment has been remedied and no longer exists.

(A) Contractor's unexcused failure to perform the Work as required by the Contract Documents, including correction or completion of punch list items;

(B) Loss or damage caused by Contractor or its Subcontractor(s) arising out of or relating to performance of the Work;

(C) Contractor's failure to pay its Subcontractors and suppliers when payment is due;

(D) Failure to timely correct rejected, nonconforming, or defective Work;

(E) Unexcused delay in performance of the Work;

(F) Any unreleased stop notice, retained as one hundred twenty five percent (125%) of the amount claimed;

(G) Failure to submit any required schedule or schedule update in the manner and within the time specified in the Contract Documents:

(H) Failure to maintain or submit as-built documents in the manner and within the time specified in the Contract Documents;

(I) Work performed without approved Shop Drawings, when approved Shop Drawings are required before proceeding with the Work;

(J) Contractor's payroll records are delinquent or inadequate; and

(K) Any other costs or charges that may be offset against payments due, as provided in the Contract Documents, including liquidated damages.

8.4 Acceptance of Work. Neither City's payment of progress payments nor its partial or full use or occupancy of the Project constitutes acceptance of any part of the Work.

8.5 Retention. City will retain five percent (5%) of the amount due on each progress payment, or the percentage stated in the Notice Inviting Bids, whichever is greater, as retention to ensure full and satisfactory performance of the Work.

(A) ***Substitution of Securities.*** As provided by Public Contract Code Section 22300, Contractor may request in writing that it be allowed, at its sole expense, to substitute securities for the retention withheld by City. Any escrow agreement entered into pursuant to this provision must fully comply with Public Contract Code Section 22300, and will be subject to approval as to form by City's legal counsel.

(B) ***Release of Undisputed Retention.*** All undisputed retention, less any amounts that may be assessed as liquidated damages, retained for stop notices, or otherwise withheld under Section 8.3 or 8.6 will be released as Final Payment to Contractor no sooner than thirty five (35) days following recordation of the notice of completion, and no later than sixty (60) days following acceptance of the Project by City's governing body or authorized designee, or, if the Project has not been accepted, no later than sixty (60) days after the Project is otherwise considered complete under Public Contract Code Section 7107(c).

8.6 Setoff. City is entitled to set off any amounts due from Contractor against any payments due to Contractor. City's entitlement to setoff includes progress payments as well as Final Payment and release of retention.

8.7 Payment to Subcontractors and Suppliers. Each month, Contractor must promptly pay each Subcontractor and supplier the value of the portion of labor, materials, and equipment incorporated into the Work or delivered to the Worksite by the Subcontractor or supplier during the preceding month. Such payments must be made in accordance with the requirements of the law, and those of the Contract Documents and applicable subcontract or supplier contract.

(A) ***Withholding for Stop Notice.*** City will withhold one hundred twenty five percent (125%) of the amount claimed by an unreleased stop notice, a portion of which may be retained by City for the costs incurred in handling the stop notice claim, including attorneys' fees and costs, as authorized by law.

(B) ***Joint Checks.*** City reserves the right to issue joint checks made payable to Contractor and its Subcontractors or suppliers. As a condition to release of payment by a joint check, the joint check payees may be required to execute a joint check agreement in a form provided or approved by City. The joint check payees will be jointly and severally responsible for the allocation and disbursement of funds paid by joint check. Payment by joint check will not be construed to create a contractual relationship between City and a Subcontractor or supplier of any tier beyond the scope of the joint check agreement.

8.8 Final Payment. Final Completion, acceptance of the Work by City, and recordation of the Notice of Completion, and any release required by the Contract Documents are conditions precedent to Final Payment and release of undisputed retention, as set forth above. Contractor's application for Final Payment must comply with the requirements for submitting an application for a progress payment as stated in Section 8.2, above. Corrections to previous progress payments, including adjustments to estimated quantities for unit priced items, may be included in the Final Payment. The date of Final Payment is deemed to be effective on the date that City acts to release retention as final payment to Contractor, or otherwise provides written notice to Contractor of Final Payment. If the amount due from Contractor to City exceeds the amount of Final Payment, City retains the right to recover the balance from Contractor or its sureties.

8.9 Release of Claims. City may, at any time, require that payment of the undisputed portion of any progress payment or Final Payment be contingent upon Contractor furnishing City with a written release of all

claims against City arising from or related to the portion of Work covered by those undisputed amounts. Any disputed amounts may be specifically excluded from the release.

8.10 Warranty of Title. Contractor warrants that title to all work, materials, or equipment incorporated into the Work and included in a request for payment will pass over to City free of any claims, liens, or encumbrances upon payment to Contractor.

CONTRACT BALANCE FORM

MORGAN HILL LIBRARY ADDITION

Note: A detailed invoice MUST be attached to this Contract Balance Form.

CONTRACTOR NAME: _____ DATE: _____

MAILING ADDRESS: _____ TELEPHONE NO.: _____

_____ FAX NO.: _____

_____ PROJECT NO.: _____

INVOICE NO.: _____

---

1. ORIGINAL CONTRACT AMOUNT: $_____

2. APPROVED CHANGE ORDERS TOTAL: $_____

3. REVISED CONTRACT AMOUNT: (1+2) $_____

4. PREVIOUS BALANCE PAID: $_____

5. REMAINING BALANCE: (3-4) $_____

6. CURRENT PROGRESS PAYMENT DUE: $_____
   (before retention)

7. 5% RETENTION FROM WORK DONE: (-)$_____

8. CURRENT BALANCE DUE: (6-7) $_____

9. REMAINING BALANCE OF REVISED CONTRACT AMOUNT: (5-8) $_____
   (including retention)

Article 9
Labor Provisions

9.1 Discrimination Prohibited. Discrimination against any prospective or present employee engaged in the Work on grounds of race, color, ancestry, national origin, ethnicity, religion, sex, sexual orientation, age, disability, or marital status is strictly prohibited. Contractor and its Subcontractors are required to comply with all applicable Federal and California laws including the California Fair Employment and Housing Act (Government Code Sections 12900 et seq.), Government Code Section 11135, and Labor Code Sections 1735, 1777.5, 1777.6, and 3077.5.

9.2 Labor Code Requirements.

(A) ***Eight Hour Day.*** Under Labor Code Section 1810, eight (8) hours of labor constitute a legal day's work under this Contract.

(B) ***Penalty.*** Under Labor Code Section 1813, Contractor will forfeit to City as a penalty, the sum of $25.00 for each day during which a worker employed by Contractor or any Subcontractor is required or permitted to work more than eight (8) hours in any one (1) calendar day or more than forty (40) hours per calendar week, except if such workers are paid overtime under Labor Code Section 1815.

(C) ***Apprentices.*** Contractor is responsible for compliance with the requirements governing employment and payment of apprentices, as set forth in Labor Code Section 1777.5, which is fully incorporated by reference.

(D) ***Notices.*** Under Labor Code Section 1771.4, Contractor is required to post all job site notices prescribed by law or regulation.

9.3 Prevailing Wages. Each worker performing Work under this Contract that is covered under Labor Code Section 1720, including cleanup at the Project site, must be paid at a rate not less than the prevailing wage as defined in Sections 1771 and 1774 of the Labor Code. The prevailing wage rates are available online at http://www.dir.ca.gov/dlsr. Contractor must post a copy of the applicable prevailing rates at the Worksite.

(A) ***Penalties.*** Under Labor Code Section 1775, Contractor and any Subcontractor will forfeit to City as a penalty up to Two Hundred Dollars ($200.00) for each calendar day, or portion a day, for each worker paid less than the applicable prevailing wage rate. Contractor must also pay each worker the difference between the applicable prevailing wage rate and the amount actually paid to that worker.

(B) ***Federal Requirements.*** If this Project is subject to Federal prevailing wage requirements in addition to California prevailing wage requirements, Contractor and its Subcontractors are required to pay the higher of the current applicable prevailing wage rates under federal law, available online at http://www.access.gpo.gov/davisbacon/ca.html.

9.4 Payroll Records. Contractor must comply with the provisions of Labor Code Sections 1776 and 1812 and all implementing regulations, which are fully incorporated by this reference, including requirements for electronic submission of payroll records.

(A) ***Contractor and Subcontractor Obligations***. Contractor and each Subcontractor must keep accurate payroll records, showing the name, address, social security number, work classification, straight time and overtime hours worked each day and week, and the actual per diem wages paid to each journeyman, apprentice, worker, or other employee employed in connection with the Work. Each payroll record must contain or be verified by a written declaration that it is made under penalty of perjury, stating both of the following:

(1) The information contained in the payroll record is true and correct.

(2) Contractor or Subcontractor has complied with the requirements of Labor Code Sections 1771, 1811, and 1815 for any Work performed by its employees on the Project.

(B) ***Certified Record.*** A certified copy of an employee's payroll record must be made available for inspection or furnished to the employee or his or her authorized representative on request, to City, or to the Division of Labor Standards Enforcement, and the Division of Apprenticeship Standards of the Department of Industrial Relations, and as further provided by the Labor Code.

(C) ***Enforcement.*** Upon notice of noncompliance with Labor Code Section 1776, Contractor or Subcontractor has ten (10) days in which to comply with requirements of this section. If Contractor or Subcontractor fails to do so within the ten (10) day period, Contractor or Subcontractor will forfeit a penalty of One Hundred Dollars ($100.00) per day, or portion a day, for each worker for whom compliance is required, until strict compliance is achieved. Upon request by the Division of Apprenticeship Standards, or the Division of Labor Standards Enforcement, these penalties will be withheld from progress payments then due.

9.5 Labor Compliance. Under Labor Code section 1771.4, the Contract for this Project is subject to compliance monitoring and enforcement by the California Department of Industrial Relations.

9.6 Wage Theft Prevention. Compliance with Wage and Hour Laws: Contractor, and any subcontractor it employs to complete work under this Agreement, shall comply with all applicable federal, state and local wage and hour laws. Applicable laws may include, but are not limited to, the Federal Fair Labor Standards Act and the California Labor Code.

Final Judgments, Decisions, and Orders: For purposes of this Section, a "final judgment, decision, or order" refers to one for which all appeals have been exhausted or the time to appeal has expired. Relevant investigatory government agencies include: the federal Department of Labor, the California Division of Labor Standards Enforcement, or any other governmental entity or division tasked with the investigation and enforcement of wage and hour laws.

Prior Judgments against Contractor and/or its Subcontractors: BY SIGNING THIS AGREEMENT, CONTRACTOR AFFIRMS THAT IT HAS DISCLOSED ANY FINAL JUDGMENTS, DECISIONS OR ORDERS FROM A COURT OR INVESTIGATORY GOVERNMENT AGENCY FINDING – IN THE FIVE (5) YEARS PRIOR TO EXECUTING THIS AGREEMENT – THAT CONTRACTOR OR ITS SUBCONTRACTOR(S) HAS VIOLATED ANY APPLICABLE WAGE AND HOUR LAWS. CONTRACTOR FURTHER AFFIRMS THAT IT OR ITS SUBCONTRACTOR(S) HAS SATISFIED AND COMPLIED WITH – OR HAS REACHED AGREEMENT WITH THE CITY REGARDING THE MANNER IN WHICH IT WILL SATISFY – ANY SUCH JUDGMENTS, DECISIONS OR ORDERS.

Judgments or Decisions During Term of Contract: If at any time during the term of this Agreement, a court or investigatory government agency issues a final judgment, decision or order finding that Contractor or an subcontractor it employs to perform work under this Agreement has violated any applicable wage and hour law, or Contractor learns of such a judgment, decision, or order that was not previously disclosed, Contractor shall inform the City Attorney, no more than fifteen (15) days after the judgment, decision or order becomes final or of learning of the final judgment, decision or order. Contractor and its subcontractors shall promptly satisfy and comply with any such judgment, decision, or order, and shall provide the City Attorney with documentary evidence of compliance with the final judgment, decision or order within five (5) days of satisfying the final judgment, decision or order. The City reserves the right to require Contractor to enter into an agreement with the City regarding the manner in which any such final judgment, decision, or order will be satisfied.

City's Right to Withhold Payment: Where Contractor or any subcontractor it employs to perform work under this Agreement has been found in violation of any

applicable wage and hour law by a final judgment, decision or order of a court or government agency, the City reserves the right to withhold payment to Contractor until such judgment, decision or order has been satisfied in full.

Material Breach: Failure to comply with any part of this Section constitutes a material breach of this Agreement. Such breach may serve as a basis for immediate termination of this Agreement and/or any other remedies available under this Agreement and/or law.

Notice to City Related to Wage Theft Prevention: Notice provided to the City Attorney as required under this Section shall be addressed to: City Attorney, City of Morgan Hill, 17575 Peak Avenue, Morgan Hill, CA 95037. The Notice provisions of this Section are separate from any other notice provisions in this Agreement and, accordingly, only notice provided to the above address satisfies the notice requirements in this Section.

Article 10
Safety Provisions

10.1 Safety Precautions and Programs. Contractor and its Subcontractors are fully responsible for safety precautions and programs, and for the safety of persons and property in the performance of the Work. Contractor and its Subcontractors must comply with all applicable safety laws, rules and regulations and seek to avoid injury, loss, or damage to persons or property by taking reasonable steps to protect its employees and other persons at the Worksite, materials and equipment stored on or off site, and property at or adjacent to the Worksite.

(A) ***Reporting Requirements.*** Contractor must immediately provide a written report to City of all recordable accidents and injuries occurring at the Worksite. If Contractor is required to file an accident report with a government agency, Contractor will provide a copy of the report to City.

(B) ***Legal Compliance.*** Contractor's safety program must comply with the applicable legal and regulatory requirements. Contractor must provide City with copies of all notices required by law or regulation.

(C) ***Contractor's Obligations.*** Any damage or loss caused by Contractor arising from the Work which is not insured under property insurance must be promptly remedied by Contractor.

(D) ***Remedies.*** If City determines, in its sole discretion, that any part of the Work or Worksite is unsafe, City may, without assuming responsibility for Contractor's safety program, require Contractor or its Subcontractor to cease performance of the Work or to take corrective measures to City's

satisfaction. If Contractor fails to promptly take the required corrective measures, City may perform them and deduct the cost from the Contract Price. Contractor agrees it is not entitled to submit a Claim for damages, for an increase in Contract Price, or for a change in Contract Time based on Contractor's compliance with City's request for corrective measures pursuant to this provision.

10.2 Hazardous Materials. Unless otherwise specified, this Contract does not include the removal, handling, or disturbance of any asbestos or other Hazardous Materials. If Contractor encounters materials on the Worksite that Contractor reasonably believes to be asbestos or other Hazardous Materials, and the asbestos or other Hazardous Materials have not been rendered harmless, Contractor may continue Work in unaffected areas reasonably believed to be safe, but must immediately cease work on the area affected and report the condition to City. No asbestos, asbestos-containing products or other Hazardous Materials may be used in performance of the Work.

10.3 Material Safety. Contractor must maintain Material Safety Data Sheets ("MSDS") at the Worksite, as required by law, for materials or substances used or consumed in the performance of the Work. The MSDS will be accessible and available to Contractor's employees, Subcontractors, and City.

(A) ***Contractor Obligations.*** Contractor is solely responsible for the proper delivery, handling, use, storage, removal, and disposal of all materials brought to the Worksite and/or used in the performance of the Work.

(B) ***Labeling.*** Contractor must ensure proper labeling on any material brought onto the Worksite so that any persons working with or in the vicinity of the material may be informed as to the identity of the material, any potential hazards, and requirements for proper handling, protections, and disposal.

Article 11
Completion and Warranty Provisions

11.1 Final Completion.

(A) ***Final Inspection.*** When the Work required by this Contract is fully performed, Contractor must provide written notification to Project Manager requesting final inspection. Based on this inspection, the Design Professional will prepare a punch list of items that are incomplete, incorrectly installed, or not operating as required by the Contract Documents. The omission of any such item from this punch list will not

relieve Contractor from fulfilling all requirements of the Contract Documents.

(B) ***Punch List.*** City will promptly deliver the punch list to Contractor and will specify the time by which all of the punch list items must be completed or corrected. The punch list may include City's estimated cost to complete each punch list item if Contractor fails to do so within the specified time.

(C) ***Requirements for Final Completion.*** Final Completion will be achieved upon completion or correction of all punch list items, as verified by inspection, and upon satisfaction of all other Contract requirements, including any commissioning required under the Contract Documents, and submission of all final submittals, including a warranty bond as required under Section 4.4, instructions and manuals as required under Section 7.10, and as-built drawings as required under Section 7.11, all to City's satisfaction. Once Final Completion is achieved, and the Project has been formally accepted by City, City will file a notice of completion with the County Recorder.

(D) ***Final Payment.*** Final Payment and release of retention, less any sums withheld pursuant to the provisions of the Contract Documents, will not be made sooner than thirty-five (35) days after recordation of the notice of completion. If Contractor fails to complete all of the punch list items within the specified time, City may elect to accept the Project and record the notice of completion, and withhold up to one hundred fifty percent (150%) of City's estimated cost to complete the remaining items from Final Payment.

11.2 Warranty.

(A) ***General.*** Contractor warrants that all materials and equipment will be new unless otherwise specified, of good quality, in conformance with the Contract Documents, and free from defective workmanship and materials. Contractor further warrants that the Work will be free from material defects not intrinsic in the design or materials required in the Contract Documents. At City's request, Contractor must furnish satisfactory evidence of the quality and type of materials and equipment furnished. Contractor's warranty does not extend to damage caused by normal wear and tear, or improper use or maintenance.

(B) ***Warranty Period.*** Contractor's warranty must guarantee its Work for a period of one (1) year from the date of recordation of the notice of completion (the "Warranty Period"), except when a longer guarantee is provided by a supplier or manufacturer or is required by the Specifications or Special Conditions. Contractor must obtain from its Subcontractors,

suppliers and manufacturers any special or extended warranties required by the Contract Documents.

(C) ***Warranty Documents.*** As a condition precedent to acceptance, Contractor must supply City with all warranty and guarantee documents relevant to equipment and materials incorporated into the Work and guaranteed by their suppliers or manufacturers.

(D) ***Subcontractors.*** The warranty obligations in the Contract Documents apply to Work performed by Contractor and its Subcontractors, and Contractor expressly agrees to act as co-guarantor of such Work.

(E) ***Contractor's Obligations.*** Upon written notice from City to Contractor of any defect in the Work discovered during the Warranty Period, Contractor or its responsible Subcontractor must promptly correct the defective Work at its own cost. Contractor's obligation to correct defects discovered during the Warranty Period will continue past the expiration of the Warranty Period as to any defects in Work for which Contractor was notified prior to expiration of the Warranty Period.

(F) ***City's Remedies.*** If Contractor and/or its responsible Subcontractor fails to correct defective Work within ten (10) days following notice by City, or sooner, if required by the circumstances, Contractor expressly agrees that City may correct the defects to conform with Contract Documents at Contractor's sole expense, and Contractor agrees to reimburse City for its costs within thirty (30) days following City's submission of a demand for payment pursuant to this provision. If City is required to initiate legal action to compel Contractor's compliance with this provision, and City is the prevailing party in such action, Contractor is solely responsible for all of City's attorney's fees and legal costs expended to enforce Contractor's warranty obligations herein in addition to any and all costs incurred by City to correct the defective Work.

11.3 Use Prior to Final Completion. City reserves the right to occupy or make use of the Project, or any portions of the Project, prior to Final Completion if City has determined that the Project or portion of it is in a condition suitable for the proposed occupation or use, and that it is in its best interest to occupy or make use of the Project, or any portions of it, prior to Final Completion. City will notify Contractor in writing of its intent to occupy or make use of the Project or any portions of the Project, pursuant to this provision.

(A) ***Non-Waiver.*** Occupation or use prior to Final Completion will not operate as acceptance of the Work or any portion of it, nor will it operate as a waiver of any of City's rights or Contractor's duties pursuant to these

Contract Documents, and will not affect nor bear on the determination of the time of substantial completion with respect to any statute of repose pertaining to the time for filing an action for construction defect.

(B) ***City's Responsibility.*** City will be responsible for the cost of maintenance and repairs due to normal wear and tear with respect to those portions of the Project that are being occupied or used before final completion. The Contract Price or the Contract Time may be adjusted pursuant to the applicable provisions of these Contract Documents if, and only to the extent that, any occupation or use under this Section actually adds to Contractor's cost or time to perform the Work.

11.4 Substantial Completion. For purposes of determining "substantial completion" with respect to any statute of repose pertaining to the time for filing an action for construction defect, "substantial completion" is deemed to mean the last date that Contractor or any Subcontractor performs Work on the Project prior to recordation of the Notice of Completion, except for warranty work performed under this Article.

Article 12
Dispute Resolution

12.1 Claims. This Article applies to and provides the exclusive procedures for any Claim arising from or related to the Contract or performance of the Work.

(A) ***Definition.*** "Claim" means a separate demand by Contractor, submitted in writing, for change in the Contract Time or Contract Price that has previously been submitted to City in accordance with the requirements of the Contract Documents, and which has been rejected by City, in whole or in part.

(B) ***Limitations.*** A Claim may only include the portion of a previously rejected demand that remains in dispute between Contractor and City. With the exception of any dispute regarding the amount of money actually paid to Contractor as Final Payment, Contractor is not entitled to submit a Claim demanding a change in the Contract Time or the Contract Price, which has not previously been submitted to City in full compliance with Article 5 and Article 6, and subsequently rejected in whole or in part by City.

(C) ***Scope of Article.*** This Article is intended to provide the exclusive procedures for submission and resolution of Claims of any amount, and applies in addition to the provisions of Public Contract Code Section 9204 and Sections 20104 et seq.

(D) ***No Work Delay.*** Notwithstanding the submission of a Claim or any other dispute between the parties related to the Project or the Contract Documents, Contractor must perform the Work and may not delay or cease Work pending resolution of the Claim or other dispute, but must continue to diligently prosecute the performance and timely completion of the Work, including the Work pertaining to the Claim or other dispute.

12.2 Claims Submission. The following requirements apply to any Claim subject to this Article:

(A) ***Substantiation.*** The Claim must be submitted to City in writing, clearly identified as a "Claim" submitted pursuant to this Article 12, and must include all of the documents necessary to substantiate the Claim including the Change Order request that was rejected in whole or in part, and copy of the City's written rejection that is in dispute. The Claim must clearly identify and describe the dispute, including relevant references to applicable portions of the Contract Documents, and a chronology of relevant events. Any Claim for additional payment must include a complete, itemized breakdown of all labor, materials, taxes, insurance, and subcontract, or other costs. Substantiating documentation such as payroll records, receipts, invoices, or the like, must be submitted in support of each claimed cost. Any Claim for an extension of time or delay costs must be substantiated with schedule analysis and narrative depicting and explaining claimed time impacts.

(B) ***Claim Format.*** A Claim must be submitted in the following format:

(1) General introduction, specifically identifying the submission as a "Claim" submitted under this Article 12.

(2) Relevant background information, including identification of the specific demand at issue, and the date of City's rejection of that demand.

(3) Detailed explanation of the issue(s) in dispute. For multiple issues, separately number and identify each issue and include the following for each separate issue:

(a) The background of the issue, including references to relevant provisions of the Contract Documents;

(b) A succinct statement of the matter in dispute, including Contractor's position and the basis for that position;

(c) A chronology of relevant events;

(d) The identification and attachment of all supporting documents (see subsection (A), above, on Substantiation); and

(e) Use of a separate page for each issue.

(4) Summary of issues and damages.

(5) The following certification, executed by Contractor's authorized representative:

"The undersigned Contractor certifies under penalty of perjury that its statements and representations in this Claim are true and correct. Contractor warrants that this Claim is comprehensive and complete as to the matters in dispute, and agrees that any costs, expenses, or delay claim not included herein are deemed waived. Contractor understands that submission of a Claim which has no basis in fact or which Contractor knows to be false may violate the False Claims Act (Government Code Section 12650 et seq.)."

(C) ***Submission Deadlines.***

(1) A Claim must be submitted within fifteen (15) days following the date that City notified Contractor in writing that a request for a change in the Contract Time or Contract Price, duly submitted in compliance with Article 5 and Article 6, has been rejected in whole or in part.

(2) With the exception of any dispute regarding the amount of Final Payment, any Claim must be filed on or before the date of Final Payment, or will be deemed waived.

(3) A Claim disputing the amount of Final Payment must be submitted within fifteen (15) days of the effective date of Final Payment, under Section 8.8, above.

(4) Strict compliance with these Claim submission deadlines is necessary to ensure that any dispute may be mitigated as soon as possible, and to facilitate cost-efficient administration of the Project. Any Claim that is not submitted within the specified deadlines will be deemed waived by Contractor.

12.3 City's Response. City will respond within forty-five (45) days of receipt of the Claim with a written statement identifying which portion(s) of the Claim are disputed, unless the forty five (45)-day period is extended by mutual

agreement of City and Contractor. However, the City may first request, in writing, within thirty (30) days of receipt of the Claim, any additional documentation supporting the Claim or relating to defenses to the Claim that City may have against Contractor. If Contractor fails to submit the additional documentation to City within fifteen (15) days of receipt of City's request, the Claim will be deemed waived.

(A) ***Additional Information.*** If additional information is thereafter required, it may be requested and provided upon mutual agreement of City and Contractor.

(B) ***City's Response.*** City's written response to the Claim, as further documented, will be submitted to Contractor within fifteen (15) days after receipt of the further documentation or within a period of time no greater than that taken by Contractor in producing the additional information, whichever is greater.

(C) ***Non-Waiver.*** Any failure by City to respond within the times specified above may not be construed as acceptance of the Claim in whole or in part, or as a waiver of any provision of these Contract Documents.

12.4 Meet and Confer. If Contractor disputes City's written response, or City fails to respond within the specified time, Contractor must notify City in writing, either within fifteen (15) days of receipt of City's response, or within fifteen (15) days of City's failure to respond within the specified time, respectively, and demand an informal conference to meet and confer for settlement of the issues in dispute. If Contractor fails to dispute City's response, in writing, within the specified times, Contractor's Claim will be deemed waived.

(A) ***Schedule Meet and Confer.*** Upon receipt of the demand to meet and confer, City will schedule the meet and confer conference to be held within thirty (30) days, or later if needed to ensure the mutual availability of all of the individuals that each party requires to represent its interests at the meet and confer conference.

(B) ***Location for Meet and Confer.*** The meet and confer conference will be scheduled at a location at or near City's principal office.

(C) ***Written Statement After Meet and Confer.*** Within ten (10) working days after the meet and confer has concluded, City will issue a written statement identifying which portion(s) of the Claim remain in dispute, if any.

(D) ***Submission to Mediation.*** If the Claim or any portion remains in dispute following the meet and confer conference, within ten (10) working

days after the City issues the written statement identifying any portion(s) of the Claim remaining in dispute, the disputed portion(s) will be submitted for mediation as set forth below.

12.5 Mediation and Government Code Claims.

(A) ***Mediation.*** Mediation under this Article will be scheduled within sixty (60) days following conclusion of the meet and confer process, with a mediator that the parties mutually agreed upon. The mediation itself may take place more than sixty (60) days following conclusion of the meet and confer process to ensure the mutual availability of the selected mediator and all of the individuals that each party requires to represent its interests. The parties must share the costs of mediation equally, except costs incurred by each party for representation by legal counsel or any other consultant.

(B) ***Government Code Claims***.

(1) Timely presentment of a Government Code Claim is a condition precedent to filing any legal action based on or arising from the Contract.

(2) The time for filing a Government Code Claim will be tolled from the time Contractor submits its written Claim pursuant to Section 12.2, above, until the time that Claim is denied as a result of the meet and confer process, including any period of time used by the meet and confer process. If the parties agree to mediation, the time for filing a Government Code Claim will be tolled until conclusion of the mediation if the Claim is not fully resolved by mutual agreement of the parties during the mediation or any continuation of the mediation.

12.6 Tort Claims. This Article does not apply to tort claims and nothing in this Article is intended nor will be construed to change the time periods for filing tort-based Government Code Claims.

12.7 Arbitration. It is expressly agreed, under California Code of Civil Procedure Section 1296, that in any arbitration to resolve a dispute relating to this Contract, the arbitrator's award must be supported by law and substantial evidence.

12.8 Damages. Contractor bears the burden of proving entitlement to and the amount of any claimed damages. Contractor is not entitled to damages calculated on a total cost basis, but must prove actual damages. Contractor is not entitled to recovery of any alleged home office overhead. The Eichleay Formula or similar formula may not be used for any recovery

under the Contract. Contractor is not entitled to consequential damages, including home office overhead or any form of overhead not directly incurred at the Worksite; lost profits; loss of productivity; lost opportunity to work on other projects; diminished bonding capacity; increased cost of financing for the Project; extended capital costs; non-availability of labor, material or equipment due to delays; or any other indirect loss arising from the Contract.

12.9 Other Disputes. The procedures in this Article 12 will apply to any and all disputes or legal actions, in addition to Claims, arising from or related to this Contract, unless and only to the extent that compliance with a procedural requirement is expressly and specifically waived by City. Nothing in this Article is intended to delay suspension or termination under Article 13.

Article 13
Suspension and Termination

13.1 Suspension for Cause. In addition to all other remedies available to City, if Contractor fails to perform or correct work in accordance with the Contract Documents, City may immediately order the Work, or any portion of it, suspended until the cause for the suspension has been eliminated to City's satisfaction.

(A) ***Failure to Comply.*** Contractor will not be entitled to an increase in Contract Time or Contract Price for a suspension occasioned by Contractor's failure to comply with the Contract Documents.

(B) ***No Duty to Suspend.*** City's right to suspend the Work will not give rise to a duty to suspend the Work, and City's failure to suspend the Work will not constitute a defense to Contractor's failure to comply with the requirements of the Contract Documents.

13.2 Suspension for Convenience. City reserves the right to suspend, delay, or interrupt the performance of the Work in whole or in part, for a period of time determined to be appropriate for City's convenience, and not due to any act or omission by Contractor or its Subcontractors. Upon notice by City pursuant to this provision, Contractor must immediately suspend, delay, or interrupt the Work as directed by City. The Contract Price and the Contract Time will be equitably adjusted by Change Order to reflect the cost and delay impact occasioned by such suspension for convenience.

13.3 Termination for Default. Contractor may be deemed in default for a material breach of or inability to perform the Contract, including Contractor's refusal or failure to supply sufficient skilled workers, proper materials, or equipment to perform the Work within the Contract Time;

refusal or failure to make prompt payment to its employees, Subcontractors, or suppliers or to correct rejected work; disregard of laws, regulations, ordinances, rules, or orders of any public agency with jurisdiction over the Project; or if Contractor lacks financial capacity to complete the Work within the Contract Time; or is otherwise responsible for a material breach of the Contract requirements.

(A) ***Notice.*** Upon City's determination that Contractor is in default, City may provide Contractor and its surety written notice of default and intent to terminate the Contract.

(B) ***Termination.*** Within seven (7) calendar days after notice of intent to terminate for default has been given, unless the default is cured or arrangements to cure the default have been made and memorialized in writing, to City's satisfaction, City may terminate the Contract by written notice to Contractor with a copy to Contractor's surety.

(C) ***Waiver.*** Time being of the essence in the performance of the Work, if Contractor's surety fails to arrange for completion of the Work in accordance with the Performance Bond, within seven (7) calendar days from the date of the notice of termination, Contractor's surety will be deemed to have waived its right to complete the Work under the Contract, and City may immediately make arrangements for the completion of the Work through use of its own forces, by hiring a replacement contractor, or by any other means that City determines advisable under the circumstances. Contractor and its surety will be jointly and severally liable for any additional cost incurred by City to complete the Work following termination. In addition, City will have the right to use any materials, supplies, and equipment belonging to Contractor and located at the Worksite for the purposes of completing the remaining Work.

(D) ***Wrongful Termination.*** If a court of competent jurisdiction or an arbitrator later determines that the termination for default was wrongful, the termination will be deemed to be a termination for convenience, and Contractor's damages will be strictly limited to the compensation provided for termination for convenience, in Section 13.4, below. Contractor waives any claim for any other damages for wrongful termination including consequential damages, lost opportunity costs or lost profits.

13.4 Termination for Convenience. City reserves the right to terminate all or part of the Contract for convenience upon written notice to Contractor. Upon receipt of such notice, Contractor must immediately stop the Work, comply with City's instructions to protect the completed Work and materials, and use its best efforts to minimize further costs. In the event of termination for convenience, the parties agree that the following will

constitute full and fair compensation to Contractor, and that Contractor will not be entitled to any additional compensation:

(A) ***Completed Work.*** The value of its Work satisfactorily performed to date, including Project overhead and profit based on Contractor's schedule of values;

(B) ***Demobilization.*** Actual and substantiated demobilization costs; and

(C) ***Markup.*** Five percent (5%) of the total value of the Work performed as of the date of notice of termination or five percent (5%) of the value of the Work yet to be completed, whichever is less.

13.5 Provisions Remaining in Effect. Upon termination pursuant to this Article, the provisions of the Contract Documents remain in effect as to any claim, indemnity obligation, warranties, guarantees, submittals of as-built drawings, instructions, or manuals, or other such rights and obligations arising prior to the termination date.

Article 14
Miscellaneous Provisions

14.1 Assignment of Unfair Business Practice Claims. Under Public Contract Code Section 7103.5, Contractor and its Subcontractors agree to assign to City all rights, title, and interest in and to all causes of action it may have under Section 4 of the Clayton Act (15 U.S.C. Section 15) or under the Cartwright Act (Chapter 2 (commencing with Section 16700) of Part 2 of Division 7 of the Business and Professions Code), arising from purchases of goods, services, or materials pursuant to the Contract or subcontract. This assignment will be effective at the time City tenders Final Payment to Contractor, without further acknowledgement by the parties.

14.2 Provisions Deemed Inserted. Every provision of law required to be inserted in the Contract Documents is deemed to be inserted, and the Contract Documents will be construed and enforced as though such provision has been included. If it is discovered that through mistake or otherwise that any required provision was not inserted, or not correctly inserted, the Contract Documents will be amended accordingly.

14.3 Waiver. No waiver of a breach, failure of any condition, or any right or remedy contained in or granted by the provisions of the Contract Documents will be effective unless it is in writing and signed by the party waiving the breach, failure, right, or remedy. No waiver of any breach,

failure, right, or remedy will be deemed a waiver of any other breach, failure, right, or remedy, whether or not similar, nor will any waiver constitute a continuing waiver unless specified in writing by the waiving party.

14.4 Titles, Headings, and Groupings. The titles and headings used and the groupings of provisions in the Contract Documents are for convenience only and may not be used in the construction or interpretation of the Contract Documents or relied upon for any other purpose.

14.5 Statutory and Regulatory References. With respect to any amendments to any statutes or regulations referenced in these Contract Documents, the reference is deemed to be the version in effect on the date that that bids were due.

END OF GENERAL CONDITIONS

SPECIAL CONDITIONS

1. **Shop Drawings.** Whenever Shop Drawings are required by the Contract Documents or by the Engineer, Contractor must submit five (5) prints of each shop drawing to the Engineer.

(A) If three (3) prints of the drawing are returned to Contractor marked "NO EXCEPTIONS TAKEN," further revision of the drawings will not be required. If one (1) print of the drawing is returned to Contractor marked "REVISE AND RESUBMIT," Contractor must revise the drawing and resubmit five (5) copies of the revised drawing to the Engineer. City reserves the right to withhold payment due Contractor to cover additional costs of the Engineer's review beyond the second submission.

(B) Fabrication of an item may not commence before the Engineer has reviewed the pertinent shop drawings and returned copies to Contractor marked either "NO EXCEPTIONS TAKEN" or "MAKE CORRECTIONS NOTED."

(C) Revisions indicated on shop drawings are deemed necessary to meet the existing requirements of the Contract Documents and may not be taken as the basis of claims for extra Work. Contractor is not entitled to claim for damages or extension of time due to any delay resulting from making the required revisions to shop drawings. The Engineer's review of the shop drawings does not relieve Contractor of responsibility for any errors or omissions contained in the shop drawings nor will such review operate to waive or modify any provision contained in the Contract Documents.

2. ***Waste Water.*** City will provide water required for performance of the Work. Contractor is responsible for the appropriate disposal of waste water in coordination with City personnel. Contractor must provide a backflow preventer on all point of connections to City's Water System. All backflow preventers must be checked and approved by City's Public Works Water Division. Contractor must provide a deposit (refundable) and make necessary arrangements to pick up a hydrant meter at City's Public Works Office. At the completion of the Project, if the hydrant meter is not returned promptly or if it is damaged, Contractor shall forfeit its deposit.

3. ***Equipment.*** Contractor must provide and use equipment and plants suitable to produce the quality of Work and materials required by the Contract Documents. Contractor may be required to remove equipment which the Engineer deems unsuitable for the Work. Contractor must ensure that equipment is operated by trained, experienced operators, and at a speed or rate of production not to exceed that recommended by the manufacturer. Any vehicles

used to haul materials over existing streets and highways must be equipped with pneumatic tires.

4. **Lines and Grades.** The Engineer will set the stakes or marks necessary to establish the lines and grades required for the completion of the Work in accordance with the Contract Documents. Contractor must give at least two (2) working days' notice to the Engineer of the need for setting any lines and grades.

(A) ***Measurements.*** Distances and measurements are given and will be made in a horizontal plane. Grades are given from the top of stakes or nail unless otherwise noted. Three (3) consecutive points shown on the same rate of slope must be used in common in order to detect any variation from a straight grade. Any variation from a straight grade, straight slope or line, must be reported to the Engineer. If such discrepancy is not reported to the Engineer, Contractor is responsible for any error in the finished work.

(B) ***Stakes.*** Contractor must preserve all stakes and points set for lines, grades or measurements of the Work in their proper places until authorized by the Engineer to remove them. All expense incurred by replacing stakes that have been removed without proper authority may be deducted from any payment due to Contractor.

5. **Disposal of Materials Outside of Street Right-of-Way.** Unless otherwise specified in the Specifications or Special Conditions, Contractor is solely responsible for disposing of materials outside the street right-of-way and for all associated costs. Before disposing materials outside the street right-of-way, Contractor must 1) obtain a written release from the property owner releasing City from any and all responsibility in connection with the disposal of material on that property; and 2) obtain permission from the Engineer to dispose of the material at the permitted location.

6. **Emergency Contact.** Prior to the commencement of Work on the Project, Contractor must provide contact information to the Engineer for the person designated by Contractor to respond to any emergency that arises on the Worksite during the course of the Project. That person will be responsible for responding to the Worksite within thirty (30) minutes following notification of an emergency by City's Police or Fire Department, regardless of the time of day.

7. **Right-of-Way.** City will provide the right-of-way for performance of the Work. Contractor is solely responsible for any additional area required outside of the designated the right-of-way, unless otherwise provided in the Contract Documents.

(A) ***Environmental Control.*** Contractor must not pollute any drainage course or its tributary inlets with fuels, oils, bitumens, acids, insecticides, herbicides or other harmful materials. Contractor and its subcontractors shall at all times in the performance of the Work comply with all applicable federal, state, and local laws and regulations concerning pollution of waterways.

8. **Use of Explosives.** When the use of explosives is necessary for the prosecution of the Work, Contractor must ensure that they are used with the utmost care to avoid endangering persons or property. All explosives must be used and stored in strict accordance with all applicable federal, state, and local laws and regulations.

9. **Authorized Work Days and Hours.**

(A) ***Authorized Work Days.*** Except as expressly authorized in writing by City, Contractor is limited to performing Work on the Project on the following days of the week, excluding holidays observed by City:
Monday to Friday

(B) ***Authorized Work Hours.*** Except as expressly authorized in writing by City, Contractor is limited to performing Work on the Project during the following hours:

7am to 5pm

10. **Weather Delays.** This provision is intended to supplement the requirements of General Conditions Section 5.2 on Schedule Requirements and Section 5.3 on Delays and Extensions of Contract Time.

(A) ***Weather Delay Day***. A Weather Delay Day is a Working Day during which Contractor and its forces, including Subcontractors, are unable to perform more than forty percent (40%) of the critical path Work scheduled for that day due to adverse weather conditions which impair the ability to safely or effectively perform the scheduled critical path Work that day. Adverse weather conditions may include rain, saturated soil, and Worksite clean-up required due to adverse weather. Determination of what constitutes critical path Work scheduled for that day will be based on the most current, City-approved schedule.

(B) ***Normal Weather Delay Days.*** Based on historic records for the Project location, Contractor's schedule should assume the following number of normal Weather Delay Days for each month:

Month	# Normal Weather Delay Days
January	11
February	11
March	10
April	6
May	4
June	2
July	1
August	1
September	1
October	4
November	7
December	10

(C) ***Extension of Time.*** Contractor will be entitled to a non-compensable extension of the Contract Time for each Weather Delay Day in excess of the normal Weather Delay Days within a given month, as set forth in Section 5.3 above, subject to the following limitations:

(1) Contractor must fully comply with the applicable procedures in Article 5 and 6 of the General Conditions regarding requests to modify the Contract Time.

(2) Normal Weather Delay Days which do not occur during a given month do not carry over to another month.

(3) Contractor will not be entitled to an extension of time for a Weather Delay Day to the extent Contractor is responsible for concurrent delay on that day.

END OF SPECIAL CONDITIONS

TECHNICAL PROVISIONS

GENERAL REQUIREMENTS

1.01 ORDER OF WORK

a. Description: Order of work shall conform to the provisions in Section 5-1.05, "Order of Work," of the Standard Specifications and these special provisions.

The Contractor shall be responsible for submitting the following information to the City:

1. The Contractor shall provide to the City a Construction Schedule **10 calendar days prior to the Contractor performing any work on the project site**. The Schedule shall include the following information**:**
   - Detail all stages of construction
   - Time frame/duration of stages

2. The Contractor shall provide to the City a Notice to Businesses and Residences **7 calendar days prior to setting any stage construction components**. One copy (hard copy and electronic form) of the Notice shall be provided and contain the following information:
   1. Introduction of Contractor
   2. Project description
   3. Project begin and end construction dates/duration
   4. Project staging descriptions/limits

If sanitary sewer facilities are to be impacted, upon scheduled date of the preconstruction meeting, Contractor shall develop, prepare and submit a Sanitary Sewer Replacement Logistics Plan (SSRLP) to the Engineer for review and approval. The SSRLP shall show contractor's construction methodology to be implemented in order to maintain Sanitary Sewer service throughout construction.

Upon a scheduled date of the preconstruction meeting, Contractor shall provide a construction schedule as specified in Section 1.09, Progress Schedule of these Technical Provisions, for the Engineer's approval.

Contractor shall notify and distribute notices to all affected residents and businesses a minimum of 48 hours but no earlier than 72 hours prior to affecting the resident's or business' in anticipation of the project.

Contractor shall meet with the Project Engineer weekly to go over the project schedule, and discuss project progress, duration, issues, etc.

Utility boxes, vaults, and valve covers are intended to be constructed to future grades.

The contractor shall perform all work for the project between 7AM to 5PM, Monday through Friday, unless otherwise directed and approved by the Engineer. Unless authorized by the Engineer, there shall be no work performed at night or on Saturday, Sunday or Public Holidays. If authorized by the Engineer, night work shall be conducted between 10PM to 6AM, Monday through Friday only. The contractor shall not work on City observed holidays.

b. Measurement and Payment: Full compensation for conforming to the provisions in this section "Order of Work" including development, preparation and coordination with utility companies and contractors, and notification to all affected residents and businesses shall be considered as **included in the lump sum price** paid for the **Morgan Hill Library Addition Project** and no additional compensation will be allowed therefore.

1.04 EXCAVATION SAFETY PLANS

a. Description: Section 5-1.02A, "Trench Excavation Safety Plans," of the CSS is amended to read:

5-1.02A EXCAVATION SAFETY PLANS

- The Contractor is solely responsible for excavation safety, including support to all adjacent improvements. This requirement is continuous and not limited to normal working hours.
- The Construction Safety Orders of the Division of Occupational Safety and Health shall apply to all excavations. For all excavations 5-feet or more in depth, the Contractor shall submit to the Engineer a detailed plan showing the design and details of the protective systems to be provided for worker protection from the hazard of caving ground during excavation. The detailed plan shall include any tabulated data and any design calculations used in the preparation of the plan. Excavation shall not begin until the detailed plan has been reviewed and approved by the Engineer.
- Detailed plans of protective systems for which the Construction Safety Orders require design by a registered professional engineer shall be prepared and signed by an engineer who is registered as a Civil Engineer in the State of California, and shall include the soil classification, soil properties, soil design calculations that demonstrate adequate stability of the protective

system, and any other design calculations used in the preparation of the plan.

- No plan shall allow the use of a protective system less effective than that required by the Construction Safety Orders.
- If the detailed plan includes designs of protective systems developed only from the allowable configurations and slopes, or Appendices, contained in the Construction Safety Orders, the plan shall be submitted at least 5 days before the Contractor intends to begin excavation. If the detailed plan includes designs of protective systems developed from tabulated data, or designs for which design by a registered professional engineer is required, the plan shall be submitted at least 3 weeks before the Contractor intends to begin excavation.
- Attention is directed to Section 7-1.01E, "Trench Safety" of the Standard Specifications.

b. Measurement and Payment: Full compensation for conforming to the provisions in this section "Excavation Safety Plans" shall be considered as included in the contract prices paid as **included in the lump sum price** paid for the **Morgan Hill Library Addition Project** and no additional compensation will be allowed therefor.

1.05 DUST CONTROL

a. Description: Dust control shall conform to the provisions in Section 10, "Dust Control," of the Standard Specifications and these Technical Provisions.

b. Measurement and Payment: Full compensation for conforming to the provisions in this section "Dust Control" shall be considered as included in the contract prices paid considered as **included in the lump sum price** paid for the **Morgan Hill Library Addition Project** and no additional compensation will be allowed therefor.

1.06 WATER POLLUTION CONTROL

a. General: Water pollution control work shall conform to the provisions in Section 7-1.01G, "Water Pollution," of the Standard Specifications and these specifications.

For the entire duration of construction activities for this project, the California Stormwater Quality Association (CASQA) Best Management Practice (BMP) Handbook for construction shall be used. Furthermore, contractor is fully responsible to provide erosion and sediment control for the entire construction site at all times. Contractor shall be responsible for initiating

the required control measures. CASQA BMP information can be viewed and downloaded at

http://cabmphandbooks.com

The Contractor shall know and fully comply with the applicable provisions of the Manuals and Federal, State, and local regulations that govern the Contractor's operations and storm water discharges from both the project site and areas of disturbance outside the project limits during construction.

Under no circumstances, shall concrete wash water, water from sawcutting operations or any other contaminated water be allowed to enter the storm drain system or other drainage courses.

The City assumes no responsibility whatsoever to the Contractor or a property owner with respect to any arrangements made between the Contractor and the property owner to allow disturbance of areas outside the project limits.

The Contractor shall be responsible for the costs and for liabilities imposed by law as a result of the Contractor's failure to comply with the requirements set forth in this section "Water Pollution Control" including, but not limited to, compliance with the applicable provisions of the Manuals and Federal, State, and local regulations. For the purposes of this paragraph, costs and liabilities include, but are not limited to, fines, penalties, and damages whether assessed against the City or the Contractor, including those levied under the Federal Clean Water Act and the State Porter Cologne Water Quality Act.

In addition to the remedies authorized by law, an amount of the money due the Contractor under the contract, as determined by the City, may be retained by the City disposition has been made of the costs and liabilities.

The retention of money due the Contractor shall be subject to the following:

1) The City will give the Contractor 30 days notice of the City's intention to retain funds from partial payments, which may become due to the Contractor prior to acceptance of the contract. Retention of funds from payments made after acceptance of the contract may be made without prior notice to the Contractor.
2) No retention of additional amounts out of partial payments will be made if the amount to be retained does not exceed the amount being

withheld from partial payments pursuant to Section 9-1.06, "Partial Payments," of the Standard Specifications.

3) If the City has retained funds and it is subsequently determined that the City is not subject to the costs and liabilities in connection with the matter for which the retention was made, the City shall be liable for interest on the amount retained at the legal rate of interest for the period of the retention.

Conformance with the provisions in this section "Water Pollution Control" shall not relieve the Contractor from the Contractor's responsibilities as provided in Section 7, "Legal Relations and Responsibilities," of the Standard Specifications.

b. Measurement and Payment: Full compensation for water pollution control, including furnishing all labor, materials tools, equipment, and incidentals, and for doing all the work involved in planning, implementing, and maintaining of the water pollution control shall be considered as **included in the lump sum price** paid for the **Morgan Hill Library Addition Project** and no separate payment will be made therefor.

1.07 DAMAGE REPAIR

a. Description: Attention is directed to Section 7-1.16, “Contractor’s Responsibility for the Work and Materials,” and Section 7-1.11, “Preservation of Property,” of the Standard Specifications and these Technical Provisions. Attention is also directed to Section 1.01, “Order of Work” in these Technical Provisions.

Any damage to existing facilities or properties or any need to alter, remove, or destroy existing facilities during the period of the work shall be returned to the original condition.

b. Measurement and Payment: All damage to existing facilities shall be repaired and or replaced at the Contractor’s expense.

1.08 RESPONSIBILITY FOR DAMAGE

a. General: Responsibility for damage shall conform to the provisions in Section 7-1.12, “Responsibility for Damage,” of the Standard Specifications.

1.09 PROGRESS SCHEDULE

a. General: The progress schedule shall be in accordance with Section 8-1.04 of the CSS. Furthermore, on a weekly basis, the schedule shall be updated and submitted to the Engineer. This update shall show the

progress on salient features, mark the dates of completion and incorporate changes in construction sequencing or in items of construction.

b. Format: The construction schedule shall be a CPM format. The schedule shall be submitted in the following formats: Time-scaled Logic Diagram showing the name of the activity, the logical relationships, the duration, and the actual or scheduled start dates in a bar chart format; and an Activity Report showing the name of the activity, the actual and scheduled finish and start dates, the scheduled and actual durations, the logical relationships and other pertinent data. The schedule shall be subject to review, correction and acceptance by the Engineer.

c. Periodic Scheduling Meetings: Weekly scheduling meetings will be required in which the project teams of the Contractor and his agents and the City can meet to discuss the schedule and progress of project.

d. Measurement and Payment: Full compensation for conforming to the provisions in this section "Progress Schedule" shall be considered as included in the contract prices paid for the various items of work involved and no additional compensation will be allowed therefor.

1.10 COORDINATION OF WORK

a. Description: The Contractor shall give specified, notifications and withdraw his forces from work areas for the specified time windows for utility companies to perform specified relocation activities. The Contractor shall otherwise coordinate their operations with those of utility companies.

The Contractor shall also be responsible for coordinating the work with businesses and property owners including the shut-downs by written notification. All properties affected by shutdowns shall be notified in writing, 48 hours prior to the interruption. The contractor shall attempt to notify the affected occupants or residents, in person, on the same day of the shut down.

Contractor and Engineer shall meet with all affected businesses to coordinate construction schedule, hours of work, maintaining of ingress/egress and reconstruction and replacement intentions to businesses' facilities that will be impacted during construction.

Failure to notify property owners with written notification shall result in stopping the project progress.

b. Measurement and Payment: Full compensation for conforming to the provisions in this section "Coordination of Work" shall be considered as

included in the lump sum price paid for the **Morgan Hill Library Addition Project** and no additional compensation will be allowed therefor.

1.11 FINAL CLEAN UP

a. Description: The Contractor shall clean up all rubbish and excess materials from the work site, the material storage site, and all ground occupied by Contractor in connection with this work. The Contractor shall leave all parts of the work in a neat and presentable condition, prior to the final inspection of the work by the Engineer.

b. Measurement and Payment: Full compensation for conforming to the provisions in this section "Final Clean Up" shall be considered as **included in the lump sum price** paid for the **Morgan Hill Library Addition Project** and no additional compensation will be allowed therefor.

1.12 PROJECT RECORDS AND SUBMITTALS

a. Description: This section delineates the procedure the Contractor is to adhere to in the submission of documentation for material approval, and covers the records required of the Contractor following completion of the work.

a. Submittals

b. Progress Schedule:
Within 7 days after receiving the Notice to Proceed and before any work is begun, the Contractor shall submit four copies of a Progress Schedule complying with Section 1.09 of these Technical Provisions. The first progress payment will not be issued until the progress schedule is submitted.

c. Supervisory Personnel:
The Contractor shall submit a list of supervisory personnel who will be responsible for the performance of the Contract. The Contractor shall designate one (1) person who will have full decision' making authority to represent the Contractor on a daily basis at the project site. The list will include phone numbers where the personnel may be reached by the Engineer.

d. Shop Drawings:
The term "shop drawings" includes drawings, diagrams, layouts, schematics, descriptive literature, illustrations, schedules, performance and test data, and similar materials furnished by the Contractor to explain in detail specific portions of the work required

by the Contract. City shall have up to 20 days to review the shop drawings.

At least 15 working days prior to ordering of any materials, the Contractor shall forward to Engineer, for approval, all submittals required by the individual sections of the specifications. Unless a different number is called for by an individual section, six (6) copies of each shop drawing, material description, and specification literature and three specimens of each sample are required, all of which will be retained or distributed by the Engineer. The Contractor shall submit whatever additional number of shop drawings and literature, in addition to the above requirements, that the Contractor wants returned. The Engineer may require the Contractor to submit a legible reproducible print in addition to the above copies. Contractor shall number each type of material separately and identify the use of each material.

All submittals shall be transmitted to the Engineer by mail or in person with the letter of transmittal included in these documents. The Engineer will return all reviewed submittals to the Contractor within 10 working days.

Contractor shall coordinate all such drawings, and review them for legibility, accuracy, completeness, and compliance with contract requirements, and shall indicate approval thereon as evidence of such coordination and review. Shop drawings submitted to the Engineer without evidence of the Contractor's approval will be returned for resubmission.

Approval by the Engineer shall not relieve the Contractor from responsibility for any errors or omissions in such drawings, nor from responsibility for complying with requirements of this Contract, except with respect to variations described and approved in accordance with the Paragraph below.

If shop drawings show variations from contract requirements, the Contractor shall describe such variations in writing, separate from the drawings, at time of submission. All such variation must be approved by the Engineer.

e. Engineer's Approval:
The Engineer will indicate approval or disapproval of each submittal, and the reasons for disapproval.

a) If no corrections are required, the copies will be returned

marked "NO EXCEPTIONS TAKEN" and work may begin immediately on incorporating the material and equipment covered by the submittal into the project.

b) If limited corrections are required, the copies will be returned marked "MAKE CORRECTIONS NOTED." Work may begin immediately on incorporating the material and equipment covered by the corrected submittal into the project.

c) If insufficient or incorrect data has been submitted, the copies will be returned marked "AMEND & RESUBMIT." No work incorporating the material and equipment covered by this submittal into the project may begin until the submittal has been revised, resubmitted, and returned marked either "NO EXCEPTIONS TAKEN" or "MAKE CORRECTIONS NOTED."

d) If the submittal is unacceptable, the copies will be returned marked "REJECTED - SEE REMARKS." No work incorporating the material and equipment covered by this submittal into the project may begin until a new submittal has been made and returned marked either "NO EXCEPTIONS TAKEN" or "MAKE CORRECTIONS NOTED."

e) The Contractor shall not change any drawing after it has been marked “NO EXCEPTIONS TAKEN” or “MAKE CORRECTIONS NOTED” or change any approved equipment or material without written permission of Engineer.

f) If more than three submittals for a single item are required because of incorrect or insufficient data, or the submittal is unacceptable, or because the Contractor wishes to change previously approved material, then all costs incurred by the Engineer for the additional review shall be deducted from monies due the Contractor.

f. Certificates:

For those items called for in individual sections, the Contractor must furnish certificates from manufacturers, suppliers, or others certifying that materials or equipment being furnished under the Contract comply with the requirements of these specifications.

Certificates of compliance shall conform to the provisions in Section 6-1.07 "Certificates of Compliance" of the Caltrans Standard Specifications and these specifications.

Certificates of compliance from the Contractor, suppliers, and/or manufacturers, shall clearly indicate that the material to be delivered to the jobsite will meet all requirements of the specifications. A certificate of compliance shall include, but not be limited to the project title, delivery location, date (or approximate date) of delivery, name of the material with appropriate classification or model numbers, quantity, name of the manufacturer, statement of compliance with all requirements of the specifications, and certifier's name, title and signature. In addition, a factory or mill certification (laboratory test report), if required by the specifications, shall be submitted with certificate of compliance. The factory or mill shall not substitute the certificate of compliance, unless it contains all information required for a certificate of compliance as described above.

Insufficient, incomplete, or unclear certificates shall be rejected and shall be resubmitted. The Contractor shall be responsible for all delays caused by the resubmittals.

g. Samples:
For those items called for in individual sections, the Contractor must furnish samples. Samples shall be of sufficient size to clearly illustrate functional characteristics and full range of color, texture, and pattern.

The Contractor shall notify the Engineer at least one (1) week prior to commencement of the construction and shall furnish the Engineer at least one (1) day notice when inspections are required.

h. Records:
The Contractor shall provide, prior to acceptance of all work, all records as herein specified and as specified in the individual sections of the contract documents. Six (6) sets of all records shall be furnished to the Engineer for review, approval and distribution to the interested parties.

All submitted records shall be contained in a manual or manuals consisting of 8-1/2 x 11 inch hardback 3 ring binders. Included in each manual shall be catalog data on each item, together with parts lists, description of operation, maintenance information, shop drawings, wiring and riser diagrams, along with all test data. Catalogs and data in the manual shall be neat, clean copies. Drawings shall be accordion folded to letter size and installed in an envelope within the manual. An index shall be provided, which shall list all contents in an orderly manner, with the respective equipment suppliers' name, address and telephone number. The manufacturer's recommended servicing instructions shall also be included. Diagrams shall be

complete for each system installed. Provide divider sheets with identifying tabs between each category.

i. As-Built Drawings:
The Contractor shall maintain a separate, neat, and legible set of construction drawings showing as built conditions of all constructed facilities. Changes shall be shown to scale in red on the appropriate Drawings. The locations of installed underground and hidden utilities will be shown and dimensioned to appropriate reference points. No work shall be permanently concealed until the required information has been recorded.

Where the Drawings are not of sufficient size, scale, or detail, the Contractor shall furnish his/her own drawings for incorporation of details and dimension. In such cases, the Contractor shall provide a reproducible set of his/her drawings, suitability cross referenced to the Contract Drawings.

The as-built drawings shall be maintained up to date at all times. Prior to any progress payments, the Engineer shall review the status of the as-built construction drawings. The Engineer shall withhold approval of progress payments until the as-built drawings are up to date.

Upon completion of the Contract, the Contractor shall furnish two satisfactory sets of as-built construction drawings. Drawings shall be certified that conditions shown are as-built. Final payment shall be withheld until the as-built construction drawings are received and accepted by the Engineer.

**** The building permit fees shall be paid by the City of Morgan Hill that is within the scope of work for this project. ****

b. Measurement and Payment: Full compensation for conforming to the provisions in this section "Project Records and Submittals" shall be considered as **included in the lump sum price** paid for the **Morgan Hill Library Addition Project** and no additional compensation will be allowed therefor.

2.01 MOBILIZATION

a. Description: Mobilization shall conform to the provisions in Section 11, "Mobilization," of the Standard Specifications.

b. Measurement and Payment: Full compensation for conforming to the provisions in this section "**Mobilization**" shall be considered as **included in the lump sum price** paid for the **Morgan Hill Library Addition Project** and no additional compensation will be allowed therefor.

2.02 CONSTRUCTION AREA SIGNS

a. Description: Construction area signs shall be furnished, installed, maintained, and removed when no longer required in conformance with the provisions in Section 12, "Construction Area Traffic Control Devices," of the Standard Specifications and these Technical Provisions.

Type II retroreflective sheeting shall not be used on construction area sign panels.

The Contractor shall notify the appropriate regional notification center for operators of subsurface installations at least 2 working days, but not more than 14 calendar days, prior to commencing excavation for construction area sign posts. The regional notification centers include, but are not limited to, the following:

Notification Center	Telephone Number
Underground Service Alert-Northern California (USA)	1-800-642-2444 1-800-227-2600
Underground Service Alert-Southern California (USA)	1-800-422-4133 1-800-227-2600

Excavations required to install construction area signs shall be performed by hand methods without the use of power equipment, except that power equipment may be used if it is determined there are no utility facilities in the area of the proposed post holes.

Sign substrates for stationary mounted construction area signs may be fabricated from fiberglass reinforced plastic as specified under "Prequalified and Tested Signing and Delineation Materials" of these technical provisions.

The Contractor may be required to cover certain signs during the progress of

the work. Signs that are no longer required or that convey inaccurate information to the public shall be immediately covered or removed or the information shall be corrected. Covers for construction area signs shall be of sufficient size and density to completely block out the complete face of the signs. The retro-reflective face of the covered signs shall not be visible either during the day or at night. Covers shall be fastened securely so that the signs remain covered during inclement weather. Covers shall be replaced when they no longer cover the signs properly.

b. Measurement and Payment: Full compensation for construction area signs, including furnishing all labor, materials (including signs), tools, equipment, and incidentals, and for doing all the work involved in placing, removing, storing, maintaining, moving to new locations, replacing, and disposing of the components of the construction area si**gns shown on the plans,** shall be considered as **included in the lump sum price** paid for the **Morgan Hill Library Addition Project**, and no separate payment will be made therefor.

3.01 POTHOLING

a. Description: The Contractor shall pothole to locate crossing utilities at the locations directed by the Engineer prior to excavating to install the water or sewer mains. The contractor shall submit a report to the Engineer documenting the location, depth, size and material of the utilities found. A minimum size of 2' x 2' is required for each pothole and up to a maximum depth of 10 feet. **** Include 5 potholes for the Morgan Hill Library Addition Project as part of the bid proposal ****

b. Measurement and Payment: **Potholing** shall include full compensation for all labor, materials, tools, equipment and incidentals, and for doing all the work involved in Potholing, including all traffic control, flagging and temporary backfilling or steel plating, complete in place, as shown in the plans, as specified in the technical provisions and as directed by the Engineer and shall be considered as **included in the lump sum price** paid for the **Morgan Hill Library Addition Project** and no additional compensation will be allowed therefore.

3.02 SUPPLEMENTAL WORK

a. Description: The work shall include any new or unforeseen work not specified for on the plans and specification. The lump sum dollar amount listed in the bid schedule for Supplemental Work **shall be included as per the bid schedule.** Supplemental work shall be performed only upon direct written authorization from the Project Engineer. Agreed price may be used as an alternate method of payment, if directed by the Project Engineer.

Appendix

CITY OF MORGAN HILL

Morgan Hill Library Addition

660 W Main Ave.
Morgan Hill, CA 95037

Project Manual

ARCHITECT

Weston Miles Architects, Inc.
17500 Depot Street, Suite #120
Morgan Hill, CA 95037
Phone: (408) 779-6686
Fax: (408) 778-9417

Project Manual #:**1of 1**
June, 2019

TABLE OF CONTENTS

DIVISION 01 - GENERAL REQUIREMENTS
SECTION 011000 - SUMMARY OF WORK
SECTION 012100 - PROJECT CONTROL SYSTEM
SECTION 012200 - UNIT PRICES: MEASUREMENT AND PAYMENT
SECTION 012600 - MODIFICATION PROCEDURES
SECTION 012613 - REQUESTS FOR INFORMATION
SECTION 013113 - PROJECT COORDINATION
SECTION 013119 - PROJECT MEETINGS
SECTION 013200 - CONSTRUCTION PROGRESS DOCUMENTATION: SCHEDULES & REPORTS
SECTION 013300 - SUBMITTAL PROCEDURES
SECTION 015639 - TEMPORARY TREE AND PLANT PROTECTION
SECTION 017400 - CONSTRUCTION CLEANING AND WASTE MANAGEMENT
SECTION 017700 - CONTRACT CLOSEOUT PROCEDURES
SECTION 018119 - CONSTRUCTION INDOOR AIR QUALITY MANAGEMENT

DIVISION 02 - EXISTING CONDITIONS
SECTION 024113 - SELECTIVE SITE DEMOLITION
SECTION 024119 - SELECTIVE STRUCTURE DEMOLITION

DIVISION 03 - CONCRETE
SECTION 030000 - CONCRETE WORK
SECTION 031000 - CONCRETE FORMWORK
SECTION 031500 - CONCRETE ACCESSORIES
SECTION 032000 - CONCRETE REINFORCEMENT
SECTION 033000 - CAST-IN-PLACE CONCRETE

DIVISION 05 - METALS
SECTION 051200 - STRUCTURAL STEEL & MISCELLANEOUS METAL
SECTION 055000 - METAL FABRICATIONS

DIVISION 06 - WOOD, PLASTICS, AND COMPOSITES
SECTION 061000 - ROUGH CARPENTRY
SECTION 062000 - FINISH CARPENTRY
SECTION 064100 - ARCHITECTURAL WOOD CASEWORK
SECTION 066116 - SOLID SURFACING FABRICATIONS

DIVISION 07 - THERMAL AND MOISTURE PROTECTION
SECTION 072116 - BLANKET INSULATION
SECTION 072200 - ROOF AND DECK INSULATION
SECTION 072600 - SURFACE APPLIED VAPOR REDUCTION SYSTEMS
SECTION 072616 - BELOW-GRADE VAPOR RETARDER
SECTION 075500 - HYBRID TPO ROOFING
SECTION 076000 - FLASHING & SHEET METAL

SECTION 076100 - SHEET METAL ROOFING
SECTION 076200 - SHEET METAL FLASHING AND TRIM
SECTION 076526 - SELF-ADHERING SHEET FLASHING
SECTION 077100 - ROOF SPECIALTIES
SECTION 079000 - SEALANTS AND CAULKING
SECTION 079500 - EXTERIOR EXPANSION JOINTS

DIVISION 08 - OPENINGS
SECTION 081100 - METAL DOORS AND FRAMES
SECTION 081416 - FLUSH WOOD DOORS
SECTION 081423 - CLAD WOOD DOORS
SECTION 083113 - ACCESS DOORS & FRAMES
SECTION 084213 - ALUMINUM-FRAMED ENTRANCE
SECTION 084313 - ALUMINUM-FRAMED STOREFRONTS
SECTION 084329 - SLIDING STOREFRONTS
SECTION 087100 - DOOR HARDWARE
SECTION 088100 - GLASS AND GLAZING
SECTION 089000 - LOUVERS AND VENTS

DIVISION 09 - FINISHES
SECTION 092400 - PORTLAND CEMENT PLASTERING
SECTION 092900 - GYPSUM BOARD
SECTION 095100 - ACOUSTICAL CEILING
SECTION 096500 - RESILIENT FLOORING
SECTION 096800 - CARPET TILE
SECTION 096810 - RUBBER BASE
SECTION 097700 - SPECIAL WALL SURFACING
SECTION 098400 - ACOUSTIC WALL PANELS
SECTION 099100 - PAINTING

DIVISION 10 - SPECIALTIES
SECTION 102600 - WALL & CORNER PROTECTION
SECTION 102813 - ACCESSORIES
SECTION 104000 - SIGNAGE
SECTION 104413 - FIRE EXTINGUISHERS AND CABINETS

DIVISION 11 - EQUIPMENT
SECTION 115213 - PROJECTION SCREENS

DIVISION 12 - FURNISHINGS
SECTION 122400 - WINDOW SHADES

DIVISION 22 - PLUMBING
SEE PLUMBING DRAWINGS

DIVISION 23 - HEATING, VENTILATING, AND AIR CONDITIONING
SECTION 230548 - HVAC NOISE ATTENUATION

SECTION 230553 - IDENTIFICATION FOR HVAC
SECTION 230593 - TESTING ADJUSTING & BALANCING HVAC
SECTION 230713 - DUCT INSTALLATION
SECTION 233113 - METAL DUCTS
SECTION 233300 - AIR DUCT ACCESSORIES
SECTION 233713 - DIFFUSERS & GRILLES
SECTION 237453 - ROOFTOP PACKAGE HEAT PUMP UNIT

DIVISION 26 - ELECTRICAL
SECTION 260000 - ELECTRICAL GENERAL REQUIREMENTS
SECTION 260519 - LINE VOLTAGE WIRE AND CABLE
SECTION 260526 - GROUNDING
SECTION 260533 - OUTLET, JUNCTION AND PULL BOXES
SECTION 260542 - CONDUITS, RACEWAYS AND FITTINGS
SECTION 260543 - UNDERGROUND DUCTS
SECTION 260544 - IN GRADE PULL BOXES
SECTION 262416 - PANELBOARDS AND DISTRIBUTION PANELS
SECTION 262726 - DEVICES WIRING
SECTION 262816 - CIRCUIT BREAKERS
SECTION 265100 - LIGHTING

DIVISION 31 - EARTHWORK
SEE CIVIL DRAWINGS

DIVISION 32 - EXTERIOR IMPROVEMENTS
SECTION 320000 - CONCRETE REINFORCEMENT
SECTION 321123 - AGGREGATE BASE COURSE
SECTION 321313 - PORTLAND CEMENT CONCRETE PAVEMENT
SECTION 328000 - IRRIGATION
SECTION 329000 - PLANTING: LANDSCAPE WORK

DIVISION 33 - UTILITIES
SEE CIVIL DRAWINGS

END OF SECTION

Division 01:
General Requirements

SECTION 011000 - SUMMARY OF WORK

1.0 GENERAL

1.1 SUMMARY

A. This Section includes all labor, materials, equipment, operations, or methods listed, mentioned or scheduled on the plans and/or herein specified, including all incidentals necessary and required for completion of work under this Section.

B. This Section includes summary of work including:

1. Work covered by Contract Documents including but not limited to:

    a. Addition to existing Library including concrete slab and foundation, structural wood framing, standing seam metal roof and TPO roofing, storefront windows, wood and metal doors, suspended acoustical ceiling and gypsum board ceilings, exterior cement plaster, interior finishes including carpet, resilient flooring, mechanical system, lighting, connection to existing utilities

2. Bid items, Allowances and Alternates.

    a. The Base bid includes the following: Construction of Children's Activity #143, Program Room #144 and all site work.

3. Work sequence.

    a. During the construction of the Project the Library will remain open to the public for all but the final 4 weeks of construction.

    b. Construction shall begin with all site work, including grading and paving and construction of the building addition including the Children's Activity #143 and Program Room #144.

4. Temporary Facilities

    a. The contractor is responsible for ensuring accessibility compliance throughout construction.

5. Cooperation of contractor and coordination with other work.

6. Maintenance.

7. Occupancy requirements.

8. Reference Standards.

9. Products ordered in advance.

10. Furnished products.

1.2 RELATED SECTIONS

A. Documents affecting work of this Section include, but are not necessarily limited to, General Conditions, Special Conditions and Division 1 of these Contract Documents.

1.3 WORK COVERED BY CONTRACT DOCUMENTS

A. Work of Contract comprises the remodel of an existing school.

B. Unless provided otherwise in the Contract Documents, all risk of loss to Work covered by Contract Documents shall rest with Contractor until Final Completion and Acceptance of the Work.

1.4 BID ITEMS

A. Any bid item may be deleted in total or in part prior to or after award of Contract without compensation in any form or adjustment of other bid items or prices therefore.

1. Contractor must coordinate related work and modify surrounding work as required to complete Work, including changes under each Alternate designated in the contract documents.

1.5 WORK SEQUENCE

A. Construct work in stages and at times to accommodate library operation requirements during the construction period.

1. Set up contractor staging area (See 4.0 contractor staging area)

2. All new materials with application odors like, hot mopping, to be accomplished when students are not present, i.e. holidays or Saturdays.

1.6 COOPERATION OF CONTRACTOR AND COORDINATION WITH OTHER WORK

A. Should construction work, or work of any other nature, be under way by other forces or by other contractors within or adjacent to the limits of the Work, the Contractor shall cooperate with all such other contractors or forces to the end that any delay or hindrance to their work will be avoided. The cost of such cooperation will be considered as included in the bid amount and no direct or additional payment will be made therefore.

B. The City of Morgan Hill reserves the right to perform other or additional work, within or adjacent to the limits of the work specified, at any time by the use of other forces. The Contractor shall coordinate with the City of Morgan Hill and any forces, or other forces, engaged by the City of Morgan Hill, as required by the Contract General Conditions. In the event that the performance of such other or additional work materially increases or decreases the Contractor's costs, the work and the amount to be paid therefore will be appropriately adjusted as determined by the Architect.

C. Limit use of premises for Work and for construction operations to allow for:

1. Operation.

2. Work by other contractors and tenants.

D. Coordinate use of premises and access to site with other contractors, utilities, tenants, and forces, as required by the Contract General Conditions. Architect has final authority over coordination, use of premises, and access to site.

E. Cooperate with staff and the public and others who may occupy the building prior to completion of Work of this Contract.

F. Cooperate with contractors for other area work, not included in Contract, but which may take place during construction period

1.7 MAINTENANCE

A. Cost of maintenance of systems and equipment prior to Final Acceptance will be considered as included in prices bid and no direct or additional payment will be made therefore.

1.8 OCCUPANCY REQUIREMENTS

A. Whenever, in the opinion of Architect, Work or any part thereof is in a condition suitable for use, and the best interest of requires such use, may take beneficial occupancy of and connect to, open for public use, or use the Work or such part thereof. In such case, will request Architect to inspect the Work or part thereof, and issue a Certificate of Substantial Completion for that part of Work.

B. Prior to date of Final Acceptance of the Work by all necessary repairs or renewals in Work or part thereof so used, not due to ordinary wear and tear, but due to defective materials or workmanship or to operations of Contractor, shall be made at expense of Contractor.

C. Use of Work or part thereof as contemplated by this Section shall in no case be construed as constituting acceptance of Work or any part thereof. Such use shall neither relieve Contractor of any responsibilities under Contract, nor act as waiver by of any of the conditions thereof.

2.0 PRODUCTS

2.1 REFERENCE STANDARDS

A. For products specified by association or trade standards, comply with requirements of standard, except where more rigid requirements are specified or are required by applicable codes.

3.0 EXECUTION

A. Not applicable to this Section.

END OF SECTION

SECTION 012100 – PROJECT CONTROL SYSTEM

1.0 GENERAL

1.1 WEB DATABASE

A. The City of Morgan Hill will use and maintain a web-based database as the primary means of communication related to the Project's correspondence, submittals, requests for information (RFIs), advisory notices, and non-compliance issues. Correspondence from the Contractor shall be sent to the Construction Manager via the PROCORE System.

B. The Construction Manager and Contractor shall utilize PROCORE's system for electronic submittal of all data and documents (unless specified otherwise by the Construction Manager) throughout the duration of the Contract. PROCORE is a web-based electronic media site that is hosted by PROCORE LLC utilizing their PROCORE web solution. PROCORE will be made available to the Contractor's project personnel. The joint use of this system is to facilitate electronic exchange of information, automation of key processes, and overall management of the Contract. PROCORE shall be the primary means of project information submission and management. When required by the Construction Manager, paper documents will also be required. In the event of discrepancy between the electronic version and paper documents, the paper documents will govern. PROCORE is a registered trademarks of PROCORE LLC.

1.2 USER ACCESS LIMITATIONS

A. The Construction Manager will control the Contractor's access to PROCORE by allowing access and assigning user profiles to accepted Contractor personnel. User profiles will define levels of access into the system, determine assigned function-based authorizations (determines what can be seen) and user privileges (determines what they can do).

1.3 AUTOMATED SYSTEM NOTIFICATION AND AUDIT LOG TRACKING

A. Review comments made (or lack thereof) by the Construction Manager and Design Consultant on Contractor submitted documentation shall not relieve the Contractor from compliance with requirements of the Contract Documents. The Contractor is responsible for managing, tracking, and documenting the Work to comply with the requirements of the Contract Documents. Neither automated system notifications nor audit logs constitute validation of the Contractor's submitted information.

1.4 CONTRACTOR RESPONSIBILITY

A. The Contractor shall be responsible for the validity of their information placed in PROCORE and for the abilities of their personnel. Accepted users shall be knowledgeable in the use of computers, including Internet Browsers, email programs, CAD drawing applications, and Adobe Portable Document Format (PDF) document

distribution program. Adobe PDF documents shall be created through electronic conversion rather than optically scanned whenever possible. The Contractor is responsible for the training of their personnel in the use of PROCORE (outside what is provided by the Construction Manager) and the other programs indicated above as needed.

B. User Access Administration:

1. Provide a list of Contractor's key PROCORE personnel for the Construction Manager's acceptance. The Construction Manager is responsible for adding and removing users from the system. The Construction Manager reserves the right to perform a security check on all potential users.

1.5 CONNECTIVITY PROBLEMS

A. PROCORE is a web-based environment and therefore subject to the inherent speed and connectivity problems of the Internet. The Contractor is responsible for its own connectivity to the Internet. PROCORE response time is dependent on the Contractor's equipment, including processor speed, Internet access speed, etc. and current traffic on the Internet. The City of Morgan Hill and Construction Manager will not be liable for any delays associated from the usage of PROCORE including, but not limited to: slow response time, down time periods, connectivity problems, or loss of information. The Contractor will ensure that connectivity to the PROCORE system (whether at the home office or job site) is accomplished through some form of high-speed communications with 1 Mbps as the minimum bandwidth requirements for using the system. It is recommended a faster connection be used when uploading pictures and files into the system. Under no circumstances shall the usage of PROCORE be grounds for a time extension or cost adjustment to the Contract. If there are problems that persist with the PROCORE site for more than 24 consecutive hours that prevent the electronic submission of data by the Contractor, the Contractor may submit documents in paper form to the Construction Manager until such time that the Construction Manager notifies the Contractor that the PROCORE site is operable and available for use.

1.6 TRAINING

A. The City of Morgan Hill has arranged for the following training to be provided to the Contractor. The Construction Manager will provide a one hour training class to the Contractor within ten (10) days of NTP at a time mutually agreeable to Contractor and Construction Manager. Thereafter the Construction Manager will provide up to one hour of additional training via telephone during the project per month of the project life.

2.0 EQUIPMENT

A. In order to process correspondence, submittals, and RFIs, the Contractor must provide and have in place for its own use the required basic components outlined below:

2.1 HARDWARE

A. A computer with internet access and sufficient capabilities to perform all duties stated in Section 012100; a scanner at least large enough to scan 11” x 17” sheets with sufficient resolution to maintain clarity and legibility of the document at its native size; and a color printer of sufficient size and capacity to accept incoming correspondence as described in this section.

2.2 SOFTWARE

A. Adobe Acrobat 9 Standard; Microsoft Office 2010 or higher, including but not limited to Microsoft Word and Microsoft Excel.

B. PROCORE currently supports Mozilla's Firefox v15.0.1 and newer, Google Chrome v22.01229.79 m and newer, Apple's Safari v6 and newer, and Microsoft's Internet Explorer v8 and v9 and newer web browsers for accessing the application. Certain functions may not be available when using any program other than the newest version of the respective web browser.

2.3 FACILITIES

A. The Contractor shall make its own arrangements to provide high-speed (minimum speed: download 1Mbps/upload 1Mbps) internet connection for its own use as soon as practicable.

3.0 EXECUTION

A. Items to be uploaded to PROCORE by the Construction Manager include but are not limited to: RFI responses, Submittal comments, Clarification letters, Design Clarifications, Field Orders, Potential Change Orders, and System Outage Requests et al. These items will be attached in PDF file format. These attachments may include files that need to be viewed and/or printed in color. Formal letters, stop notices, Field Orders, Progress Payment Requests, and Contract Change Orders shall always include a wet-signed hard copy.

3.1 PROCORE UTILIZATION

A. All project related correspondence (RFIs, submittals, etc.) originated by the Contractor or Subcontractor, Supplier, et al. shall be directed to the Architect and the Construction Manager, unless otherwise indicated in the Specifications.

B. Submittals

1. The use of the electronic communication does not waive the requirement for the provision of hard copies of all formal correspondence and, submittals. The hard copies of all documents must match the electronic copies of all correspondence and submittals.

2. Submittals shall be in accordance with Section 013300. The provisions of Section 013300 shall apply both to electronic copies and hard copies of submittals, unless otherwise stated in writing by the Construction Manager.

3. In addition to above, PROCORE shall be utilized in connection with submittal preparation and information management required by but not limited to Sections:

   a. 00700 General Conditions

   b. 00800 Supplementary General Conditions

   c. 01000 Summary of Work

   d. 012200 Unit Prices: Measurement and Payment

   e. 012600 Modification Procedures

   f. 012613 Requests For Information

   g. 013113 Project Coordination

   h. 013119 Project Meetings

   i. 013200 Construction Progress Documents: Schedules & Reports

   j. 013300 Submittal Procedures

   k. 017700 Contract closeout Procedures

4. PROCORE will be utilized by all other Sections not listed above and as required by the Construction Manager.

3.2 TERMINATION OF USE

A. The City of Morgan Hill reserves the right to terminate the use of PROCORE for the electronic submission of data to the City of Morgan Hill. The City of Morgan Hill may provide an alternate project control system or require the use of paper documents submitted in accordance with the Contract Documents. The Contractor will be provided in writing ten (10) days' notice that the City of Morgan Hill intends to discontinue use of PROCORE.

3.3 ADOBE PDF

A. All information, comments, questions and statements shall be scanned and/or converted to the PDF file format and attached to the PROCORE system. Items to be sent via PROCORE system include but are not limited to large-format plan sheets (22" x 34" or larger), small-format plan sheets, pages within tabbed binders, RFIs, transmittal sheets, et al. The PDF attachments supplied to the Construction Manager

shall be in a sufficient resolution to be fully legible at its native size.

B. All separate files within a given piece of correspondence shall be combined into a single PDF document (i.e. An RFI that contains a text file and two photo files shall be combined into a single PDF document prior to delivery to the Construction Manager.)

3.4 LABELING FORMAT

A. The subject line of each email, and the file name of any attached files shall begin with the file labeling scheme:

RFI_XXXY_(Contractor Name)_(Subject)
Letter_XXXY_(Contractor Name)_(Subject)
Transmittal_XXXY_(Contractor Name)_(Subject)
PCO_XXXY_(Contractor Name)_(Subject)
Submittal_XXX.ZZY_(Contractor Name)_(Subject)

B. The first section of the label indicates the type of correspondence (i.e RFI). "XXX" indicates a unique number, sequentially assigned for the given piece of correspondence. "Y" is a sequential letter assigned for revised or resubmitted documents, i.e. A, B, or C being the 1st, 2nd, and 3rd revision or resubmittal, respectively. "(Contractor Name)" indicates to the database that the correspondence is from the Contractor. The Contractor will indicate the subject at the end of the numbering scheme. For submittals, "ZZ" indicates a unique number, sequentially assigned for each package item (see C. Submittals). Each piece of correspondence shall be sent in a separate email.

C. Submittals - If a submittal package has multiple items, each item shall be considered a separate piece of correspondence and sent separately. For example, if "Submittal 3: Concrete" had two items, "3.01: Mix Design," and "3.02: Curing Compound," two separate items would be emailed to the Construction Manager labeled as:
Submittal_003.01_(Contractor Name)_Mix Design
Submittal_003.02_(Contractor Name)_Curing Compound

3.5 ORIGINAL DOCUMENTS

A. Where possible, the Contractor will obtain the electronic document from its original source to maintain the integrity, legibility, and searchability of the document.

3.6 ORGANIZATION

A. The information included in the attachments shall be organized in a logical and thoughtful manner. Where the information originated in a tabbed format (a binder, for example), the scanned and/or converted PDF file shall be electronically bookmarked accordingly using the "bookmark" function of Adobe Acrobat 9 Standard.

3.7 PRINTING

A. Except where otherwise indicated, the Contractor will receive no hard copies of the above outlined correspondence. The Contractor will be required to print for its use, in color if necessary, any record copies, field copies, sub-contractor copies, etc., if such copies are desired.

3.8 PROJECT FORMS

A. The Contractor shall use its own correspondence forms for attachments uploaded to PROCORE. These forms shall include the identifying information specific to the PDF document succeeding the cover form. Additionally, the Contractor shall input all identifying information within PROCORE as requested when generating a new document within the system.

END OF SECTION

SECTION 012200 - UNIT PRICES: MEASUREMENT AND PAYMENT

1.0 GENERAL

1.1 SUMMARY

A. This Section includes all labor, materials, equipment, operations, or methods listed, mentioned or scheduled on the plans and/or herein specified, including all incidentals necessary and required for completion of work under this Section.

B. This Section includes the description requirements and procedures for determining amount of work done and for obtaining payment for work done.

1.2 RELATED SECTIONS

A. Documents affecting work of this Section include, but are not necessarily limited to, General Conditions, Special Conditions and Division 1 of these Contract Documents.

B. Section 011000 - Summary of Work

C. Section 012600 - Modification Procedures

D. Section 013300 - Submittal Procedures

E. Section 013200 - Construction Progress Documentation – Schedule

F. Section 017700 - Contract Closeout Procedures

1.3 REFERENCES

A. Public Contract Code

1.4 SCOPE OF WORK

A. Work under Contract, or under any bid item, allowance or alternate, shall include all abetment, labor, materials, transport, handling, storage, supervision, administration and all other items necessary for the satisfactory completion of work, whether or not expressly specified or shown.

1.5 DETERMINATION OF QUANTITIES

A. Quantity of work to be paid for under any item for which a unit price is fixed in Contract shall be number, as determined by Architect, of units of work satisfactorily completed in accordance with Plans and Specifications and as

directed pursuant to Plans and Specifications. Unless otherwise provided, determination of number of units of work so completed will be based, so fares practicable, on actual measurement or count within prescribed or ordered limits, and no payment will be made for work done outside of limits. Measurements and computations will be made by methods as Architect may consider appropriate for class of work measured.

1.6 SCOPE OF PAYMENT

A. Except as otherwise expressly stipulated in Section 011000 Summary of Work, payment to Contractor at the unit price or other price fixed in the contract for performing the work required under any item, or (if the contract is on a lump sum price basis) at the lump sum price fixed in the contract for performing all work required under the contract, and as either may be adjusted pursuant to any approved change order, shall be full compensation for completing, in accordance with the Contract Documents, all work required under the item or under the contract, and for all expense incurred by Contractor for any purpose in connection with the performance and completion of said work, including all incidental work necessary for completion of the Work.

B. The Contract Sum, whether lump sum, unit price or otherwise, shall be deemed to include all costs necessary to complete required Work, shall also include any costs for loss or damage arising from nature of Work or, prosecution of the Work, or from action of elements. Unless the Contract Documents expressly provide otherwise, the Contract Sum shall be deemed to include:

1. Any and all costs arising from any unforeseen difficulties which may be encountered during, and all risks of any description connected with, prosecution of Work until acceptance by Morgan Hill Library Expansion;

2. All expenses incurred due to suspension, or discontinuance of Work as provided in Contract;

3. Escalation to allow for cost increases between time of Contract Award and completion of Work.

C. Whenever it is specified herein that Contractor is to do work or furnish materials of any class for which no price is fixed in the Contract, it shall be understood that Contractor is to do such work or furnish such materials without extra charge or allowance or direct payment of any sort, and that cost of doing work or furnishing materials is to be included in price bid, unless it is expressly specified herein, in particular cases, that work or material is to be paid for as extra work.

D. No payment shall be made for materials or equipment not yet incorporated into the Work, except as follows:

NONE.

E. For the above listed materials and equipment, where Contractor requests payment on the basis of such materials and equipment not incorporated in the Work, Contractor must satisfy the following conditions:

1. The materials and/or equipment shall be delivered and suitably stored at the site or at another location agreed to in writing, for example, a mutually acceptable warehouse;

2. Full title to the materials and/or equipment shall vest in Morgan Hill Library Expansion at the time of deliver to the site, warehouse or other storage location;

3. Contractor shall obtain a negotiable warehouse receipt, endorsed over to the City of Morgan Hill for materials and/or equipment stored in an off-site warehouse. No payment shall be made until such endorsed receipts are delivered to Architect;

4. Stockpiled materials and/or equipment shall be available for the City of Morgan Hill inspection. Materials and/or equipment shall be segregated and labeled or tagged to specifically identify this specific Contract;

5. After delivery of materials and/or equipment, if any inherent or acquired defects are discovered, defective materials and/or equipment shall be removed and replaced with suitable materials and/or equipment at Contractor's expense;

6. At its expense, Contractor shall insure the materials and/or equipment against theft, fire, vandalism, and malicious mischief, as well as any other coverages required under the Contract Documents;

7. Contractor's application for payment shall be accompanied by a bill of sale, invoice or other documentation warranting that the City of Morgan Hill has received the materials and equipment free and clear of all liens and evidence that the materials and equipment are covered by appropriate property insurance and other arrangements to protect the City of Morgan Hill’s interest therein, all of which must be satisfactory to the City of Morgan Hill.

1.7 BASIS OF PAYMENT

A. Unit Pay Quantities: When estimated quantity for specific portions of Work is listed in Bid Form, quantity of work to be paid for shall be actual number of units satisfactorily completed in accordance with Plans and Specifications.

B. Lump Sum: When estimated quantity for specific portion of Work is not indicated and unit is designated as Lump Sum, payment will be on a Lump Sum basis for Work satisfactorily completed in accordance with Plans and Specifications.

C. Allowances: Allowance items will be paid for as provided in Section 011000 Summary of Work. Funds authorized for Allowance work will not be released for contract payments unless additional work has been authorized in writing by the City of Morgan Hill.

D. Payment for all work included in Contract Documents shall be included in lump sum or unit price or prices bid, and no direct or additional payments will be made for any incidental work.

E. The City of Morgan Hill does not expressly, or by implication, agree, warrant, or represent in any manner, that actual amount of Work will correspond with amount shown or estimated and reserves right to increase or decrease amount of any class or portion of Work, to leave out entire Bid Item or Items, or to add work not included in Bid, when in its judgment such change is in best interest of the City of Morgan Hill. No change in Work shall be considered waiver of any other condition of Contract. No claim shall be made for anticipated profit, for loss of profit, for damages, or for extra payment whatever, except as otherwise expressly provided for in Contract Documents, because of any differences between amount of work actually done and estimated amount as set forth herein, or for elimination of extra Bid Items.

1.8 PROGRESS PAYMENTS

A. Progress payments will be made monthly.

B. Schedule of Values:

1. Within thirty (30) calendar days from issuance of Notice of Award and prior to the Contractor's application for the first progress payment, the Contractor shall submit a detailed breakdown of its bid by scheduled Work items and/or activities, including coordination responsibilities and project record document responsibilities. The Contractor shall furnish such breakdown, of the total Contract Sum, by assigning dollar values (cost estimates) to each applicable Progress Schedule network activity, which cumulative sum equals the total Contract Sum. The format and detail of the breakdown shall be as directed by the Architect to facilitate and clarify future progress payments to

Contractor for direct Contact Work. This breakdown shall be referred to as the Schedule of Values.

2. The Contractor's overhead, profit, insurance, cost of bonds and/or other financing, as well as "general conditions costs," (for example, site cleanup and maintenance, temporary roads and access, off site access roads, temporary power and lighting, security and the like), shall be prorated through all activities so that the sum of all the Schedule of Values line items equal the Contractor's total Contract Sum, less any allowances designated by the Architect.

3. The Architect will review the breakdown in conjunction with the Progress Schedule to ensure that the dollar amounts of this Schedule of Values are, in fact, fair market cost allocations for the Work items listed. Upon favorable review by the Architect, this Schedule of Values will be accepted for use by the Architect. The City of Morgan Hill and the Architect shall be the sole judges of fair market cost allocations.

4. Any attempt to increase the cost of early activities, that is, "front loading," will be rejected by the City of Morgan Hill, resulting in a complete reallocation of monies until such "front loading" is corrected. Repeated attempts at "front loading" may result in suspension or termination of the Work or refusal to process progress payments, until such time as the Schedule of Values is acceptable to the City of Morgan Hill.

C. Payment Requests:

1. On or before the 25th day of each month, the Contractor shall submit to the Architect a request for payment for the cost of the Work put in place during the period from the [1st] day of the previous month to the [30th] day of the previous month. Such requests for progress payments shall be based upon Schedule of Values prices of all labor and materials incorporated in the Work up until midnight of the last day of that one month period, less the aggregate of previous payments. If Contractor is late submitting its payment request, that payment request may be processed at any time during the succeeding one month period, resulting in processing of Contractor's payment request being delayed for more than a day for day basis.

2. Payment requests may include, but are not necessarily limited to the following:

a. Material, equipment and labor incorporated into the Work, less any previous payments for the same;

b. Up to seventy-five percent (75%) of the cost of major equipment identified in paragraph 1.05.D above, if purchased and delivered to the site or stored off site, as may be approved by the Architect.

c. Up to fifty percent (50%) of the cost of materials identified in paragraph 1.05.D above specifically fabricated for the Project that are not yet incorporated into the Work.

3. Contractor shall, at the time any payment request is submitted, certify in writing the accuracy of the payment request and that Contractor has fulfilled all scheduling requirements of the Contract General Conditions (refer to AIA Document A201-1997, included in Part A of this book) and Section 013200, Construction Progress Documentation -Schedules and Reports, including updates and revisions. The certification shall be executed by a responsible officer of the Contractor.

4. No progress payment will be processed prior to Architect receiving all requested, acceptable schedule update information.

5. Each payment request shall list each Change Order executed prior to date of submission, including the Change Order Number, and a description of the work activities, consistent with the descriptions of original work activities. Contractor shall submit a monthly Change Order status log to Architect.

6. If Architect requires substantiating data, Contractor shall submit information requested by Architect, with cover letter identifying Project, payment request number and date, and detailed list of enclosures. Contractor shall submit one copy of substantiating data and cover letter for each copy Payment request submitted.

7. Monthly progress payments shall be made, based on total value of activities completed or partially completed, as determined by the City of Morgan Hill with participation of Contractor, and based upon approved activity costs. Accumulated retainage will be shown as separate item in payment summary. If Contractor fails or refuses to participate in construction progress evaluation with the City of Morgan Hill, Contractor shall not receive current payment until Contractor has participated fully in providing construction progress information and schedule update information for the City of Morgan Hill.

8. No progress payment will be processed prior to Architect receiving all requested, acceptable prevailing wage and certified payroll information.

D. Progress Payments:

1. Upon receiving Contractor's payment request, Architect will review the payment request and make necessary adjustments to percent of completion of each activity. One copy will be returned to Contractor with description of adjustments made. All parties will update percentage of completion values in the same manner, that is, express value of an accumulated percentage of completion to date.

2. The payment request may be reviewed by Architect, Architect/Engineer and/or inspectors, for the purpose of determining that the payment request is a proper payment request, and shall be rejected, revised or approved by the Architect pursuant to the cost breakdown prepared in accordance with Section 1.7B of this Section.

3. If it is determined that the payment request is not a proper payment request suitable for payment, Architect shall return it to the Contractor as soon as practicable, but no later than seven (7) days after receipt, together with a document setting forth in writing the reasons why the payment request is not proper.

4. Pursuant to Public Contract Code Section 20104.50, if the City of Morgan Hill fails to make any progress payment within thirty (30) days after receipt of an undisputed and properly submitted payment request from a contractor, the City of Morgan Hill shall pay interest to the Contractor equivalent to the legal rates set forth in subdivision (a) of Section 685.010 of the Code of Civil Procedure. The thirty (30) day period shall be reduced by the number of days by which the City of Morgan Hill exceeds the seven (7) day return requirement set forth herein.

5. As soon as practicable after approval of each request for progress payment, the City of Morgan Hill will pay to Contractor in manner provided by law, an amount equal to ninety percent (90%) of Architect's estimate, or a lesser amount if so provided in Contract Documents, provided that payments may at any time be withheld if, in judgment of Architect, Work is not proceeding in accordance with Contract, or Contractor is not complying with requirements of Contract.

6. Before any progress payment or final payment is made, the Contractor may be required to submit satisfactory evidence that Contractor is not delinquent in payments to employees subcontractors, suppliers, or creditors for labor and materials incorporated into Work.

7. The City of Morgan Hill reserves and shall have the right to withhold payment for any equipment and/or specifically fabricated materials that, in the sole judgment of the Architect, is not adequately and properly protected against weather and/or damage, prior to or following incorporation into the Work.

8. Granting of progress payment or payments by the City of Morgan Hill or receipt thereof by Contractor, shall not be understood as constituting in any sense acceptance of Work or of any portion thereof, and shall in no way lessen liability of Contractor to replace unsatisfactory work or material, though unsatisfactory character of work or material may have been apparent or detected at time payment was made.

9. When the City of Morgan Hill shall charge sum of money against Contractor under any provision of Contract, amount of charge shall be deducted and retained by the City of Morgan Hill from amount of next succeeding progress payment or from any other monies due or that may become due Contractor under Contract. If, on completion or termination of Contract, such monies due Contractor are found insufficient to cover the City of Morgan Hill charges against him, the City of Morgan Hill shall have right to recover balance from Contractor or Sureties.

1.9 RETENTION

A. Pursuant to provisions of Public Contract Code Section 22300, substitution of securities for any monies withheld under Contract to insure performance is permitted under following conditions:

1. At request and expense of Contractor, securities listed in Section 16430 of the Government Code, bank or savings and loan certificates of deposit, interest bearing demand deposit accounts, standby letters of credit, or any other security mutually agreed to by Contractor and the City of Morgan Hill which are equivalent to the amount withheld under retention provisions of Contract shall be deposited with Controller or with a state or federally chartered bank in California, as the escrow agent, who shall then pay such monies to Contractor. Upon satisfactory completion of Contract, securities shall be returned to Contractor.

2. Alternatively, Contractor may request and the City of Morgan Hill shall make payment of retentions earned directly to the escrow agent at the expense of the Contractor. At the expense of the Contractor, the Contractor may direct the investment of the payments into securities and the Contractor shall receive the interest earned on the investments

upon the same terms provided for in this Section for securities deposited by the Contractor. Upon satisfactory completion of the Contract, the Contractor shall receive from escrow agent all securities, interest, and payments received by the escrow agent from the City of Morgan Hill, pursuant to the terms of this Section. The Contractor shall pay to each subcontractor, not later than twenty (20) days after receipt of the payment, the respective amount of interest earned, net of costs attributed to retention withheld from each subcontractor, on the amount of retention withheld to insure the performance of the Contractor.

3. Contractor shall be beneficial owner of securities substituted for monies withheld and shall receive any interest thereon.

4. Contractor shall enter into escrow agreement with Controller as authorized under Public Contract Code Section 22300, specifying amount of securities to be deposited, terms and conditions of conversion to cash in case of default of Contractor, and termination of escrow upon completion of Contract.

1.10 FINAL PAYMENT

A. As soon as practicable after all required Work is completed in accordance with Contract, including Contractor maintenance after Final Acceptance, the City of Morgan Hill will pay to Contractor, in manner provided by law, unpaid balance of contract price of Work, or whole contract price of Work if no progress payment has been made, determined in accordance with terms of Contract, less sums as may be lawfully retained under any provisions of Contract or by law.

B. Prior progress payments shall be subject to correction in the final payment. Architect's determination of amount due as final payment shall be final and conclusive evidence of amount of Work performed by Contractor under Contract, and shall be full measure of compensation to be received by Contractor.

C. Contractor and each assignee under an assignment in effect at time of final payment, and as a condition precedent to final payment, shall release the City of Morgan Hill, its officers, agents, employees, Architect and all consultants from liabilities, obligations, and claims arising under Contract.

1.11 EFFECT OF PAYMENT

A. Payment will be made by the City of Morgan Hill, based on the Architect's observations at the site and the data comprising the Application for Payment. Payment will not be a representation that the Architect has:

1. Made exhaustive or continuous on-site inspections to check the quality or quantity of Work;

2. Reviewed construction means, methods, techniques, sequences or procedures;

3. Reviewed copies of requisitions received from subcontractors and material suppliers and other data requested by the City of Morgan Hill to substantiate Contractor's right to payment; or

4. Made examination to ascertain how or for what purpose Contractor has used money previously paid on account of the Contract Sum.

2.0 PRODUCTS

A. Not applicable to this Section.

3.0 EXECUTION

A. Not applicable to this Section.

END OF SECTION

SECTION 012600 - MODIFICATION PROCEDURES

1.0 GENERAL

1.1 SUMMARY

A. This Section includes all labor, materials, equipment, operations, or methods listed, mentioned or scheduled on the plans and/or herein specified, including all incidentals necessary and required for completion of work under this Section.

B. This Section includes the description of general procedural requirements for alterations, modifications and extras.

1.2 RELATED SECTIONS

A. Documents affecting work of this Section include, but are not necessarily limited to, General Conditions, Special Conditions and Division 1 of these Contract Documents.

B. Section 011000 - Summary of Work

C. Section 012100 - Project Control System

D. Section 012200 - Unit Prices: Measurement and Payment

E. Section 012613 - Requests for Information

1.3 GENERAL

A. Any change in scope of work or deviation from Drawings or Specifications shall be accomplished only when authorized in writing by Architect.

B. Changes in scope of Work or deviation from Drawings or Specifications may be initiated only by the Contractor or the Architect.

1. Contractor may initiate changes by submitting Requests for Information (RFI), Notice of Concealed or Unknown Conditions, or Notice of Hazardous Waste Conditions.

   a. RFIs shall be submitted to seek clarification of Contract Documents.

2. Contractor shall be responsible for its costs to implement and administer RFIs throughout the Contract duration. Regardless of the number of RFIs submitted, Contractor will not be entitled to additional compensation. Contractor shall be responsible for both the City of

Morgan Hill's Architect's administrative costs for answering its RFIs where the answer could reasonably be found by reviewing the Contract Documents, as determined by Architect; such costs will be deducted from progress payments.

3. Architect may initiate changes by issuing a Supplemental Instruction.

4. Architect may initiate changes by issuing Requests For Proposal (RFP) to Contractor. Such RFPs will detail all proposed changes in the Work and request a quotation of changes in Contract Sum and Contract Times from Contractor.

1.4 PROCEDURE

A. Contractor shall submit RFI to Architect. Architect shall respond by issuing a Clarification.

1. If Contractor is satisfied with the Clarification and does not request change in Contract Sum or Contract Times, then the Clarification shall be executed without a change.

2. If Contractor believes that the Clarification results in change in Contract Sum or Contract Times, Contractor shall notify Architect who may then deny request for change or issue RFP.

B. Contractor shall submit Notices of Concealed or Unknown Conditions to resolve unanticipated conditions incurred in the execution of the Work. If Architect determines that a change in Contract Sum or contract Times is justified, Architect shall issue RFP. Architect shall issue Supplemental Instruction to Contractor. Contractor shall not proceed with Supplemental Instruction until Architect approves it in writing.

1. If Contractor is satisfied with Supplemental Instruction and does not request change in Contract Sum or Contract Times, then Supplemental Instruction shall be executed without a Change Order.

2. If Contractor believes that Supplemental Instruction results in change in Contract Sum or Contract Times, Contractor shall notify Architect. Architect may then deny request for change, cancel Clarification or issue RFP.

C. Responses by recipients shall be within a reasonable time.

D. Contractor shall respond to Architect's RFP within fifteen (15) working days by furnishing a complete breakdown of costs of both credits and extras;

itemizing materials, labor, taxes, overhead and profit. Subcontract work shall be so indicated.

E. Upon approval of RFP, Architect will issue a Change Order directing Contractor to proceed with extra work.

F. Payment shall be made as follows:

1. Change Orders which increase Contract Sum or Contract Times shall be included in next Contract Modification Form, signed by Architect, accepted by Contractor.

2. Payment shall be made for Change Order work along with other work in progress payment following completion of Change Order work. Partial completion of Change Order work shall be paid for that part completed during the period covered by the monthly payment request.

1.5 COST DETERMINATION

A. Total cost of extra work shall be the sum of labor costs, material costs, equipment rental costs and specialist costs as defined herein plus overhead and profit as allowed herein. This limit applies in all cases of claims for extra work, whether calculating Change Orders, RFPs, or calculating claims of all types, and applies even in the event of fault, negligence, strict liability, or tort claims of all kinds, including misrepresentation, concealment, strict liability or negligence. No other costs arising out of or connected with the performance of extra work, of any nature, may be recovered by Contractor. No special, incidental or consequential damages may be claimed or recovered against the City of Morgan Hill, its representatives or agents, whether arising from breach of contract, negligence or strict liability, unless specifically authorized in the Contract Documents.

B. Overhead and Profit:

1. Overhead shall be as defined in Article 1.8, below.

2. Overhead and profit on labor for extra work shall be 15 percent (15%).

3. Overhead and profit on materials for extra work shall be 15 percent (15%).

4. Overhead and profit on equipment rental for extra work shall be 15 percent (15%).

5. When extra work is performed by a first tier subcontractor, Contractor shall receive a 10 percent (10%) markup on subcontractors' total costs of extra work.

6. When extra work is performed by a lower tier subcontractor, Contractor shall receive a 10 percent (10%) markup on the lower tier subcontractors' total costs of extra work. Contractor and first tier subcontractors shall divide the markup as mutually agreed.

7. Credit for overhead and profit on deleted work shall be 5% for the Contractor actually performing the work plus applicable reductions insurance and bond cost.

C. Taxes:

1. Santa Clara County Sales Tax should be included.

2. Federal and Excise Tax shall not be included.

D. City of Morgan Hill-Operated Equipment: When City-operated equipment is used to perform extra work, Contractor will be paid for equipment and operator as follows:

1. Payment for equipment will be made in accordance with Paragraph 1.6D, below.

2. Payment for cost of labor will be made at no more than rates of such labor established by State of California Department of Industrial Relations schedule of Prevailing Wages at the time such work was performed, whether or not the labor was actually covered by such an agreement.

1.6 COST BREAKDOWN

A. Contractor to submit complete breakdown cost proposal identifying labor hours x rate, material quantity x unit price, equipment rental hours x rate and subcontract cost proposals. Markups shall be shown as a separate line-item on the proposal in accordance with Article 1.4B, above. Subcontractors and vendors shall also provide cost breakdowns in accordance with the requirements of the Contract and this Section.

B. Labor: Contractor will be paid cost of labor for workers (including forepersons when authorized by Architect) used in actual and direct performance of extra work. Labor rate, whether employer is Contractor, subcontractor or other forces, will be sum of following:

1. Actual Wages - Actual wages paid shall include any employer payments to or on behalf of workers for health and welfare, pension, vacation and similar purposes.

2. Labor Surcharge - Payments imposed by the City of Morgan Hill, State and Federal laws and ordinances, and other payments made to, or on behalf of, workers, other than actual wages as defined in subparagraph 1 above, such as taxes and insurances. Labor surcharge shall be as set forth in California Department of Industrial Relations labor rate classification schedule which is in effect on date upon which extra work is accomplished and which schedule is incorporated herein by reference as though fully set forth herein.

C. Material: Only materials furnished by Contractor and necessarily used in performance of extra work will be paid for. Cost of such materials will be cost, including sales tax, to purchaser (Contractor, subcontractor or other forces) from supplier thereof, except as the following are applicable:

1. If cash or trade discount by actual supplier is offered or available to purchaser, it shall be credited to the City of Morgan Hill notwithstanding fact that such discount may not have been taken.

2. For materials salvaged upon completion of extra work, salvage value of materials shall be deducted from cost, less discount, of materials.

3. If cost of a material is, in opinion of Architect, excessive, then cost of material shall be deemed to be lowest current wholesale price at which material is available in quantities concerned delivered to Site, less any discounts as provided in subparagraph 1 above.

D. Equipment Rental: For Contractor or subcontractor-owned equipment, payment will be made at rental rates listed for equipment in California Department of Transportation official equipment rental rate schedule which is in effect on date upon which extra work is accomplished and which schedule is incorporated herein by reference as though fully set forth herein. For rented equipment, payment will be made based on actual rental invoices. Equipment used on extra work shall be of proper size and type. If, however, equipment of unwarranted size or type and cost is used, cost of use of equipment shall be calculated at rental rate for equipment of proper size and type. Rental rates paid shall be deemed to cover cost of fuel, oil, lubrication, supplies, small tools, necessary attachments, repairs and maintenance of any kind, depreciation, storage, insurance, and all incidentals. Unless otherwise specified, manufacturer's ratings, and manufacturer approved modifications, shall be used to classify equipment for determination of applicable rental rates. Individual pieces of equipment or tools not listed in said publication and having a replacement value of one hundred dollars ($100) or less, whether or

not consumed by use, shall be considered to be small tools and no payment will be made therefor as payment is included in payment for labor. Rental time will not be allowed while equipment is inoperative due to breakdowns.

1. For equipment on Site, rental time to be paid for equipment shall be time equipment is in operation on extra work being performed or on standby as approved by Architect. The following shall be used in computing rental time of equipment:

    a. When hourly rates are listed, less than thirty (30) minutes of operation shall be considered to be one-half (1/2) hour of operation.

    b. When daily rates are listed, less than four (4) hours of operation shall be considered to be one-half (1/2) day of operation.

2. For equipment which must be brought to Site to be used exclusively on extra work, cost of transporting equipment to Site and its return to its original location shall be determined as follows:

    a. The City of Morgan Hill will pay for costs of loading and unloading equipment.

    b. Cost of transporting equipment in low bed trailers shall not exceed hourly rates charged by established haulers.

    c. Cost of transporting equipment shall not exceed applicable minimum established rates of California Public Utilities Commission.

    d. Payment for transporting, and loading and unloading equipment as above provided will not be made if equipment is used on Work in any other way than upon extra work.

3. Rental period shall begin at time equipment is unloaded at Site of extra work and terminate at end of day on which Architect directs Contractor to discontinue use of equipment. Excluding Saturdays, Sundays, and legal holidays, unless equipment is used to perform extra work on such days, rental time to be paid per day shall be four (4) hours for zero (0) hours of operation, six (6) hours for four (4) hours of operation and eight (8) hours for eight (8) hours of operation, time being prorated between these parameters. Hours to be paid for equipment which is operated less than eight (8) hours due to breakdowns, shall not exceed eight (8) less number of hours equipment is inoperative due to breakdowns.

E. Work Performed by Special Forces or Other Special Services: When Architect and Contractor, by agreement, determine that special service or item of extra work cannot be performed by forces of Contractor or those of any subcontractors, service or extra work item may be performed by specialist. Invoices for service or item of extra work on basis of current market price thereof may be accepted without complete itemization of labor, material, and equipment rental costs when it is impracticable and not in accordance with established practice of special service industry to provide complete itemization. In those instances wherein Contractor is required to perform extra work necessitating a fabrication or machining process in a fabrication or machine shop facility away from Site, charges for that portion of extra work performed in such facility may, by agreement, be accepted as a specialist billing. Architect must be notified in advance of all off site work. To specialist invoice price, less credit to the City of Morgan Hill for any cash or trade discount offered or available, whether or not such discount may have been taken, will be added 15 percent (15%) in lieu of overhead and profit provided in Paragraph 1.4B, above.

F. Deleted Work and Credits: When a change request, RFI, RFP, or Construction Change Directive includes both additive and deductive work, the total mark-up shall be on the net sum of the change.

1.7 FORCE-ACCOUNT

A. If it is impracticable because of nature of work, or for any other reason, to fix an increase or decrease in price definitely in advance, a Construction Change Directive may be issued in accordance with Article 7.3 Construction Change Directives from General Conditions of the Contract for Construction, AIA Document A201-1997 (included in Part A of this book) to fix a maximum price which shall not under any circumstances be exceeded, and subject to such limitation, such alteration, modification or extra shall be paid for at actual necessary cost as determined by the City of Morgan Hill, which cost shall be determined pursuant to Article 1.4, above, and shall be known as Force-Account work.

B. Whenever any Force-Account work is in progress, definite price for which has not been agreed on in advance, Contractor shall report to Architect each day in writing in detail amount and cost of labor and material used, and any other expense incurred in Force-Account work on preceding work day, and no claim for compensation for Force-Account work will be allowed unless report shall have been made.

C. Above described methods of determining payment for work and materials shall not apply to performance of work or furnishings of material which, in judgment of Architect, may properly be classified under items for which prices are established in Contract.

1.8 FURNISHED MATERIALS

A. The City of Morgan Hill reserves right to furnish materials as it deems advisable, and Contractor shall have no claims for costs and overhead and profit on such materials.

1.9 OVERHEAD DEFINED

A. The following constitutes charges that are included in overhead for all contract modifications, including Force-Account work:

1. Drawings: field drawings, shop drawings, etc. including submissions of drawings.

2. Routine field inspection of work proposed.

3. General Superintendence.

4. General administration and preparation of change orders.

5. Computer services.

6. Reproduction services.

7. Salaries of project engineer, project manager, superintendent, timekeeper, storekeeper and secretaries.

8. Janitorial services.

9. Temporary on-site facilities.

a. Offices

b. Telephones

c. Plumbing

d. Electrical: Power, lighting

e. Platforms

f. Fencing, and so on.

g. Home office expenses.

h. Procurement and use of vehicles and fuel used coincidentally in base bid work.

i. Surveying

j. Estimating

k. Protection of work

l. Final cleanup

m. Other incidental work

1.10 RECORDS AND CERTIFICATION

A. Force-Account (cost reimbursement) charges shall be recorded daily upon Cost Breakdown for Contract Modification Form obtained from or approved by the Architect. Contractor or authorized representative shall complete and sign form. Architect or Inspector shall sign form indicating approval of labor and equipment hours and material used only. Contract Modification Form shall provide names and classifications of workers and hours worked by each, itemize materials used, and also list size type and identification number of equipment, and hours operated, and shall indicate work done by specialists.

B. No payment for Force-Account work shall be made until Contractor submits original invoices substantiating materials and specialist charges.

C. The City of Morgan Hill shall have the right to audit all records in possession of Contractor relating to activities covered by Contractor's claims for modification of Contract, including Force-Account work, as set forth in Article 7.3 Construction Change Directives from General Conditions of the Contract for Construction, AIA Document A201-1997 (included in Part A of this book).

D. Further, the City of Morgan Hill shall have right to audit, inspect, or copy all records maintained in connection with this Contract, including financial records, in possession of Contractor relating to any transaction or activity occurring or arising out of, or by virtue of, Contract. If Contractor is a joint venture, right of the City of Morgan Hill shall apply collaterally to same extent to records of joint venture sponsor, and of each individual joint venture member.

2.0 PRODUCTS

A. Not applicable to this Section.

3.0 EXECUTION

A. Not applicable to this Section.

END OF SECTION

SECTION 012613 - REQUESTS FOR INFORMATION

1.0 GENERAL

1.1 SUMMARY

A. This Section includes the procedures to be followed by the Contractor upon discovery of any apparent conflicts, omissions, or errors in the contract documents, or upon having any questions concerning interpretation.

1.2 RELATED SECTIONS

A. Documents affecting work of this Section include, but are not necessarily limited to, General Conditions, Special Conditions and Division 1 of these Contract Documents.

B. Section 012100 - Project Control System

1.3 PROCEDURES

A. Notification by Contractor: Should the Contractor discover conflicts, omissions, or errors in the contract documents, or have any questions concerning interpretation or clarification of the contract documents, or if it appears to the contractor that work to be done or any matter relative thereto are not sufficiently detailed or explained in the contract documents, then, before proceeding with the work affected, the Contractor shall immediately notify the Architect in writing and request interpretation, clarification, or additional detailed instructions concerning the work. The Contractor shall ask for any clarification or request for information immediately upon discovery, but no less than fifteen (15) days prior to the start date of the activities related to the clarification, based on the latest updated version of the accepted contract schedule.

B. Form: The Contractor shall submit all requests for clarification and/or additional information in writing to the Architect using the Request For Information (RFI) procedure as outlined in Section 012100, Project Control System.

C. The Contractor will number RFIs consecutively with the date of issue, except for reissuance of a respective RFI in which the subscript a, b, c, and so on, will be added until the RFI is resolved.

D. Response Time: The Architect, whose decision will be final and conclusive, shall resolve such questions and issue instruction to the Contractor within a reasonable amount of time, but no less than 14 calendar days. In some cases, this time may need to be lengthened or shortened for emergency situations as mutually agreed upon by all parties. Should the Contractor proceed with the work affected before receipt of a response from the Architect within the response time described above, any portion of the work which is not done in accordance with the Architect's interpretation,

clarifications, instructions, or decisions subject to removal or replacement and the Contractor shall be responsible for all losses.

E. Reason for Submission: The Contractor may submit RFIs if one of the following conditions occur:

1. The Contractor discovers an unforeseen condition or circumstance that is not described in the contract documents.

2. The Contractor discovers an apparent conflict or discrepancy between portions of the contract documents and appears to be inconsistent or is not reasonably inferred from the intent of the contract documents.

3. The Contractor discovers what appears to be an omission from the contract documents that cannot be reasonably inferred from the intent of the contract documents.

F. Rejections: RFIs will not be recognized or accepted if in the opinion of the Architect one of the following conditions exists:

1. The Contract submits an RFI as a submittal.

2. The Contractor submits the RFI under the pretense of a contract documents discrepancy or omission without thoroughly reviewing the documents.

3. The Contractor submits the RFI in a manner that suggests that specific portions of the contract documents are assumed to be excluded, or taken as an isolated portion of the contract documents in part rather than whole.

4. The Contractor submits an RFI in an untimely manner without proper coordination and scheduling of work or related trades.

G. Subject: Each RFI shall be limited to one subject.

H. Additional Detailed Instructions: The Architect may furnish additional detailed written instructions to further explain the work, and such instructions shall be a part of the contract documents. Should additional detailed instructions in the opinion of the Contractor constitute work in excess of the scope of the contract the Contractor shall submit notification immediately and written notification thereof to the Architect no more than seven calendar days following receipt of such instruction, and in any event prior to the commencement of work thereon. The Architect will then consider such notice, and if the Architect considers it justified, the Architect's instructions will be revised or a proposed change order will be issued. The Contractor shall have no claim for additional compensation or extension of the schedule because of any such additional instructions unless the Contractor provides the Architect written notice thereof within the time frame specified above. In addition, the Contractor shall within 15 days from the date of notification provide detailed justification and analysis as well as compete pricing and schedule CPM network analysis to support any request for time extension. For more details, see Article 7 Changes in the Work from General

Conditions of the Contract for Construction, AIA Document A201-1997 (Part A of this book).

2.0 PRODUCTS

A. Not applicable to this Section.

3.0 EXECUTION

A. Not applicable to this Section.

END OF SECTION

SECTION 013113 - PROJECT COORDINATION

1.0 GENERAL

1.1 SUMMARY

A. This Section includes all labor, materials, equipment, operations, or methods listed, mentioned or scheduled on the plans and/or herein specified, including all incidentals necessary and required for completion of work under this Section.

B. Coordinate the Work; do not delegate the responsibility for coordination to any Subcontractor.

1. Resolve differences or disputes concerning coordination, interference, or extent of Work of the various Sections.

2. The Contractor's decisions regarding work by subcontractors, if consistent with the requirements of the Contract Documents, shall be final.

C. Coordinate Work to assure efficient and orderly sequence of installation of construction elements.

D. Perform and complete checking and coordination before commencing Work in the affected areas.

E. Verify characteristics of interrelated operating equipment are compatible; coordinate Work having interdependent responsibilities for installing, connection to, and placing such equipment in service.

F. Provide basic layouts of grid lines and station points on subfloors as necessary to facilitate coordination and layout of partitions and Work at and above ceilings.

G. Make provisions for accommodating Work to be provided by others.

1.2 RELATED SECTIONS

A. Documents affecting work of this Section include, but are not necessarily limited to, General Conditions, Special Conditions and Division 1 of these Contract Documents.

1.3 COORDINATION DRAWINGS

A. Prepare large-scale coordination drawings before beginning fabrication or delivery of materials and equipment to the job site.

1. Drawings shall clearly indicate coordination of mechanical, electrical, and equipment installations with structural and architectural elements.

B. Keep copies of coordination drawings at the job site.

C. The Architect will verify that coordination drawings have been made, but no review of the drawings will be made.

1.4 MECHANICAL AND ELECTRICAL COORDINATION

A. Use coordination drawings of mechanical and electrical Work, together with Shop Drawings and layout drawings of affected Work to check; coordinate and integrate the Work to prevent interferences.

B. Coordinate space requirements and installation of mechanical and electrical Work which are indicated diagrammatically on Drawings.

C. Routing shown for pipes, ducts, and conduits is diagrammatic only; make runs parallel with lines of building.

D. Utilize spaces efficiently to maximize accessibility for other installation, for maintenance, and for repairs.

E. Conceal pipes, ducts, and wiring in finished areas, unless otherwise indicated; coordinate locations of fixtures and outlets with finish elements.

2.0 PRODUCTS

A. Not applicable to this Section.

3.0 EXECUTION

A. Not applicable to this Section.

END OF SECTION

SECTION 013119 - PROJECT MEETINGS

1.0 GENERAL

1.1 PRECONSTRUCTION CONFERENCE

A. Prior to commencement of Work, a preconstruction conference will be held to discuss procedures to be followed during the progress of the Work.

1. The preconstruction conference will be held at a location designated by the Architect.

B. Attending the conference shall be:

1. Morgan Hill Library’s representatives.
2. City of Morgan Hill representatives.
3. Architect's representatives.
4. Morgan Hill Library’s consultants.
5. Architect's subconsultants.
6. Contractor's representatives.
7. Contractor's superintendent.
8. Designated major Subcontractors.
9. Others requested by the Architect.

1.2 PROGRESS MEETINGS

A. Weekly progress meetings will be held throughout the progress of the Work; location shall be in Architect's field office.

B. The Architect will prepare agenda with copies for participants, preside at meetings, record minutes and distribute copies within three (3) work days to the Architect, meeting participants, and those affected. Procore will be used for the meeting documentation.

C. Attendance and Participation: Project superintendent, Morgan Hill Library, Architect, Architect's subconsultants, City of Morgan Hill representatives, Library’s representative consultants, and major subcontractors as appropriate to agenda topics for each meeting.

D. Suggested Agenda: Review of Work progress, status of progress CPM schedule and adjustments, delivery schedules, submittal status report, RFI status report, maintenance of quality standards, pending changes, and substitutions.

E. Special Meetings: Schedule and administer other meetings as required by the progress of the Work and to review provisions and tests specified elsewhere in the Contract Documents.

1. Schedule special meetings when so requested by the Architect.

1.3 BILLING MEETINGS

A. As part of the last progress meeting each month, schedule and hold a billing meeting, with the Architect in attendance.

1. Purpose of billing meeting is for agreeing on the percentage of Work completed to that date and to establish the sum to be requested in the Application for Payment.

B. Prepare an itemized draft of the month's proposed billing for review at the meeting.

1.4 PRE-INSTALLATION/APPLICATION MEETINGS

A. Meetings to review installation and application shall be scheduled a minimum of fourteen (14) days prior to the start of installations and applications.

1. Attending shall be Project superintendent, Morgan Hill Library, the City of Morgan Hill, Architect, manufacturers' representatives and installers of products involved, other installers whose Work may affect or be affected by the Work to be reviewed, and Testing Laboratory Inspector.

B. Review in detail the Contract Documents and manufacturers' requirements, Specifications, installation drawings and details, and Drawings and Details of affected Work.

1. Resolve discovered and anticipated conflicts, incompatibilities, and inadequacies at the conference.

C. Review in detail Project conditions, schedules, construction sequence, requirements for applications and qualities of completed applications, and protection of adjacent Work and property.

D. Review in detail means of protecting the completed applications during the remainder of the construction period.

1.5 SCHEDULE APPROVAL MEETINGS

A. Prior to approval of the CPM schedule, the Architect may require that the Contractor and its Subcontractors attend meetings to ascertain information for approval of the CPM schedule.

B. This information may include, but will not be limited to, productivity, manpower loading, equipment planning, activity durations, logic, cost loading, and other pertinent matters.

C. Attending shall be the Contractor, Subcontractors as appropriate, suppliers as appropriate, and others as appropriate.

2.0 PRODUCTS

A. Not applicable to this Section.

3.0 EXECUTION

A. Not applicable to this Section.

END OF SECTION

SECTION 013200 - CONSTRUCTION PROGRESS DOCUMENTATION: SCHEDULES AND REPORTS

1.0 GENERAL

1.1 SUMMARY

A. This Section includes all labor, materials, equipment, operations, or methods listed, mentioned or scheduled on the plans and/or herein specified, including all incidentals necessary and required for completion of work under this Section.

B. Scheduling of Work under this Contract shall be performed by Contractor in accordance with requirements of this Section.

C. Upon Award of Contract, Contractor shall immediately commence development of the Schedule to ensure compliance with schedule submittal requirements.

D. Contract schedule shall be based on and incorporate Contract milestone and completion dates specified in Contract Documents.

E. Overall time of completion and time of completion for each milestone shown on Contract schedule shall adhere to times specified in the Contract Special Provisions.

1. The Architect is not required to accept an earlier (advanced) schedule.

2. Contractor shall not be entitled to any compensation for any field or home office overhead in event agreement is not reached on an earlier (advanced) schedule and Contractor completes its Work, for whatever reason, beyond completion date shown in earlier (advanced) schedule.

3. A schedule showing the work completed in less than the Contract time, which has been accepted by the Architect, shall be considered to have Project Float. The Project Float is the time between the scheduled completion of the work and Contract Substantial Completion.

4. Project Float is a resource available to both the Architect and the Contractor.

F. Contract schedule shall be basis for evaluating job progress, payment requests, and time extension requests. Responsibility for developing Contract CPM schedule and monitoring actual progress as compared to schedule rests with Contractor.

G. Failure of Contract schedule to include any element of the Work or any inaccuracy in Contract Schedule will not relieve Contractor from responsibility for accomplishing the Work in accordance with the Contract.

H. Float Ownership:

1. The Project owns the float. As such, liability for delay of the Substantial Completion Date rests with the party whose actions, last in time, actually cause delay to the Substantial Completion.

a. For example, if Party A uses some, but not all of the float and Party B later uses remainder of the float as well as additional time beyond the float, Party B shall be liable for the time that represents a delay to the Substantial Completion Date.

b. Under this scenario, Party A would not be responsible for the time since it did not consume all of the float and additional float remained; therefore, the Substantial Completion Date was unaffected.

I. Progress Schedule shall be the basis for evaluating job progress, payment requests, and time extension requests. Responsibility for developing Contract schedule and monitoring actual progress as compared to Progress Schedule rests with Contractor.

J. Failure of Progress Schedule to include any element of the Work or any inaccuracy in Progress Schedule will not relieve Contractor from responsibility for accomplishing the Work in accordance with the Contract. The City of Morgan Hill's acceptance of Schedule shall be for its use in monitoring and evaluating job progress, payment requests, and time extension requests, and shall not, in any manner, impose a duty of care upon the City of Morgan Hill or act to relieve Contractor of its responsibility for means and methods of construction.

1.2 RELATED SECTIONS

A. Documents affecting work of this Section include, but are not necessarily limited to, General Conditions, Special Conditions and Division 1 of these Contract Documents.

1.3 ORIGINAL CPM SCHEDULE

A. Within thirty (30) calendar days after the Notice to Proceed date, submit a detailed proposed Original CPM Schedule presenting an orderly and realistic plan for completion of the Work, in conformance with requirements as specified herein.

B. Contract schedule shall furnish or comply with following requirements:

1. Time-scaled CPM schedule.

2. No activity on schedule shall have duration longer than fifteen (15) workdays, with exception of submittal, approval, fabrication and procurement activities, unless otherwise approved by the Architect.

   a. Activity durations shall be total number of actual work days required to perform that activity excluding consideration of weather impact on completion of that activity.

3. Procurement of major equipment, through receipt and inspection at jobsite, identified as a separate activity.

4. District furnished materials and equipment, if any, identified as separate activities.

5. Dependencies (or relationships) between activities.

6. Processing/approval of submittals and shop drawings for all Contract-required material and equipment. Activities that are dependent on submittal acceptance or material delivery shall not be scheduled to start earlier than expected acceptance or delivery dates.

   a. The duration for review and approval of submittals and shop drawings shall be as specified in Section 013300, Submittal Procedures. Contractor shall be responsible for all impacts resulting from resubmittal of shop drawings and submittals.

7. Twenty (20) workdays for developing punch list(s), completion of punch list items, and final clean-up for the Work or any designated portion thereof.

   a. No other activities shall be scheduled during this period.

8. Interface with the Work of other contractors (and agencies such, as but not limited to, utility companies).

9. Show detailed Subcontractor Work activities.

10. Activity durations shall be in Work days.

C. Adjustments to Original CPM Schedule: Within fourteen (14) calendar days after receipt of the Architect's response to the Contractor's Original CPM Schedule, the Contractor shall have adjusted the Original CPM Schedule

submittal to address all review comments and resubmit for the Architects review.

1. The Architect, within ten (10) calendar days from date that Contractor submitted the revised schedule, will either (1) accept schedule as submitted, or (2) advise Contractor in writing to review any part or parts of schedule which either do not meet Contract requirements or are unsatisfactory for the Architect to monitor Project's progress, resources and status or evaluate monthly payment request by Contractor.

2. The Architect may accept schedule with conditions. At the first monthly meeting the CPM schedule update shall be revised to correct deficiencies identified.

3. When schedule is accepted, it shall be considered as the "Original CPM Schedule" which will then be immediately updated to reflect the current status of the work.

4. The Architect reserves right to require the Contractor to adjust, add to, or clarify any portion of schedule which may later be discovered to be insufficient for monitoring of Work or approval of partial payment requests. No additional compensation will be provided for such adjustments, additions, or clarifications.

D. Acceptance: Acceptance of Contractor's schedule by the Architect will be based solely upon schedule's compliance with Contract requirements.

1. By way of Contractor assigning activity durations and proposing sequence of Work, Contractor agrees to utilize sufficient and necessary management and other resources to perform work in accordance with the schedule.

2. Upon submittal of schedule update, updated schedule shall be considered "current" CPM schedule.

3. Submission of Contractor's schedule to the Architect shall not relieve Contractor of total responsibility for scheduling, sequencing, and pursuing Work to comply with requirements of Contract Documents, including adverse effects such as delays resulting from ill-timed work.

E. Submittal of Original CPM Schedule, and subsequent schedule updates, shall be understood to be Contractor's representation that the Schedule meets requirements of Contract Documents and that Work shall be executed in sequence indicated on the schedule.

F. Contractor shall distribute Original CPM Schedule to Subcontractors for review and acceptance.

1.4 MONTHLY CPM SCHEDULE UPDATE SUBMITTALS

A. Following acceptance of Contractor's Original CPM Schedule, Contractor shall monitor progress of Work and adjust schedule each month to reflect actual progress and any anticipated changes to planned activities.

1. Each schedule update submitted shall be complete, including all information requested for the Original CPM Schedule submittal.

2. Each update shall continue to show all work activities including those already completed.

3. These completed activities shall accurately reflect "as built" information by indicating when activities were actually started and completed.

4. Within seven (7) calendar days of receipt of above noted update, the Architect will either accept or reject monthly schedule update submittal.

a. If accepted, percent complete shown in monthly update will be basis for Application for Payment by the Contractor. The schedule update shall be submitted as part of the Contractor's Application for Payment.

b. If rejected, update shall be corrected and resubmitted by Contractor before the Application for Payment is submitted.

1.5 SCHEDULE REVISIONS

A. Updating the Schedule to reflect actual progress shall not be considered revisions to the Schedule. Since scheduling is a dynamic process, revisions to activity durations and sequences are expected on a monthly basis.

B. If the Contractor's revision is not accepted by the Architect, and the Contractor disagrees with the Architect's position, the Contractor has seven (7) calendar days from receipt of the Architect's letter, to provide a written narrative explaining its position. If the Architect still does not agree with the Contractor's position, the Architect's position shall govern, and the schedule shall be updated in accordance with the Architect's request. The Contractor's failure to respond in writing within seven (7) calendar days shall be contractually interpreted as acceptance of the Architect's position, and the

Contractor waives its rights to subsequently dispute or file a claim regarding the Architect's position.

C. At the Architect's discretion, the Contractor can be required to provide subcontractor certifications for revisions affecting said subcontractors.

1.6 RECOVERY SCHEDULE

A. If the Schedule Update shows a substantial completion date fourteen (14) calendar days beyond the Contract Substantial Completion date, the Contractor shall submit to the Architect the proposed revisions to recover the lost time within seven (7) calendar days. As part of this submittal, the Contractor shall provide a written narrative for each revision made to recapture the lost time.

B. If the Contractor's revisions are not accepted by the Architect, the Contractor shall follow the procedures in Paragraph 1.4, above.

C. At the Architect's discretion, the Contractor can be required to provide subcontractor certifications for revisions affecting said subcontractors.

1.7 TIME IMPACT EVALUATION FOR CHANGE ORDERS, AND OTHER DELAYS

A. When the Contractor is directed to proceed with changed work, the Contractor shall prepare and submit, within fourteen (14) calendar days from the direction to proceed, a Time Impact Evaluation (TIE) which includes both a written narrative and a schedule diagram depicting how the changed work affects other schedule activities. The schedule diagram shall show how the Contractor proposes to incorporate the changed work in the schedule, and how it impacts the current schedule update critical path. The Contractor is also responsible for requesting time extensions based on the TIE's impact on the critical path. The diagram must be tied to the main sequence of schedule activities to enable the City of Morgan Hill to evaluate the impact of changed work to the scheduled critical path.

B. The Contractor shall be required to comply with the requirements of Paragraph 1.6A, above, for all types of delays such as, but not limited to, Contractor/Subcontractor delays, adverse weather delays, strikes, procurement delays, fabrication delays, and so on.

C. The Contractor shall be responsible for all costs associated with the preparation of Time Impact Evaluations, and the process of incorporating them into the current schedule update.

D. Once agreement has been reached on a TIE, the Contract Times will be adjusted accordingly. If agreement is not reached on a TIE, the Contract

Times may be extended in an amount the City of Morgan Hill allows, and the Contractor may submit a claim for additional time claimed by contractor.

1.8 TIME EXTENSIONS

A. The Contractor is responsible for requesting time extensions for time impacts that, in the opinion of the Contractor, impact the critical path of the current schedule update. Notice of time impacts shall be given in accordance with Article 4 and 8 of the Contract General Conditions.

B. Where an event for which the City of Morgan Hill is responsible impacts the projected Substantial Completion date, the Contractor shall provide a written mitigation plan, including a schedule diagram, which explains how (for example, increase crew size, overtime, and so on) the impact can be mitigated. The Contractor shall also include a detailed cost breakdown of the labor, equipment and material the Contractor would expend to mitigate the City of Morgan Hill caused time impact. The Contractor shall submit its mitigation plan to the City of Morgan Hill within fourteen (14) calendar days from the date of discovery of said impact. The Contractor is responsible for the cost to prepare the mitigation plan.

C. Failure to request time, provide TIE, or provide the required mitigation plan will result in Contractor waiving its right to a time extension and cost to mitigate the delay.

D. No time will be granted under this Contract for cumulative effect of changes.

E. The City of Morgan Hill not be obligated to consider any time extension request unless requirements of Contract Documents are complied with.

F. Failure of the Contractor to perform in accordance with the current schedule update shall not be excused by submittal of time extension requests.

G. If the Contractor does not submit a TIE within the required fourteen (14) calendar days for any issue, it is mutually agreed that the Contractor does not require a time extension for said issue.

H. The City of Morgan Hill will grant day-for-day non-compensable time extensions for delays to the critical path due to inclement weather.

2.0 PRODUCTS

A. Not applicable to this Section.

3.0 EXECUTION

A. Not applicable to this Section.

END OF SECTION

SECTION 013300 - SUBMITTAL PROCEDURES

1.0 GENERAL

1.1 SUMMARY

A. This Section includes all labor, materials, equipment, operations, or methods listed, mentioned or scheduled on the plans and/or herein specified, including all incidentals necessary and required for completion of work under this Section.

B. This Section describes general requirements for submittals for the work specified in these Contract Documents.

1. Procedures.
2. Safety Plan.
3. Progress Schedule.
4. Shop Drawings.
5. Samples.
6. Quality Control Submittals.
   a. Design Data.
   b. Test Reports.
   c. Certificates.
   d. Manufacturers' Instructions.
7. Operations and Maintenance Manuals.
8. Project Record Documents.

1.2 RELATED SECTIONS

A. Documents affecting work of this Section include, but are not necessarily limited to, General Conditions, Special Conditions and Division 1 of these Contract Documents.

B. Section 011000 - Summary of Work

C. Section 012100 - Project Control System

D. Section 012200 - Unit Prices: Measurement and Payment

E. Section 012600 - Modification Procedures

F. Section 017700 - Contract Closeout Procedures

1.3 PROCEDURES

A. Provide all submittals through Procore

B. Submit at own expense Schedule of Shop Drawing and Sample Submittals, Safety Plans, Progress Schedule, Product Data, Shop Drawings, Samples, Operations and Maintenance Manuals, and Project Record Documents required by the Contract Documents.

C. Transmit each item with a standard letter of transmittal in form approved by Architect.

D. Identify project, Contractor, subcontractor, major supplier, pertinent drawing sheet and data number, and specification Section number as appropriate. Provide space for Contractor and Architect review stamps.

E. Where manufacturer's standard drawings or data sheets are used, they shall be marked clearly show those portions of the data which are applicable to this project.

F. Submit Shop Drawings, Samples and other submittals to Architect for review and approval in accordance with accepted Contract Schedule. If no such schedule is agreed upon, then all Shop Drawing, Samples and product data submittals shall be completed within thirty (30) days after receipt of Notice to Proceed from the City of Morgan Hill. The data shown on the Shop Drawings shall be complete with respect to quantities, dimensions, specified performance and design criteria, materials and similar data to show Architect the materials and equipment Contractor proposes to provide and to enable Architect to review the information for the limited purposes specified below. Samples shall be identified clearly as to material, supplier, pertinent data such as catalog numbers and the use for which it is intended and otherwise as Architect may require to enable Architect to review the submittal. The number of each Sample to be submitted will be as specified in the Specifications.

G. At the time of each submission, Contractor shall give Architect specific written notice of all variations, if any, that the Shop Drawing or Sample submitted may have from the requirements of the Contract Documents, and the reasons therefore. This written notice shall be in a written communication separate from the submittal. In addition, Contractor shall cause a specific notation to be made on each Shop Drawing and Sample submitted to Architect

for review and approval of each such variation. If the City of Morgan Hill accepts deviation, the District shall issue appropriate Contract Modification.

H. Submittal coordination and verification is responsibility of Contractor; this responsibility shall not be delegated in whole or in part to subcontractors or suppliers. Before submitting each Shop Drawing or Sample, Contractor shall have determined and verified:

1. All field measurements, quantities, dimensions, specified performance criteria, installation requirements, materials, catalog numbers and similar information with respect thereto;

2. All materials with respect to intended use, fabrication, shipping, handling, storage assembly and installation pertaining to the performance of the Work;

3. All information relative to Contractor's sole responsibilities and of means, methods techniques, sequences and procedures of construction and safety precautions and programs incident thereto.

I. Contractor shall also have reviewed and coordinated each Shop Drawing or Sample with other Shop Drawings and Samples and with the requirements of the Work and the Contract Documents.

J. Contractor's submission to Architect of a Shop Drawing or Sample submittal will constitute Contractor's representation that it has satisfied its obligations under the Contract Documents, and as set forth immediately above, with respect to Contractor's review and approval of that submittal.

K. Designation of work "by others," if shown in submittals, shall mean that work will be responsibility of Contractor rather than subcontractor or supplier who has prepared submittals.

L. After review by Architect of each of Contractor's submittals, one of set of duplicates of material will be returned to Contractor with actions defined as follows:

1. APPROVED - Accepted subject to its compatibility with future submittals and additional partial submittals for portions of the work not covered in this submittal. Does not constitute approval or deletion of specified or required items not shown on the submittal.

2. APPROVED AS NOTED (NO RESUBMISSIONS REQUIRED) - Same as 1 above, except that minor corrections as noted shall be made by Contractor.

3. REVISE AND RESUBMIT - Rejected because of major inconsistencies or errors which shall be resolved or corrected by Contractor prior to subsequent review by Architect.

4. REJECTED - RESUBMIT - Submitted material does not conform to Plans and Specifications in major respect, that is, wrong size, model, capacity, or material.

M. It is considered reasonable that Contractor shall make a complete and acceptable submittal at least by second submission. The City of Morgan Hill reserves the right to deduct monies from payments due Contractor to cover additional costs of Architect's review beyond the second submission. Illegible submittals will be rejected and returned to Contractor for resubmission.

N. Favorable review will not constitute acceptance by the City of Morgan Hill or Architect of any responsibility for the accuracy, coordination and completeness of the submittals.

O. Accuracy, coordination, and completeness of Submittals shall be sole responsibility of Contractor, including responsibility to backcheck comments, corrections, and modifications from the City of Morgan Hill’s or Architect's review before fabrications. Submittals may be prepared by Contractor, subcontractors, or suppliers, but Contractor shall ascertain that submittals meet requirements of Contract Documents, while conforming to structural space and access conditions at point of installation. Architect's review will be only to determine if the items covered by the submittals will, after installation or incorporation in the Work, conform to the information given in the Contract Documents and be compatible with the design concept of the completed Project as a functioning whole as indicated by the Contract Documents. Favorable review of submittal, method of work, or information regarding materials and equipment Contractor proposes to furnish shall not relieve Contractor of responsibility for errors therein and shall not be regarded as assumption of risks or liability by Architect or the City of Morgan Hill, or any officer or employee thereof, and Contractor shall have no claim under Contract on account of failure or partial failure or inefficiency or insufficiency of any plan or method of work or material and equipment so accepted. Favorable review shall be considered to mean merely that Project Management or the City of Morgan Hill has no objection to Contractor using, upon his own full responsibility, plan or method of work proposed, or furnishing materials and equipment proposed.

P. Architect's review will not extend the means, methods, techniques, sequences or procedures of construction or to safety precautions or programs incident thereto. The review and approval of a separate item as such will not indicate approval of the assembly in which the item functions.

Q. Submit complete initial submittal for those items where required by individual specification Sections. Complete submittal shall contain sufficient data to demonstrate that items comply with Specifications, shall meet minimum requirements for submissions cited in technical specifications, shall include motor data and seismic anchorage certifications, where required, and shall include necessary revisions required for equipment other than first named. If Contractor submits incomplete initial submittal, when complete submittal is required, submittal may be returned to Contractor without review.

R. It shall be Contractor's responsibility to copy, conform and distribute reviewed submittals in sufficient numbers for Contractor's files, subcontractors and vendors.

S. After Architect review of submittal, revise and resubmit as required. Identify changes made since previous submittal.

1. Begin no fabrication or work which require submittals until return of submittals not requiring resubmittal.

2. Normally, submittals will be processed and returned to Contractor within [15] working days of receipt.

T. Distribute copies of reviewed submittals to concerned persons. Instruct recipients to promptly report any inability to comply with provisions.

1.4 SAFETY PLAN

A. Submit Safety Plan specific to this Contract to Architect within fifteen (15) calendar days after Start Date of the Contract Times.

B. Electronic copy of accepted Safety Plan will be returned to Contractor.

C. No on-site work shall be started until Safety Plan has been reviewed and accepted by Architect and/or Local Building Official. Acceptance of Safety Plan shall not affect Contractor's responsibility for maintaining a safe working place and instituting safety programs in connection with project.

1.5 PROGRESS SCHEDULE

A. See Section 013200, Construction Progress Documentation: Schedules and Reports, for schedule and report requirements.

B. Submit an electronic copy of schedule at each of the following times:

1. Original CPM (Critical Path Method) Schedule within thirty (30) days of the Notice to Proceed.

2. Adjustments to the CPM Schedule as required.

3. CPM Schedule updates monthly, five (5) days prior to monthly progress meeting.

C. Progress Schedules and Reports shall be submitted through Procore.

1.6 SHOP DRAWINGS

A. All Shop Drawings shall be submitted through Procore.

B. Minimum Sheet Size: 8-1/2 inches by 11 inches. All others: Multiples of 8-1/2 inches by 11 inches, 34 inches by 44 inches maximum.

C. Original electronic copy will be marked with Architect's review comments and returned to Contractor.

D. Mark each copy to identify applicable Products, models, options, and other data; supplement manufacturers' standard data to provide information unique to Work.

E. Include manufacturers' installation instructions when required by specification Section.

1.7 SAMPLES

A. Submit full range of manufacturers' standard colors, textures, and patterns for Architect's selection.

B. Submit samples to illustrate functional and aesthetic characteristics of Product, with integral parts and attachment devices. Coordinate submittal of different categories for interfacing work.

C. Include identification on each sample, giving full information.

D. Submit two (2) samples unless otherwise specified. One (1) will be retained.

E. Sizes: Unless otherwise specified, provide the following:

1. Paint Chips: Manufacturers' standard.

2. Flat or Sheet Products: Minimum 6 inches square, maximum 12 inches square.

3. Linear Products: Minimum 6 inches, maximum 12 inches long.

4. Bulk Products: Minimum 1 pint, maximum 1 gallon.

F. Full size samples may be used in Work upon approval.

G. Mock-ups:

1. Erect field samples and mock-ups at Project site in accordance with requirements of specification Sections.

2. Modify or make additional field samples and mock-ups as required to provide appearance and finishes approved by Architect.

3. Approved field samples and mock-ups may be used in Work upon approval.

1.8 QUALITY CONTROL SUBMITTALS

A. All Quality Control Documents shall be submitted through Procore.

B. Design Data: N/A.

C. Test Reports: Original electronic copy will be marked with Architect's review comments and returned to Contractor.

1. Indicate that material or product conforms to or exceeds specified requirements.

2. Reports may be from recent or previous tests on material or product, but must be acceptable to Architect. Comply with requirements of each individual specification Section.

D. Certificates: Original electronic copy will be marked with Architect's review comments and returned to Contractor.

1. Indicate that material or product conforms to or exceeds specified requirements.

2. Submit supporting reference data, affidavits, and certifications as appropriate.

3. Certificates may be recent or from previous test results on material or product, but must be acceptable to Architect.

E. Manufacturers' Instructions: Original electronic copy will be marked with Architect's review comments and returned to Contractor.

1. Include manufacturer's printed instructions for delivery, storage, assembly, installation, startup, adjusting, and finishing.

2. Identify conflicts between manufacturer's instructions and Contract Documents.

1.9 OPERATIONS AND MAINTENANCE MANUALS

A. Submit electronic copies of manufacturers' operations and maintenance manuals. If necessary, original electronic copy will be marked with Architect's review comments and returned to Contractor for correction until satisfactory information is provided. The City of Morgan Hill will retain satisfactorily corrected manuals for its own use.

B. Submit all Manuals through Procore.

C. Operations and maintenance manuals shall include the following as appropriate:

1. Operating instructions.

2. Preventive maintenance instructions.

3. Cleaning instructions.

4. Safety precautions.

5. Trouble shooting procedures.

6. Theory of operation to discrete component level.

7. Schematic diagrams, flow diagrams, wiring diagrams, logic diagrams, and so on, to discrete component level.

8. Parts lists showing all discrete components with part number, current prices and availability.

9. List of replaceable supplies; paper, ink, ribbon, etc. with part numbers, current prices and availability.

10. Recommended levels of spare parts and supplies to keep on hand.

11. Manufacturers' service and maintenance technical manuals.

12. Names, addresses and telephone numbers of service and repair firms for the equipment.

D. Manuals shall be the same as are used by manufacturers' authorized technicians to completely service and repair the equipment.

1.10 PROJECT RECORD DOCUMENTS

A. Submit one copy of each of the Project Record Documents listed in Section 017700 - Contract Closeout Procedures.

1.11 DELAY OF SUBMITTALS

A. Delay of submittals by Contractor is considered avoidable delay. Liquidated damages incurred because of late submittals will be assessed to Contractor.

2.0 PRODUCTS

A. Not applicable to this Section.

3.0 EXECUTION

A. Not applicable to this Section.

END OF SECTION

SECTION 015639 – TEMPORARY TREE AND PLANT PROTECTION

1.0 GENERAL

1.1 SUMMARY

A. This Section includes all labor, materials, equipment, operations, or methods listed, mentioned or scheduled on the Drawings and/or herein specified, including all incidentals necessary and required for completion of work under this Section.

B. Provide the following services:

1. Tree protection
2. Tree identification
3. Trimming tree limbs and branches
4. Root pruning
5. Raising fringe of trees
6. Grading around trees
7. Incidental extra work
8. Debris removal
9. Protective chain-link fence relocation or removal

1.2 RELATED SECTIONS

A. Documents affecting work of this Section include, but are not necessarily limited to, General Conditions, Special Conditions and Division 1 of these Contract Documents.

B. Division 31 - Earthwork

C. Division 32 - Exterior Improvements

1.3 QUALITY ASSURANCE

A. Standards of workmanship shall conform to those recommended by:

1. American National Standards Institute (ANSI), Section 133.1, "Tree Trimming and Removal."

2. International Society of Arboriculture (ISA)

3. National Arborist Association

1.3 PROJECT CONDITIONS

A. Visit Project site and determine conditions under which work will be performed.

B. Do not begin work until meeting with the City of Morgan Hill's Representative on the Project site to confirm tree locations and work to be performed.

C. Protection: Provide adequate protection of existing trees against damage from construction operations.

1. Install barricades for all trees, a 6 foot high chain-link fence. Locate fence at or beyond tree drip lines (outside edge of tree branching).

2. Especially protect roots, trunk, and foliage of existing trees.

3. Do not permit the following:

a. Using trees as support posts, power poles, sign posts, or anchorage for ropes, guy wires and power lines or other similar functions.

b. Poisoning items by disposing of paint, petroleum products, dirty water or other deleterious materials on or around trees.

c. Compaction of tree root area by moving trucks, grading, machines, storage of equipment, gravel, earthfill, supplies, etc.; within the tree drip line (outside edge of tree branching).

d. Damage to trunk or limbs caused by maneuvering vehicles or stacking material and equipment too close to them.

D. Compensation for planting loss: Any tree to remain that is damaged or destroyed due to the Contractor's negligence or failure to provide adequate protection shall be compensated for in accordance with the following schedule of values, using "tree-caliper" method (greatest trunk diameter measured 30-inches above ground):

1. For trees or shrubs with diameters up to and including 6 inches, actual cost of replacement with items similar in species, size and shape, including:

a. Actual cost of item boxed out of ground.

b. Transportation or delivery of boxed item to the Project site.

c. Planting and staking.

d. Maintenance in watering, fertilizing, pruning, pest control and other care to bring replacement to same general conditions as original item.

2. For trunks up to:

Size (in inches)	$ Amount
7	1,200.00
8	1,700.00
9	2,200.00
10	2,600.00
11	3,100.00
12	3,600.00
13	4,100.00
14	4,600.00
15	5,000.00
16	5,500.00
17	6,000.00
18 and over, add for each caliper inch:	600.

1.4 MATERIALS

A. Tree wound Dressing: Prior to any application, the City of Morgan Hill's Representative shall approve material and application.

B. Protective fencing: 6 foot high galvanized chain link. Refer to Section 323113, Chain Link Fences and Gates.

1.5 TREE IDENTIFICATION

A. Identification of trees to be removed or to remain, that have not been so marked on the drawings, is subject to the City of Morgan Hill's Representative approval.

B. No trees are to be removed without prior approval of the City of Morgan Hill's Representative.

1.6 TRIMMING TREES

A. No limbs are to be removed without prior approval of the City of Morgan Hill's Representative.

B. Notify the City of Morgan Hill's Representative when a tree limb is in conflict with the construction.

C. "Trim" shall be interpreted as follows:

1. Removal of dead branches 1/4 inch and over in diameter.

2. Removal of all dead and live stubs 1/4 inch and over in diameter.

3. Removal of all broken branches, all loose branches and other debris lodged in trees.

4. Removal of undesirable sucker growth.

5. Removal of all live branches which interfere with the tree's structural strength and healthful development. These include:

a. Limbs which rub and abrade a more important branch.

b. Limbs of weak structure which are not important to the frame work of the tree.

c. Limbs with twigs and foliage obstructing development of more important branches.

d. Limbs near the end of limbs which produce more weight than the limb is likely to support.

1.7 ROOT PRUNING

A. Avoid root cutting to prevent disruption of the trees water and nutrient carrying capacity and the natural stability based on balance of radial or sinker root system.

B. Notify the City of Morgan Hill's Representative if root cutting becomes necessary.

C. Avoid tearing or ripping tree roots due to excavation activities.

1. Where root cutting is necessary, no roots are to be cut without prior approval of the City of Morgan Hill's Representative.

2. Where root cutting becomes necessary, all roots are to be clean cut with a saw, lopping shears or proper tree pruning device. Under no circumstance are tree roots to be left splintered or the ends shredded.

1.8 REMOVING TREES

A. No trees are to be removed without prior approval of the City of Morgan Hill's Representative.

B. "Removing Trees" shall be interpreted as removing tree to the ground level and reducing the stump two (2) feet below grade, using a suitable mechanical stump chipper. In order to prevent damage to root systems of remaining adjacent trees, use of a tractor for reduction of stumpage will not be permitted. Trees which are to be removed are indicated on the drawings.

1.9 RAISING SOIL LEVEL

A. Soil placed on the surface around existing trees can create problems involving gaseous exchange in the root zone, crown rot and soil moisture. Soil aeration is a critical factor. Notify the City of Morgan Hill's Representative of any soil work under trees or adjacent to tree drip lines (outer edge of tree branching).

1.10 LOWERING SOIL LEVEL

A. Removing soil from under a tree canopy can seriously damage roots and may even impair the stability of the tree, Notify the City of Morgan Hill's Representative of any soil work under a tree.

1.11 DEBRIS REMOVAL

A. Dispose of all fallen debris present around trees subject to work under this Section. All wood and debris resulting from the Contractor's operations shall become the property of the Contractor and shall be disposed of by the Contractor off the City of Morgan Hill property.

1.12 TREE PROTECTIVE FENCING

A. Provide fencing as indicated on the drawings and as called out for in this Section.

B. Install protective fencing and plywood protection adjacent to tree areas and utilities installation areas prior to commencing work in these locations.

C. Relocation of protective fencing as a sequence of construction, requires no additional cost to the City of Morgan Hill.

END OF SECTION

SECTION 017400 - CONSTRUCTION CLEANING & WASTE MANAGEMENT

1.0 GENERAL

1.1 SUMMARY

A. This Section includes all labor, materials, equipment, operations, or methods listed, mentioned or scheduled on the plans and/or herein specified, including all incidentals necessary and required for completion of work under this Section.

B. This Section includes the following:

1. Waste Management Goals
2. Waste Management Plans
3. Waste Management Plan Implementation
4. Special Programs

1.2 RELATED SECTIONS

A. Documents affecting work of this Section include, but are not necessarily limited to, General Conditions, Special Conditions and Division 1 of these Contract Documents.

B. Section 011000 - Summary of Work

C. Section 013119 - Project Meetings

D. Section 013300 - Submittals

E. Section 017700 - Contract Closeout Procedures

1.3 REFERENCES

A. County Of Santa Clara Recycling and Waste Reduction Division

1.4 DEFINITIONS

A. Construction and Demolition Waste: Solid wastes such as building materials, packaging and rubble resulting from construction, remodeling, demolition and repair of buildings/facilities, paving and infrastructure.

B. Recyclable Materials: Products and materials that can be recovered and manufactured into new products. Recyclable materials include, but are not limited to, the following:

1. Asphaltic paving
2. Portland cement concrete
3. Brick and masonry
4. Land-clearing debris
5. Native rock and granular fill
6. Wood products
7. Ferrous materials
8. Non-Ferrous metals including copper and aluminum
9. Mechanical and electrical products and equipment
10. Gypsum products
11. Acoustical ceiling tile
12. Cardboard and plastic film
13. Office recycling, including paper, glass, plastic and cans
14. Carpet and padding
15. Oil used for equipment
16. Fluorescent lights and ballasts
17. Batteries

C. Recycling Facility: A business that specializes in collecting, handling, processing, distributing, or remanufacturing waste materials, generated by demolition and new construction projects, into products or materials that can be used for this project or by others.

1. Pacific Coast Recycling, Gilroy or as recommend by Santa Clara County

D. Trash: Product or material unable to be salvaged for resale, salvaged and reused, returned, or recycled.

E. Waste Materials: Product or material that can be salvaged for resale, salvaged and reused, returned to vendors, or recycled.

1.5 PERFORMANCE REQUIREMENT

A. The Contractor shall use all means available to divert at least 75% construction and demolition waste from landfills.

1.6 CONSTRUCTION WASTE MANAGEMENT OPERATIONS

A. Take a proactive, responsible role in management of construction waste and require all subcontractors, vendors and suppliers to participate in the effort. Establish a construction waste management program that includes the following categories:

1. Waste prevention including minimizing packaging waste

2. Salvage and reuse

3. Salvage for resale and donation

4. Recycling

5. Disposal

B. Encourage waste prevention practices as an efficient waste management strategy when sizing, cutting, and installing products and materials. Salvage and reuse is a better waste management method than recycling because little or no reprocessing is necessary; less pollution is created when items are reused in their original form. Therefore a diligent effort shall be made to salvage and reuse product and materials. Waste materials that cannot be salvaged and reused yet have value as recyclables, shall be recycled. Only trash shall be transported to a landfill.

1.7 CONSTRUCTION WASTE MANAGEMENT PLAN

A. Perform a waste analysis to determine the types and quantity of construction waste anticipated and identify salvage for resale, salvage and reuse, recycling, and disposal options available. Within 10 days after contract award and prior to performing any demolition work, submit a Waste Management Plan for review and approval. The Waste Management Plan shall include the following:

1. Waste Materials: A list of waste materials that will be salvaged for resale, salvaged and reused, and recycled. A list to address packaging materials including banding, crates, pallets, plastic film, polystyrene and cardboard (packaging waste consumes 15% of the waste stream).

2. Haulers: Name, address and phone number for each hauler providing service.

3. Facilities: Identification of each recycling facility to be utilized.

4. Separation and Protection: Description of the method to be employed in handling waste materials and description of the method that will be used to protect recycled materials from contamination.

5. Transportation: Description of the means of transportation of waste materials and the destination of the materials.

6. Subcontractor Participation: A description of requirements for subcontractors to adhere to that includes waste prevent measures such as salvage for resale or reuse and recycling for the waste materials generated by each subcontractor's scope of work, including packaging and shipping materials.

7. Meetings: A description of the regular meetings held in which waste management will be addressed. Refer to Section 013119, Project Meetings.

2.0 PRODUCTS

Not Used.

3.0 EXECUTION

3.1 PROGRAM IMPLEMENTATION AND MONITORING

A. Implement and maintain, for the duration of the project, the construction waste management program.

1. Manager: The Contractor shall designate an onsite party (or parties) responsible for instructing workers and overseeing and documenting results of the Waste Management Plan for the Project.

2. Distribution: The Contractor shall distribute copies of the Waste Management Plan to the Contractor, each Subcontractor, the City of Morgan Hill, and Architect.

3. Instruction: The Contractor shall provide onsite instruction of appropriate separating, handling, and recycling, salvage, reuse, and return methods to be used by all parties at the appropriate stages of the project.

4. Separation Facilities: The Contractor shall lay out and label a specific area to facilitate separation of materials for potential recycling, salvage, reuse, and return. Provide a site map that calls out areas identified. Provide the necessary containers and bins to facilitate the waste management program. Recycling and waste bin areas are to be kept neat and clean and clearly marked in order to avoid contamination of materials. Separate construction waste at the project site by one of the following methods:

   a. Source Separated Method: Waste products and materials that are recyclable are separated from trash and sorted into appropriately marked separate containers and then transported to the respective recycling facility for further processing. Trash is transported to a landfill.

   b. Co-Mingled Method: Selected waste materials are placed into a single container and then transported to a recycling facility where the recyclable materials are sorted and processed and the remaining trash and waste materials are handled separately.

   c. Other methods proposed by the Contractor and approved by the Contracting Officer.

END OF SECTION

SECTION 017700 - CONTRACT CLOSEOUT PROCEDURES

1.0 GENERAL

1.1 SUMMARY

A. This Section includes all labor, materials, equipment, operations, or methods listed, mentioned or scheduled on the plans and/or herein specified, including all incidentals necessary and required for completion of work under this Section.

B. This Section describes contract closeout procedures including:

1. Removal of temporary construction facilities.
2. Substantial completion.
3. Final completion.
4. Final cleaning.
5. Project record documents.
6. Material, equipment and finish data.
7. Project guarantee
8. Warranties
9. Turn-in.
10. Release of claims.
11. Guaranty and Maintenance Bonds

1.2 RELATED SECTIONS

A. Documents affecting work of this Section include, but are not necessarily limited to, General Conditions, Special Conditions and Division 1 of these Contract Documents.

1.3 REMOVAL OF TEMPORARY CONSTRUCTION FACILITIES

A. Remove temporary materials, equipment, services, and construction prior to Substantial Completion Inspection.

B. Clean and repair damage caused by installation or use of temporary facilities.

C. Restore permanent facilities used during construction to specified condition.

1.4 SUBSTANTIAL COMPLETION

A. When Contractor considers Work or designated portion thereof is substantially complete, submit written notice, with list of items to be completed or corrected.

B. Within reasonable time, Architect will inspect to determine status of completion.

C. Should Architect determine that Work is not substantially complete, Architect will promptly notify Contractor in writing, listing all defects and omissions.

D. Remedy deficiencies and send a second written notice of substantial completion. Architect will re-inspect the Work.

E. When Architect determines that Work is substantially complete, Architect will issue a Certificate of Substantial Completion.

F. Manufactured units, equipment and systems which require startup must have been started up and run for periods prescribed by Architect before a Certificate of Substantial Completion will be issued.

1.5 FINAL COMPLETION

A. When Contractor considers Work is complete, submit written certification that:

1. Contractor has inspected Work for compliance with Contract Documents.

2. Work, except for Contractor maintenance after Final Acceptance, has been completed in accordance with Contract Documents and deficiencies listed with Certificate of Substantial

3. Completion has been corrected.

4. Work is complete and ready for final inspection.

B. In addition to submittals required by conditions of Contract, provide submittals required by governing authorities and submit final statement of accounting giving total adjusted Contract Sum, previous payments, and sum remaining due.

C. When Architect finds Work is acceptable and final submittal is complete, Architect will issue final change order reflecting approved adjustments to Contract Sum not previously made by Change Order.

1.6 FINAL CLEANING

A. Execute final cleaning prior to final inspection.

B. Clean interior and exterior surfaces exposed to view; remove temporary labels, stains and foreign substances, polish transparent and glossy surfaces, vacuum carpeted and soft surfaces.

1. Clean equipment and fixtures to a sanitary condition, clean or replace filters of mechanical equipment operated during construction, clean ducts, blowers and coils of units operated without filters during construction.

2. Employ skilled workers for final cleaning.

C. Clean Site; mechanically sweep paved areas.

D. Remove waste and surplus materials, rubbish, and construction facilities from Site.

1.7 PROJECT GUARANTEE

A. Requirements for Contractor's guarantee of completed Work are included in Warranty from General Conditions of the Contract for Construction. Contractor shall guarantee Work done under Contract against failures, leaks or breaks or other unsatisfactory conditions due to defective equipment, materials or workmanship, and perform repair work or replacement required, at Contractor's sole expense, for period of [1] year from date of Final Acceptance.

B. Neither recordation of final acceptance nor final certificate for payment nor provision of the Contract nor partial or entire use or occupancy of premises by the City of Morgan Hill shall constitute acceptance of Work not done in accordance with Contract Documents nor relieve Contractor of liability in respect to express warranties or responsibility for faulty materials or workmanship.

C. The City of Morgan Hill may make repairs to defective Work as set forth in Warranty from General Conditions of the Contract for Construction, if, within 5 working days after mailing of written notice of defective work to Contractor or authorized agent, Contractor shall neglect to make or undertake with due diligence repairs; provided, however, that in case of leak or emergency where, in opinion of the City of Morgan Hill, delay would cause hazard to health or serious loss or damage, repairs may be made without notice being sent to Contractor, and Contractor shall pay cost thereof.

D. If, after installation, operation or use of materials or equipment to be furnished under Contract proves to be unsatisfactory to Architect, the City of Morgan Hill shall have right to operate and use materials or equipment until it can, without damage to the City of Morgan Hill, be taken out of service for correction or replacement. Period of use of defective materials or equipment pending correction

or replacement shall in no way decrease guarantee period required for acceptable corrected or replaced items of materials or equipment.

E. Nothing in this Section shall be construed to limit, relieve or release Contractor's, subcontractors' and equipment suppliers' liability to the City of Morgan Hill for damages sustained as result of latent defects in equipment caused by negligence of suppliers' agents, employees or subcontractors. Stated in another manner, warranty contained in the Contract Documents shall not amount to, nor shall it be deemed to be, waiver by the City of Morgan Hill of any rights or remedies (or time limits in which to enforce such rights or remedies) it may have for defective workmanship or defective materials under laws of this State pertaining to acts of negligence.

1.8 WARRANTIES AND BONDS

A. Execute Contractor's submittals and assemble documents executed by subcontractors, suppliers, and manufacturers.

1. Provide table of contents and assemble in a single electronic file.

2. Assemble in Specification Section order.

3. Submit through Procore.

B. Submit material prior to final application for payment.

1. For equipment put into use with the City of Morgan Hill’s permission during construction, submit within ten (10) working days after first operation.

2. For items of Work delayed materially beyond Date of Substantial Completion, provide updated submittal within ten (10) working days after acceptance, listing date of acceptance as start of warranty period.

C. Warranties are intended to protect the City of Morgan Hill against failure of work and against deficient, defective and faulty materials and workmanship, regardless of sources.

D. Limitations: Warranties are not intended to cover failures which result from the following:

1. Unusual or abnormal phenomena of the elements.

2. Vandalism after substantial completion.

3. Insurrection or acts of aggression including war.

E. Related Damages and Losses: Remove and replace Work which is damaged as result of defective Work, or which must be removed and replaced to provide access for correction of warranted Work.

F. Warranty Reinstatement: After correction of warranted Work, reinstate warranty for corrected Work to date of original warranty expiration or to a date not less than 365 days after corrected Work was done, whichever is later.

G. Replacement Cost: Replace or restore failing warranted items without regard to anticipated useful service lives.

H. Warranty Forms: Submit drafts to Architect for approval prior to execution. Forms shall not detract from or confuse requirements or interpretations of Contract Documents.

1. Warranty shall be countersigned by manufacturers.

2. Where specified, warranty shall be countersigned by subcontractors and installers.

I. Rejection of Warranties: the City of Morgan Hill reserves right to reject unsolicited and coincidental product warranties which detract from or confuse requirements or interpretations of Contract Documents.

J. Term of Warranties: For materials, equipment, systems and workmanship warranty period shall be two (2) years minimum from date of substantial completion of entire Work except where:

1. Detailed specifications for certain materials, equipment or systems require longer warranty periods.

2. Materials, equipment or systems are put into beneficial use the City of Morgan Hill prior to Substantial Completion as agreed to in writing by Architect.

K. Warranty of Title: No material, supplies, or equipment for Work under Contract shall be purchased subject to any chattel mortgage, security agreement, or under a conditional sale or other agreement by which an interest therein or any part thereof is retained by seller or supplier. Contractor warrants good title to all material, supplies, and equipment installed or incorporated in Work and agrees upon completion of all work to deliver premises, together with improvements and appurtenances constructed or placed thereon by Contractor, to the City of Morgan Hill free from any claim, liens, security interest, or charges, and further agrees that neither Contractor nor any person, firm, or corporation furnishing any materials or labor for any Work covered by Contract shall have right to lien upon premises or improvement or appurtenances thereon. Nothing contained in this

Paragraph, however, shall defeat or impair right of persons furnishing materials or labor under bond given by Contractor for their protection or any rights under law permitting persons to look to funds due Contractor in hands of the City of Morgan Hill.

1.9 TURN-IN

A. Contract will not be closed out and final payment will not be made until all personnel Identification Media, vehicle permits and keys issued to Contractor during prosecution of Work are turned in to City of Morgan Hill.

2.0 PRODUCTS

A. Not applicable to this Section.

3.0 EXECUTION

A. Not applicable to this Section.

END OF SECTION

SECTION 018119 – CONSTRUCTION INDOOR AIR QUALITY MANAGEMENT

1.0 GENERAL

1.1 SUMMARY

A. This Section includes all labor, materials, equipment, operations, or methods listed, mentioned or scheduled on the plans and/or herein specified, including all incidentals necessary and required for completion of work under this Section.

B. This Section includes procedures for achieving an environmentally conscious Work Product. The Contractor shall:

1. Prepare a Construction Indoor Air Quality Management Plan (IAQ) in accordance with this Section (refer to parts 1.2 and 1.3 below).

2. Adhere to the methods and procedures outlined in the Construction IAQ during construction and closeout.

3. Document compliance with the Construction IAQ during construction.

4. Submit certification to the County at closeout demonstrating compliance with the Construction IAQ requirements.

1.2 RELATED SECTIONS

A. Documents affecting work of this Section include, but are not necessarily limited to, General Conditions, Special Conditions and Division 1 of these Contract Documents.

1.3 SPECIAL SUBMITTAL REQUIREMENTS

A. Construction Indoor Air Quality Management Plan (IAQ): Not less than 21 days prior to installation of HVAC ductwork or equipment, or application of coatings, sealants and/or finishes inside the enclosed building shell.

B. Revise and resubmit IAQ as required by the City of Morgan Hill or Architect.

1. Approval of the Contractor’s Environmental Procedures Compliance plans will not relieve the Contractor of responsibility for adequate and continuing control of pollutants and other environmental protection measures required by Federal, state, county or local agencies.

1.4 PROVIDE A CONSTRUCTION IAQ MANAGEMENT PLAN THAT INCLUDES:

A. Procedures for meeting the applicable SMACNA (Sheet Metal and Air Conditioning National Design/Builders Association) Construction IAQ requirements.

B. Procedures for protection and remediation plans for damaged absorptive materials.

C. Training sessions for all contractors and subcontractors that they understand and agree to comply with the Construction IAQ Management Plan requirements.

1. Schedule and sequence of events for HVAC system installation/startup, application of interior coatings and finishes, and installation of building furnishings.

2.0 PRODUCTS

A. Not Applicable to this Section.

3.0 EXECUTION

3.1 DURING CONSTRUCTION THE CONTRACTOR SHALL:

A. Meet or exceed the applicable minimum requirements of the current SMACNA and the IAQ Guidelines for Occupied Buildings Under Construction, Chapter 3, for the items listed below which the contractor shall supply during construction:

1. HVAC Protection:

a. Protect all air handling and distribution equipment, and air supply and return ducting during construction.

b. Adequately cover and protect all exposed air inlet and outlet openings, grilles, ducts, plenums, etc., to prevent water, moisture, dust, and other contaminant intrusion.

c. Apply protection immediately after installation of equipment and ducting.

d. Ducting runs that require more than a single day to install shall be protected at the end of each day’s Work.

2. Source Control:

a. Protect stored onsite or installed absorptive or porous materials including, but not limited to, batt insulation, drywall, and carpeting from exposure to moisture.

b. Do not use moisture-damaged porous materials in the building.

c. Provide adequate ventilation of packaged dry products prior to installation to allow for gassing of volatile organic compounds (VOCs). Remove from packaging and ventilate in a a secure, dry, well-ventilated space free from strong contaminant sources and residues. Provide a temperature range of 60 degrees F minimum to 90 degrees F maximum continuously during the ventilation period. Do not ventilate within limits of Work unless otherwise approved by the Architect.

3. Housekeeping:

a. Minimize accumulation of dust fumes, vapors, or gases in the building.

b. Suppress dust with wetting agents or a sweeping compound.

c. Clean up dust using a wet rag or damp mop.

d. Increase the cleaning frequency when dust buildup is noted.

e. Remove spills or excess applications of solvent-containing products as soon as possible.

f. Remove accumulated water and keep work areas as dry as possible.

g. Vacuum using HEPA-filtered vacuum cleaners.

h. Store volatile liquids, including fuels and solvents, in closed containers and outside of the building when not in use.

i. Keep volatile liquid containers closed when the container is inside of the building and not in use.

4. Scheduling:

a. Develop schedule for application of interior finishes including time frames for the application of wet materials onto dry materials, dry materials onto wet materials, and expected curing times for applied wet materials.

b. Schedule application of wet material floor coverings, wall coverings, and other porous finish materials after activation of building HVAC and exhaust systems.

c. Wet materials include all paints, adhesives, sealants, coatings, finishes and spray-applied materials.

d. Insure that all wet applied interior finish materials are properly and fully cured before installing other finish materials over them.

e. Install carpets and furnishings after all other interior finish materials have been applied and fully cured.

f. Provide sufficient ventilation, air circulation and air changes to properly cure materials. Run HVAC system and exhaust fans 24 hours per day during this period. Return air dampers shall be closed to provide 100% fresh air intake. Temperatures shall be maintained at approximately 75 degrees F (verify specific recommended temperature settings with coating and finish manufacturer's product data).

g. Provide sufficient ventilation, air circulation and air changes to dissipate excess humidity when present. Relative humidity shall not be allowed to exceed 40%.

B. Use nontoxic cleaning materials and procedures to avoid the release of toxic fumes and VOCs into finished spaces within the building.

C. Replace all filtration media immediately prior to occupancy.

1. Filtration media shall have a Minimum Efficiency Reporting Valve (MERV) of 13, as determined by ASHRAE 52.2-2007 for media installed at the end of construction.

2. Provide cut sheets of filtration media used during construction and installed prior to occupancy with MERV highlighted.

3. Provide a letter declaring that all filtration media was replaced prior to occupancy.

D. During construction provide photographs of Construction IAQ management measures such as protection of ducts and onsite stored or installed absorptive materials to document compliance with the Construction IAQ management plan.

END OF SECTION

Division 2:
Existing Conditions

SECTION 024113 – SELECTIVE SITE DEMOLITION

1.0 GENERAL

1.1 SUMMARY

A. This Section includes all labor, materials, equipment, operations, or methods listed, mentioned or scheduled on plans and/or herein specified, including all incidentals necessary and required for completion of work under this Section.

B. Provide demolition and removal of minor structures, existing paving, existing concrete walkways, stairs and curbs, below-grade piping, conduit and utilities as shown on project Drawings and as specified herein.

1.2 RELATED SECTIONS

A. Documents affecting work of this Section include, but are not necessarily limited to, General Conditions, Special Conditions and Division 1 of these Contract Documents.

1.3 DEFINITIONS

A. Remove: Remove and legally dispose of items except those indicated to be reinstalled, salvaged, or to remain the Owner's property.

B. Remove and Reinstall: Remove items indicated; clean, service, and otherwise prepare them for reuse; store and protect against damage. Reinstall items in the same locations or in locations indicated.

C. Existing to Remain: Protect construction indicated to remain against damage and soiling during selective demolition. When permitted by the Architect, items may be removed to a suitable, protected storage location during selective demolition and then cleaned and reinstalled in their original locations.

1.4 MATERIAL OWNERSHIP

A. Except for items or materials indicated to be reused, reinstalled, claimed by the Owner or otherwise indicated to remain the Owner's property, demolished materials shall become the Contractor's property and shall be removed from the site with further disposition at the Contractor's option.

1.5 SUBMITTALS

A. Submit proposed dust-control measures.

B. Schedule of selective demolition activities indicating the following:

1. Detailed sequence of selective demolition and removal work, with starting and ending dates for each activity.

2. Interruption of utility services.

3. Coordination for shutoff, capping and continuation of utility services.

C. Miscellaneous Submittals

1. Coordination of the Owner's partial occupancy of completed Work.

2. Detailed sequence of selective demolition and removal work to ensure uninterrupted progress of the Owner's on-site operations.

3. Locations of temporary partitions and means of egress.

D. Contract Closeout Submittal

1. Project Record Documents: Identify and accurately locate capped utilities and other subsurface structural, electrical or mechanical conditions.

1.6 QUALITY ASSURANCE

A. Qualifications

1. Demolition Firm: Engage an experienced firm that has successfully completed selective demolition Work similar to that indicated for this Project.

B. Regulatory Requirements: Comply with governing EPA notification regulations before starting selective demolition. Comply with hauling and disposal regulation of authorities having jurisdiction.

1.7 PROJECT CONDITIONS

A. The Owner assumes no responsibility for actual condition of site to be selectively demolished.

1. Conditions existing at time of inspection for bidding purpose will be maintained by the Owner as far as practical.

B. Asbestos: It is not expected that asbestos will be encountered in the Work. If any materials suspected of containing asbestos are encountered, do not disturb the materials. Immediately notify the Architect.

C. Storage or sale of removed items or materials on-site will not be permitted.

1.8 SEQUENCING AND SCHEDULING

A. Arrange selective demolition schedule so as not to interfere with the Owner's on-site operations.

2.0 PRODUCTS

3.0 EXECUTION

3.1 EXAMINATION

A. Verify that utilities have been disconnected and capped.

B. Survey existing conditions and correlate with requirements indicated to determine extent of selective demolition required.

C. Inventory and record the condition of items to be removed and reinstalled.

D. When unanticipated mechanical, electrical or structural elements that conflict with the intended function or design are encountered, investigate and measure the nature and extent of the conflict. Promptly submit a written report to the Architect.

E. Perform surveys as the Work progresses to detect hazards resulting from selective demolition activities.

3.2 UTILITY SERVICES

A. Maintain existing utilities indicated to remain in service and protect them against damage during selective demolition operations.

1. Do not interrupt existing utilities serving occupied or operating facilities, except when authorized in writing by the Owner and authorities having

2. jurisdiction. Provide temporary services during interruptions to existing utilities, as acceptable to the Owner and to governing authorities,

a. Provide not less than 72 hours' notice to Owner if shutdown of service is required during changeover.

B. Utility Requirements: Locate, identify, disconnect and seal or cap off indicated utility services serving building to be selectively demolished.

3.3 PREPARATION

A. Drain, purge, or otherwise remove, collect, and dispose of chemicals, gases, explosives, acids, flammables, or other dangerous materials before proceeding with selective demolition operations.

B. Conduct demolition operations and remove debris to ensure minimum interference with roads, streets, walks, and other adjacent occupied and used facilities.

1. Do not close or obstruct streets, walks, or other adjacent occupied or used facilities without permission from the Owner and authorities having jurisdiction. Provide alternate routes around closed or obstructed traffic ways if required by governing regulations.

C. Conduct demolition operations to prevent injury to people and damage to adjacent buildings and facilities to remain. Ensure safe passage of people around selective demolition area.

1. Erect temporary protection, such as walks, fences, railings, canopies, and covered passageways, where required by authorities having jurisdiction.

2. Protect existing site improvements, appurtenances, and landscaping to remain.

3.4 POLLUTION CONTROLS

A. Use water mist, temporary enclosures, and other suitable methods to limit the spread of dust and dirt. Comply with governing environmental protection regulations.

1. Do not use water when ft may damage existing construction or create hazardous or objectionable conditions, such as flooding and pollution.

B. Remove and transport debris in a manner that will prevent spillage on adjacent surfaces and areas.

C. Clean adjacent areas and improvements of dust, dirt, and debris caused by selective demolition operations. Return adjacent areas to condition existing before start of selective demolition.

3.5 SELECTIVE DEMOLITION

A. Demolish and remove existing construction only to the extent required by new construction and as indicated. Use methods required to complete Work within limitations of governing regulations and as follows:

1. Proceed with selective demolition systematically, from higher to lower level.

2. Neatly cut openings and holes plumb, square, and true to dimensions required. Use cutting methods least likely to damage construction to remain or adjoining construction. To minimize disturbance of adjacent surfaces, use hand or small power tools designed for sawing or grinding, not hammering and chopping. Temporarily cover openings to remain.

3. Remove decayed, vermin-infested, or otherwise dangerous or unsuitable materials and promptly dispose of off-site.

4. Dispose of demolished items and materials promptly.

C. Demolish concrete in small sections. Cut concrete at junctures with construction to remain, using power-driven masonry saw or hand tools; do not use power-driven impact tools.

3.6 PATCHING AND REPAIRS

A. Promptly patch and repair holes and damaged surfaces caused to adjacent construction by selective demolition operations.

B. Where repairs to existing surfaces are required, patch to produce surfaces suitable for new materials.

C. Restore exposed finishes of patched areas and extend finish restoration into adjoining construction to remain in a manner that eliminates evidence of patching and refinishing.

3.7 DISPOSAL OF DEMOLISHED MATERIALS

A. General: Promptly dispose of demolished materials. Do not allow demolished materials to accumulate on-site.

B. Burning: Do not bum demolished materials.

C. Disposal: Transport demolished materials off the Owner’s property and legally dispose of them.

3.8 CLEAN UP

A. Sweep the affected areas broom clean on completion of selective demolition operation.

END OF SECTION

SECTION 024119 - SELECTIVE STRUCTURE DEMOLITION

1.0 GENERAL

1.1 SUMMARY

A. This Section includes all labor, materials, equipment, operations, or methods listed, mentioned or scheduled on the plans and/or herein specified, including all incidentals necessary and required for completion of work under this Section.

B. Related Documents:

1. The following applies to this section:

a. General provisions of the Contract, including General and Supplementary Conditions.

b. The Drawings.

c. Division 01 Specification Sections and related requirements in other sections of the Project Manual.

d. Related requirements in other Contract Documents listed in the Agreement.

2. Review these documents for coordination with additional requirements and information that apply to work under this Section.

C. Section Includes:

1. Demolition and removal of selected portions of building.

1.2 RELATED SECTIONS

A. Documents affecting work of this Section include, but are not necessarily limited to, General Conditions, Special Conditions and Division 1 of these Contract Documents.

B. Section 011000 - Summary of Work, for use of premises, and phasing, and Owner-occupancy requirements.

C. Section 017400 - Construction Cleaning and Waste Management, for disposal of demolished materials.

1.3 DEFINITIONS

A. Remove:

1. Detach items from existing construction and legally dispose of them off-site, unless indicated to be removed and salvaged or removed and reinstalled.

B. Remove and Salvage:

1. Detach items from existing construction and deliver them to Owner ready for reuse.

C. Remove and Reinstall:

1. Detach items from existing construction, prepare them for reuse, and reinstall them where indicated.

D. Existing to Remain:

1. Existing items of construction that are not to be removed and that are not otherwise indicated to be removed, removed and salvaged, or removed and reinstalled.

1.4 SUBMITTALS

A. Qualification Data:

1. For demolition firm.

B. Schedule of Selective Demolition Activities:

1. Indicate the following:

a. Detailed sequence of selective demolition and removal work, with starting and ending dates for each activity.

b. Interruption of utility services. Indicate how long utility services will be interrupted.

c. Coordination for shutoff, capping, and continuation of utility services.

C. Inventory:

1. After selective demolition is complete, submit a list of items that have been removed and salvaged, if any.

D. Landfill Records:

1. Comply with submittal requirements in Division 01 Section "Demolition Waste Management and Disposal."

1.5 QUALITY ASSURANCE

A. Demolition Firm Qualifications:

1. An experienced firm that has specialized in demolition work similar in material and extent to that indicated for this Project.

B. Refrigerant Recovery Technician Qualifications:

1. Certified by an EPA-Approved Certification Program.

C. Regulatory Requirements:

1. Comply with governing EPA notification regulations before beginning selective demolition. Comply with hauling and disposal regulations of authorities having jurisdiction.

2. Coordinate with the City's Environmental Consultant regarding regulatory requirements for handling and disposal of hazardous waste.

D. Standards:

1. Comply with ANSI A10.6, NFPA 241 and CBC/CFC chapter 33.

E. Pre-demolition Conference:

1. Conduct conference at Project site to comply with requirements in Division 01 Section "Project Management and Coordination." Review methods and procedures related to selective demolition including, but not limited to, the following:

a. Inspect and discuss condition of construction to be selectively demolished.

b. Review structural load limitations of existing structure.

c. Review and finalize selective demolition schedule and verify availability of materials, demolition personnel, equipment, and facilities needed to make progress and avoid delays.

d. Review requirements of work performed by other trades that rely on substrates exposed by selective demolition operations.

e. Review areas where existing construction is to remain and requires protection.

1.6 PROJECT CONDITIONS

A. General:

1. Comply with requirements specified in Division 01 Section "Summary."

2. Conditions existing at time of inspection for bidding purpose will be maintained by Owner as far as practical.

3. Take adequate measures to reduce noise, duct and debris production. Refer to city ordinance.

4. Notify Architect of discrepancies between existing conditions and Drawings before proceeding with selective demolition.

B. Remove Items Handling:

1. Storage or sale of removed items or materials on-site is not permitted.

C. Utility Service:

1. Coordinate shut-down of utilities with Owner's Representative.

1.7 WARRANTY

A. Existing Warranties:

1. Remove, replace, patch, and repair materials and surfaces cut or damaged during selective demolition, by methods and with materials so as not to void existing warranties, if any.

2.0 PRODUCTS – NOT USED

3.0 EXECUTION

3.1 EXAMINATION

A. General:

1. Verify that utilities have been disconnected and capped.

2. Survey existing conditions and correlate with requirements indicated to determine extent of selective demolition required.
3. Inventory and record the condition of items to be removed and reinstalled and items to be removed and salvaged.

4. When unanticipated mechanical, electrical, or structural elements that conflict with intended function or design are encountered, investigate and measure the nature and extent of conflict. Promptly submit a written report to Architect.

3.2 UTILITY SERVICES AND MECHANICAL/ELECTRICAL SYSTEMS

A. See Division 02 Section "Selective Demolition of Utility Services."

3.3 PREPARATION

A. Site Access and Temporary Controls:

1. Conduct selective demolition and debris-removal operations to ensure minimum interference with roads, streets, walks, walkways, and other adjacent occupied and used facilities.

2. Comply with requirements for access and protection specified in Division 01 Section "Temporary Facilities and Controls."

B. Temporary Facilities:

1. Provide temporary barricades and other protection required to prevent injury to people and damage to adjacent buildings and facilities to remain.

2. Provide protection to ensure safe passage of people around selective demolition area.

3. Provide temporary weather protection, during interval between selective demolition of existing construction on exterior surfaces and new construction, to prevent water leakage and damage to structure and interior areas.

4. Protect walls, ceilings, floors, and other existing finish work that are to remain or that are exposed during selective demolition operations.

5. Cover and protect furniture, furnishings, and equipment that have not been removed.

6. Comply with requirements for temporary enclosures, dust control, heating, and cooling specified in Division 01 Section "Temporary Facilities and Controls."

C. Temporary Shoring:

1. Provide and maintain shoring, bracing, and structural supports as required to preserve stability and prevent movement, settlement, or collapse of construction and finishes to remain, and to prevent unexpected or uncontrolled movement or collapse of construction being demolished.

2. Strengthen or add new supports when required during progress of selective demolition.

3.4 SELECTIVE DEMOLITION, GENERAL

A. General:

1. Demolish and remove existing construction only to the extent required by new construction and as indicated. Use methods required to complete the Work within limitations of governing regulations and as follows:

a. Proceed with selective demolition systematically, from higher to lower level. Complete selective demolition operations above each floor or tier before disturbing supporting members on the next lower level.

b. Neatly cut openings and holes plumb, square, and true to dimensions required. Use cutting methods least likely to damage construction to remain or adjoining construction. Use hand tools or small power tools designed for sawing or grinding, not hammering and chopping, to minimize disturbance of adjacent surfaces. Temporarily cover openings to remain.

c. Cut or drill from the exposed or finished side into concealed surfaces to avoid marring existing finished surfaces.

d. Do not use cutting torches until work area is cleared of flammable materials. At concealed spaces, such as duct and pipe interiors, verify condition and contents of hidden space before starting flame-cutting operations. Maintain fire watch and portable fire-suppression devices during flame-cutting operations.

e. Maintain adequate ventilation when using cutting torches.

f. Remove decayed, vermin-infested, or otherwise dangerous or unsuitable materials and promptly dispose of off-site.

g. Remove structural framing members and lower to ground by method suitable to avoid free fall and to prevent ground impact or dust generation.

h. Locate selective demolition equipment and remove debris and materials so as not to impose excessive loads on supporting walls, floors, or framing.

i. Dispose of demolished items and materials promptly. Comply with requirements in Division 01 Section "Construction Cleaning and Waste Management."

B. Removed and Salvaged Items:

1. When Items are indicated on the Drawings to be removed and salvaged, proceed as follows:

a. Clean salvaged items.

b. Pack or crate items after cleaning. Identify contents of containers.

c. Store items in a secure area until delivery to Owner.

d. Transport items to Owner's storage area designated by Owner.

e. Protect items from damage during transport and storage.

C. Removed and Reinstalled Items:

1. Clean and repair items to functional condition adequate for intended reuse. Paint equipment to match new equipment.

2. Pack or crate items after cleaning and repairing. Identify contents of containers.

3. Protect items from damage during transport and storage.

4. Reinstall items in locations indicated. Comply with installation requirements for new materials and equipment. Provide connections, supports, and miscellaneous materials necessary to make item functional for use indicated.

D. Existing Items to Remain:

1. Protect construction indicated to remain against damage and soiling during selective demolition. When permitted by Architect, items may be removed to a suitable, protected storage location during selective demolition and cleaned and reinstalled in their original locations after selective demolition operations are complete.

3.5 SELECTIVE DEMOLITION PROCEDURES FOR SPECIFIC MATERIALS

A. Concrete:

1. Demolish in sections. Cut concrete full depth at junctures with construction to remain and at regular intervals, using power-driven saw, then remove concrete between saw cuts.

B. Concrete Slabs-on-Grade:

1. Saw-cut perimeter of area to be demolished, then break up and remove.

C. Resilient Floor Coverings:

1. Remove floor coverings and adhesive.

a. Remove residual adhesive and prepare substrate for new floor coverings by one of the methods recommended by the Abatement Work Plan.

b. Remove identified hazardous floorcovering materials in accordance with Standard Procedures identified in the Abatement Work Plan.

D. Air-Conditioning Equipment:

1. Remove equipment without releasing refrigerants.

2. For additional requirements, see Division 02 Section "Selective Demolition of Utility Services."

E. Hazardous Materials:

1. Contractor to coordinate with District to ensure that all abatement work has been completed prior to beginning of Project.

2. It is the responsibility of the Contractor to walk through the Project and contact the Abatement Contractor to confirm that all necessary abatement

has occurred and the Project is ready for the next phase of work.

3.6 DISPOSAL OF DEMOLISHED MATERIALS

A. General:

1. Except for items or materials indicated to be recycled, reused, salvaged, reinstalled, or otherwise indicated to remain Owner's property, remove demolished materials from Project site and legally dispose of them in an EPA-approved landfill.

2. Do not allow demolished materials to accumulate on-site.

3. Remove and transport debris in a manner that will prevent spillage on adjacent surfaces and areas.

a. Comply with requirements specified in Division 01 Section "Demolition Waste Management and Disposal."

B. Burning:

1. Do not burn demolished materials.

C. Disposal:

1. Transport demolished materials off Owner's property and legally dispose of them.

3.7 CLEAN UP

A. General:

1. Clean adjacent structures and improvements of dust, dirt, and debris caused by selective demolition operations. Return adjacent areas to condition existing before selective demolition operations began.

3.8 SELECTIVE DEMOLITION SCHEDULE

A. Refer to Drawings.

END OF SECTION

Division 3:
Concrete

SECTION 03 00 00: CONCRETE WORK

PART 1 - GENERAL

1.01 APPLICABLE SECTIONS

A. The requirements/provisions of the General Conditions and Special Information shall apply to this section.

1.02 SCOPE

A. The work included under this section consists of furnishing all material, supplies, equipment, tools, transportation, and facilities, and performing all labor and services necessary for, required in connection with or properly incidental to furnishing, and installing concrete work as described in this section of the specifications, shown on the accompanying drawings, or reasonably implied therefrom, except as hereinafter specifically excluded.

B. Work Included:

1. All formwork, including any special forms necessary to produce architectural details and/or to accommodate the work of others and removal of forms.

2. All concrete reinforcement, placement, bending and forming thereof.

3. All concrete and cement finishing; all surface treatment and curing, including non-slip finishes and color work.

4. Installation of all reglets, bolts, anchors, cans, sleeves, column anchor bolts, epoxy dowels, etc., whether furnished under this section or by others (except cans and sleeves required under the Electrical and Mechanical Divisions).

5. The furnishing of all items required to be or shown on the drawings as embedded in concrete, which are not specifically required under other sections.

6. Setting headers and screeds. Curing and protecting concrete.

7. Grouting of column bases.

8. Inserts, sleeves, cans, etc., required under the Electrical and Mechanical Divisions.

9. Routing out cracks and saw cutting control joints as required by waterproofing.

10. Sandblasting and application of epoxy bonding agents.

PART 2 - PRODUCTS

A. See other sections of this division.

PART 3 - EXECUTION

3.01 DEFECTIVE WORK

A. General: Work considered to be defective may be ordered by the Engineer to be replaced in which case the Contractor shall remove the defective work at his expense. Work considered to be defective shall include, but not be limited to, the following:

B. Reinforcing: Kinks and bends therein which are not scheduled or indicated on the drawings; reinforcing improperly placed, or previously heated, or excessively cold worked reinforcing.

C. Concrete:

1. Concrete in which defective or inadequate reinforcing steel has been placed.

2. Concrete incorrectly formed, or not conforming to details and dimensions on the drawings or with the intent of these documents, or concrete the surfaces of which are out of plumb or level.

3. Concrete below specified strength.

4. Concrete not meeting the maximum allowable drying shrinkage requirements.

5. Concrete containing wood, cloth, or other foreign matter, rock pockets, voids, honeycombs, cracks or cold joints not scheduled or indicated on the drawings.

3.02 CORRECTION OF DEFECTIVE WORK

A. The Contractor shall, at his expense, make all such corrections and alleviation measures as directed by the Engineer.

B. Concrete work containing rock pockets, voids, honeycombs, cracks or cold joints not scheduled or indicated on the drawings, shall be chipped out until all unconsolidated material is removed.

C. Secure approval of chipped-out areas before patching. Patch per ACI 301-95.

END OF SECTION

SECTION 03 10 00: CONCRETE FORMWORK

PART 1 - GENERAL

1.01 WORK INCLUDED

A. Wood formwork for cast-in-place concrete, complete with shoring, bracing and anchorage.

B. Coordinate and install items supplied by other sections of work.

1.02 RELATED WORK

A. Section 05120: Metal fabrications to be embedded in concrete.

1.03 QUALITY ASSURANCE

A. Construct and erect concrete formwork in accordance with ACI 318, ACI 347 and applicable construction safety regulations for place of work.

1.04 REFERENCE STANDARDS

A. Standard Specifications: The American Concrete Institute (ACI) "Specifications for Structural Concrete for Buildings" ACI 301-95 shall be used as a standard specification. All formwork shall conform with the standard specification except as modified by the requirements specified herein and/or the details on the drawings.

B. Codes: The current edition of the California Building Code, Chapter 19, "Concrete". All formwork shall meet the requirements of this code. This code supplements the standard specification and shall supersede the standard specification in cases where provisions are in conflict.

C. ACI 318-Building Code Requirements for Reinforced Concrete.

D. ACI 347-Recommended Practice for Concrete Formwork.

1.05 SUBMITTALS

A. General Requirements:

1. Submittals shall be made to Architect/Engineer in accordance with the requirements of Section 01 30 00, "Shop Drawings, Product Date and Samples" of these specifications.

2. Construction of elevated slab formwork shall not begin until Contractor has received submittals reviewed by Architect/Engineer governing all aspects of the intended work.

B. Shop Drawings:

1. Shop drawings for elevated slab and beam formwork submitted for review shall include shoring, bracing, reshoring (where required), stringer, joist and beam layout, details of installation and method of installing and maintaining reshores tight against concrete surfaces. In addition to the above drawings, calculations for stresses and deflections shoring and framing caused by dead, live and construction loads shall be submitted to the Engineer for review. Drawings and calculations shall be signed by a registered civil engineer of the State of California.

C. Product Data: Manufacturer's catalog sheets including instructions for use and description of application shall be provided on each of the following materials:

1. Shoring system
2. Reshoring system

PART 2 - PRODUCTS

2.01 WOOD FORM MATERIALS

A. Plywood: U.S. Product Standard PS 1-74 grade B-B Plyform Class I or II, 5/8 inch minimum thickness or equal as approved by the Architect/Engineer.

B. Douglas Fir (DF): Standard Grading and Dressing Rules #16, West Coast Lumber Inspection Bureau, as amended to date. Pressure treated material shall bear the stamp of treated process and plant where treatment was conducted. Grade stamp shall be clearly visible.

C. Redwood (RW): Standard specification for grades of California redwood lumber; Redwood Inspection Service, latest edition.

D. Nails, Spikes, Lag Bolts, Through Bolts, Anchorages: Sized as required; of sufficient strength and character to maintain formwork in place while pouring concrete.

E. High Density Overlay (HDO) concrete form: For use at exposed architectural concrete. Forms to be plastic coated, smooth faced, with sharp edges for flush butt joints between forms.

2.02 FORMWORK ACCESSORIES

A. Form Release Agent: Colorless non-toxic mineral oil which will not stain concrete or impair natural bonding or color characteristics of coating intended for use on concrete.

B. Fillets for Chamfered corners: wood type; size as shown on plans with maximum possible lengths.

PART 3 - EXECUTION

3.01 GENERAL

A. Verify lines, levels and centers before proceeding with formwork. Ensure that dimensions agree with drawings.

B. Construct formwork, shoring and bracing to meet design and code requirements, so that resultant finished concrete conforms to required shapes, lines and dimensions.

C. Arrange and assemble formwork to permit dismantling and stripping, so that concrete is not damaged during removal.

D. Align joints and make watertight, to prevent leakage of mortar. Keep form joints to minimum.

E. Arrange forms to allow stripping without removal of principal shores, when required to remain in place.

F. Obtain Architect/Engineer's review before framing openings in structural members which are not indicated on drawings.

G. Provide bracing to ensure stability of formwork.

H. Provide chamfer strips on external corners as shown on drawings.

I. Apply form release agent as required on formwork in accordance with manufacturers recommendations. Apply prior to placing reinforcing steel, anchoring devices and embedded items.

J. Do not apply form release agent where concrete surfaces will receive finishes or applied coverings which are affected by agent. Soak inside surfaces of untreated forms with clean water. Keep surfaces wet prior to placing concrete.

3.02 INSERTS, EMBEDDED PARTS AND OPENINGS

A. Provide formed openings where required for pipes, conduits, sleeves and other work to be embedded in, or passing through, concrete members.

B. Locate and set in place items which will be cast directly into concrete.

C. Coordinate work of other sections and cooperate with trades involved in forming and setting openings, slots, recesses, chases, sleeves, bolts, anchors and other inserts. Do not perform work unless specifically indicated on drawings or reviewed prior to installation.

D. Install concrete accessories in accordance with manufacturer's recommendations; straight, level and plumb. Ensure items are not disturbed during concrete placement.

E. Provide temporary openings in formwork where required to facilitate cleaning and inspection. Locate openings at bottom of forms to allow flushing water to drain. Close temporary openings with tight fitting
panels, flush with inside face of forms, neatly fitted so that joints will not be apparent in exposed concrete surfaces.

3.03 FIELD QUALITY CONTROL

A. Inspect and check completed formwork, shoring and bracing to ensure that work is in accordance with formwork design, and that supports, fastenings, wedges, ties and parts are secure.

B. Form lumber reused in the structure shall be cleaned and grade marked Douglas Fir of the grade specified for the purpose. Plywood shall be cleaned and recoated. Do not patch formwork.

C. Architect/Engineer shall approve lumber to be reused.

3.04 - CLEANING

A. Clean forms as erection proceeds to remove foreign matter. Remove cuttings, shavings and debris from within forms. Flush with water or use compressed air to remove remaining foreign matter. Ensure that water and debris drain to exterior through clean-out ports.

3.05 FORM REMOVAL

A. Do not remove forms and bracing until all the following conditions have been met:

1. Concrete has gained sufficient strength to carry its own weight, construction loads and design loads which are liable to be placed upon it.

2. The appropriate number of days as listed below has passed, (1 day = 24 hours where average temperature is above 55 degrees).

3. The concrete has achieved a minimum of 75% of the design compressive strength as shown by field cured test cylinders.

B. Edge forms 8 inches or less in height at slabs and panels, and forms at foundations and curbs shall remain in place a minimum of one day after pouring.

C. Forms for cast-in-place wall columns and bond beams shall remain in place 2 days minimum after pouring. At cast-in-place walls, forms shall remain in place seven (7) days minimum after pouring and shall not be removed until concrete has set adequately to prevent damage during and after removal.

D. Forms for structural non-post-tensioned slabs and beams shall remain in place for a minimum of 21 days. Forms for post-tensioned slabs and beams shall remain in place until the post-tensioning tendons have been stressed and the elongations have been reviewed and approved by the Engineer of Record.

E. Remove formwork progressively and in accordance with code requirements and so that no shock loads or unbalanced loads are imposed on structure.

F. Loosen forms carefully. Do not wedge pry bars, hammers or tools against concrete surfaces.

G. Store removed forms for exposed architectural concrete in manner that surfaces to be in contact with fresh concrete will not be damaged. Marked or scored forms will be rejected.

END OF SECTION

SECTION 03 15 00: CONCRETE ACCESSORIES

PART 1 - GENERAL

1.01 WORK INCLUDED

A. Installation of concrete expansion anchors

B. Installation of epoxy anchored reinforcing dowels.

C. Arranging for Special Inspection of all anchor and dowel installations, where specified on the drawings.

1.02 RELATED WORK

A. Section 03 20 00: Concrete Reinforcement.

B. Section 03 30 00: Cast-in-place concrete.

1.03 QUALITY ASSURANCE

A. Standard Specification: The American Concrete Institute (ACI) "Specifications for Structural Concrete for Buildings", ACI 301-95 shall be used as a standard specification.

B. I.C.B.O. APPROVAL: All materials and procedures for installation of concrete expansion anchors and epoxy anchored reinforcing dowels shall be I.C.C. approved.

PART 2 - PRODUCTS

2.01 CONCRETE EXPANSION ANCHORS

A. Expansion anchors shall be Kwik Bolt TZ expansion anchors as manufactured by Hilti, Tulsa, OK. Preparation of holes and installation of anchors shall conform to manufacturer's recommendations and I.C.C. ES Report No. ESR-1917.

B. Substitutions of product or manufacturer must be approved in writing ten days prior to bid date, by Architect or Engineer of record.

2.02 EPOXY ANCHORED REINFORCING DOWELS

A. Epoxy anchors & dowels shall be installed using 'Hilti HIT RE-500-SD Adhesive Anchor System' as manufactured by Hilti, Inc., Tulsa, Oklahoma. Preparation of holes shall conform to manufacturer's recommendations and ICC Report No ESR-2322.

Threaded rods shall be grade “ASTM F568M Class 5.8”, “ASTM 193, B7”, or “ASTM F593 316-SS”, UNO on the drawings. Reinforcement bars shall be “ASTM A 615” Grade 60 Min., UNO on the drawings (Anchors and dowels shall not be installed in concrete less that 28 days old without written approval from the engineer.)

B. Substitutions of product or manufacturer must be approved in writing ten days prior to bid date, by Architect or Engineer of record.

2.03 ACCESSORY MATERIALS

A. Reinforcing dowels shall be Grade 60, conforming to ASTM A615.

PART 3 - EXECUTION

3.01 INSTALLATION

A. Holes for anchors shall be located as required by the drawings but shall be located no closer than 1½" from a concrete edge.

B. Diameter of holes shall be as specified in the I.C.C. Report for the size and type of anchor being installed. Depth of holes shall be as necessary to achieve the minimum anchor embedment specified on the Drawings.

C. Holes shall be prepared as required by the applicable I.C.C. Report. As a minimum, holes shall be cleaned of all dust and debris prior to installation of anchors.

D. Concrete expansion anchors shall be installed to the minimum torque specified in the I.C.C. Report.

E. Maximum temperature of concrete for installation of epoxy anchored reinforcing dowels shall be 100 degrees Fahrenheit.

3.02 SPECIAL INSPECTION

A. Special Inspection of anchor installations shall be provided for all epoxy anchored reinforcing dowels and for all concrete expansion anchors where noted on the Drawings.

B. The Special Inspector shall be a qualified person who shall demonstrate his performance to the satisfaction of the Building Official, for inspection of concrete anchors and dowels.

C. Reports shall be prepared by the Special Inspector and shall be submitted to the City and to the Architect/Engineer.

END OF SECTION

SECTION 03 20 00: CONCRETE REINFORCEMENT

PART 1 - GENERAL

1.01 WORK INCLUDED

A. Reinforcing steel bars, and welded steel wire fabric for cast-in-place concrete, complete with tie wire.

B. Support chairs, bolsters, bar supports, spacers for reinforcing.

C. Welding of reinforcement bars.

1.02 RELATED WORK

A. Section 03 10 00: Concrete Formwork.

B. Section 03 30 00: Cast-in-place concrete.

1.03 QUALITY ASSURANCE

A. Standard Specification: The American Concrete Institute (ACI) "Specifications for Structural Concrete for Buildings", ACI 301-05 shall be used as a standard specification.

B. Codes:

1. The current edition of the California Building Code (C.B.C.) Volume 2, Chapter 19, "Concrete". All concrete reinforcement shall meet the requirements of this code. This code supplements the standard specification and shall supersede the standard specification in cases where provisions are in conflict.

2. American Welding Society "Recommended Practices for Welding Reinforcing Steel, Metal Inserts and Connections in Reinforced Concrete Construction", (AWS D 1.4), current edition.

1.04 SOURCE QUALITY CONTROL

A. Submit two certified copies of mill test report indicating physical and chemical analysis of precast concrete wall panel reinforcement bars shown welded on drawings.

1.05 REFERENCE STANDARDS

A. ACI 318 - Building Code Requirements for Reinforced Concrete.

B. ACI 301 - Specifications for Structural Concrete for Building.

C. Chapter 19 "Concrete" California Building Code

D. ASTM A185 - Welded Steel Wire Fabric for Concrete Reinforcement.

E. ASTM A615 - Deformed and Plain Billet Steel Bars for Concrete Reinforcement.

F. AWS D1.4 - Welding Reinforcing Steel, Metal Inserts and Connections in Reinforced Concrete Construction.

G. ACI 315 - American Concrete Institute - Manual of Standard Practice.

1.06 SHOP DRAWINGS

A. Submit shop drawings in accordance with the General Conditions.

B. Indicate bar sizes, spacings, locations, and quantities of reinforcing steel and wire fabric, bending and cutting schedules, and supporting and spacing devices and splice locations.

PART 2 - PRODUCTS

2.01 REINFORCING

Grade	Minimum Yield Strength
40	40,000 psi
60	60,000 psi

A. Reinforcing Steel: Deformed billet steel bars, ASTM A615; 60 ksi yield grade unless otherwise noted on plans and sections.

B. Special Ductile Quality (SDQ) Reinforcing Steel: ASTM A706; 60ksi yield grade.

C. Welded Steel Wire Fabric: Plain type, ASTM A185; plain finish.

2.02 ACCESSORY MATERIALS

A. Tie Wire: Minimum 16 gage annealed type, or patented system accepted by Architect/Engineer. Conform to ASTM A82.

B. Chairs, Bolsters, Bar Supports, Spacers: Sized and shaped for strength and support of reinforcing during construction conditions, non-corrodible or galvanized metal.

2.03 FABRICATION

A. Fabricate concrete reinforcing in accordance with ACI 315.

B. Locate reinforcing splices, not indicated on drawings, at points of minimum stress. Location of splices shall be reviewed by Architect/Engineer. Any splice provided that is not shown on drawings shall conform to the requirements of a CBC Class B tension splice, with a minimum length of 24". Use top bar splice requirement as applies.

C. Where indicated, weld reinforcing bars in accordance with AWS D1.4.

PART 3 - EXECUTION

3.01 PLACEMENT

A. Place steel reinforcement and dowels accurately as detailed on the drawings, positively secured and supported by chairs, spacers or hangers, in such a manner that no displacement occurs while concrete is being poured.

1. The minimum clear distance between bars one and one-half (1-1/2) times the nominal diameter for round bars, but in no case less than one and one-half (1-1/2) inches.

2. Provide laps and bends as detailed on the drawings. Comply with the requirements of Section 1912 of the Uniform Building Code, current edition. Horizontal bars may be wired together at laps, separate at points of support as noted above.

3. Minimum concrete covering of reinforcing bars unless otherwise shown on drawings:

3.1. Concrete deposited against ground =3 inches

3.2. Concrete surfaces exposed to weather or ground after removal of forms
#6 bars and larger =2 inches
#5 bars and smalle = 1-1/2 inch

3.3. Walls above grade =1-1/2 inch

3.4. Top and Bottom of Elevated Slab = 1 inch

3.5. Top of mat slab = 1 inch

3.6 All other conditions =1-1/2 inches

B. Not permitted: Use of bars with kinks or bends not as shown, bars injured due to bending or straightening, heating bars for bending, field bending of bars partially embedded in concrete, tack welding of bars and wet-setting of dowels.

C. Cleaning Reinforcement: Reinforcement at time of pour to be free of all coatings that would impair bond to concrete.

D. Inspection: All reinforcing shall be approved by the Architect/Engineer prior to pouring of concrete. Contractor shall notify the Architect/Engineer at least forty-eight (48) hours ahead of concrete pour, and no concrete shall be placed until all reinforcing steel has been installed by the Contractor and reviewed by the Architect/Engineer or their approved representative.

E. Welding of Reinforcement Bars: Reinforcement bars shall be welded where noted on the drawings. Only certified welders shall be employed for this work. Preheat requirements for welding rebars shall be based on carbon equivalent. Contractor shall submit certified chemical composition as shown in the mill report of grade 60 bars to Testing Agency and Architect/Engineers for review of preheat temperature requirement. No rebars shall be preheated more than that required by American Welding Society (AWS D 1.4) current edition.

3.02 REINFORCEMENT BAR WELDING INSPECTION

A. TESTING LABORATORY

1. Reinforcement bar weldings shall be visually inspected by a testing laboratory. Results of reinforcement bar welding inspection shall be submitted to the City and Architect/Engineer. Testing shall be paid for by the owner.

END OF SECTION

Division 5:
Metals

SECTION 05 12 00: STRUCTURAL STEEL AND MISCELLANEOUS METAL

PART 1 - GENERAL

1.01 WORK INCLUDED

A. Structural steel framing members, pipe columns, tube columns, miscellaneous metals, etc. not included in other sections, and with required bracing, welds and fasteners.

B. Bolts, nuts, washers, angles, channels, inserts, straps, connectors, plate hangers, tie-downs, etc., not part of other work. Include all bolts which pass through fabricated steel. Wood to wood bolts by others.

C. Shop coat painting.

D. Steel pipe guardrails.

1.02 WORK FURNISHED BUT INSTALLED BY OTHERS

A. Section 03100: Anchorages cast in concrete.

1.03 RELATED WORK

A. Section 03300: Grouting base plates and bearing plates.

1.04 REFERENCES

A. ASTM A992 for all W shapes, ASTM A36-for all other shapes unless noted otherwise.

B. ASTM A53-Hot-Dipped, Zinc-coated Welded and Seamless Steel Pipe.

C. ASTM-A307-Machine Bolts.

D. ASTM-A325-High Strength Bolts.

E. ASTM-A500-Grade B, Cold-Formed Welded and Seamless Carbon Steel Structural Tubing in Shapes.

F. AWS D1.1-Structural Welding Code.

G. AISC-ASD-Specification for the design, fabrication and erection of structural steel for buildings.

H. FS TT-P-31-Paint, Oil: Iron Oxide, Ready Mix, Red and Brown.

1.05 SHOP DRAWINGS

A. Submit shop drawings in accordance with the General Conditions. Submit three copies of each shop drawing.

B. Indicate profiles, sizes, spacing, and locations of structural members, connections, attachments, fasteners, cambers.

C. Indicate welded connections using standard AWS welding symbols. Indicate net weld lengths.

PART 2 - PRODUCTS

2.01 MATERIALS

A. Structural Steel, W-Shapes: ASTM A992.

B. Structural Steel, all other shapes except Tube and Pipe: ASTM A36.

C. Structural Tubing: ASTM A500, Grade B.

D. Structural Pipe Column: ASTM A53, Grade B or ASTM A501.

E. Structural Steel Plate: ASTM A572, Grade 50

F. Bolts, Nuts, and Washers: ASTM A307, unless otherwise noted.

G. High strength bolts: ASTM A325 (Friction type).

H. Welding Materials: AWS D1.1; type required for materials being welded.

I. Primer: FS TT-P-31, red, brown.

J. Threaded Rods: ASTM A36 meeting the mechanical requirements of ASTM A307.

2.02 FABRICATION

A. Fabricate structural steel members in accordance with AISC-ASD Specification.

B. Conform to Chapter 22, California Building Code; current edition.

C. Welding: Welder qualification requirements, welding procedures, etc. according to AISC-ASD Specification Chapter M. Employ only certified welders. All butt welds

shall be full penetration welds unless otherwise noted. Arc welding electrodes shall be E70 Series. All welds on hand and guardrails are to be ground smooth. Tie plates shall be welded as shown on the drawings.

D. Holes for bolts or rivets shall be punched or drilled 1/16" larger than normal bolt. Holes in column base plates may be 5/16" larger than anchor bolt diameter only if washers field welded to the base plate are provided under the nuts.

E. Steel shims or leveling nuts shall be used to level columns.

2.03 FINISH

A. Clean, prepare and shop prime all steel work. Do not prime surfaces to be field welded or in contact with concrete or contact surfaces in friction-type connections. Contact surfaces of friction-type connections shall be free of oil, paint, lacquer, or other coatings. All steel exposed to weather shall be hot-dipped galvanized. Verify with architect for any additional weather protection requirement.

PART 3 - EXECUTION

3.01 ERECTION

A. Erect structural steel in accordance with AISC-ASD Specification.

B. Make provision for erection loads, and for sufficient temporary bracing to maintain structure safe, plumb and in true alignment until completion of erection and installation of permanent bracing.

C. Do not field cut or alter structural members without approval of Architect/Engineer.

D. After erection, prime welds, abrasions, and surfaces not shop primed, galvanized, except surfaces to be in contact with concrete. Use a primer consistent with shop coat. Use primer recommended for galvanized surfaces.

E. Bolting: Securely bolt or weld the work as erection progresses to provide for all dead load, lateral forces and erection stresses.

3.02 QUALITY CONTROL

A. Special inspection shall be provided for all structural welding, including welding of reinforcing steel except as noted below.

1. Welding done in a fabricator's shop, approved by the City Building Official.

2. Unless noted "Special Inspection Required", all single pass fillet welds not exceeding 5/16” in size may have periodic inspection in accordance with C.B.C. Section 1704.3.

B. Special inspection shall be provided during all high strength bolt installations and tightening operations except as noted below.

1. The Special Inspector need not be present during the entire installation and tightening operation, provided he has:

i) Inspected the surfaces and bolt type for conformance to plans and specifications prior to start of bolting.

ii) And will, upon completion of all bolting, verify the minimum specified bolt tension for 10 percent of the bolts for each connection with a minimum of two bolts per connection.

END OF SECTION

SECTION 055000 – METAL FABRICATIONS

1.0 GENERAL

1.1 SUMMARY

A. This Section includes all labor, materials, equipment, operations, or methods listed, mentioned or scheduled on plans and/or herein specified, including all incidentals necessary and required for completion of work under this Section.

1. Countertop supports.

2. Galvanized and painted steel pipe hand rails and copper rain water leaders

3. Ladder to roof and between roof levels.

4. Miscellaneous channels, angles and other shapes as required.

5. Rough Hardware.

1.2 RELATED SECTIONS

A. Documents affecting work of this Section include, but are not necessarily limited to, General Conditions, Special Conditions and Division 1 of these Contract Documents.

B. Section 077100 - Roof Specialties

C. Section 099100 - Painting: For finish painting of itemsnot specified to have factory finish.

D. Products Furnished but Not Installed Under This Section

1. Section 031000 - Concrete Formwork: Placement of metal fabrications to be embedded in concrete.

1.3 REFERENCES

A. AISC - American Institute of Steel Construction

B. ANSI - American National Standards Institute

1. A14.3 - Safety Requirements for Fixed Ladders.

2. B18.6.3 - Machine Screws and Machine Screw Nuts (M4)

3. B18.21.1 - Lock Washers (Inch Series)

4. B18.22.1 - Plain Washers.

C. ASTM - American Society for Testing and Materials

1. A27 - Standard Specification for Steel Castings, Carbon, for General Application.

2. A36 - Standard Specification for Structural Steel.

3. A47 - Standard Specification for Ferritic Malleable Iron Castings.

4. A123 - Standard Specification for Zinc (Hot-Dip Galvanized) Coatings on Iron and Steel Products.

5. A153 - Standard Specification for Zinc Coating (Hot-Dip) on Iron and Steel Hardware.

6. A276 - Standard Specification for Stainless Steel and Heat-Resisting Steel Bars and Shapes.

7. A307 - Standard Specification for Carbon Steel Bolts and Studs, 60,000 Psi Tensile Strength.

8. A500 - Standard Specification for Cold-Formed Welded and Seamless Carbon Steel Structural Tubing in Rounds and Shapes.

9. A501 - Standard Specification for Hot-Formed Welded and Seamless Carbon Steel Structural Tubing.

10. A563 - Standard Specification for Carbon and Alloy Steel Nuts.

11. A780 - Practice for Repair of Damaged Hot-Dip Galvanized Coatings.

12. B221 - Standard Specification for Aluminum-Alloy Extruded Bars, Rods, Wire, Shapes and Tubes.

13. B633 - Standard Specification for Electro-Deposited Coatings of Zinc on Iron and Steel.

14. C1107 - Standard Specification for Packaged Dry, Hydraulic-Cement Grout (Non-Shrink).

15. E488 - Test Method for Strength of Anchors in Concrete and Masonry Elements

16. F593 - Standard Specification for Stainless Steel Bolts, Hex Cap Screws and Studs.

17. F594 - Standard Specification for Stainless Steel Nuts.

D. AWS - American Welding Society

1. D1.1 - Structural Welding Code - Steel.

2. D1.3 - Structural Welding Code - Sheet Steel.

E. CBC - California Building Code, 2016 Edition

F. FS - Federal Specification

1. FF-B-588 - Bolt, Toggle and Expansion Sleeve, Screw.

G. NAAMM - National Association of Architectural Metal Manufacturers

1. MFM - Metal Finishes Manual for Architectural and Metal Products.

H. SSPC - The Society for Protective Coatings

1. PA-1 - Paint Application Specification No. 1.

2. SP-2 - Surface Preparation Specification No. 2: Hand Tool Cleaning.

3. SP-3 - Surface Preparation Specification No. 3: Power Tool Cleaning.

4. SP-6 - Surface Preparation Specification No. 6: Commercial Blast Cleaning.

1.4 SYSTEM DESCRIPTION

A. Design Requirements

1. Design work to support normally imposed loads and in conformity with AISC requirements.

2. Structural Performance of Handrails and Railing Systems: Engineer, fabricate and install handrails and railing systems to withstand structural loads without exceeding the allowable design working stress

of the materials involved, including anchors and connections. Apply each load to produce the maximum stress in each of the respective components of each metal fabrication in accordance with CBC Table 16-B.

3. Provide for expansion and contraction.

4. Ladder to Roof Access Hatch and Ladders Above Roof: Engineer, fabricate and install ladders in accordance with requirements of NAAMM, except that for vertical ladders, the distance from ladder rung to wall shall not be less than 7 inches.

1.5 SUBMITTALS

A. Product Data: Submit manufacturer's product data for paint products and grout.

B. Shop Drawings: Submit shop drawings detailing fabrication and erection of each metal fabrication indicated. Include plans, elevations, sections, and details of metal fabrications and their connections. Show anchorage and accessory items. Provide templates for anchors and bolts specified for installation under other Sections.

C. Samples: Submit samples representative of materials and finished products as may be requested by the Architect.

D. Quality Control Submittals

1. Certificates: Welder certificates signed by Contractor certifying that welders comply with requirements specified under the "Quality Assurance" Article.

1.6 QUALITY ASSURANCE

A. Qualifications

1. Fabricator Firm experienced in producing metal fabrications similar to those indicated for this Project with a record of successful in-service performance, and with sufficient production capacity to produce required units without delaying the Work.

B. Welding Standards: Comply with applicable provisions of AWS D1.1 and AWS D1.3.

1. Certify that each welder has satisfactorily passed AWS qualification tests for welding processes involved and, if pertinent, has undergone recertification.

1.7 PROJECT CONDITIONS

A. Field Measurements

1. Check actual locations of walls and other construction to which metal fabrications must fit by accurate field measurements before fabrication. Show recorded measurements on final shop drawings.

2. Coordinate fabrication schedule with construction progress to avoid delaying the Work.

a. Where field measurements cannot be made without delaying the Work, guarantee dimensions and proceed with fabricating products without field measurements. Coordinate construction to ensure that actual dimensions correspond to guaranteed dimensions. Allow for trimming and fitting.

2.0 PRODUCTS

2.1 MATERIALS

A. Metal Surfaces, General: For metal fabrications exposed to view in the completed Work, provide materials selected for their surface flatness, smoothness, and freedom from surface blemishes. Do not use materials with exposed pitting, seam marks, roller marks, rolled trade names or roughness.

B. Steel and Iron

1. Steel Plates, Shapes and Bars: ASTM A36.

2. Stainless Steel Shapes: ASTM A276.

3. Cold-Formed Steel Tubing: ASTMA500.

4. Hot-Formed Steel Tubing: ASTMA501.

a. Where indicated, provide tubing with hot-dip galvanized coating per ASTM A53.

5. Concrete Inserts: Anchors of type indicated below, fabricated from corrosion resistant materials capable of sustaining, without failure, the load imposed within a safety factor of 4, as determined by testing per ASTM E488, conducted by a qualified independent testing agency.

a. Threaded or wedge type; galvanized ferrous castings, either ASTM A47 malleable iron or ASTM A27 cast steel. Provide

bolts, washers, and shims as required, hot-dip galvanized in accordance with ASTM A153.

C. Aluminum Extrusions; ASTM B221, alloy 6063-T6.

D. Fasteners: Provide plated fasteners complying with ASTM B633, Class Fe/Zn 25 for electrodeposited zinc coating, for exterior use or where built into exterior walls. Select fasteners for the type, grade, and class required.

1. Bolts and Nuts: Regular hexagon-head bolts, ASTM A307, Grade A, with hex nuts, ASTM A563, and, where indicated, flat washers.

2. Machine Screws: ANSI B18.6.3.

3. Plain Washers: Round, carbon steel, ANSI B18.22.1.

4. Lock Washers: Helical, spring type, carbon steel, ANSI B18.21.1.

5. Expansion Anchors; Anchor bolt and sleeve assembly of material indicated below with capability to sustain, without failure, a load equal to 6 times the load imposed when installed in unit masonry and equal to 4 times the load imposed when installed in concrete as determined by testing per ASTM E488 conducted by a qualified independent testing agency.

a. Material: Carbon steel components zinc-plated to comply with ASTM B633, Class Fe/Zn 5.

b. Material: Group 1 alloy 304 or 316 stainless steel bolts and nuts complying with ASTM F593 and ASTM F594.

6. Toggle Bolts: FS FF-B-588, tumble-wing type, class and style as required.

E. Welding Materials: AWS D1.1, type required for materials being welded.

F. Coatings

1. Coatings for Protection of Dissimilar Materials

a. Dissimilar Metals: Bituminous type materials conforming with MIL Standard 889.

b. Aluminum in Contact with Concrete, Metal, Wood or other Absorptive Material.

2. Shop Primer for Ferrous Metal: VOC compliant, fast-curing, lead and

chromate free, universal modified alkyd primer with good resistance to corrosion, compatible with finish paint systems.

3. Galvanizing Repair Paint: High zinc dust content paint, with dry film containing not less than 94 percent zinc dust by weight, as manufactured by Parker Amchem, "Galvaprep SG"; Sherwin Williams, "Zinc Clad I"; Alvin Products, Inc., “Galvax”; ZRC Chemical Products Co., “ZRC Cold Galvanizing Compound", or equal.

G. Nonshrink, Nonmetallic Grout

1. Factory-packaged, nonstaining, noncorrosive, nongaseous grout complying with ASTM C1107. Provide grout specifically recommended by manufacturer for interior and exterior applications.

2. Manufacturer. Five Star Products, "Five Star Grout"; Master Builders Technologies, Inc., "Masterflow 928 and 713"; W. R. Meadows, Inc., "Sealtight 588 Grout", or equal.

H. Handrail and Railing Brackets: As indicated on the Drawings.

I. Galvanized Welded Wire Mesh Panels: 2 inches, center to center, 0.128-inch diameter galvanized wire.

2.2 FABRICATION, GENERAL

A. Form metal fabrications from materials of size, thickness, and shapes indicated but not less than that needed to comply with performance requirements indicated. Work to dimensions indicated or accepted on shop drawings, using proven details of fabrication and support. Use type of materials indicated or specified for various components of each metal fabrication.

B. Form exposed work true to line and level with accurate angles and surfaces and straight sharp edges.

C. Allow for thermal movement resulting from the following maximum change (range) in ambient temperature in the design, fabrication, and installation of installed metal assemblies to prevent buckling, opening up of joints, and overstressing of welds and fasteners. Base design calculations on actual surface temperatures of metals due to both solar heat gain and nighttime sky heat loss.

1. Temperature Change (Range): 100 degrees Fahrenheit.

D. Shear and punch metals cleanly and accurately. Remove burrs.

E. Ease exposed edges to a radius of approximately 1/32-inch, unless otherwise indicated. Form bent-metal comers to smallest radius possible without causing grain separation or otherwise impairing work.

F. Remove sharp or rough areas on exposed traffic surfaces.

G. Weld comers and seams continuously to comply with the following:

1. Use materials and methods that minimize distortion and develop strength and corrosion resistance of base metals.

2. Obtain fusion without undercut or overlap.

3. Remove welding flux immediately.

4. At exposed connections, finish exposed welds and surfaces smooth and blended so that no roughness shows after finishing, and contour of welded surface matches those adjacent.

H. Form exposed connections with hairline joints, flush and smooth, using concealed fasteners wherever possible. Use exposed fasteners of type indicated or, if not indicated, Phillips flat-head (countersunk) screws or bolts. Locate joints where least conspicuous.

I. Provide for anchorage of type indicated; coordinate with supporting structure. Fabricate and space anchoring devices to secure metal fabrications rigidly in place and to support indicated loads.

J. Shop Assembly: Preassemble items in shop to greatest extent possible to minimize field splicing and assembly. Disassemble units only as necessary for shipping and handling limitations. Use connections that maintain structural value of joined pieces. Clearly mark units for reassembly and coordinated installation.

K. Cut, reinforce, drill, and tap metal fabrications as indicated to receive finish hardware, screws, and similar items.

L. Fabricate joints that will be exposed to weather in a manner to exclude water, or provide weep holes where water may accumulate.

M. Ladders

1. General: Fabricate steel and aluminum ladders for the locations shown, with dimensions, spacings, details, and anchorages as indicated. Comply with requirements in accordance with NAAMM and ANSI A14.3.

2. Side Rails*. Continuous, steel, 5/8-inch by 2-1/2 inch flat bars, with eased edges, spaced 18 inches apart and aluminum rails.

3. Bar Rungs: 3/4-inch diameter solid steel or aluminum bars, spaced 12 inches on center.

4. Fit rungs in centerline of side rails, plug weld and grind smooth on outer rail faces.

5. Support ladder at top and bottom and at intermediate points spaced not more than 60 inches on center with welded or bolted steel or aluminum brackets.

    a. Size brackets to support design dead and live loads indicated and to hold centerline of ladder rungs clear of the wall surface by not less than 7 inches for roof ladder.

    b. Extend side rails 42 inches above top rung, and return rails to wall or structure unless other secure handholds are provided. If the adjacent structure does not extend above the top rung, goose-neck the extended rails back to the structure to provide secure ladder access.

6. Provide nonslip surfaces on top of each rung by coating with abrasive material metallically bonded to the rung by a proprietary process, as manufactured by 1KG Borden, "Mebac"; W. S. Molnar Co., “Slip-Not", or equal.

7. Galvanize steel ladder, including brackets and fasteners.

2.3 MISCELLANEOUS FRAMING AND SUPPORTS

A. General: Provide steel framing and supports for applications indicated that are not a part of structural steel framework as required to complete the Work.

B. Fabricate units to sizes, shapes, and profiles indicated and required to receive other adjacent construction retained by framing and supports. Fabricate from structural steel shapes, plates, and steel bars of welded construction using mitered joints for field connection. Cut, drill, and tap units to receive hardware, hangers, and similar items.

1. Equip units with integrally welded anchors for casting into concrete or building into masonry. Furnish inserts if units must be installed after concrete is placed.

    a. Except as otherwise indicated, space anchors 24 inches on center

and provide minimum anchor units in the form of steel straps 1-1/4 inches wide by 1/4-inch thick by 8 inches long.

C. Galvanize miscellaneous interior and exterior framing and supports.

2.4 FINISHES, GENERAL

A. Comply with NAAMM MFM for recommendations relative to applying and designing finishes. Finish metal fabrications after assembly.

2.5 STEEL AND IRON FINISHES

A. Galvanizing: For those items indicated for galvanizing, apply zinc coating by the hot-dip process complying with the following requirements:

1. ASTM A153 for galvanizing iron and steel hardware.

2. ASTM A123 for galvanizing both fabricated and unfabricated iron and steel products made of uncoated rolled, pressed, and forged shapes, plates, bars, and strip 0.0299-inch thick or thicker.

B. Preparation for Shop Priming: Prepare uncoated ferrous metal surfaces to comply with minimum requirements indicated below for SSPC surface preparation specifications and environmental exposure conditions of installed metal fabrications:

1. Typical: SSPC SP-2, SSPC SP-3 as required.

2. Architectural Exposed Steel Fabrications: SSPC SP-6.

C. Apply shop primer to uncoated surfaces of metal fabrications, except those with galvanized finishes or to be embedded in concrete or masonry, unless otherwise indicated. Comply with requirements of SSPC PA-1 for shop painting.

D. Finish Painting: As specified in Section 099000, for steel where indicated.

2.6 ALUMINUM FINISHES

A. Aluminum

1. Mill finish or anodized finish, where indicated on the Drawings.

2. Powder Coat Finish: Manufacturer's standard with color as selected by the Architect, where indicated on the Drawings.

3.0 EXECUTION

3.1 PREPARATION

A. Coordinate and furnish anchorages, setting drawings, diagrams, templates, instructions, and directions for installing anchorages, including concrete inserts, sleeves, anchor bolts and miscellaneous items having integral anchors that are to be embedded in concrete or masonry construction. Coordinate delivery of such items to Project site.

B. Set sleeves in concrete with tops flush with finish surface elevations. Protect sleeves from water and concrete entry.

3.2 INSTALLATION, GENERAL

A. Fastening to In-Place Construction: Provide anchorage devices and fasteners where necessary for securing miscellaneous metal fabrications to in-place construction. Include threaded fasteners for concrete and masonry inserts, toggle bolts, through-bolts, lag bolts, wood screws, and other connectors as required.

B. Cutting, Fitting and Placement: Perform cutting, drilling, and Fitting required for installing miscellaneous metal fabrications. Set metal fabrication accurately in location, alignment and elevation; with edges and surfaces level, plumb, true and free of rack; and measured from established lines and levels.

C. Provide temporary bracing or anchors in formwork for items that are to be built into concrete masonry or similar construction.

D. Fit exposed connections accurately together to form hairline joints. Weld connections that are not to be left as exposed joints but cannot be shop-welded because of shipping size limitations. Do not weld, cut, or abrade the surfaces of exterior units that have been hot-dip galvanized after fabrication and are intended for bolted or screwed field connections.

E. Field Welding: Comply with the following requirements:

1. Use materials and methods that minimize distortion and develop strength and corrosion resistance of base metals.

2. Obtain fusion without undercut or overlap.

3. Remove welding flux immediately.

4. At exposed connections, finish exposed welds and surfaces smooth and blended so that no roughness shows after finishing, and contour of

welded surface matches those adjacent.

F. Corrosion Protection: Coat concealed surfaces of aluminum that will come into contact with grout, concrete, masonry, wood, or dissimilar metals with a heavy coat of bituminous paint.

3.3 ADJUSTING AND CLEAN UP

A. Touchup Painting: Immediately after erection, clean field welds, bolted connections, and abraded areas of shop paint, and paint exposed areas with same material as used for shop painting to comply with SSPC PA-1 requirements for touching up shop-painted surfaces.

1. Apply by brush or spray to provide a 2.0-mil minimum dry film thickness.

B. For galvanized surfaces, clean welds, bolted connections and abraded areas, and apply galvanizing repair paint to comply with ASTM A780.

END OF SECTION

Division 6:
Wood, Plastics & Composites

SECTION 06 10 00: ROUGH CARPENTRY
DIVISION 6 – WOOD, PLASTICS, AND COMPOSITES

PART 1 - GENERAL

1.01 GENERAL

A. The requirements/provisions of the General and Supplementary Conditions and Division 1 Specification Section shall apply to this section.

1.02 DESCRIPTION OF WORK

A. Summary: The work included under this section consists of furnishing all material, supplies, equipment, tools, transportation and facilities and performing all labor and services necessary for, required in connection with or properly incidental to furnishing and installing rough carpentry, as described in this section of the specifications, shown on the accompanying drawings, or reasonably implied therefrom.

B. Work Included:

1. Furnishing and installing wood framing including manufactured floor joists and/or trusses.

2. Furnishing and installing glu-lam beams

3. Furnishing and installing sheathing

4. Furnishing and installing light gage metal connectors

5. Furnishing and installing adhesive for floor sheathing

6. Furnishing and installing bolts, lag screws, washers, spikes and nails necessary for connecting wood framing and sheathing.

7. Installing miscellaneous metal connectors

8. Temporary bracing

C. Related Work Specified Elsewhere:

1. Concrete Formwork; Section 03 10 00

2. Structural Steel and Miscellaneous Iron; Section 05 50 00

1.03 REFERENCE STANDARDS

A. The following is a list of reference standards referred to in this portion of the specifications.

1. ASTM A307, "Specification for Carbon Steel Externally Threaded Standard Fasteners"

2. W.C.L.I.B., "Standard Grading and Dressing Rules No. 17"

3. ASTM F 1667-00, "Standard Specification for Driven Fasteners: Nails, Spikes, and Staples"

1.04 QUALITY ASSURANCE

A. Codes and Standards: Comply with all Federal, State and Local Codes and Safety Regulations. In addition, comply with the provisions of the following codes, specifications, and standards, except where more stringent requirements are shown or specified:

1. "California Building Code", current governing edition.

2 National Forest Products Association, "National Design Specification for Wood Construction".

3. American Plywood Association, "U.S. Product Standard PS 2-92".

4. Laminated Members should be in conformance with the Standard Specifications for Structural Glue-Laminated Timber per ANSI/AITC A190.1-1992.

B. Grade Marks:

1. All framing lumber shall be identified by the grade stamp of the West Coast Lumber Inspection Bureau.

2. All sheathing shall be identified as to species, grade, and glue type and shall bear the identification grade mark of APA. All glu-lam beams shall be stamped with an AITC product quality mark.

C. Certificates of Conformance: The Contractor shall provide AITC Certificate of Conformance for glu-lam beams in accordance with the requirements of Section 1.5, "Submittals", of this Specification Section.

D. Testing and Inspection:

1. The Owner shall employ an independent testing laboratory to perform the following inspections and tests, and submit certified test results. The Contractor will cooperate with and notify Owner's agent at least 24 hours in advance of inspections required:

    a. The Owner's agent shall make field inspections and perform testing in accordance with the requirements of Part 3, "Execution", of this specification section.

1.05 SUBMITTALS

A. General Requirements:

1. Submittals shall be made to Architect/Engineer in accordance with the requirements of Section 01300, "Shop Drawings, Product Date and Samples" of these specifications.

2. Construction of wood framing, glu-lam erection, and sheathing shall not begin until Contractor has received submittals reviewed by Architect/Engineer governing all aspects of the intended work.

B. Shop Drawings:

1. Shop drawings for glu-lam beam fabrication shall be submitted that show beam lengths, sizes, camber, seat cuts, notches, and all details of fabrication including, grade, type of glue, combination type, appearance grade, and type of wrapping.

2. The contractor shall submit shop drawings for the wood roof trusses to be installed as shown on the Contract Drawings, including layout, size of members, and connection details. In addition to the above drawings, calculations showing all stresses and deflections caused by dead and live loads shall be submitted to the Engineer for review. Drawings and calculations shall be signed by a registered civil engineer of the State of California.

C. Product Data: Manufacturer's catalog sheets including instructions for use and description of application shall be provided on each of the following materials:

1. Light gage metal connectors

D. Certificates of Conformance: The Contractor shall provide a Certificate of Conformance meeting the requirements of A.I.T.C. for all glu-lam beams.

1.06 DELIVERY STORAGE AND HANDLING

A. Deliver and store lumber glu-lam beams on sleepers and cover for protection. See general conditions for additional delivery and storage requirements.

B. Glu-lam beams shall be individually wrapped for delivery.

1.07 SEQUENCING AND SCHEDULING

A. Obtain information and instructions from other trades and suppliers in ample time to schedule and coordinate the installation of items furnished by them to be installed prior to or in conjunction with rough carpentry so provisions for their work can be made without delaying the project.

B. Do any cutting and repairing made necessary by failure or delay in complying with these requirements, at no cost to Owner.

PART 2 - PRODUCTS

2.01 FRAMING

A. Douglas Fir Coast Region, conforming to West Coast Lumber Inspection Bureau Standard Grading and Dressing Rule No. 17, as amended to date. Moisture content at time of fabrication shall not exceed 19%.

1. 2x, 3x, 4x Joists and Beams, No. 1 (1000F-b), Para. 123-B, unless noted otherwise on the drawings.

2. 6x & Larger Beams, Dense No. 1 (1550F-b), Para. 130-BB.

3. 2x, 3x, 4x Ledgers and Rafters, No. 1 (1000F-b), Para. 123-B, unless noted otherwise on the drawings.

4. 4x4 Posts, No. 1 (1450F-c), Para. 124-B, unless noted otherwise on the drawings.

5. 4x6 Posts, No. 1 (1450F-c), Para. 123-B, unless noted otherwise on the drawings.

6. 6x6 & Larger Posts, Dense No. 1 (1200F-c), Para 131-BB.

7. 2x4, 3x4 Studs and Blocking, Standard Grade, (1350F-c), Para. 122-C, unless noted otherwise. Use No. 1 (1450f-c), Para 124-B where noted on the drawings.

8. 2x6 or larger studs and blocking, No. 1 (1450F-c), Para. 123-B.

9. 2x, 3x Plates, No. 2 (875F-c), Para 124-C, unless noted otherwise on the drawings.

10. Foundation Plates: Pressure treated Douglas Fir No. 2, unless noted otherwise on the plans.

11. 4x sleepers exposed to weather, pressure treated Douglas Fir, No. 2 (1250F-b) or California Redwood No.2 (1200F-b) at contractor's option.

All pressure treated wood for interior construction shall be SBX/DOT and zinc borate treated (AWPA UC2). Pressure treated wood for exterior construction shall use MCA/MCQ preservative treatment. (Alternatively use AWPA UC3B as min and use stainless steel connectors and fasteners.)

All framing lumber 6" or larger in the least dimension shall be F.O.H.C. Redwood conforming to the Standard Specifications for grades of California Redwood Lumber of the Redwood Inspection Service, as amended to date.

B. Floor Joists: Floor joists shall be TJI series I-joist manufactured by Trus Joist Weyerhauser or approved equal
Joist manufacturer shall obtain all necessary approvals from the public agencies involved in governing construction and must provide approved and current ICC report. .

C. Roof Trusses shall be designed and manufactured by a franchised gang-nail truss manufacturer.

1. The following typical roof loads shall be used for the design of roof trusses:

Dead Load (Rec/Leasing only) : 28 psf (12.2 psf top chord, 15.8 psf bottom chord).
Dead Load (Apt.) : 22.7 psf (12.2 psf top chord, 10.5 psf bottom chord) + 6psf (@ wood platform).
Live Load : 20.0 psf
Roof Top Eqpt. Load : See arch. & mechanical drawing.

2. In addition to typical roof loads all trusses shall be designed to support any additional loads imposed on them by building components shown on the contract documents.

3. Trusses shall span between locations of bearing walls, beams or girder trusses as identified on the plans. Manufacturer shall provide camber for full dead load between locations of bearing, plus a gap at non-bearing walls as shown on the contract documents.

2.02 STRUCTURAL SHEATHING

A. General: Structural sheathing shall be plywood or oriented strand-board at contractor's option. Sheathing shall conform to American Plywood Association's U.S. Product Standard PS 1, PS-2 or PRP-108 performance standards. Each sheet shall be stamped with the PS and/or APA grademark.

1. Roof Sheathing

   a. Shall be 19/32" (5/8") T & G plywood, APA rated sheathing, exposure 1, span rating 32/16. No OSB allowed at roof.

2. Wall Sheathing

   a. Shall be 15/32" APA rated sheathing, exposure 1, span rating 32/16.
   b. Shall be 15/32" APA structural 1 rated sheathing, exposure 1, span rating 32/16, where noted on drawings as requiring structural 1 sheathing.
   c. Use plywood at walls that will receive waterproofing/building envelope membrane or at exterior/perimeter walls covered in paper and stucco.

3. Floor Sheathing

   a. Shall be 23/32" (3/4") APA Rated Sheathing, Exposure 1, Span Rating 48/24.
   b. Use plywood, exposure 1, at private decks.

2.03 PLYWOOD ADHESIVE

A. General: Floor Sheathing shall be glued at all floor joists, blocking and T & G edges. Floor Adhesive shall meet APA Specification AFG-01. Install Adhesive per manufacturer's recommendations.

2.04 LAMINATED MEMBERS

A. Laminated members shall be Douglas Fir in conformance with the Standard Specifications for Structural Glu-laminated Douglas Fir, Coast Region Timber of the West Coast Lumberman's Association.

1. Glu-lam beams shall be industrial grade.

2. AITC combination symbol 24F-V4, laminations DF/DF for simple span beams.

3. AITC combination symbol 24F-V8, laminations DF/DF at continuous span beams, cantilever beams and beams supporting tiedown.

2.05 ENGINEERED LUMBER I-JOISTS

A. I-Joists – Floor joists shall be TJI Series joists as specified on plans and manufactured by Weyerhauser, PO Box 8449, Idaho 83707. Proper storage, handling, and installation shall be per these plans and manufacturer’s recommendations.

2.06 ENGINEERED LUMBER

A. All engineered lumber beams shall be by Trus-Joist MacMillan, Boise, Idaho:

1. LVL – Laminated Veneer Lumber shall be 1.9E Microlam LVL.

2. PSL – Parallel Strand Lumber shall be 2.0E Parallam PSL.

3. LSL – Laminated Strand Lumber shall be 1.3E Timerstrand for studs, rim boards, and blocking, 1.55E Timerstrand for joists, beams, and headers.

2.07 LIGHT GAGE METAL CONNECTIONS

A. Light gage metal connectors shall be Simpson Company Strong Tie Connectors installed per manufacturer's recommendations.

2.08 NAILS

A. Nails shall be bright common wire nails, galvanized for exterior work and conform to ASTM F 1667-00.

2.09 BOLTS

A. Bolts shall conform to ASTM A307, Manufacturer to American Standard bolt and nut dimensions with "Free Fit - Class 2" treads.

PART 3 - EXECUTION

3.01 GENERAL REQUIREMENTS

A. All framing operations shall conform to the requirements of the C.B.C.

B. The moisture content of the lumber at the time of enclosure shall not exceed 19% as shown by testing.

C. Set horizontal and sloped members with crown up. Do not notch, bore or cut members for pipes, ducts, conduits, or other reasons except as shown on the drawings or as specifically approved by the Architect. Make all bearings full and all blocking solid unless otherwise indicated on the drawings. Finish all bearing surfaces on which structural members are to rest so as to give sure and even support. Where framing members slope, cut or notch the ends as required to give uniform bearing surface.

D. Joists shall be set with the crowning edge up except at cantilevers.

E. Solid blocking shall be placed at ends of spans and over supports. Cross-Bridging or solid blocking in spans shall not exceed 8 feet or less if shown on structural drawings.

F. Furnish and set all columns and studs to size, centers, and locations indicated on the drawings. Unless marked otherwise, studs for furring and partitions shall be 2" x 4" or 2" x 6", set 16" o.c. plates on concrete floors shall not be set until the concrete is finished. Cripples shall be run to the floor plates.

G. Remove all wood, including form lumber, scrap lumber, shavings and sawdust in contact with ground. Leave no wood buried in any fill or backfill.

H. Furring and blocking shall be furnished and installed where required for reception of wallboard, formation or architectural features, concealment of pipes, conduits, ducts, attachment of supports for towel holders, toilet paper holders, and other fixtures. Contractor shall consult with the trades concerned and set furring and blocking they require.

I. Fire Blocking shall be installed as shown on drawings and in accordance with the applicable Building Code.

J. Framing of openings through walls, floors, attics, and roofs shall be provided for roof vents, mechanical equipment, lighting fixtures, ducts, etc. Where one or more joists are cut, the joists supporting the trimmers shall be framed in accordance with

the drawings or if not detailed shall be doubled and well spiked. Where continuation of three or more joists is interrupted, the abutting headers and joists shall be reinforced with approved type of joist hangers.

K. Center joints of sheathing accurately over supports and nail into solid wood. Protect all sheathing from moisture by use of all required waterproof covering until the sheathing has in turn been covered by the next succeeding component or finish.

L. Lumber not grade stamped, and lumber of improper grade, shall be removed from the job site and immediately replaced by grade stamped lumber of the proper grade.

M. Other Materials: All other lumber materials, not specifically described but required for the proper completion of the work, shall be new, first quality of their respective kinds and subject to the approval of the Architect.

N. Framing Waste Factor: Contractor shall limit the overall estimated waste factor to 10% or less. Waste factor is defined as the percentage of framing material ordered in excess of the estimated material needed for construction.

3.02 EXAMINATION

A. Surface Conditions: Prior to the work of this section, carefully inspect the installed work of other trades and verify that all such work has been so installed as to allow rough carpentry to produce surfaces to the required design.

3.03 WORKMANSHIP

A. All rough carpentry shall produce joints true, tight, and well nailed with all members assembled in accordance with the drawings and with all pertinent regulations.

B. Cut all wood members to fit. Do not shim unless specifically noted.

C. Erect all members straight, plumb and accurately located. Lumber may be rejected by the Architect or Owner's Agent.

D. Carefully select all structural members. Select individual pieces so that knots and obvious defects will not interfere with making proper connections. Lumber may be rejected by the Architect, whether or not it has been installed, for excessive warp, twist, bow, or crook, or for mildew, fungus or mold as well as for improper cutting or fitting. Cut out and discard all defects which render a piece unable to serve its intended function.

3.04 INSTALLATION

A. Plates: Plates for partitions and walls shall be single at bottom and double at top. Splices in top plates shall be staggered not less than 48". Where plates are cut for passing pipes and similar items, see structural drawings for reinformcement requirements.

B. Power Driven Inserts: Wherever furring of any kind is attached to concrete or masonry, including lower plates to floors, the members shall be secured with 1/4" power driven inserts. Plates anchored to concrete floors shall be attached with pins not over 3 feet on center. All studs on vertical furring shall be attached with pins not over 4 feet on center. Each insert shall penetrate the concrete to a minimum of 1-1/2". Use washers with all inserts.

3.05 ERECTION

A. The Contractor will be responsible to erect the wood framing true to line and grade.

B. Temporary Bracing and Shoring:

1. The Contractor shall temporarily brace the wood framing in both directions and shall maintain walls, joists, beams, and other framing members plumb until the final connections of the framework and construction of diaphragms are complete.

2. The Contractor shall provide such temporary shoring and additional bracing of wood framing as required to adequately and safely support any or all loads imposed upon the structure during construction.

3.06 CLEAN UP

A. In addition to the requirements of General Conditions, keep premises clean and clear of debris caused from this portion of the work. Failure to perform clean up within 24 hours notice by the Architect or General Contractor shall be considered adequate grounds for having the work done by others at this subcontractor's expense.

3.07 FIELD QUALITY CONTROL

A. Inspections: The Owner's agent will perform the following inspections:

1. Framing Inspection: Owner's agent will inspect the completed framing, and connector installation to ensure that rough carpentry work is in accordance with the Contract Documents.

2. Sheathing Nailing Inspection: Owner's agent will inspect the sheathing nailing to ensure that sheathing is in accordance with the requirements of the Contract Documents.

END OF SECTION

SECTION 062000 – FINISH CARPENTRY

1.0 GENERAL

1.1 SUMMARY

A. This Section includes all labor, materials, equipment, operations, or methods listed, mentioned or scheduled on plans and/or herein specified, including all incidentals necessary and required for completion of work under this Section.

B. Provide and install wood panels and base and rough hardware as shown on project Drawings and as specified herein.

1.2 RELATED SECTIONS

A. Documents affecting work of this Section include, but are not necessarily limited to, General Conditions, Special Conditions and Division 1 of these Contract Documents.

B. Section 064100 - Architectural Wood Casework

C. Section 092900 - Gypsum Board

D. Section 095100 - Acoustical Ceilings

E. Section 099100 - Painting

1.3 REFERENCES

A. AISI - American Iron and Steel Institute

B. ANSI - American National Standards Institute

1. B18.2.1 - Square and Hex Bolts and Screws.

2. B18.6.1 - Wood Screws (Inch Series).

C. APA - American Plywood Association (APA)

1. Guide to Plywood Grades.

D. ASTM - American Society for Testing and Materials

1. A153 - Standard Specification for Zinc Coating (Hot-Dip) on Iron and Steel Hardware.

E. USPS - United States Product Standard

1. PS1 - Construction and Industrial Plywood.

F. Wl - Woodwork Institute 1. Manual of Millwork.

G. WRCLA.- Western Red Cedar Lumber Association

1.4 SUBMITTALS

A. Product Data: Submit for all items.

B. Shop Drawings

1. Indicate dimensioned plans, sections, elevations, large scale details, location of each item, materials and wood species, component profiles, fastenings, jointing details, finishes, accessories, hardware location and schedule of finishes.

2. Follow WI standards for shop drawings.

C. Samples

1. Wood Items: Submit samples finished as specified.

a. Face Veneer for Flitch Selection: 3 Veneer leaves representative of flitch to be used.

b. Fabricator-Finished Panels for Transparent finish: 3 veneer samples cut from selected flitch samples, laminated to pane product finished to match the Architect’s samples, 12 inches by 12 inches each.

c. At least 1 sample of finished solid stock showing complete range of variations in grain, color, and other features, minimum 6 inches width by 18 inches.

d. Samples shall be resubmitted for acceptable stain and finish until approved by the Architect.

e. Provide V x 3’ long section of tambour for approval, (to allow full circumference study).

2. All metal trim pieces and mounting hardware in 6 inch lengths.

3. Provide 2’ x 3’ sample of assembled panel system including panel joint, end condition, and outside comer mounted on plywood backing using the Z-clips, showing fully coordinated assembly. Approval required prior to proceeding with mock-up described below.

D. Mock-up

1. Wood Veneer Paneling: Develop full wall mock-up as indicated on the drawings showing all joints. Approval by architect required prior to installation of paneling the remainder of project.

1.5 QUALITY ASSURANCE

A. Plywood shall bear grade-trademarks of appropriate grading agency.

1.6 DELIVERY, STORAGE, AND HANDLING

A. Acceptance at Site: Do not deliver interior finish carpentry until environmental conditions meet requirements specified for installation areas. If finish carpentry must be stored in other than installation areas, store only where environmental conditions meet requirements specified for installation areas.

B. Storage and Protection: Keep materials under cover and dry. Protect against exposure to weather and contact with damp or wet surfaces. Stack plywood. Provide for air circulation within and around stacks and under temporary coverings.

2.0 PRODUCTS

2.1 MATERIALS

A. Lumber Standards: Furnish lumber manufactured to comply with PS 20.

1. Grade Stamps: Provide lumber with each piece factory marked with grade stamp evidencing compliance with grading rule requirements and identifying grading agency, grade, species, moisture content at time of surfacing, and mill.

2. For exposed lumber, furnish pieces with grade stamps applied to ends or back of each piece, or omit grade stamps entirely and provide certificates of grade compliance issued by inspection agency.

B. Interior Lumber

1. Wood Base for Transparent Finish: Interior wood veneer panel as specified herein except as follows:

a. Veneer. 2 ply laminated veneer with grain oriented 90 degrees for stability.

2. Miscellaneous Hardwood Trim for Transparent Finish: Cherry.

3. Miscellaneous Trim for Opaque Finish: Douglas Fir or Pine clear.

C. Paint Materials

1. Back Priming Interior Plywood: As specified in Section 099000.

D. Fasteners for Interior Finish Carp entry: Nails, screws, z-clips, and other anchoring devices of type, size, material, and finish required for application indicated to provide secure attachment, concealed where possible.

1. Provide fasteners and anchorage s with hot-dip galvanized coating complying with ASTM A153.

2. Use finish nails where exposed.

E. Glue: Aliphatic or phenolic-resin wood glue recommended by manufacturer for general carpentry use.

F. Interior Plywood Panels: APA A-A, USPS PS1, Exposure 1, thickness as indicated.

1. Formaldehyde and ammonia free core except as otherwise required for fire treated material.

2. Fire Treatment As specified in Section 060573, for plywood used in electrical and telephone room.

G. Interior Wood Veneer Panels

1. Veneer Quarter sliced cherry, WI Premium Grade, slip matched.

2. Panel Thickness: 1/2-inch unless otherwise noted.

3. Formaldehyde and ammonia free core.

H. Panel Hardware: Extruded clear anodize d aluminum hardware and trim as indicated on drawings.

1. 3/8 inch panel z-clips by Monarch Metal Fabrications, or equal.

2. Extruded clear anodized aluminum end caps and corner trim as indicated on drawings.

2.2 FABRICATION

A. Wood Moisture Content Comply with requirements of specified inspection agencies and manufacturer's recommendations for moisture content of finish carpentry on relative humidity conditions existing during time of fabrication and in installation areas.

B. Fabricate finish carpentry to dimensions, profiles, and details indicated.

1. Back out or kerf backs of the following members, except members with ends exposed in finished work:

a. Exterior standing and running trim wider than 5 inches.

b. Interior standing and running trim.

2. Ease edges of lumber less than 1 inch in nominal thickness to 1/16-inch radius.

3. Ease edges of lumber 1 inch or more in nominal thickness to 1/8-inch radius.

2.3 FINISHES

A. Shop Finishing

1. Back Priming: Back prime all concealed wood surfaces.

B. Field Finishing

1. Transparent finish paint in accordance with requirements of Section 064100.

2. Opaque finish paint in accordance with requirements of Section 099100.

3.0 EXECUTION

3.1 EXAMINATION

A. Examine substrates, with installer present, for compliance with requirements for installation tolerances and other conditions affecting installation and performance of finish carpentry. Do not proceed with installation until unsatisfactory conditions have been corrected.

3.2 PREPARATION

A. Clean substrates of projections and substances detrimental to application.

B. Prime and backprime lumber for painted finish. Comply with requirements for surface preparation and application in Section 099100.

3.3 INSTALLATION, GENERAL

A. Do not use finish carpentry materials that are unsound, warped, improperly treated or finished, inadequately seasoned, or too small to fabricate with proper jointing arrangements.

B. Install finish carpentry plumb, level, true, and aligned with adjacent materials. Use concealed shims where required for alignment

1. Scribe and cut finish carpentry to fit adjoining work. Refinish and seal cuts as recommended by manufacturer.

2. Countersink nails, fill surface flush, and sand where face nailing is unavoidable.

3. Install to tolerance of 1/8-inch in 96 inches for plumb and level. Install adjoining finish carpentry with 1/32-inch maximum offset for flush installation and 1/16-inch maximum offset for reveal installation.

4. Coordinate finish carpentry with materials and systems in or adjacent to standing and running trim and rails. Provide cutouts for mechanical and electrical items that penetrate exposed surfaces of trim and rails.

5. Align new materials with existing adjacent.

C. Finish Painting

1. Opaque: As specified in Section 099100.

2. Transparent: As specified in Section 064100.

3.4 STANDING AND RUNNING TRIM INSTALLATION

A. Install with minimum number of joints practical, using full-length pieces from maximum lengths of lumber available. Do not use pieces less than 24 inches long, except where necessary. Stagger joints in adjacent and related standing and running trim. Cope at returns and miter at comers to produce tight-fitting joints with full-surface contact throughout length of joint Use scarf joints for end-to-end joints. Plane backs of casings to provide uniform thickness across joints, if required.

1. Match color and grain pattern across joints.

2. Install trim after gypsum board joint finishing operations are completed.

3. Drill pilot holes in hardwood before fastening to prevent splitting. Fasten to prevent movement or warping. Countersink fastener heads on exposed carpentry work and fill holes.

4. Fit exterior joints to exclude water. Apply flat grain lumber with bark side exposed to weather.

B. Panel Installation

1. Install panels aligned and leveled. Provide pre-finished trim at all edges, comers and panel joints.

3.5 ADJUSTING

A. Repair damaged or defective finish carpentry where possible to eliminate functional or visual defects. Where not possible to repair, replace finish carpentry. Adjust joinery for uniform appearance.

END OF SECTION

SECTION 064100 – ARCHITECTURAL WOOD CASEWORK

1.0 GENERAL

1.1 SUMMARY

A. This Section includes all labor, materials, equipment, operations, or methods listed, mentioned or scheduled on plans and/or herein specified, including all incidentals necessary and required for completion of work under this Section.

1. Shop fabricated cabinetwork and countertops complete with hardware and accessories.

2. Furnish sign back panels for signs by signage contractor.

1.2 RELATED SECTIONS

A. Documents affecting work of this Section include, but are not necessarily limited to, General Conditions, Special Conditions and Division 1 of these Contract Documents.

B. Section 054500 - Metal Support Assemblies

C. Section 055000 - Metal Fabrications

D. Section 066116 - Solid Surfacing Fabrications.

E. Section 088100 – Glass and Glazing

F. Section 096500 - Resilient Flooring

G. Division 26 - Electrical

1.3 REFERENCES

A. ANSI - American National Standards Institute

B. BHMA - Builders Hardware Manufacturing Association

1. A156.9 - Cabinet Hardware.

C. NEMA - National Electric Manufacturers Association

1. LD3 - High Pressure Decorative Laminates.

D. U. S. Department of Commerce, National Institute of Standards and Technology

1. PS 1 - U. S. Product Standard for Construction and Industrial Plywood.

2. PS 20 - U. S. Product Standard for American Softwood Lumber Standard.

E. WI - Woodwork Institute

1. QS - Quality Standards.

1.4 SUBMITTALS

A. Product Data: Submit for all items.

B. Shop Drawings

1. Indicate dimensioned plans, sections, elevations, large scale details, location of each item, materials and wood species, component profiles, fastenings, jointing details, finishes, accessories, hardware location and schedule of finishes.

2. Follow WI standards for millwork shop drawings.

3. Coordinate scribes and fillers where Owner furnished appliances and equipment are installed in casework and counters.

C. Samples

1. Wood Items: Submit samples finished as specified.

a. Face Veneer for Flitch Selection: 3 Veneer leaves representative of flitch to be used.

b. Factory Finished Panels for Transparent finish: 3 veneer samples cut from selected flitch samples, laminated to panel product finished to match the Architect's samples, 12 inches by 12 inches each.

c. At least 1 sample of finished solid stock showing complete range of variations in grain, color, and other features, minimum 6 inches width by 18 inches.

d. Samples shall be resubmitted for acceptable stain and finish until approved by the Architect.

2. Other related items:

   a. Metal panel, 12 inches by 12 inches.

3. Plastic Laminate: 12 inches by 12 inches, each color and pattern.

4. Sample of each type of hardware proposed for use.

5. Sample of plexiglass including edge finish.

D. Certification: See Article 1.04, "Quality Assurance" for requirements.

1.5 QUALITY ASSURANCE

A. Qualifications

1. Manufacturer. Company specializing in manufacturing the products specified in this Section with minimum 5 years of experience.

B. Furnish and install cabinet work in accordance with the standards and details of premium grade according to the “Manual of Millwork", WI.

1. Before delivery to the job site, the supplier shall issue a WI Certified Compliance Certificate or Certificate of Reinspection indicating the products that will be furnished for this job and certifying that they will fully meet all the requirements of the grade or grades specified.

2. The shop drawings for the casework shall bear the WI Certified Compliance Label indicating that drawings fully meet the requirements of the WI grade specified.

3. Each unit of casework shall bear the WI Certified Compliance Label indicating that the cabinets fully meet the requirements of the WI grade specified.

4. Each countertop shall bear the WI Certified Compliance Label indicating the tops fully meet the requirements of the WI grade specified.

5. Issue WI certified compliance certificate for installation at completion of installation.

C. First-class quality of casework shall be established by use of proper machinery, tools, jigs, hardware and skilled workmanship. Fabricate veneer panels on stainless steel or chrome equipment Rust stains on panels will be cause for rejection.

1.6 DELIVERY, STORAGE, AND HANDLING

A. Acceptance at Site

1. Deliver, store and handle products to site under provisions of Division 1.

2. Deliver finish carpentry items to job site only after proper facilities are available for handling, sorting and protecting items; receiving areas are broom cleaned; and all plaster work is dry, mechanical and electrical rough-ins are completed.

1.7 PROJECT CONDITIONS

A. Field Measurements: Verify field measurements.

1.8 COORDINATION

A. Coordinate the work with plumbing and electrical rough-in.

2.0 PRODUCTS

2.1 MANUFACTURERS

A. Plywood Panels: SierraPine, 3010 Lava Ridge Court, Suite 220, Roseville, CA 95661, 1-916-772-3422, www.sierrapine.com, or approved equal.

B. Laminated Plastic:

1. Wilsonart International, 2400 Wilson Place, Temple, TX, 76503, 1-800-433-3222, www.wilsonart.com.

2.2 PLASTIC LAMINATED CABINETS

A. Fabricate cabinets in compliance with WI Section 15 plastic covered casework. Custom grade. Construction shall be Type II, Style ‘A’ frameless. Door and drawer front style shall be flush overlay.

B. Plastic Laminate

1. High pressure plastic laminate in accordance with NEMA LD-1 standards unless otherwise indicated.

a. Particleboard: Minimum density of 45 pounds per cubic foot; moisture content not to exceed 8 percent.

b. Exposed exterior surfaces shall be 0.030-inch minimum thickness high pressure plastic laminate.

c. Exposed edges of cabinets, drawers, and doors shall be edged with 3-mil PVC tape matching the plastic laminate facing plastic laminate.

d. Color: See schedule

2. Semi-exposed surfaces shall be laminated with light color high pressure plastic laminate cabinet liner 0.020-inch thickness except visible surfaces of open cabinets shall be 0.030-inch thick high pressure plastic laminate. Interior exposed shelf edges shall be self edged with PVC tape.

C. General Construction

1. Doors, shelves, bases, ends, and dividers shall be 3/4-inch thick.

2. All bases and framing members shall be doweled into end panels and secured with glue and screws.

3. Backs shall be rabbeted, set flush into end panels, and secured with screws.

4. Provide cutouts for plumbing fixtures, inserts, appliances, outlet boxes and other fittings. Verify location of cutouts from on-site dimensions.

D. Drawers

1. Drawer fronts shall be 3/4-inch plastic laminate on exposed face and plastic laminate cabinet liner on interior surfaces.

2. Drawer sides and backs shall be laminated on both sides with plastic laminate cabinet liner.

3. Drawer bottoms shall be fully housed into front, sides and back.

E. Shelves: Adjustable.

F. Fasteners: Size and type to suit application.

G. Hardware: Provide all hardware as shown and required per WI requirements of Supplement #1 of the WI Manual with the following stipulations:

1. Finish: US26D, Satin chrome.

2. Shelf Standards and Rests: Provide hold-down clips.

3. Drawer and Door Pulls: Wire pull design, 4 inch centers.

4. Catches: Manufacturer's option.

5. Drawer Slides: Full extension type, heavy duty.

6. Hinges: European style. Grade 1, semi-concealed, 270-degree opening.

7. Draw Bolts: As specified above.

8. Cabinet Locks: Recessed locks, 7/8 inch diameter, 3/4 inch length, National, Corbin or equal.

2.3 COUNTERTOPS

A. Solid Surface Countertop: As specified in Section 066116

B. Accessories

1. Grommets; Plastic countertop inserts with closure plugs in sizes and configurations as indicated.

2.4 FABRICATION

A. General

1. Perform corrective measures necessitated by non-conformance with WI standards. The Architect’s opinion shall govern regarding discrepancies.

2. Verify location, detail, and dimensions of electrical receptacles and switches to ensure proper fit and accurate alignment integral with casework and other items.

3. Coordinate details with other work supporting, adjoining, or fastening to casework and other items.

4. Shop fabricate and assemble work in complete units insofar as dimensions permit for shipment and installation.

5. Wood Moisture Content Comply with requirements of referenced quality standard for moisture content of lumber at time of fabrication

and for relative humidity conditions in the installation areas.

6. Fabricate paneling to dimensions, profiles and details indicated with openings pre-cut, where possible, to accommodate other items and work. Complete fabrication, assembly, finishing, and other work before shipment to project site to maximum extent possible. Disassemble components only as necessary for shipment and installation. Where necessary for fitting at site, provide ample allowance for scribing, trimming and fitting.

2.5 SCHEDULE

CASEWORK				
Ref. #	**Room/Location**	**Series**	**Color**	**Grain Orientation**
PL-1	#144 Program Room Base	Wilsonart Standard Laminate	D403-60 White Sand	TBD
Note: Verify location, type and size with drawings				
COUNTERTOPS - See section 066116 - Solid Surface Fabrications				
Note: Verify location, type and size with drawings				

3.0 EXECUTION

3.1 COORDINATION

A. Coordinate with requirements of equipment to be installed in casework.

3.2 CABINET INSTALLATION

A. Install in accordance with WI Section 26, premium grade, except as otherwise shown or specified.

B. Verify dimensions at site.

C. Set and secure cabinetwork items in place rigid, plumb, square and level.

D. Provide equal fillers where required for closure. Provide closures and back panels as required to finish a complete installation.

E. Permanently fix cabinet to floor and wall using appropriate anchorages.

F. Scribe cabinetwork which is against other building materials, leaving gaps of 1/16- inch maximum. Do not use additional overlay trim for this purpose. Use sealant of an approved color to seal any gaps.

G. Install and adjust cabinet hardware to ensure smooth and correct operation.

H. Installation shall be by same fabricator as casework.

3.3 COUNTERTOP

A. Run counter continuous over base cabinets, equipment and spaces as shown.

B. Provide splash at end where top is adjacent to wall or any equipment, fixed or movable, unless otherwise shown.

C. Scribe to wall or other adjacent materials leaving a gap of 1/16-inch minimum. Use sealant of an approved color to seal gaps.

D. Verify finish field dimensions.

3.4 SIGNAGE PANELS

A. Furnish panels as indicated on signage drawings. Fabricate and finish in accordance with requirements of this Section.

B. Final assembly and installation of signs is by others.

3.5 FINISHING

A. Grade: WI Premium Grade.

B. All architectural woodwork to be factory finished, field touch-up.

C. Finishing: Seal, sand and finish in accordance with recommendations of finish manufacturer.

3.6 CLEAN UP

A. Clean casework, counters, shelves, hardware, fittings and fixtures.

END OF SECTION

Division 7:
Thermal & Moisture Protection

SECTION 072116 - BLANKET INSULATION

1.0 GENERAL

1.1 SUMMARY

A. This Section includes all labor, materials, equipment, operations, or methods listed, mentioned or scheduled on the plans and/or herein specified, including all incidentals necessary and required for completion of work under this Section.

B. Provide and install building insulation as indicated on the project Drawings and as specified herein, including insulation of roof and ceiling areas, exterior walls and sound insulation of interior walls.

1.2 RELATED SECTIONS

A. Documents affecting work of this Section include, but are not necessarily limited to, General Conditions, Special Conditions and Division 1 of these Contract Documents.

B. Section 092900 - Gypsum Board

C. Section 095100 - Acoustical Ceilings

1.3 SUBMITTALS

A. Comply with provisions of Section 013300, Submittal Procedures.

1.4 DELIVERY, STORAGE AND HANDLING

A. Deliver materials to the site and store in a safe dry place with all labels intact and legible at time of installation.

B. Use all means necessary to protect insulating materials before, during and after installation and to protect the installed work and materials of other trades.

2.0 PRODUCTS

2.1 MANUFACTURER

A. Johns Manville, www.jm.com, 1-800-654-3103, or approved equal.

2.2 MATERIALS

A. General: Flame Spread for all insulation specified herein shall be 25. Smoke Developed shall be 50.

B. Sound Insulation:

1. Unfaced formaldehyde-free fiber glass sound control batt insulation:

a. R13 in interior walls, refer to drawings for locations

C. Thermal Insulation:

1. Kraft-faced formaldehyde-free fiber glass batt insulation with Tabs

a. R30 in all ceilings where indicated on drawings.

b. R22 in all exterior walls and where indicated on drawings.

3.0 EXECUTION

3.1 SURFACE CONDITIONS

A. Inspection:

1. Prior to all work of this Section, carefully inspect the installed work of all other trades and verify that all such work is complete to the point where this installation may properly commence.

2. Verify that building insulation may be installed in accordance with the original design and the manufacturer's recommendations.

B. Discrepancies:

1. In the event of discrepancy, immediately notify the Architect and District Representative.

2. Do not proceed with installation in areas of discrepancy until all such discrepancies have been fully resolved.

3.2 INSTALLATION

A. General:

1. Except as otherwise directed by the Architect, install all insulation in accordance with instructions of the manufacturer.

B. Inspection:

1. Upon completion of the installation, visually inspect each insulated area and verify that all insulation is complete and properly installed.

3.3 CLEAN UP

A. Upon completion, remove all debris resulting from work of this Section.

3.4 WARRANTY

A. Product delivered shall be free of defects.

END OF SECTION

SECTION 072200 – ROOF & DECK INSULATION

1.0 GENERAL

1.1 SUMMARY

A. This Section includes all labor, materials, equipment, operations, or methods listed, mentioned or scheduled on the plans and/or herein specified, including all incidentals necessary and required for completion of work under this Section.

B. Provide and install roof hatch as shown on project Drawings and as specified herein.

1.2 RELATED SECTIONS

A. Documents affecting work of this Section include, but are not necessarily limited to, General Conditions, Special Conditions and Division 1 of these Contract Documents.

B. Section 055000 - Metal Fabrications

C. Section 061000 - Rough Carpentry:

D. Section 075100 - Thermoplastic Polyolefin (TPO) Roofing Membrane

E. Section 076200 - Sheet Metal Flashing and Trim

F. Section 079000 - Sealant and Caulking

G. Section 099000 - Painting and Coating: For finish painting.

1.3 REFERENCES

A. ASTM - American Society for Testing and Materials

1. A446 - Standard Specification for Steel Sheet, Zinc-Coated (Galvanized) by the Hot-Dip Process, Structural (Physical) Quality.

2. A525 - Standard Specification For General Requirements for Steel Sheet, Zinc-Coated (Galvanized) by the Hot-Dip Process.

3. D4586 - Standard Specification for Asphalt Roof Cement, Asbestos Free.

B. NRCA - National Roofing Contractors Association

C. SMACNA - Sheet Metal and Air Conditioning Contractors National Association, Inc.

1.4 SUBMITTALS

A. Product Data: Submit manufacturer's product data for roof door. Submit manufacturer's detailed technical product data, installation instructions and recommendations, including details of construction relative to materials, dimensions of individual components, profiles, and finishes.

B. Shop Drawings: Submit shop drawings showing fabrication and installation of roof door, including fully dimensioned plans, elevations, sections, details of components and attachments to other units of Work. Also show layout, anchorage details, rough-in requirements and conditions on the roof or for other accessories.

1.5 QUALITY ASSURANCE

A Standards - Comply with the following:

1. SMACNA "Architectural Sheet Metal Manual" details for fabrication of units, including flanges and cap-flashing to coordinate with type of roofing indicated.

2. NRCA "Roofing and Waterproofing Manual" details for installation of units.

2.0 PRODUCTS

2.1 MANUFACTURERS

A. Acceptable Manufacturers: Bilco Co., "Type S-20"; Babcock-Davis; or Inryco/Milcor, or equal.

2.2 MATERIALS

A. Type: Single-leaf personnel access

1. For Ladder Access: 30 inches by 36 Inches,

B. Material: Structural Quality Galvanized Steel Sheet: ASTM A446 with G90 coating complying with ASTM A525, Grade C or to suit manufacturer's standards.

1. Cover and Curb: 14 gauge paint bond galvanized steel.

2. Liner: 22 gauge paint bond steel.

C. Insulation: Manufacturer’s standard rigid or semirigid glass-fiber board of 1 inch thickness.

D. Gaskets: Manufacturer’s standard tubular or fingered design of thermoplastic rubber.

E. Wood Nailers: As specified in Section 061000.

F. Fasteners: Same metal as metals being fastened, or nonmagnetic stainless steel or other noncorrosive metal as recommended by manufacturer. Match finish of exposed fasteners with finish of material being fastened.

G. Sealant: As specified in Section 079200.

H. Roofing Cement: ASTM D4586, nonasbestos, fibrated asphalt cement designed for trowel application or other adhesive compatible with roofing system.

2.3 ACCESSORIES

A. Safety Post

1. Manufactured of high strength steel with telescoping tubular section that locks automatically when fully extended. Upward and downward movement shall be controlled by stainless steel spring mechanism. Finish shall be black enamel.

2. Unit shall be completely assembled with fasteners for securing to the ladder rungs in accordance with manufacturer’s instructions.

3. Product: Bilco, “Ladder UP Safety Post", or equal.

2.4 FABRICATION

A. General: Fabricate roof door to withstand 40 Ib/sq. ft. external loading and 20 Ib/sq. ft. internal loading pressure. Frame with 12 inch high, integral-curb, double-wall construction with 1 inch insulation, cant strips and cap flashing (roofing counterflashing), with welded or sealed mechanical comer joints.

B. Provide double-wall cover (lid) construction with 1 inch insulation core.

C. Provide gasketing and equip corrosion-resistant or hot-dip galvanized hardware including pintle hinges, hold-open devices, interior padlock hasps and both

interior and exterior latch handles.

2.5 FINISHES

A. Prime Coat: Provide manufacturer's prime coat compatible with specified finish paint system.

B. Finish Painting: As specified in Section 099000.

3.0 EXECUTION

3.1 INSTALLATION

A. General: Comply with manufacturer's instructions and recommendations.

B. Anchor unit securely to supporting structural substrate, adequate to withstand lateral and thermal stresses, as well as inward and outward loading pressures.

1. Except as otherwise indicated, install roof accessory items according to construction details of NRCA "Roofing and Waterproofing Manual".

C. Isolation: Where metal surface of unit is to be installed in contact with incompatible metal or corrosive substrates, including wood, apply bituminous coating on concealed metal surfaces or provide other permanent separation.

D. Flange Seals: Unless otherwise indicated, set flanges of accessory units in a thick bed of roofing cement to form a seal.

E. Cap Flashing: Where cap flashing is required as component of accessory, install to provide adequate waterproof overlap with roofing or roof flashing (as counterflashing). Seal with thick bead of mastic sealant.

F. Test operable components. Clean and lubricate joints and hardware. Adjust for proper operation.

END OF SECTION

SECTION 072616 - BELOW-GRADE VAPOR BARRIER

1.0 GENERAL

1.1 SUMMARY

A. This Section includes all labor, materials, equipment, operations, or methods listed, mentioned or scheduled on the plans and/or herein specified, including all incidentals necessary and required for completion of work under this Section.

B. Provide and install below-grade vapor barrier where shown on the project Drawings and as specified herein in any location where there is new concrete.

1.2 RELATED SECTIONS

A. Documents affecting work of this section include, but are not necessarily limited to, General Conditions, Special Conditions and Division 1 of these Contract Documents.

B. Section 033000 - Cast-in-Place Concrete

1.3 REFERENCES

A. American Society for Testing & Materials (ASTM):

1. ASTM D1709-04: Impact Resistance of Plastic Film by the Free-Falling Dart Method.

2. ASTM E96-95: Water Vapor Transmission of Materials.

3. ASTM E154-99: Standard Test Method for Water Vapor Retarders Used in Contact with Earth Under Concrete Slabs, on Walls, or as Ground Cover.

4. ASTM E1745-97: Standard Specification for Water Vapor Retarders Used in Contact with Soil or Granular Fill Under Concrete Slab.

5. ASTM E631: Terminology of Building Constructions

6. ASTM E1643-98: Standard Practice for Installation of Water Vapor Retarders Used in Contact with Earth or Granular Fill Under Concrete Slabs.

7. ASTM F1249-90: Standard Test Method for Water Vapor Transmission Rate Through Plastic Film and Sheeting Using a Modulated Infrared Sensor.

8. ASTM D882-02: Tensile Properties of Thin Plastic Sheeting.

B. American Concrete Institute (ACI)

1. ACI302.1R-96 – Minimum Thickness (10-mils)

C. Soils report per Section 310513, Soils for Earthwork

1.4 SUBMITTALS

A. Comply with provisions of Section 013300, Submittal Procedures.

B. Submit manufacturer's product data for each material specified herein, including test reports or manufacturer's certificates indicating materials comply with specified requirements.

C. Submit sample of each material specified herein.

1.5 QUALITY ASSURANCE

A. Use adequate numbers of skilled workmen who are thoroughly trained and experienced in the necessary crafts and who are completely familiar with the specified requirements and the methods necessary for proper performance of the work of this Section.

B. Cooperate as required in performance of the specified testing and inspecting.

1.6 DELIVERY, STORAGE AND HANDLING

A. Comply with manufacturer's recommendations for storage and handling of product.

2.0 PRODUCT

2.1 MANUFACTURER

A. Stego Industries LLC, San Clemente, CA, Tel: 949-257-4100, Toll Free: 877-464-7834, Fax: 949-257-4113, www stegoindustries.com, or approved equal.

2.2 MATERIALS

A. Stego Wrap Vapor Barrier (underslab): multi-layer plastic extrusion with a proprietary formulation of prime, virgin, polyolefin resins - 15 Mil

1. Thickness: 15-mils

2. Roll Dimensions: 14 ft. x 140 ft.

3. Roll Weight: 140 lbs.

4. Permeance: 0.0084 perms, 0.0035 WVTR per ASTM F1249

B. Other Materials: Provide other materials not specifically described herein but required for a complete and proper installation, as selected by the Contractor and subject to the approval of the Architect and the manufacturer of underslab vapor retarder.

3.0 EXECUTION

3.1 EXAMINATION OF SURFACE CONDITIONS

A. Examine the areas and conditions under which work of this Section will be performed.

1. Correct conditions detrimental to timely and proper completion of the work.

2. Do not proceed until satisfactory conditions are corrected.

3.2 INSTALLATION

A. Comply with manufacturer's instructions and recommended methods of installation, and in accordance with procedures outlined in ASTM E1643.

B. After base for concrete has been leveled, compacted and tamped, install the vapor barrier over the base and compacted fill, with the longest dimension parallel to the direction of the pour of the concrete.

C. All joints should be lapped 6 inches and sealed with tape. Seal penetrations.

D. Screed pin(s) shall not be driven through vapor barrier.

E. All penetrations must be sealed using a combination of Stego Wrap, Stego Tape and/or Stego Mastic.

F. Product should be as clean and dry as possible before sealing with tape. Verify with manufacturer of underslab vapor barrier.

END OF SECTION

SECTION 075500 – HYBRID THERMOPLASTIC POLYOLEFIN (TPO) MEMBRANE ROOFING

1.0 GENERAL

1.1 SUMMARY

A. This Section includes all labor, material, equipment, operations, or methods listed, mentioned or scheduled on the plans and/or herein specified, including all incidentals necessary and required for completion of work under this Section.

B. Provide and install a hybrid TPO adhered membrane roofing system as shown on Drawings and as specified herein, including all related accessories.

1.2 RELATED SECTIONS

A. Documents affecting work of this Section include, but are not necessarily limited to, General Conditions, Special Conditions and Division 1 of these Contract Documents.

.

B. Section 061000 - Rough Carpentry

C. Division 7 - Thermal and Moisture Protection: All Sections.

1.3 REFERENCES

A. American Society for Testing and Materials (ASTM):

1. ASTM D751 – Standard Test Method for Coated Fabrics

2. ASTM D2137 – Standard Test Method for Rubber Property – Brittleness Point of Flexible Polymers and Coated Fabrics

3. ASTM E84 – Standard Test Method for Surface Burning Characteristics of Building Materials

4. ASTM E96 - Standard Test Methods for Water Vapor Transmission of Materials

5. ASTM D1204 - Standard Test Method for Linear Dimensional Changes of Nonrigid Thermoplastic Sheeting or Film at Elevated Temperature

6. ASTM D-471 - Standard Test Method for Rubber Property—Effect of Liquids

7. ASTM D-1149 - Standard Test Methods for Rubber Deterioration—Cracking in an Ozone Controlled Environment
8. ASTM C-1549 - Standard Test Method for Determination of Solar Reflectance Near Ambient Temperature Using a Portable Solar Reflectometer
9. ASTM C-1371 - Standard Test Method for Determination of Emittance of Materials Near Room Temperature Using Portable Emissometers
10. ASTM E 903 – Standard Test Method for Solar Absorptance, Reflectance, and Transmission of Materials Using Integrating Spheres
11. ASTM G155 - Standard Practice For Operating Xenon Arc Light Apparatus For Exposure Of Non-Metallic Materials
12. ASTM D573 - Standard Test Method For Rubber - Deterioration In An Air Oven

B. Underwriters Laboratories, Inc. (UL).

C. Sheet Metal and Air Conditioning Contractors' National Association (SMACNA).

D. National Roofing Contractors' Association (NRCA).

E. Factory Mutual Engineering and Research (FM).

F. Polyisocyanurate Insulation Manufacturers Association (PIMA).

G. Occupational Safety and Health Administration (OSHA).

H. Single Ply Roofing Industry (SPRI).

1.4 SUBMITTALS

A. Comply with provisions of Section 013300, Submittal Procedures.

B. General: Submit Shop Drawings, Product Data, Samples, and Quality Control Submittals specified below at the same time as one package.

1. All submittal packages must be submitted prior to the Pre-Installation conference.

C. Product Data: Submit Catalog sheets and installation instructions for each material specified.

D. Shop Drawings: When there is a proposed deviation from the Contract Documents, submit the revised detail labeled as such for approval. On the revised detail show existing conditions and referenced directly to the related details on the Drawings.

1. When applies submit an accurate layout of the tapered insulation, designed and provided by the membrane manufacturer, showing the slopes to the drains.

a. Show cross section drawings illustrating the location and thickness of tapered insulation pieces and filler pieces.

b. Show the thickness of the insulation system at high and low points.

c. Submit an accurate layout of the wood nailers showing their required locations, and required spacing between nailers. Show the direction of the laps in relation to the slope of the deck and the wood nailers.

E. Samples: All submitted samples must be labeled and supplied by manufacturer of materials.

1. Roofing Membrane: One each type

2. Fasteners: Three each type

F. Quality Control Submittals: if requested, Contractor shall provide the following Test Reports:

1. Roof drain and leader test or submit plumber's verification

2. Core cut

3. Roof flood test

G. Contract Closeout Submittals: provide the following at completion of work of this Section:

1. Final invoice for project

2. Close-out of any change orders

3. Final waivers of lien from all material suppliers and subcontractors

4. Completed punch list certification by Contractor and the District.

H. Warranty: Submit the roofing membrane manufacturer's warranty covering workmanship and materials that has been executed by authorized representative of roofing system manufacturer. See part 1.10 of this Section for Warranty requirements.

1.5 PERFORMANCE AND DESIGN REQUIREMENTS

A. General: Provide installed roofing membrane and base flashings that remain watertight; do not permit the passage of water; and resist specified uplift pressures, thermally induced movement, and exposure to weather without failure.

B. Material Compatibility: Provide roofing materials that are compatible with one another under conditions of service and application required, as demonstrated by roofing membrane manufacturer based on testing and field experience.

C. Jobsite Safety: Execute all operations and provide a safe work environment in accordance to OSHA standards and regulations. This requirement applies to all contractor personnel, associated subcontractors, workers in other trades, and jobsite visitors.

D. Roofing System Design: Provide a membrane roofing system that is identical to systems that have been successfully tested by a qualified testing and inspecting agency to resist uplift pressure calculated according to ASCE 7-02.

E. Exterior Fire Test Exposure: Provide a roofing systems achieving a UL Class A rating for roof slopes indicated.

F. UL Listing: Provide membrane roofing materials with the fire-test-response characteristics indicated as determined by testing identical products per test methods mandated by UL. Identify materials with appropriate markings of applicable testing and inspecting agency.

1.6 QUALITY ASSURANCE

A. Certifications:

1. General: Provide letter from the roofing membrane manufacturer certifying the proposed roofing assembly, compatibility of materials and total R-value of the insulation system.

2. Contractor's Certification:

a. Provide a letter from the membrane manufacturer certifying that the installer is classified, certified and approved to install the roof

system.

B. Contractor's Qualifications:

1. Roofing Firm Qualifications:

a. Installation of a minimum of ten roofs of comparable size, scope, and complexity as the roofing system specified in the Contract Documents, including all related sheet metal work, if applicable. (List last five such jobs within 50 miles of the job site, including address, type of system and number of plies, if applicable, square footage, date installed and District/agent with whom contracted).

1.7 PROJECT CONDITIONS

A. Weather Limitations: Proceed with installation only when existing and forecasted weather conditions permit roofing system to be installed according to Manufacturer's written instructions and guarantee requirements.

1. Do not start roofing if rain is imminent, or ambient temperature is below 45°F.

2. If rain occurs during roof membrane application, cease operations and protect deck, insulation, penetrations and membrane from water damage and intrusion.

1.8 DELIVERY, STORAGE AND HANDLING

A. Deliver roofing materials to site in manufacturer's unbroken containers bearing the manufacturer's printed labels. Unlabeled cartons or packages shall not be stored on site.

1. All materials that arrive on site must have the following information clearly displayed on packaging:

a. Manufacturer

b. Type (ASTM)

c. SP (Softening Point)

d. FP (Flash Point)

e. FBT (Finished Blowing Temperature)

f. EVT (Equiviscous Temperature)

B. Store materials a minimum of 6" off the ground, in a dry, well ventilated place protected from the weather.

1. Enclosed trailers are recommended.

2. Temperature conditioned storage is required for temperature sensitive items.

3. Mark for clear and evident identification all material that has been subject to moisture, and remove such damaged materials from site.

C. Handle roll goods with care.

1. Do not use roll goods which have been damaged.

2. Leave materials in their packaging until ready for use.

D. In event of damage, immediately make all repairs and replacements required by the District.

E. Disposal:

1. All removed materials become the property of the contractor.

2. Inspect ground areas surrounding roof on a daily basis for loose debris.

3. Immediately move all debris off roof and into approved dumpster.

4. Dumpster staging areas must be kept neat and tidy. Do not allow to overflow.

5. All debris must be transported to a legal dumpsite or recycling facility and documentation of each load must be maintained by the Contractor.

1.9 PRE-INSTALLATION CONFERENCE

A. Comply with provisions of Section 013119, Project Meetings.

B. Prior to commencement of roof deck construction, a pre-installation conference shall be conducted at Project Site. Those in attendance shall include the Architect, the Owner and Owner’s insurer (if applicable), Testing and Inspecting Agency Representative, Roofing Contractor and/or Installer, roofing system manufacturer's representative, deck installer, and installers whose work interfaces

with or affects roofing, including installers of roof accessories and roof-mounted equipment.

C. The following methods and procedures related to roof deck construction and roofing system installation shall be reviewed during the meeting:

1. Means, methods, and procedures related to roofing installation, including manufacturer's written instructions.
2. Project Safety Plan for site conditions, enforcement, compliance, or Owner imposed restrictions that may be required.
3. Finalization of construction schedule and verification of availability of materials, Installer's personnel, equipment, and facilities needed to make progress and avoid delays.
4. Examination of site for approved staging areas, disposal sites, and documentation of existing conditions prior to contractor mobilization. Establish scope of work for site restoration and responsibilities.
5. Examination of site for condition and completion of areas adjacent to work area. Establish protection required for existing surfaces.
6. Examination of deck substrate conditions and finishes for compliance with requirements, including flatness and fastening.
7. Structural loading limitations of roof deck during and after roofing operations.
8. Base flashings, special roofing details, roof drainage, roof penetrations, equipment curbs, and condition of other construction that will affect roofing system.
9. Governing regulations and requirements for insurance and certificates if applicable.
10. Temporary protection requirements for roofing system during and after installation.
11. Work limitation(s) by contractor including; start times, end times, days of the week, noise mitigation, fume control and any part of the work that would effect normal building operations.
12. Trade coordination necessary for job completion.
13. Roof observation and repair procedures after roofing installation.

1.10 WARRANTY

A. Provide manufacturer's twenty (20)–year standard roof system warranty issued by the manufacturer. Warranty shall run from date of Substantial Completion. Manufacturer shall have a minimum AAA credit rating.

1. Warranty shall indicate that manufacturer has reviewed Drawings, specifications and conditions affecting the work.

B. Roofing installer's warranty shall be signed by Installer and shall cover entire work of this Section, including all components of membrane roofing system for a period of two (2) years.

2.0 PRODUCTS

2.1 MANUFACTURERS

A. Garland Company, Inc., 3800 E. 91st, Cleveland, OH 44105; 831-324-335; www.garlandco.com, or approved equal.

B. Georgia-Pacific Building Products; 133 Peachtree Street, NE Atlanta, CA 30303; 1-800-225-6119; www.buildgp.com, or approved equal.

2.2 MATERIALS AND RELATED ROOFING COMPONENTS

A. Insulation: Tapered insulation as indicated in Section 072200 - Roof and Deck Insulation.

B. Roof Board: Fiber-reinforced gypsum panel with an integral water-resistant core.

1. Densdeck Prime

a. Board Thickness: 1/2"

b. Thermal Resistance (R value)of: 20

c. Adhesive: Insul-Lock HR

C. Base (Ply) Sheet: One ply bonded to the prepared substrate with Interply Adhesive:

1. Viking CIF-2HM Base Sheet (80 mil):

D. Thermoplastic Cap (Ply) Sheet: One ply bonded to the prepared substrate with

Interply Adhesive (2):

1. KEE-Stone FB 60:

E. Interply Adhesive: (1)

1. Green-Lock Membrane Adhesive.

F. Interply Adhesive: (2)

1. KEE-Lock Foam

G. Flashing Base Ply: One ply bonded to the prepared substrate with Flashing Ply Adhesive:

1. VersiPly 40:

H. Flashing Cap (Ply) Sheet: One ply bonded to the prepared substrate with Flashing Ply Adhesive:

1. KEE-Stone FB 60 Flashing.

I. Flashing Ply Adhesive (2):

1. KEE-Lock Foam

2.3 ACCESSORIES

A. Roof Insulation: In accordance with Section 072200.

B. Nails and Fasteners: Non-ferrous metal or galvanized steel, except that hard copper nails shall be used with copper; aluminum or stainless steel nails shall be used with aluminum; and stainless steel nails shall be used with stainless steel, Fasteners shall be self-clinching type of penetrating type as recommended by the deck manufacturer. Fasten nails and fasteners flush-driven through flat metal discs not less than 1 inch (25 mm) diameter. Omit metal discs when one-piece composite nails or fasteners with heads not less than 1 inch (25 mm) diameter are used.

C. Walkway Pads - Commercial Innovations Walkway Pads: As recommended and furnished by the membrane manufacturer set in approved adhesive to control foot traffic on roof top surface and provide a durable system compliant non-slip walkway.

D. Sealant - Green-Lock Structural Adhesive: Single component, 100% solids structural adhesive as furnished and recommended by the membrane manufacturer.

1. Elongation, ASTM D 412: 300%

2. Hardness, Shore A, ASTM C 920: 50

3. Shear Strength, ASTM D 1002: 300 psi

E. Butyl Tape: 100% solids, asbestos free and compressive tape designed to seal as recommended and furnished by the membrane manufacturer.

F. Glass Fiber Cant - Glass Cant: Continuous triangular cross Section made of inorganic fibrous glass used as a cant strip as recommended and furnished by the membrane manufacturer.

2.4 EDGE TREATMENT AND ROOF PENETRATION FLASHINGS

A. Pre-Manufactured Coping Cap: R-Mer Edge Coping Cap Cover and Splice Plate.

1. Zinc-coated steel, ASTM A653, coating designation G-90, in thickness of 24 gauge, 22 gauge or 20 gauge, 36" to 48" by coil length, chemically treated, commercial or lock-forming quality.

2. Aluminum, ASTM B209, alloy 3105-H14, in thickness of .040" nom. or .050" nom. or .063" nom

B. Pre-Manufactured Coping Cap: R-Mer Edge Coping Chairs

1. Zinc-coated steel, ASTM A653, coating designation G-90, in thickness of 0.0635 nom./ 16 gauge, 36" to 48" by coil length, chemically treated, commercial or lock-forming quality.

C. Pre-Manufactured Edge Metal Finishes:

1. Exposed and unexposed surfaces for mill finish flashing, fascia, and coping cap, as shipped from the mill

2. Exposed surfaces for coated panels:

a. Steel Finishes: fluorocarbon finish. Epoxy primer baked both sides, .2-.25 mils thickness as approved by finish coat manufacturer.
Weathering finish as referred by National Coil Coaters Association (NCCA). Provided with the following properties.

1) Pencil Hardness: ASTM D3363, HB-H / NCCA II-2.
2) Bend: ASTM D-4145, O-T / NCCA II-19

3) Cross-Hatch Adhesion: ASTM D3359, no loss of adhesion
4) Gloss (60 deg. angle): ASTM D523, 25+/-5%
5) Reverse Bend: ASTM D2794, no cracking or loss of adhesion
6) Nominal Thickness: ASTM D1005
   a) Primer: 0.2 mils
   b) Topcoat, 0.7 mils min
   c) Clear Coat (optional, only used with 22 ga. steel) 0.3 mils
7) Color: To be selected by Architect from Manufacturers standard colors

D. Manufactured Flashing Ply: R-MER Ply galvalume steel and modified membrane roof termination/flashing system comprised of a flexible, tie-in membrane, factory-bonded within a watertight, mechanical seal to a galvalume steel vertical flashing or fascia reveal profile. Siliconized modified polyester, epoxy primer baked both sides. Modified membrane is a 180 mil, Styrene-Butadiene-Styrene SBS (Styrene-Butadiene-Styrene) rubber modified membrane reinforced with a dual fiberglass scrim.

1. Tensile Strength, ASTM D 5, 147

   a. 2 in/min. @ 73.4 +/- 3.6 deg. F MD 210 lbf/in CMD 210 lbf/in
   b. 50 mm/min. @ 23 +/- 3 deg. C MD 36.75 kN/m CMD 36.75 kN/m

2. Tear Strength, ASTM D 5147

   a. 2 in/min. @ 73.4 +/- 3.6 deg. F MD 250 lbf CMD 250 lbf
   b. 50 mm/min. @ 23 +/- 3 deg. C MD 1112 N CMD 1112 N

3. Elongation at Maximum Tensile, ASTM D5147

   a. 2 in/min. @ 73.4 +/- 3.6 deg. F MD 6.0% CMD 6.0%
   b. 50 mm/min. @ 23 +/- 3 deg. C MD 6.0% CMD 6.0%

4. Low Temperature Flexibility, ASTM D5147: Passes -30 deg. F (-34 deg. C)

5. Coating Properties:

   a. PencilHardness, NCCA II-2 - ASTM D3363, F-H
   b. Bend, NCCA II-19, ASTM D 4145, 2-T
   c. Adhesion / Cross-Hatch, ASTM D3359, no loss of adhesion
   d. Gloss (60 deg. angle), ASTM D 523, 90 +/- 5%
   e. Reverse Impact, ASTM D 2794no cracking or loss of adhesion

f. Nominal Thickness, ASTM D 1005, primer and topcoat 1.0 mils.

E. Flashing Boot - Rubbertite Flashing Boot: Neoprene pipe boot for sealing single or multiple pipe penetrations adhered in approved adhesives as recommended and furnished by the membrane manufacturer.

F. Vents and Breathers: Heavy gauge aluminum and fully insulated vent that allows moisture and air to escape but not enter the roof system as recommended and furnished by the membrane manufacturer.

G. Drain Flashings should be 4lb (1.8kg) sheet lead formed and rolled.

H. Plumbing stacks should be 4lb (1.8kg) sheet lead formed and rolled.

I. Liquid Flashing - Tuff-Flash: An asphaltic-polyurethane, low odor, liquid flashing material designed for specialized details unable to be waterproofed with typical modified membrane flashings.

1. Tensile Strength, ASTM D 412: 400 psi

2. Elongation, ASTM D 412: 300%

3. Density @77 deg. F 8.5 lb/gal typical

J. Fabricated Flashings: Fabricated flashings and trim are specified in Section 076000.

1. Fabricated flashings and trim shall conform to the detail requirements of SMACNA "Architectural Sheet Metal Manual" and/or the CDA Copper Development Association "Copper in Architecture - Handbook" as applicable.

K. Manufactured Roof Specialties: Shop fabricated copings, fascia, gravel stops, control joints, expansion joints, joint covers and related flashings and trim are specified in Section 07710.

1. Manufactured roof specialties shall conform to the detail requirements of SMACNA "Architectural Sheet Metal Manual" and/or the NRCA "Roofing and Waterproofing Manual" as applicable.

3.0 EXECUTION

3.1 EXAMINATION

A. Verify that work of other trades which penetrate the roof deck or require personnel and equipment to traverse the roof deck have been completed.

B. Examine surfaces for inadequate anchorage, foreign material, moisture, and unevenness that would prevent the execution and quality of application and roofing system as specified.

1. Do not proceed with application of roofing system until defects are corrected.

3.2 PREPARATION

A. General: Clean surfaces thoroughly prior to installation.

1. Prepare surfaces using the methods recommended by the manufacturer for achieving the best result for the substrate under the project conditions.

2. Fill substrate surface voids that are greater than 1/4 inch wide with an acceptable fill material.

3. Roof surface to receive roofing system shall be smooth, clean, free from loose gravel, dirt and debris, dry and structurally sound.

4. Wherever necessary, all surfaces to receive roofing materials shall be power broom and vacuumed to remove debris and loose matter prior to starting work.

5. Do not apply roofing during inclement weather. Do not apply roofing membrane to damp, frozen, dirty, or dusty surfaces.

6. Fasteners and plates for fastening components mechanically to the substrate shall provide a minimum pull-out capacity of 300 lbs. (136 k) per fastener. Base or ply sheets attached with cap nails require a minimum pullout capacity of 40 lb. per nail.

7. Prime decks where required, in accordance with requirements and recommendations of the primer and deck manufacturer.

B. Wood Deck:

1. Dimensional wood deck shall be minimum 1 inch (25 mm) thick, knotholes and cracks larger than 1/4 inch shall be covered with sheet metal. All boards shall be appropriately nailed and have adequate end bearing to the centers of beams/rafters. Lumber shall be kiln dried.

2. Plywood shall be a minimum 15/32 inch (11.9 mm) thick and conform to the standards and installation requirements of the American Plywood Association (APA).

3. If no roof insulation is specified, provide a suitable dry sheathing paper, followed by an approved base sheet nailed appropriately for the specified roof system, with 1 inch (25 mm) diameter caps and annular nails unless otherwise required by the applicable Code or Approval agency.

4. Insulation is to be mechanically attached in accordance with the insulation manufacturer's recommendations unless otherwise required by the applicable Code.

5. In all retrofit roof applications, it is required that deck be inspected for defects. Any defects are to be corrected per the deck manufacturer's recommendations and standards of the APA/Engineered Wood Association prior to new roof application.

6. Light metal wall ties or other structural metal exposed on top of the wood deck shall be covered with one ply of a heavy roofing sheet, such as HPR Glasbase Base Sheet, extending 2 inches to 6 inches (51 mm to 152 mm) beyond the metal in all directions. Nail in place before applying the base ply.

3.3 INSTALLATION - GENERAL

A. Install modified bitumen membranes and flashings in accordance with manufacturer's instructions and with the recommendations provided by the National Roofing Contractors Association's Roofing & Waterproofing Manual, the Asphalt Roofing Manufacturers Association, and applicable codes.

B. General: Avoid installation of modified bitumen membranes at temperatures lower than 40-45 degrees F. When work at such temperatures unavoidable use the following precautions:

1. Take extra care during cold weather installation and when ambient temperatures are affected by wind or humidity, to ensure adequate bonding is achieved between the surfaces to be joined. Use extra care at material seam welds and where adhesion of the applied product to the appropriately prepared substrate as the substrate can be affected by such temperature constraints as well.

2. Unrolling of cold materials, under low ambient conditions must be avoided to prevent the likelihood of unnecessary stress cracking. Rolls must be at least 40 degrees F at the time of application. If the membrane roll becomes stiff or difficult to install, it must be replaced with roll from a heated storage area.

C. Commence installation of the roofing system at the lowest point of the roof (or roof area), working up the slope toward the highest point. Lap sheets shingle fashion so as to constantly shed water

D. All slopes greater than 2:12 require back-nailing to prevent slippage of the ply sheets. Use ring or spiral-shank 1 inch cap nails, or screws and plates at a rate of 1 fastener per ply (including the membrane) at each insulation stop. Place insulation stops at 16 ft o.c. for slopes less than 3:12 and 4 feet o.c. for slopes greater than 3:12. On non-insulated systems, nail each ply directly into the deck at the rate specified above. When slope exceeds 2:12, install all plies parallel to the slope (strapping) to facilitate backnailing. Install 4 additional fasteners at the upper edge of the membrane when strapping the plies.

3.4 INSTALLATION COLD APPLIED ROOF SYSTEM

A. Base Ply: Cut base ply sheets into 18 foot lengths and allow plies to relax before installing. Install base sheet in Interply Adhesive: applied at the rate required by the manufacturer. Shingle base sheets uniformly to achieve one ply throughout over the prepared substrate. Shingle in proper direction to shed water on each large area of roofing.

1. Lap ply sheet ends 8 inches. Stagger end laps 12 inches minimum.

2. Solidly bond to the substrate and adjacent ply with specified cold adhesive at the rate of 2 to 2-1/2 gallons per 100 square feet.

3. Roll must push a puddle of adhesive in front of it with adhesive slightly visible at all side laps. Use care to eliminate air entrapment under the membrane.

4. Install subsequent rolls of modified across the roof as above with a minimum of 4 inch side laps and 8 inch staggered end laps. Lay modified membrane in the same direction as the underlayers but the laps shall not coincide with the laps of the base layers.

5. Extend plies 2 inches beyond top edges of cants at wall and projection bases.

6. Install base flashing ply to all perimeter and projection details.

7. Allow the one ply of base sheet to cure at least 30 minutes before installing the modified membrane. However, the modified membrane must be installed the same day as the base plies.

B. Thermoplastic Cap Ply: Allow plies to relax before installing. Install in interplay adhesive applied at the rate required by the manufacturer. Shingle sheets uniformly over the prepared substrate to achieve the number of plies specified. Shingle in proper direction to shed water on each large area of roofing.

1. All field seams exceeding 10 feet in length shall be welded with an approved

automatic welder.

2. All field seams must be clean and dry prior to initiating any field welding. Remove foreign materials from the seams (dirt, oils, etc.) with acetone or authorized alternative. Use CLEAN WHITE COTTON cloths and allow approximately five minutes for solvents to dissipate before initiating the automatic welder. Do not use denim or synthetic rags for cleaning.

3. Contaminated areas within a membrane seam will inhibit proper welding and will require a membrane patch or strip.

4. All welding shall be performed only by qualified personnel to ensure the quality and continuity of the weld. The lap or seam area of the membrane may be intermittently tack welded to hold the membrane in place.

5. The back interior edge of the membrane shall be welded first, with a thin, continuous weld to concentrate heat along the exterior edge of the lap during the final welding pass.

6. Follow local code requirements for electric supply, grounding and surge protection. The use of a dedicated, portable generator is highly recommended to ensure a consistent electrical supply, without fluctuations that can interfere with weld consistency.

7. Properly welded seams shall utilize a 1.5 inch wide nozzle, to create a homogeneous weld, a minimum of 1.5 inches in width.

C. Fibrous Cant Strips: Provide non-combustible perlite or glass fiber cant strips at all wall/curb detail treatments where angle changes are greater than 45 degrees. Cant may be set in approved cold adhesives, hot asphalt or mechanically attached with approved plates and fasteners.

D. Wood Blocking, Nailers and Cant Strips: Provide wood blocking, nailers and cant strips as specified in Section 06114.

1. Provide nailers at all roof perimeters and penetrations for fastening membrane flashings and sheet metal components.

2. Wood nailers should match the height of any insulation, providing a smooth and even transition between flashing and insulation areas.

3. Nailer lengths should be spaced with a minimum 1/8 inch gap for expansion and contraction between each length or change of direction.

4. Nailers and flashings should be fastened in accordance with Factory Mutual "Loss Prevention Data Sheet 1- 49, Perimeter Flashing" and be designed to be

capable of resisting a minimum force of 200 lbs/lineal foot in any direction.

E. Metal Work: Provide metal flashings, counter flashings, parapet coping caps and thru-wall flashings as specified in Section 07620 or Section 07710. Install in accordance with the SMACNA "Architectural Sheet Metal Manual" or the NRCA Roofing Waterproofing manual.

F. Termination Bar: Provide a metal termination bar or approved top edge securement at the terminus of all flashing sheets at walls and curbs. Fasten the bar a minimum of 8 inches (203 mm) o/c to achieve constant compression. Provide suitable, sealant at the top edge if required.

G. Flashing Base Ply: Install flashing sheets by the same application method used for the base ply.

1. Seal curb, wall and parapet flashings with an application of mastic and mesh on a daily basis. Do not permit conditions to exist that will allow moisture to enter behind, around or under the roof or flashing membrane.

2. Prepare all walls, penetrations, expansion joints and where shown on the Drawings to be flashed with required primer at the rate of 100 square feet per gallon. Allow primer to dry tack free.

3. Adhere to the underlying base ply with specified flashing ply adhesive unless otherwise specified. Nail off at a minimum of 8 inches (203 mm) o.c. from the finished roof at all vertical surfaces.

4. Solidly adhere the entire flashing ply to the substrate. Secure the tops of all flashings that are not run up and over curb through termination bar fastened at 6 inches (152 mm) O.C. and sealed at top.

5. Seal all vertical laps of flashing ply with a three-course application of trowel-grade mastic and fiberglass mesh.

6. Coordinate counter flashing, cap flashings, expansion joints and similar work with modified bitumen roofing work as specified.

7. Coordinate roof accessories, miscellaneous sheet metal accessory items, including piping vents and other devices with the roofing system work.

8. Secure the top edge of the flashing sheet using a termination bar only when the wall surface above is waterproofed, or nailed 4 inches on center and covered with an acceptable counter flashing.

H. Flashing Cap Ply:

1. Seal curb, wall and parapet flashings with an application of mastic and mesh on a daily basis. Do not permit conditions to exist that will allow moisture to enter behind, around or under the roof or flashing membrane.

2. Prepare all walls, penetrations, expansion joints and where shown on the Drawings to be flashed with required primer at the rate of 100 square feet per gallon. Allow primer to dry tack free.

3. Adhere to the underlying base flashing ply with specified flashing ply adhesive unless otherwise specified. Nail off at a minimum of 8 inches (203 mm) o.c. from the finished roof at all vertical surfaces.

4. Coordinate counter flashing, cap flashings, expansion joints and similar work with modified bitumen roofing work as specified.

5. Coordinate roof accessories, miscellaneous sheet metal accessory items with the roofing system work.

6. All stripping shall be installed prior to flashing cap sheet installation.

7. Heat and scrape granules when welding or adhering at cut areas and seams to granular surfaces at all flashings.

8. Secure the top edge of the flashing sheet using a termination bar only when the wall surface above is waterproofed, or nailed 4 inches on center and covered with an acceptable counter flashing.

I. Roof Walkways: Provide walkways in areas indicated on the Drawings.

3.5 INSTALLATION EDGE TREATMENT AND ROOF PENETRATION FLASHING

A. Pre-manufactured Snap-On Coping Cap:

1. Install miters first.

2. Position base flashing ply over the wall edge covering nailers completely, fastening 8 inches on center. Install base ply and thermoplastic cap ply with proper material and procedure according to manufacturer's recommendations.

3. Install minimum 16 gauge, 16 inch long by specified width anchor chairs installed per manufacturer's recommendation.

4. Install 6 inch wide splice plate by centering over 16 inch long by specified width anchor chair. Apply two beads of sealant to either side of the splice plate's center. Approximately 2 inches from the coping cap joint. Install Coping Cap by hooking outside hem of coping on outside face of anchor chair.

Press downward on inside edge of coping until "snap" occurs and hem is engaged on the entire chair.

B. Surface Mounted Counterflashing:

1. Minimum flashing height is 8 inches (203 mm) above finished roof height. Maximum flashing height is 24 inches (609 mm). Prime vertical wall and allow to dry.

2. Set cant in bitumen. Run all base field plies over cant a minimum of 2 inches (50 mm).

3. Install base flashing ply covering wall set in bitumen with 6 inches (152 mm) on to the base field ply and set in bitumen.

4. Then install thermoplastic cap field ply run over the base flashing ply in bitumen or foam adhesive.

5. Install the thermoplastic flashing ply in bitumen or foam over the base flashing ply, 9 inches (228 mm) on to the field of the roof.

6. Apply butyl tape to wall behind flashing. Secure termination bar through flashing, butyl tape and into wall. Alternatively use caulk to replace the butyl tape.
7. Secure counterflashing set on butyl tape above flashing at 8 inches (203 mm) o.c. and caulk top of counterflashing.

C. Expansion Joint:

1. Minimum curb height is 8 inches (203 mm) above finished roof height. Chamfer top of curb. Prime vertical curb and allow to dry.

2. Mechanically attach wood cant to expansion joint nailers. Run all base field plies over cant a minimum of 2 inches (50 mm).

3. Install compressible insulation in neoprene cradle.

4. Install base flashing ply covering curb set in bitumen with 6 inches (152 mm) on to field of the roof.

5. Then install thermoplastic cap field ply run over the base flashing ply in bitumen or foam adhesive.

6. Install the thermoplastic flashing ply in bitumen or foam over the base flashing ply, 9 inches (228 mm) on to the field of the roof.

7. Install pre-manufactured expansion joint cover. Fasten sides at 12 inches (609 mm) o.c. with fasteners and neoprene washers. Furnish all joint cover laps with butyl tape between metal covers.

D. Equipment Support:

1. Minimum curb height is 8 inches (203 mm) above finished roof height. Prime vertical and allow to dry.

2. Set cant in bitumen. Run all base field plies over cant a minimum of 2 inches (50 mm).

3. Install base flashing ply covering the curb set in bitumen with 6 inches (152 mm) on to the base field ply and set in bitumen.

4. Then install thermoplastic cap field ply run over the base flashing ply in bitumen or foam adhesive.

5. Install the thermoplastic flashing ply in bitumen or foam over the base flashing ply, 9 inches (228 mm) on to the field of the roof.

6. Install pre-manufactured cover. Fasten sides at 24 inches (609 mm) o.c. with fasteners and neoprene washers. Furnish all joint cover laps with butyl tape between metal covers.

7. Set equipment on neoprene pad and fasten as required by equipment manufacturer.

E. Curb Detail/Air Handling Station:

1. Minimum curb height is 8 inches (203 mm) above finished roof height. Prime vertical and allow to dry.

2. Set cant in bitumen. Run all base field plies over cant a minimum of 2 inches (50 mm).

3. Install base flashing ply covering the curb set in bitumen with 6 inches (152 mm) on to the base field ply and set in bitumen.

4. Then install thermoplastic cap field ply run over the base flashing ply in bitumen or foam adhesive.

5. Install the thermoplastic flashing ply in bitumen or foam over the base flashing ply, 9 inches (228 mm) on to the field of the roof.

6. Install pre-manufactured counterflashing with fasteners and neoprene washers

or per manufacturer's recommendations.

7. Set equipment on neoprene pad and fasten as required by equipment manufacturer.

F. Roof Drain:

1. Plug drain to prevent debris from entering plumbing.

2. Taper insulation to drain minimum of 24 inches (609 mm) from center of drain.

3. Run roof system base plies over drain. Cut out plies inside drain bowl.

4. Set lead/copper flashing (30 inch square minimum) in 1/4 inch bed of mastic.

5. Run lead/copper into drain a minimum of 2 inches (50 mm). Prime lead/copper and allow to dry.

6. Install base flashing ply (40 inch square minimum) in bitumen.

7. Install thermoplastic cap ply (48 inch square minimum) in bitumen or foam adhesive.

8. Install clamping ring and assure that all plies are under the clamping ring.

9. Remove drain plug and install strainer.

3.6 CLEANING

A. Clean-up and remove daily from the site all wrappings, empty containers, paper, loose particles and other debris resulting from these operations.

B. Remove asphalt markings from finished surfaces.

C. Repair or replace defaced or disfigured finishes caused by Work of this section.

3.7 PROTECTION

A. Provide traffic ways, erect barriers, fences, guards, rails, enclosures, chutes and the like to protect personnel, roofs and structures, vehicles and utilities.

B. Protect exposed surfaces of finished walls with tarps to prevent damage.

C. Plywood for traffic ways required for material movement over existing roofs shall be not less than 5/8 inch (16 mm) thick.

D. In addition to the plywood listed above, an underlayment of minimum 1/2 inch

(13 mm) recover board is required on new roofing.

E. Special permission shall be obtained from the Manufacturer before any traffic shall be permitted over new roofing.

3.8 FIELD QUALITY CONTROL

A. Test Strip (if requested by the Architect and/or the City):

1. When and where directed by the Architect and/or City, and before surfacing is applied to the completed membrane:

a. Cut a strip 3” wide by 40” long thru all plies of the roofing system. Number of such test strips may be as required.

b. After removal of the strip, immediately repair the area.

i) Lap each edge 12” and each succeeding ply lapping the preceding ply by at least 3” on all edges.

c. Approximate quantities of components within roofing membrane will be determined according to ASTM D3617.

2. Turn the test strips over to the City’s Representative for examination.

a. If the test strips indicate the roofing system complies with the specifications, the City shall bear the cost of the test strip work.

b. If the strips indicate the roofing system does not comply with the Specifications, the Contractor shall bear the cost of the test strip work, and shall repair or replace all roofing work as required to comply with the Specifications, at the Contractor’s expense.

B. Non-Compliance:

1. Failure of the membrane samples or the test strip samples to meet the Specification requirements will be cause for rejection of the Work.

3.9 INSPECTION

A. After all roofing system work is completed, provide an inspection by the roofing system manufacturer's representative. Representative must be employed expressly as a technical employee and not concurrently function in a sales role. Provide, via the representative, documentation verifying that roofing system has been installed according to the Specifications.

3.10 CLEAN UP

A. Keep newly installed roofing membrane clean and new in appearance under the assumption that all areas of roofing are aesthetically essential. Contractor may be directed to remedy – and if no remedy available – replace, newly roofed areas that are not maintained as such during the balance of installation.

B. Restore all other building surfaces and areas affected by roofing application to same condition of aforementioned on day of job start.

C. Remove all debris from roof and staging areas.

3.11 SCHEDULES

A. Base (Ply) Sheet:

1. Viking CIF-2HM Base Sheet (80 mil): 80 mil SBS (Styrene-Butadiene-Styrene) rubber modified roofing membrane reinforced with a fiberglass scrim, performance requirements according to ASTM D 5147.

   a. Tensile Strength, ASTM D 5147
      1) 2 in/min. @ 73.4 +/- 3.6 deg. F MD 50 lbf/in XD 50 lbf/in
      2) 50mm/min. @ 23 +/- 2 deg. C MD 8.75 kN/m XD 8.75 kN/m
   b. Tear Strength, ASTM D 5147
      1) 2 in/min. @ 73.4 +/- 3.6 deg. F MD 100 lbf XD 100 lbf
      2) 50mm/min. @ 23 +/- 2 deg. C MD 444.8 N XD 444.8 N
   c. Elongation at Maximum Tensile, ASTM D 5147
      1) 2 in/min. @ 73.4 +/- 3.6 deg. F MD 2.0 % XD 2.0 %
      2) 50mm/min@ 23 +/- 2 deg. C MD 2.0 % XD 2.0 %
   d. Low Temperature Flexibility, ASTM D 5147, Passes -20 deg. F (-28.8 deg. C)

B. Thermoplastic/Modified Cap (Ply) Sheet:

1. KEE-Stone FB 60: 60 mil thermoplastic, ketone ethylene ester (KEE) roofing membrane with polyester scrim. ASTM D6754

   a. Breaking Strength, ASTM D 751, Proc. B, strip
      1) 375 lbf. (1,668 N)
   b. Tear Strength ASTM D 751
      1) 120 lbf. min. (534 N)
   c. Elongation at Break (%), ASTM D 751, Proc. B, Strip
      1) 40.0%

C. Interply Adhesive:

1. Green-Lock Membrane Adhesive: Cold applied solvent free membrane adhesive: zero V.O.C. compliant performance requirements:

    a. Non-Volatile Content ASTM D 4586 100%
    b. Density ASTM D 1475 11.4 lbs./gal. (1.36 g/m3)
    c. Viscosity Brookfield 20,000-50,000 cPs.
    d. Flash Point ASTM D 93 400 deg. F min. (232 deg. C)
    e. Slope: up to 3:12

2. KEE-Lock Foam: Dual component, single bead (ribbon applied) urethane insulation/membrane adhesive.

    a. Tensile Strength (ASTM D 412) 250 psi
    b. Density (ASTM D 1875) 8.5 lbs./gal.
    c. Viscosity (ASTM D 2556) 22,000 - 60,000 cP
    d. Peel Strength (ASTM D 903) 17 lb./in.
    e. Flexibility (ASTM D 816) Pass @ -70deg. F (-56.7deg. C)

D. Flashing Base Ply:

1. VersiPly 40: 40 mil SBS (Styrene-Butadiene-Styrene) rubber modified roofing base sheet with dual fiberglass reinforced scrim.

    a. Tensile Strength, ASTM D 5147
        1) 2 in/min. @ 73.4 +/- 3.6 deg. F MD 215 lbf/in XD 215 lbf/in
        2) 50 mm/min. @ 23 +/- 2 deg. C MD 37.5 kN/m XD 37.5 kN/m
    b. Tear Strength, ASTM D 5147
        1) 2 in/min. @ 73.4 +/- 3.6 deg. F MD 275 lbf XD 275 lbf
        2) 50 mm/min. @ 23 +/- 2 deg. C MD 1223 N XD 1223 N
    c. Elongation at Maximum Tensile, ASTM D 5147
        1) 2 in/min. @ 73.4 +/- 3.6 deg. F MD 4.5% XD 4.5%
        2) 50 mm/min. @ 23 +/- 2 deg. C MD 4.5% XD 4.5%
    d. Low Temperature Flexibility, ASTM D 5147
        1) Passes -30 deg. F (-34 deg. C). Meets or Exceeds ASTM D 4601 Type II Performance Criteria.

E. Flashing Ply Adhesive:

1. KEE-Lock Foam: Dual component, single bead (ribbon applied) urethane insulation/membrane adhesive.

    a. Tensile Strength (ASTM D 412) 250 psi
    b. Density (ASTM D 1875) 8.5 lbs./gal.
    c. Viscosity (ASTM D 2556) 22,000 - 60,000 cP
    d. Peel Strength (ASTM D 903) 17 lb./in.
    e. Flexibility (ASTM D 816) Pass @ -70deg. F (-56.7deg. C)

F. Surfacing:

1. Flashing Cap (Ply) Sheet:

a. KEE-Stone FB 60 Flashing: 60 mil thermoplastic, ketone ethylene ester (KEE) roofing membrane with polyester scrim. ASTM D 6754.

1) Breaking Strength, ASTM D 751, Proc. B, strip
   a) 378 lbf
2) Tear Strength ASTM D 751
   a) 120 lbf. minumum.
3) Elongation at Break (%), ASTM D 751, Proc. B, Strip
   a) 40.0%

END OF SECTION

SECTION 076000 - FLASHING AND SHEET METAL

1.0 GENERAL

1.1 SUMMARY

A. This Section includes all labor, materials, equipment, operations, or methods listed, mentioned or scheduled on the plans and/or herein specified, including all incidentals necessary and required for completion of work under this Section.

B. Provide and install all sheet metal and all flashing, including items not specifically described in other Sections but required to prevent the penetration of water through the exterior shell of the building as shown on project Drawings, including:

1. Roof penetrations

2. Window and door flashing

1.2 RELATED SECTIONS

A. Documents affecting work of this Section include, but are not necessarily limited to, General Conditions, Special Conditions and Division 1 of these Contract Documents.

B. Division 7 - Thermal and Moisture Protection: All Sections

C. Section 092900 - Gypsum Board

D. Section 099100 - Painting

1.3 REFERENCES

A. ASTM A525 - Standard Specification for General Requirements for Steel Sheet, Zinc-Coated (Galvanized) by the Hot-Dip Process.

B. ASTM A653 - Standard Specification for Steel Sheet, Zinc-Coated (Galvanized) or Zinc-Iron Alloy-Coated (Galvannealed) by the Hot Dip Process.

C. ASTM A792 - Standard Specification for Steel Sheet, 55 % Aluminum-Zinc Alloy-Coated by the Hot-Dip Process.

D. Sheet Metal and Air Conditioning Contractors National Association, Inc.

1. Architectural Sheet Metal Manual, current edition.

E. National Roofing Contractors Association

1. Roofing and Waterproofing Manual, current edition.

1.4 SUBMITTALS

A. Comply with provisions of Section 013300, Submittal Procedures.

B. Product Data: submit manufacturer's product information, including installation instructions, product specifications and standard details, including manufacturer's standard range of colors and finish options.

1. Submit color chips for Architect's review and selection.

C. Samples: submit the following for Architect's review and acceptance:

1. Hanger brackets, braces, and stiffeners: one of each type.

2. Fasteners: six of each type.

D. Shop Drawings: submit Shop Drawings and installation details showing methods of installation, sections and details, flashings and all other accessories.

1. Shop Drawings must show interface with all related work of other trades and proposed identification of component parts and finishes.

2. Submit large-scale Shop Drawings (minimum 3/4" = 1'0').

E. Warranty: submit manufacturer's standard warranty information for review and acceptance. Warranty shall cover corrosion of metal components.

1. Installer's warranty shall cover fastener failure, water penetration at joints or failure to drain.

1.5 DELIVERY, STORAGE AND HANDLING

A. Comply with manufacturer's recommendations for storage and handling.

B. Use all means necessary to protect flashing and sheet metal before, during, and after installation and to protect the installed work and materials of other trades.

C. Stack materials to prevent twisting, bending and abrasion, and store in a manner that allows for proper ventilation.

D. Slope materials and components to ensure proper drainage.

E. Prevent contact with materials that may cause discoloration or staining.

F. In the event of damage, immediately make all repairs and replacements necessary for the approval of the Architect at no additional cost to the District.

1.6 QUALITY ASSURANCE

A. Qualifications of Manufacturer: Manufacturer shall specialize in manufacturing products specified in this Section.

B. Qualifications of Installers:

1. Installer shall be thoroughly experienced in the work of this Section, including all materials and methods required, and shall provide at least one person who shall be present at all times during the execution of work of this Section.

a. This qualified person shall direct the entire flashing and sheet metal fabrication and installation and shall ensure materials are installed in accordance with all pertinent local codes and regulations, including SMACNA's Architectural Sheet Metal Manual, current edition at time of construction.

C. Field Measurements: Verify all field measurements prior to fabrication of materials.

2.0 PRODUCTS

2.1 MANUFACTURERS

A. Fry Reglet Architectural Metals, www.fryreglet.com

2.2 MATERIALS

A. General: Where sheet metal is required and no material or gauge is indicated herein or on the Drawings, furnish and install the highest quality commensurate with the referenced standards.

1. Minimum thickness of sheet metal shall be no less than 20 gauge galvanized metal.

2. Galvanized Iron:

a. Sheet metal or iron shall be a standard brand of openhearth copperbearing steel, copper-molybdenum iron, or pure iron sheets.

3. Zinc Coating:

a. All galvanized sheets shall have a zinc coating applied by hot dip process to all surfaces per ASTM A653.

b. Zinc coating shall weigh not less than 1-1/4 ounces per square foot nor more than 1-1/2 ounces per square foot of surfaces covered and shall conform with ASTM A525.

B. Nails, Rivets and Fasteners:

1. Use only soft iron rivets having rust-resistance coating, galvanized nails, and cadium plated screws and washers in connection with galvanized iron and steel.

C. Flux:

1. All flux used for galvanized iron or steel shall be raw muriatic acid.

D. Solder:

1. All solder used on galvanized sheet steel shall conform with the current ASTM B32.

E. Other Materials:

1. All other materials not specifically described but required for a complete and proper installation of flashing and sheet metal shall be new, first quality of their respective kinds, and subject to the approval of the Architect.

3.0 EXECUTION

3.1 SURFACE CONDITIONS

A. Inspection:

1. Prior to work of this Section, carefully inspect the installed work of other trades and verify that all such work is complete to the point where this installation may properly commence.

2. Verify that flashing and sheet metal may be installed in accordance with the original design, approved Shop Drawings, and the referenced standards.

B. Correction:

1. In the event of discrepancy, immediately notify the Architect.

2. Do not proceed with installation in areas of discrepancy until all such discrepancies have been resolved.

3.2 INSTALLATION

A. General:

1. Form all sheet metal accurately to the dimensions and shapes required, finishing all molded and broken surfaces with true, sharp, and straight lines and angles and, where intercepting other members, coping to an accurate fit and soldering securely.

2. Unless otherwise specifically permitted by the Architect, turn all exposed edges back 1/2 inch.

B. Expansion:

1. Form, fabricate, and install all sheet metal so as to adequately provide for expansion and contraction in the finished work.

C. Weatherproofing:

1. Finish watertight and weathertight where so required.

2. Make all lock seam work flat and true to line, and sweated full of solder.

3. All flat lock seams and lap seams, when soldered, shall be at least 1/2 inch wide.

4. Lap seams not soldered shall lap according to pitch but in no case less than three inches.

5. Make all flat and lap seams in direction of flow.

D. Joints:

1. Join parts with rivets or sheet metal screws where necessary for strength or stiffness.

2. Provide suitable watertight expansion joints for all runs of more than 40 feet except where closer spacing is indicated on the Drawings or required for proper installation

E. Nailing:

1. Where ever possible, secure metal by means of clips or cleats without nailing through the metal.

2. In general, space all nails, rivets, and screws not more than eight inches apart and, where exposed to the weather, use lead washers.

3. For nailing into wood, use barbed roofing nails 1-1/4 inches long by 11 gauge.

4. For nailing into concrete, use drilled plugholes and plugs.

F. EMBEDMENT

1. Embed all metal in connection with roofs in a solid bed of caulking, using the materials and methods described in Section 079000, Sealants and Caulking.

G. SOLDERING

1. General:

a. Thoroughly clean and tin all joint materials prior to soldering.

b. Perform all soldering slowly with a well heated copper in order to heat the seams thoroughly and to completely fill them with solder.

c. Perform all soldering with a heavy soldering copper of blunt design, properly tinned for use.

d. Make all exposed soldering on finished surfaces neat, full flowing, and smooth.

3.3 TESTS

A. Upon request of the Architect, demonstrate by hose or standing water that all sheet metal is completely watertight.

3.4 CLEAN UP

A. Upon completion, remove all debris resulting from work of this Section.

3.5 WARRANTY

A. The products delivered shall be free of defects.

B. Manufacturer's standard performance warranty, as available for specified installation and environmental conditions.

END OF SECTION

SECTION 076100 – SHEET METAL ROOFING

1.0 GENERAL

1.1 SUMMARY

A. This Section includes all labor, materials, equipment, operations, or methods listed, mentioned or scheduled on the plans and/or herein specified, including all incidentals necessary and required for completion of work under this Section.

1. Pre-finished galvanized sheet steel roofing system, including but not limited to the following:

a. Pre-finished roof panels and associated flashings, panel attachment devices.

b. Waterproof membrane.

c. Thermal insulation.

d. Slip-sheet (if required).

e. Pre-finished valley flashing, gutters, rain water leaders and splash pans.

f. Pre-finished copings, fascias and closure flashing between fascias and face of wall, below roof deck.

B. Provide engineering design and calculations as specified and required to furnish and install a roof system meeting specified performance test criteria and design requirements. Design Engineer shall be currently licensed in California.

1.2 RELATED SECTIONS

A. Documents affecting work of this Section include, but are not necessarily limited to, General Conditions, Special Conditions and Division 1 of these Contract Documents.

B. Section 053000 - Metal Decking: Provision of metal decking.

C. Section 072600 - Vapor Retarders: Provision of vapor retarders.

D. Section 075216 - Styrene-Butadiene-Styrene Modified Bituminous Membrane Roofing: Provision of roofing system.

E. Section 092900 - Gypsum Board: Provision of gypsum sheathing.

1.3 REFERENCES

A. AAMA - American Architectural Manufacturers Association

1. 605.2 - High Performance Organic Coatings on Architectural Aluminum Extrusions and Panels.

B. ASTM - American Society for Testing and Materials

1. A653 - Steel Sheet, Zinc-Coated (Galvanized) or Zinc-Iron Alloy-Coated by the Hot-Dip Process.

2. A924 - Steel Sheet, Aluminum-Zinc Alloy Coated by the Hot-Dip Process, Structural (Physical) Quality.

3. A792 - Standard Specification for Steel Sheet, 55 Percent Aluminum-Zinc Alloy-Coated by the Hot-Dip Process.

4. B32 - Specification for Solder Metal.

5. C203 - Standard Test Methods for Breaking Load and Flexural Properties of Block-Type Thermal Insulation.

6. C272 - Standard Test Method for Water Absorption of Core Materials for Structural Sandwich Constructions.

7. C518 - Standard Test Method for Steady-State Thermal Transmission Properties by Means of the Heat Flow Meter Apparatus.

8. D1621 - Standard Test Method for Compressive Properties of Rigid Cellular Plastics.

9. D2126 - Standard Test Method for Response of Rigid Cellular Plastics to Thermal and Humid Aging.

10. D2244 - Calculation of Color Differences from Instrumentally Measured Color Coordinates.

11. D3273 - Standard Test Method for Resistance to Growth of Mold on the Surface of Interior Coatings in an Environmental Chamber.

12. D6163 - Standard Specification for Styrene Butadiene Styrene (SBS)

Modified Bituminous Sheet Materials Using Glass Fiber Reinforcements.

13. E84 - Standard Test Method for Surface Burning Characteristics of Building Materials.

14. E96 - Standard Test Methods for Water Vapor Transmission of Materials.

15. E1646 - Test Method for Water Penetration of Exterior Metal Roof Panel Systems by Uniform Static Air Pressure Difference, American Society for Testing and Materials.

16. E1680 - Test Method for Rate of Air Leakage through Exterior Metal Roof Panels Systems, American Society for Testing and Materials.

C. FM - Factory Mutual

1. 4471 - Approval Standard for Class I Panel Roofs.

D. NRCA - National Roofing Contractors Association

1. Roofing and Waterproofing Manual, 5th edition.

E. SMACNA - Sheet Metal and Air Conditioning Contractors National Association

1. Architectural Sheet Metal Manual, 5th edition.

F. UL - Underwriter's Laboratories

1. UL 580 - Tests for Uplift Resistance of Roof Assemblies, Underwriter's Laboratories, Inc.

1.4 SYSTEM DESCRIPTION

A. Performance Requirements: Install sheet metal roofing capable of withstanding normal thermal movement, wind loading, structural movement, thermally induced movement and exposure to weather without failure or infiltration of water into the building interior.

B. System shall be approved by the manufacturer for applications on slopes of 1/4-inch/foot or greater.

C. Over structural metal deck, provide extruded polystyrene thermal insulation, a noncombustible cover board, a waterproof membrane, a slip sheet if required, and a standing seam metal roof.

D. Provide self-adhering sheet flashing at valleys and other areas where slopes are less than 1/4-inch per foot.

1.5 SUBMITTALS

A. Product Data: Submit product data for each product indicated. Include details of construction relative to materials, dimensions of individual components, profiles, and finishes.

B. Shop Drawings:

1. Show details for forming, joining, and securing metal roofing, and for pattern of seams.

2. Show expansion joint details and waterproof connections to adjoining work and at obstructions and penetrations.

3. Show insulation layout 4. Show fastening methods and fastener patterns, anchoring methods, provisions for thermal movement, and installation details.

C. Product Data: Submit data on the following:

1. Roofing panels including profile, finish, typical details, panel attachment devices.

2. System attachment components including clips and bearing plates.

3. Insulations.

4. Waterproof membrane.

5. Self-adhering sheet membrane flashing.

6. Slip Sheet.

D. Samples:

1. Submit two samples 24 inch x panel width in size illustrating metal roofing mounted on plywood backing illustrating typical seam, material, and finish.

E. Test Reports:

1. Submit copies of all laboratory test reports required by this Section.

Test reports shall be certified. Testing shall be conducted at approved laboratories and/or under the direct supervision of an independent engineer licensed in California as required for the types of tests conducted.

F. Design Calculations:

1. Submit calculations to show that the basic system meets the uplift requirements. These calculations shall correlate the general data from a manufacturer to the specific conditions of the project Include calculations for:

   a. Wind load uplift design pressure at specified roof locations using specified design loads.

   b. Panel clip spacing and allowable load per dip.

   c. Fastening of panel clips to structure (metal deck).

1.6 QUALITY ASSURANCE

A. Performance:

1. Metal roofing panel system shall comply with specified wind uplift resistance criteria, and shall have a performance equivalent to that required to achieve a windstorm classification of 1-90 when tested in accord with Factory Mutual 4471 - Approval Standard for Class I Panel Roofs, or UL 90 when tested in accord with Underwriter's Laboratories, Inc. (UL) Test Method 580 - Tests for Uplift Resistance of Roof Assemblies.

2. Metal roof panel system shall be designed for negative loading. Determine panel bending and dip-to-panel strength. Capacity for gauge, span, or loading other than those tested may be determined by interpolating between test values only. Compute uplift loads on anchor screws with full recognition of prying forces from eccentric clip loading. Calculate holding strength of fasteners in accordance with the thickness or length of embedment and properties of the material holding the point. Include factors of safety as specified.

3. Metal roof panel shall have a maximum air infiltration rate of 0.002 - 0.003 cfm/ft2 at a pressure differential of minimum 12 psf when tested in accordance with ASTM E1680.

4. Metal roof panel shall have no uncontrollable water leakage at a

minimum pressure differential of 20 psf when tested in accordance with ASTM E1646.

5. Metal roof panel shall be tested in accordance with Underwriter's Laboratories (UL) test method for impact resistance. Materials shall meet or exceed Class 4.

1.7 DESIGN REQUIREMENTS

A. Metal roof systems shall be provided as complete systems, under one responsibility. All components of the metal roofing panels shall be supplied by one manufacturer.

1. Panels shall be pre-formed to the final profile and configuration in the factory, except for field formed seams. Panels shall be continuous lengths to produce the lap pattern as shown for each roof. Ribs of adjoining sheets shall be in continuous contact from eave to ridge.

2. Field roll-forming not permitted, except for minor flashing and transition pieces.

3. There shall be no exposed or penetrating fasteners except where shown on approved shop drawings. Fasteners shall be stainless steel, or corrosion resistant coated steel. There shall be a minimum of two fasteners per panel clip.

4. Panel seams shall be of the double lock design. Field formed seams shall be mechanically locked by panel manufacturer's locking tool. Seam shall include a continuous factory applied sealant.

5. Roof panel anchor clips shall be concealed and designed to allow for longitudinal thermal movement of the panels, except where specific fixed points are indicated. Panel end laps shall be continuously cleated and allow for thermal movement.

B. Design Loads:

1. Wind Uplift.

a. Design load applications shall be in accord with California Building Code, and with recognized methods of evaluation.

b. Design uplift pressures for the roof system shall be computed and applied using a basic wind speed of 70 mph and Exposure

c. Roof system and attachments shall resist the following minimum wind loads, or greater if required to comply with specified windstorm classification:

	LOCATION	NEGATIVE PRESSURE (psf)
1	At eaves:	36.5 psf within 10 feet
2	At rakes:	36.5 psf within 10 feet
3	At ridges:	36.5 psf within 10 feet
4	At building corners:	
5	At overhangs:	44.5 psf within 10 feet
6	At central areas:	20.6 psf within 10 feet

d. Design uplift force for each connection assembly shall be that pressure given for the area under consideration, multiplied by the tributary load area of the connection assembly, and multiplied by a factor of safety of 2.0.

2. Thermal Effects: Roof panels shall be free to move in response to expansion and contraction forces resulting from maximum local temperature variations, based on a range of 10 degrees F minimum to 170 degrees F maximum.

3. Rainfall: Gutters and rain water leaders shall be designed for rainfall intensity based on 100 year storm criteria as given in the SMACNA manual, unless local experience requires a greater intensity.

C. Panel Anchorage System:

1. Method shall incorporate the use of bearing plates on top of the insulation, under the waterproof membrane. Bearing plates shall be attached separately to the structural metal deck. Plate locations shall be designed so that the plate fasteners penetrate only the top flutes of the structural metal deck. Panel clips shall attach to the bearing plates with a minimum of two fasteners.

2. Bearing plate size, thickness and fasteners shall be as required by calculations to resist wind uplift and thermal loads. All materials shall be corrosion resistant.

3. Panel clips, except at specified fixed points, shall be of a design to allow for thermal expansion and contraction, to an extent as calculated by factors including panel material coefficient of expansion, panel length, and temperature ranges.

4. Supplemental furring shall be provided as required to support transitions,

flashings, gutters, fascias, etc.

D. Accessories and Fasteners:

1. All fasteners and accessories shall be corrosion resistant and compatible.

2. Accessories and fasteners shall be capable of resisting the calculated wind and thermal loads, to comply with performance requirements for windstorm classification.

3. Fasteners shall not restrict free movement of roof panel system resulting from thermal forces, except at designed points of roof panel fixity.

4. Panel clip fasteners shall be as required by calculations to resist wind uplift and thermal loads.

5. Any exposed fasteners shall be of a low profile (i.e., "pancake head") fastener head design to minimize wear points and potential damage or perforation of the panel.

1.8 MOCK-UP

A. Construct a mock-up at project site for Architect's review and approval.

B. Mock-up shall include the following:

1. Minimum of two roofing panels, with specified finish, maximum length for project, seamed together.

2. Typical ridge and eave fascias, flashing. Typical eave gutter section.

3. Typical rake fascia on one side.

C. Mock-up, when approved, shall serve as a standard of quality for actual installation.

1.9 QUALIFICATIONS

A. Manufacturer's Qualifications:

1. Manufacturer shall have a minimum of five years experience in manufacturing metal roofing systems. Panels specified in this section shall be produced in a permanent factory environment with fixed-base roll-forming equipment. A letter certifying the manufacturer's qualifications shall accompany the product material submittals.

2. Manufacturer shall have been involved in at least five projects similar in size and complexity to this project.

3. Roofing panels, clips, closures and other accessories shall be standard products of the same manufacturer; shall be the latest design by the manufacturer; and shall have been designed by the manufacturer to operate as a complete system for the intended use.

B. Manufacturer's Representative:

1. Manufacturer shall employ a representative having authorization from manufacturer to approve field changes and be thoroughly familiar with the products and with installation in the geographical area where construction will take place. Representative shall have at least five year's experience installing project of similar scope and magnitude. Representative shall be available to perform field inspections and attend meetings.

C. The Installer shall meet the following minimum criteria:

1. Be factory trained and approved by the manufacturer to install the specified system, and shall have a minimum of three year's experience as an approved installer for the manufacturer.

2. Have installed five projects of similar scope and magnitude that have been in service for a minimum of three years with satisfactory performance of the roof system.

1.10 PRE-INSTALLATION CONFERENCE

A. Comply with requirements of Section 013100.

B. Convene minimum one week prior to commencing Work of this section.

1.11 DELIVERY, STORAGE, AND HANDLING

A. Product Storage and Handling: Comply with requirements of Section 016000.

B. Stack material to prevent twisting, bending, and abrasion, and to provide ventilation. Slope metal sheets to ensure drainage.

C. Prevent contact with materials causing discoloration or staining.

1.11 COORDINATION

A. Coordination and Project Conditions: Comply with requirements of Section 013100.

B. Coordinate with Work of Section 053000 and Section 075216.

1.12 WARRANTY

A. Product Warranties and Product Bonds: Comply with requirements of Section 017000.

B. Furnish 5-year manufacturer warranty for custom sheet metal roofing, except that the warranty shall be extended by the paint finish manufacturer's standard multiyear warranty.

2.0 PRODUCTS

2.1 MANUFACTURERS

A. Acceptable Manufacturers

1. Garland Company, Inc.; 831-324-335; www.garlandco.com

2.2 MATERIALS

A. Standing Seam Metal Roofing: R-Mer Span:

1. Width of Standing T-Seam Panel: 1 inch T-seam.

a. 16 inches.

2. Standing Seam: 2-3/8 inch tall mechanically seamed with factory installed hot melt sealant in-seam cap. Panel/Cap is configured with a total of 4 layers of metal surrounding anchor clip.

3. Panel Profile: Provided with minimum 1-1/2 inches wide elevated mesa's every 2 inches on center continuous throughout panel.

a. Slope: Open Purlins or Solid Substrate down to 1/4:12.

4. Panel material:

a. Galvanized steel 22 gauge, G90, smooth as per ASTM A 653.

5. Flashing and flat stock material: Fabricate in profiles indicated on

Drawings of same material, thickness, and finish as roof system, unless indicated otherwise.

6. Accessory Components:

a. Anchor Clips:

1) Concealed Standard Anchor Clips: Clips 16 gauge galvanized steel, 1 piece clip with projecting legs for additional panel alignment and provision for unlimited thermal movement in each direction along the longitudinal dimension.

7. Fasteners:

a. Concealed fasteners: Corrosion resistant steel fasteners (zinc plated, stainless steel or equal) designed to meet structural loading requirements.

b. Exposed fasteners: Series 410 stainless steel fasteners or 1/8 inch diameter stainless steel waterproof rivets. All exposed fasteners shall be factory painted to match the color of the standing seam panels.

8. Closures: Factory precut closed cell foam meeting ASTM D 1056 or ASTM D 3575, enclosed in metal channel matching panels when used at hip, ridge, rake, and jamb.

9. Provide all miscellaneous accessories for complete installation.

2.3 STANDING SEAM METAL ROOFING ACCESSORIES

A. Waterproof membrance: Roofing Felt

1. Two layers, ASTM D226, Type II, nominal 30lb/100sf

2. Manufacturer: Owns-Corning Fiberglass Corp, or approved equal.

B. Underlayment:

1. ASTM D1970; cold applied, self-adhering reinforced polyethylene film with rubberized asphalt adhesive coating on one side.

a. W R Grace and Co., “Ultra", for high temperature conditions.

C. Slip Sheet

1. Provide minimum 5lb/100sq.ft. rosin sized building paper.

D. Barrier Boards:

1. Georgia-Pacific Corp. 1/4 inch minimum Dens-Deck protective barrier board with a Class A fire rating over deck surfaces.

E. Bearing Plates:

1. Galvanized steel bearing plates 3 inches by 5 inches by 16 gauge, minimum.

2. Pre-punch with a hole pattern matching that of the panel anchor clips. Slotted holes are acceptable.

F. Sealant:

1. Concealed Applications: Non-Curing Butyl Sealant - Schnee-Morehead, Inc. SM5430 Acryl-R, or equal.

2. Exposed Applications: UV Resistant Tripolymer Sealant - Geocel Corporation, 2300 Tripolymer Sealant, or equal.

2.4 METAL ROOFING ACCESSORiES

A. R-Mer SS Sheet Stock: High gloss, factory painted aluminum

1. Material and Thickness: 22 gauge steel

2. Color: Cool Champagne or as selected by Architect from manufacturers standard colors.

2.5 INSULATION

A. General:

1. Comply with California Energy Code, CCR Title 24, Part 6, Subchapter 2, Section 118: Certification that insulation complies with California Quality Standards for Insulating Material (CCR Title 20, Chapter 4, Article 3).

2. Comply with California Building Code (2001), Section 707: Flame spread rating not to exceed 25 and smoke density not to exceed 450 when tested in accordance with CBC.

3. Blowing agent to have zero ozone depletion potential and conform to the Montreal Protocol established in 1987.

B. Extruded Polystyrene: ASTM C578, Type IV. 25 psi minimum compressive strength. 3 inch thick. Two layers required for total LTTR value of 30. Cold adhesive applied.

1. Dow, “Styrofoam Deckmate Plus".

2. Owens Coming, “FOAMULAR 250".

3. Accessories:

a. Joint Tape: Protecto-Wrap BT20; 3M Contractor Sheathing Tape No. 8086; Polyguard Products.

b. Adhesive for Extruded Polystyrene Insulation: Henry Co., “111 InsulBond Roof Insulation Adhesive".

4. Substitutions: Section 01 62 00 - Product Option Requirements; no known equal to polystyrene for water and fire resistance.

2.6 ACCESSORIES

A. Sealant: Two-Component Polyurethane, specified in Section 07 92 00.

B. Fascias, Gutters, Rainwater Leaders, Flashing: Of same material and finish as roof panels.

C. Slip Sheet - if required to prevent adhesion of roofing panels to waterproof membrane, and/or to protect wash coat at underside of roofing panels from abrasion: Rosin sized paper or unsaturated building paper.

2.7 FABRICATION – GENERAL

A. General: Fabricate sheet metal roofing to comply with details shown, with metal roofing manufacturer’s written instructions, and with recommendations of SMACNA’s “Architectural Sheet Metal Manual” that apply to the design, dimensions, metal, and other characteristics of installation indicated.

B. Fabricate sheet metal to allow for expansion in running work sufficient to prevent leakage, damage, and deterioration of the Work. Form exposed sheet metal work to fit substrates without excessive oil canning, buckling, and tool marks, true to line and levels indicated, and with exposed edges folded back to form hems.

C. Expansion Provisions: Where lapped or bayonet-type expansion provisions in the Work cannot be used, or would not be sufficiently waterproof and weatherproof, form expansion joints of intermeshing hooked flanges, not less than 1 inch deep, filled with sealant (concealed within joints).

D. Sealant Joints: Where movable, nonexpansion-type joints are indicated or required to produce weathertight seams, form metal to provide for proper installation of elastomeric sealant, in compliance with SMACNA standards.

E. Separations: Separate metal from noncompatible metal or corrosive substrates by coating concealed surfaces at locations of contact with bituminous coating or other permanent separation as recommended by manufacturer or fabricator.

2.8 FABRICATION - ROOF PANELS AND RELATED COMPONENTS

A. Field roll-forming not permitted, except for minor flashing and transition pieces.

B. Form sections to shapes as indicated on Drawings, accurate in size, square, and free from distortion or defects.

1. Panel spacing: Equally spaced within range of specified by manufacturer or as shown on drawings.

C. Fabricate cleats of same material as sheet, to interlock with sheet.

D. Fabricate starter strips of same material as sheet, continuous, to interlock with sheet.

E. Panels shall be continuous lengths to produce the lap pattern as shown for each roof.

F. Hem exposed edges on underside 1/2 inch; miter and seam comers.

G. Form material with double lock standing seams, except where otherwise indicated. At moving joints, use sealed lapped, interlocking hooked seams.

H. Fabricate comers from one piece with minimum 18 inch long legs; seam for rigidity, seal with sealant.

I. Fabricate vertical faces with bottom edge formed outward 1/4 inch and hemmed to form drip.

J. Fabricate flashings to allow toe to extend 2 inches over roofing, unless otherwise shown. Return and brake edges.

2.9 FACTORY FINISHING - ROOF PANELS AND RELATED COMPONENTS

A. PVDF (Polyvinylidene Fluoride) Coating: High Performance Organic Finish, AAMA 605.2; multiple coat, thermally cured fluoropolymer finish system. Low gloss finish.

3.0 EXECUTION

3.1 EXAMINATION

A. Coordination and Project Conditions: Comply with requirements of Section 013100.

B. Inspect metal roof deck to verify deck is clean and smooth, free of depressions, waves, or projections, and properly sloped to eaves.

C. Verify deck is dry.

D. Verify roof openings, pipes, sleeves, or vents through roof are solidly set.

3.2 PREPARATION

A. Coordinate metal roofing with rain drainage work, flashing, trim and construction of decks, walls and other adjoining work to provide a leakproof, secure and noncorrosive installation.

B. Promptly remove protective film, if any, from exposed surfaces of metal roofing. Strip with care to avoid damage to finish.

3.3 GENERAL INSTALLATION REQUIREMENTS

A. Install roofing to comply with sheet metal roofing manufacturer's written instructions, unless otherwise indicated.

B. Separate dissimilar metals by painting each metal surface in area of contact with a bituminous coating, by applying rubberized-asphalt underlayment to each metal surface, or by other permanent separation as recommended by manufacturers of dissimilar metals.

C. Install waterproof membrane and building paper slip sheet if required on substrate under metal roofing, as recommended by sheet metal manufacturer. Use adhesive for temporary anchorage, where possible, to minimize use of mechanical fasteners under meta! roofing. Apply from eave to ridge in shingle fashion and lap joints 2 inches minimum.

D. Form and fabricate sheets, seams, strips, cleats, valleys, ridges, edge treatments, integral flashings, and other components of metal roofing to profiles, patterns, and drainage arrangements shown and as required for leakproof construction. Provide for thermal expansion and contraction of the Work. Seal joints as shown and as required for leakproof construction. Shop fabricate materials to greatest extent possible.

E. Sealant-Type Joints: Where sealant-filled joints are used, embed hooked flanges of joint members not less than 1 inch into sealant. Form joints to completely conceal sealant. When ambient temperature is moderate, between 40 and 70 degrees Fahrenheit, at time of installation, set joint members for 50 percent movement either way. Adjust setting proportionately for installation at higher ambient temperatures. Do not install sealant-type joints at temperatures below 40 degrees Fahrenheit. Comply with requirements of Section 7900 for handling and installing sealants.

F. Fabricate and install work with lines and comers of exposed units true and accurate. Form exposed faces flat and free of buckles, excessive waves, and avoidable tool marks, considering temper and reflectivity of metal. Provide uniform, neat seams with minimum exposure of solder, welds, and sealant. Fold back sheet metal to form a hem on concealed side of exposed edges, unless otherwise indicated.

G. Conceal fasteners and expansion provisions where possible in exposed work and locate to minimize possibility of leakage. Cover and seal fasteners and anchors as required for a tight installation. Spacing of fasteners shall not exceed 48 inches on center.

3.4 INSTALLATION

A. Deck Closures; Install preformed closures supplied by Section 05300 in deck flutes.

B. Insulation:

1. All insulation is to be adhesive applied.

2. Lay boards with edges in moderate contact without forcing.

3. Seal all joints with joint tape

C. Install bearing plate system in accord with approved design. Locate plates so that fasteners penetrate only the top flutes of metal deck.

D. Waterproof Membrane: Install continuously over entire surface to be covered by

metal roof system. Weather lap joints minimum 2 inches, or as recommended by membrane manufacturer.

1. Where slope of roof is less than % inch in 12 inches, install self-adhering waterproof membrane extending 4 feet beyond the flow line in each direction.

E. Install fascias, gutters, downspouts, and metal splash pans.

F. Standing Seam Roofing Installation:

1. Conform to manufacturer's instructions and approved installation drawings.

2. Install starter and edge strips, and cleats before starting installation.

3. Locate standing seams equally spaced within range specified by manufacturer or as shown in drawings.

4. Lay sheets with long dimension perpendicular to eaves. Apply panels beginning at eaves.

5. Lock cleats into seams. Allow for thermal movement.

6. Stagger transverse joints of roofing sheets as shown.

7. At eaves and gable ends, terminate roofing by hooking over edge strip.

8. Finish standing seams to 1-1/2 inch high.

9. Provide locked standing seam.

10. Fold lower ends of seams at eaves over at 45 degree angle.

11. Terminate standing seams at ridge and hips by turning down with tapered fold.

G. Flashing Installation:

1. Secure flashings in place using concealed fasteners.

2. Cleat and seam joints.

3. Apply plastic cement compound between metal flashings and felt flashings.

4. Fit flashings tight in place. Make comers square, surfaces true and straight in planes, and lines accurate to profiles.

5. Seal metal joints watertight

3.3 PROTECTION OF INSTALLED CONSTRUCTION

A. Protect installed construction in accordance with requirements of Section 017000.

B. Do not permit traffic over unprotected roof surface.

END OF SECTION

SECTION 076200 – SHEET METAL FLASHING AND TRIM

1.0 GENERAL

1.1 SUMMARY

A. This Section includes all labor, materials, equipment, operations, or methods listed, mentioned or scheduled on the plans and/or herein specified, including all incidentals necessary and required for completion of work under this Section.

1. Painted galvanized sheet metal flashing and counterflashing.
2. Prefinished architectural sheet metal.
3. Exposed metal trim.
4. Miscellaneous sheet metal accessories.
5. Elastic flashing.
6. Aluminum composite panels.

1.2 RELATED SECTIONS

A. Documents affecting work of this Section include, but are not necessarily limited to, General Conditions, Special Conditions and Division 1 of these Contract Documents.

B. Section 055000 - Metal Fabrications: For protection of dissimilar metals.

C. Section 076100 - Sheet Metal Roofing: Provision of sheet metal roofing.

D. Section 079200 - Joint Sealants: Provision of sealants.

E. Section 099100 - Painting and Coating: For finish painting.

F. Products Furnished But Not Installed Under This Section: Sheet metal flashing and trim associated with the following Section.

1. Section 075500 - Hybrid TPO Roofing

1.3 REFERENCES

A. AAMA - American Architectural Manufacturers Association

1. 603.8 - Voluntary Performance Requirements and Test Procedures for Pigmented Organic Coatings on Extruded Aluminum.

B. ASTM - American Society for Testing and Materials

1. A525 - Standard Specification for General Requirements for Steel Sheet, Zinc Coated (Galvanized) by the Hot-Dip Process.

2. A526 - Standard Specification for Steel Sheet, Zinc-Coated (Galvanized) by the Hot-Dip Process, Commercial Quality.

3. A527 - Standard Specification for Steel Sheet, Zinc-Coated (Galvanized) by the Hot-Dip Process Lock Forming Quality.

4. A792 - Standard Specification for Steel Sheet, Aluminum-Zinc Alloy-Coated by the Hot Dip Process, General Requirements.

5. B32 - Standard Specification for Solder Metal.

6. B209 - Standard Specification for Aluminum and Aluminum-alloy Sheet and Plate.

7. D1970 - Standard Specification for Self-Adhering Polymer Modified Bituminous Sheet Materials Used as Steep Roofing Underlayment for Ice Dam Protection.

8. D2822 - Standard Specification for Asphalt Roof Cement.

C. AWS - American Welding Society

D. SMACNA - Sheet Metal and Air Conditioning Contractors National Association, Inc.

1. Architectural Sheet Metal Manual.

E. SSPC - The Society for Protective Coatings

1. Paint 12 - Paint Specification No. 12 Cold-Applied Asphalt Mastic (Extra Thick Rim).

1.4 SYSTEM DESCRIPTION

A. Performance Requirements

1. Work of this Section shall physically protect roofing and other items as indicated from damage that would permit water leakage to building interior.

2. Install sheet metal flashing and trim to withstand wind loads, structural movement, thermally induced movement and exposure to weather without failing.

1.5 SUBMITTALS

A. Setting Drawings or Templates: Submit setting drawings or templates and setting instructions, for exact locations.

2.0 PRODUCTS

2.1 MATERIALS

A. Sheet Metal Flashing and Trim Materials

1. Zinc-Coated Steel: Commercial quality with 0.20 percent copper, ASTM A526 except ASTM A527 for lock-forming, G90 hot-dip galvanized, mill phosphatized where indicated for painting; 20 gauge except as otherwise indicated.

B. Elastic Sheet Flashing/Membrane

1. Nonreinforced flexible, black elastic sheet flashing of 50 to 60 mils thickness.

2. Manufacturer: Tremco, “Hypalon Elastomeric Sheeting"; Fortifiber, or equal.

C. Surface Reglet and Counterflashing; As manufactured by Fry Reglet, “Type SM", or approved equal, except as otherwise indicated.

D. Miscellaneous Materials and Accessories

1. Solder and Flux: For use with steel, provide 50 - 50 tin/lead solder, ASTM B32, with rosin flux. Re-melted or reworked solder will not be permitted.

2. Fasteners: Same metal as flashing/sheet metal or other noncorrosive metal as recommended by sheet manufacturer. Match finish of exposed heads

with material being fastened.

3. Bituminous Coating: SSPC Paint 12, solvent type bituminous mastic, nominally free of sulfur, compounded for 15 mil dry film thickness per coat.

4. Metal Accessories: Provide sheet metal clips, straps, anchoring devices and similar accessory units as required for installation of work, matching or compatible with material being installed, noncorrosive, size and gauge required for performance.

5. Elastic Flashing Filler: Closed-cell polyethylene or other soft closed cell material recommended by elastic flashing manufacturer as filler under flashing loops to ensure movement with minimum stress on flashing sheet.

6. Roofing Cement: ASTM D2822, asphaltic.

E. Self-Adhering Sheet Membrane (SASM): ASTM D1970, cold applied, seif-adhering reinforced polyethylene film with rubberized asphalt adhesive coating on 1 side, for high temperature conditions.

1. Product: W. R. Grace and Co., “Ultra", or equal.

F. Materials for Permanent Protection of Dissimilar Materials: As specified in Section 055000.

2.2 FABRICATION

A. Shop Assembly

1. Design and fabricate work in accordance with SMACNA, unless otherwise indicated.

2. As far as practicable, form and fabricate sheet metal in shop. Where on-site fabrication is required, provide work equal to shop quality. Additionally, identify bulk materials from which items are field fabricated by manufacturer’s trademark printed or embossed at frequent intervals.

3. Reproduce accurately profiles and bends indicated.

4. Provide profiles with interactions that are sharp, even and true; with plane surfaces free from buckles and waves; and seams that follow direction of water flow.

5. Reinforce correctly for strength and appearance.

6. Cut, fit, and drill sheet metal as required to accommodate related, adjacent or adjoining work.

7. Exposed Edges of Sheet Metal: Fold, bend or return exposed edges of sheet metal. Raw edges will not be permitted.

8. Form pieces in longest practical lengths.

B. Sheet Metal Joints

1. In general, provide lock joints; where impractical, lap, rivet, solder, or weld joints, or join as otherwise recommended by manufacturer.

2. Join joints and miters as recommended by manufacturer.

3. Where positive joining is required, weld in accordance with applicable AWS standards.

4. Turn lock joints on exposed surfaces in direction of flow.

C. Soldering

1. Neatly solder exposed surfaces.

2. Pre-tin edges minimum 1-1/2 inches both sides prior to soldering.

3. Solder and seal metal joints. After soldering, remove flux. Wipe and wash solder joints clean.

D. Expansion and Contraction of Sheet Metal Runs

1. General: Provide loose locking slip joint of maximum 8 feet from external and internal comers, maximum 24 feet length of straight runs, unless manufacturer recommends more frequent interval, and 1 at center of runs less than 20 feet, but more than 8 feet, unless specified otherwise following herein.

E. Provide the following items of materials and minimum gauges as indicated:

1. Cleats: Formed of same metal as that being anchored, with size, shape, and quantity as required to secure flashing and sheet metal work in place.

2. Base Flashing, Counter Flashing and Roof Penetration Flashing

a. Formed with 3/4-inch locked and soldered seams, assembled into units no longer than 16 feet.

b. Join units with 3/4-inch wide loose locked seams filled with soft grade butyl base compound, before units are assembled.

c. Mitre corners and joints by riveted or locked and soldered joints.

2.3 FINISHES

A. Galvanized Sheet Metal

1. Field Finishing

a. Finish: G90, conforming to ASTM A525.

b. After Fabrication: Touch-up abraded surfaces in accordance with Section 099000.

2. Finish Painting: As specified in Section 099000.

B. Prefinished Sheet Metal: Sheet metal at metal roofing and other locations indicated shall be coil coated with organic coating as manufactured by Kynar 500 or Hylar 5000.

1. Color As selected by the Architect to match metal roofing specified in 076100.

3.0 EXECUTION

3.1 INSTALLATION

A. Conform with procedures and methods of installation and applicable details shown and described in SMACNA Manual.

B. Where installation requires fabrication at the Project site, conform to applicable requirements of Article titled “Fabrication” in this Section.

C. Install standard catalog products in accordance with manufacturer’s instructions, unless otherwise indicated.

D. Install work watertight; ensure that items are installed in true and accurate alignment with other items and related work, that joints are accurately fitted, that comers are reinforced and that exposed surfaces are free of dents.

E. Apply flashing compound at slip joints or wherever metal-to-metal contact occurs and movement may be anticipated to occur.

F. Flashings

1. Fasten sheet metal runs to underlaying material by nailing through slotted holes in flange at 3 inches on center, unless otherwise indicated or required by manufacturer.

2. Provide waterproof washers wherever fasteners penetrate flashings.

3.2 ADJUSTING

A. Replace damaged material with new.

3.3 SCHEDULE

A. Fabricate sheet metal items in thickness or weight needed to comply with performance requirements but not less than that listed below for each application and metal.

1. Exposed Trim, Except as Indicated: Galvanized steel, 0.0276-inch thick.

2. Base Flashing: Galvanized steel, 0.0276-inch thick.

3. Counterflashing: Galvanized steel, 0.0217-inch thick.

4. Flashing Receivers: Galvanized steel, 0.0217-inch thick.

5. Drip Edges: Galvanized steel, 0.0217-inch thick.

6. Eave Flashing: Galvanized steel, 0.0217-inch thick.

7. Equipment Support Flashing: Galvanized steel, 0.0276-inch thick.

8. Roof Penetration Flashing: Galvanized steel, 0.0276-inch thick.

9. Cap Flashing and Fascia: Galvanized steel, 0.0516-inch thick.

10. Wall Trays (Tile Pans): 26 gauge.

END OF SECTION

SECTION 076526 – SELF-ADHERING SHEET FLASHING

1.0 GENERAL

1.1 SUMMARY

A. This Section includes all labor, materials, equipment, operations, or methods listed, mentioned or scheduled on the plans and/or herein specified, including all incidentals necessary and required for completion of work under this Section.

B. Provide and install a moisture-retardant self-adhering sheet flashing system over exterior wall sheathing, including sealing, joints and protrusions through membranes as shown on project Drawings, including all related accessories.

1.2 RELATED SECTIONS

A. Documents affecting work of this Section include, but are not necessarily limited to, General Conditions, Special Conditions and Division 1 of these Contract Documents.

B. Section 076000 - Flashing and Sheet Metal

C. Section 081100 - Metal Doors and Frames

D. Section 084213 - Aluminum-Framed Entrances

E. Section 084313 - Aluminum-Framed Storefront

1.3 REFERENCES

A. American Society for Testing and Materials:

1. ASTM E2112-07: Standard Practice for Installation of Exterior Windows, Doors and Skylights.

2. ASTM F1249: Standard Test Method for Water Vapor Transmission Rate.

3. ASTM D779: Water Resistance of Paper, Paperboard, and other Sheet Materials by the Dry Indicator Method (Boat Test).

4. ASTM E96: Water Vapor Transmission of Materials.

5. ASTM E331: Standard Test Method for Water Penetration of Exterior Windows, Skylights, Doors, and Curtain Walls by Uniform Static Air Pressure Difference.

6. ASTM G21: Standard Practice for Determining Resistance of Synthetic Polymeric Materials to Fungi.

7. ASTM C920: Standard Specification for Elastomeric Joint Sealants.

8. ASTM E154-99: Standard Test Method for Water Vapor Retarders Used in Contact with Earth Under Concrete Slabs, on Walls, or as Ground Cover.

B. PSTC-1: Peel Adhesion of Single Coated Tapes, 180 Degree Peel.

1.4 SUBMITTALS

A. Comply with provisions of Section 013300, Submittal Procedures.

B. Product Data: Submit manufacturer's product data, technical data and installation instructions for each material specified herein, including test reports or manufacturer's certificates indicating materials comply with specified requirements.

C. Submit sample of each material specified herein.

1.5 QUALITY ASSURANCE

A. Qualifications: Installer must have successful experience in the installation of air barrier/secondary weather resistant barriers.

B. Install job mock-up using specified flashing system with system of fastening and taping seams as per manufacturer's instructions.

1. Obtain Architect's approval of system for appearance and workmanship standard.

C. Use adequate numbers of skilled workmen who are thoroughly trained and experienced in the necessary crafts and who are completely familiar with the specified requirements and the methods necessary for proper performance of the work of this Section.

D. Cooperate as required in performance of the specified testing and inspecting.

1.6 DELIVERY, STORAGE AND HANDLING

A. Comply with manufacturer's recommendations for storage and handling of materials specified.

2.0 PRODUCTS

2.1 MANUFACTURER

A. Fortifiber Building Products Systems, 419 W. Plumb Lane, Reno, NV 89509, 800-773-4777, www.fortifiber.com, or approved equal.

2.2 MATERIALS

A. Flexible Flashings: Moistop E-Z Seal Self-Adhesive Flashing system:

1. Reinforced multi-layer polymer membrane employing polyethylene and fiberglass reinforcers.

2. Meets Federal Specification per ASTM E2112.

3. Water Vapor Permeance: less than 0.1 perms per ASTM F1249.

4. Water Resistance: 150 hours minimum per ASTM D779.

B. Other Materials and Accessories: Provide other materials not specifically described herein but required for a complete and proper installation, as selected by the Contractor and subject to the approval of the Architect and the manufacturer of building wrap, including but not limited to the following:

1. Adhesives: types as recommended by manufacturer of materials specified herein.

2. Joint Sealers: Moistop Tape and/or Sheathing Tape; pressure sensitive tape or mastic as recommended by manufacturer of materials specified herein.

3. Sealant: Moistop Sealant; polyurethane, one-component balanced modulus, moisture curing, non-sag elastomeric sealant.

a. Reference Standards: AAMA 808.3-92 and ASTM C920 Type S, Grade NS, Class 25.

4. Penetration Seal: The Boot; pre-sized, multi-purpose penetration seal manufactured from puncture resistant polyolefin membrane.

3.0 EXECUTION

3.1 EXAMINATION AND PREPARATION

A. Examine the areas and conditions under which work of this Section will be performed.

1. Correct conditions detrimental to timely and proper completion of the work.

2. Do not proceed until satisfactory conditions are corrected.

B. Ensure items which pass through membrane are properly and rigidly installed and that substrate is free of projections and irregularities which may be detrimental to proper installation of membrane.

3.2 INSTALLATION

A. Install flashing and accessories in accordance with manufacturer's recommended methods of installation.

B. Materials shall be laid smooth without folds or bunches of material.

1. Seam Overlap: as recommended by manufacturer.

2. Sealing: items that are projecting through vapor retarders and/or vapor barriers shall be sealed per manufacturer's instructions.

C. Install flashing over exterior side of exterior wall sheathing after sheathing is installed and before windows and doors are installed.

D. Seal edges and items projecting through building paper. Tape all horizontal and vertical seams of flashing and seal all tears and cuts.

E. Inspect and repair flashing prior to application of finish material over flashing, ensuring there are no tape tears, perforations or similar damage.

.

END OF SECTION

SECTION 077100 - ROOF SPECIALTIES

1.0 GENERAL

1.1 SUMMARY

A. This Section includes all labor, materials, equipment, operations, or methods listed, mentioned or scheduled on the plans and/or herein specified, including all incidentals necessary and required for completion of work under this Section.

B. Provide and install all roof specialties as shown on project Drawings and as specified herein, including:

1. AtticVents
2. Roof Drain & Overflow
3. Gutters
4. Pipe Supports
5. Misc. architectural roof accessories including but not limited to fascia/rake/copings

1.2 RELATED SECTIONS

A. Documents affecting work of this Section include, but are not necessarily limited to, General Conditions, Special Conditions and Division 1 of these Contract Documents.

B. Division 7 - Thermal and Moisture Protection: All Sections

C. Section 099100 - Painting

D. Section 079000 - Sealants and Caulking

1.3 REFERENCES

A. Sheet Metal and Air Conditioning Contractors National Association, Inc.

1. Architectural Sheet Metal Manual, Fourth Edition.

B. National Roofing Contractors Association

1. Roofing and Waterproofing Manual, current edition.

1.4 SUBMITTALS

A. Comply with provisions of Section 013300, Submittal Procedures.

B. Product Data: submit manufacturer's product information, including installation instructions, product specifications and standard details, including manufacturer's standard range of colors and finish options.

1. Submit color chips for Architect's review and selection.

C. Samples: submit the following for Architect's review and acceptance:

1. Gutter and downspout sample: 12" long, full section.

2. Hanger brackets, braces, and stiffeners: one of each type.

3. Fasteners: six of each type.

D. Shop Drawings: submit Shop Drawings and installation details showing methods of installation, sections and details, flashings and all other accessories.

1. Shop Drawings must show interface with all related work of other trades and proposed identification of component parts and finishes.

2. Submit large-scale Shop Drawings (minimum 3/4" = 1'-0').

E. Warranty: submit manufacturer's standard warranty information for review and acceptance. Warranty shall cover corrosion of metal components.

1. Installer's warranty shall cover fastener failure, water penetration at joints or failure to drain.

1.5 DELIVERY, STORAGE AND HANDLING

A. Comply with manufacturer's recommendations for storage and handling.

B. Use all means necessary to protect roof accessories before, during, and after installation and to protect the installed work and materials of other trades.

C. Stack materials to prevent twisting, bending and abrasion, and store in a manner that allows for proper ventilation.

D. Slope materials and components to ensure proper drainage.

E. Prevent contact with materials that may cause discoloration or staining.

1.6 QUALITY ASSURANCE

A. Qualifications of Manufacturer: Manufacturer shall specialize in manufacturing products specified in this Section.

B. Qualifications of Installers:

1. Installer shall be thoroughly experienced in the work of this Section, including all materials and methods required, and shall provide at least one person who shall be present at all times during the execution of work of this Section.

a. This qualified person shall direct the entire installation and shall ensure materials are installed in accordance with all pertinent local codes and regulations, including SMACNA's Architectural Sheet Metal Manual, current edition at time of construction.

C. Field Measurements: Verify all field measurements prior to fabrication of materials.

2.0 PRODUCTS

2.1 MANUFACTURERS

A. Roof Drain: Josam, www.josam.com

B. Overflow: Jay R. Smith Mfg. Co., www.jrsmith.com

C. Pipe Supports: Miro Industries, Inc., 844 South 430 West, Herber City, UT 84032, 1-800-768-6978, www.miroind.com

D. Gutters: Perimeter Systems, 8370 East Hwy 78, Villa Rica, GA 30180, 800-334-9823, www.saf.com/persys

2.2 MATERIALS

A. General:

1. Where no material or gauge is indicated herein or on the Drawings, furnish and install the highest quality commensurate with the referenced standards.

2. See Drawings for sizes of materials.

B. Misc. architectural roof accessories including but not limited to fascia/rake/ coping

1. Type: 24 GA

2. Metal: From roofing panel stock, same color, no substitutions

C. Roof Drain with Overflow System:

1. Roof Drain:

a. Type: #22100-28 Combination Drain/Overflow

b. Metal: Cast Iron

2. Overflow:

a. Type: #1770Y-2 Downspout Nozzle with NO-HUB Connection

b. Metal: Cast Bronze with Cast Iron adaptor

D. Pipe Supports: ‘U’ shaped cradle situated in a polycarbonate resin base.

1. Pillow Block Supports, Model 1.5 with 1.5 spacer as needed.

2. Spacing per manufacturer’s recommendations

E. Gutters: SMACNA Series Gutter System, Style I

1. Manufactured from 0.040” mill finished copper, factory punched with fastening holes elongated to allow for thermal movement.

2. Support Brackets: Manufactured from 0.125” x 1.00” copper, factory punched for fasteners.

3. Interior Straps: Manufactured from 0.125” x 1.00” copper.

4. Finish: Prefinished, high performance coating, two-coat, shop applied, 70% Polyvinylidene Fluoride (PVDF) coating meeting AAMA 2605 specification.

a. Color: To be selected from manufacturer’s full range of 56 EZ Mix Colors.

F. Other Materials:

1. All other materials, not specifically described but required for a complete and proper installation of roof specialties shall be new, first quality of its respective kind, and subject to the approval of the Architect.

3.0 EXECUTION

3.1 SURFACE CONDITIONS

A. Inspection:

1. Prior to work of this Section, carefully inspect the installed work of other trades and verify that all such work is complete to the point where this installation may properly commence.

2. Verify that roof accessories may be installed in accordance with the original design, approved Shop Drawings, and the referenced standards.

B. Correction:

1. In the event of discrepancy, immediately notify the Architect.

2. Do not proceed with installation in areas of discrepancy until all such discrepancies have been resolved.

3.2 INSTALLATION

A. Install in accordance with manufacturer's installation instructions and recommended methods.

B. Finish watertight and weathertight where so required.

C. Join parts with rivets or sheet metal screws where necessary for strength or stiffness.

D. Provide suitable watertight expansion joints for all runs of more than 40 feet except where closer spacing is indicated on the Drawings or required for proper installation

E. Wherever possible, secure metal by means of clips or cleats without nailing through the material.

F. In general, space all nails, rivets, and screws not more than eight inches apart and, where exposed to the weather, use lead washers.

3.3 EMBEDMENT

A. Embed all metal in connection with roofs in a solid bed of caulking, using the materials and methods described in Section 079000, Sealants and Caulking.

3.4 TESTS

A. Upon request of the Architect, demonstrate by hose or standing water that all roof accessories are completely watertight.

3.5 PROTECTION AND CLEAN UP

A. Upon completion, remove all debris resulting from work of this Section.

B. In the event of damage, immediately make all repairs and replacements necessary for the approval of the Architect at no additional cost to the Owner.

3.6 WARRANTY

A. The products delivered shall be free of defects.

B. Manufacturer’s standard performance warranty, as available for specified installation and environmental conditions.

END OF SECTION

SECTION 079000 - SEALANTS AND CAULKING

1.0 GENERAL

1.1 SUMMARY

A. This Section includes all labor, materials, equipment, operations, or methods listed, mentioned or scheduled on the plans and/or herein specified, including all incidentals necessary and required for completion of work under this Section.

B. Provide and install all sealants and caulking where required as shown on project Drawings and as specified herein.

1. Provide a positive barrier against the penetration of air and moisture at joints between items where caulking is essential to the continued integrity of the barrier.

2. Such caulking will normally be performed under the work of various Sections but shall be performed in strict accordance with the provisions herein.

1.2 RELATED SECTIONS

A. Documents affecting work of this Section include, but are not necessarily limited to, General Conditions, Special Conditions and Division 1 of these Contract Documents.

B. Section 062000 - Finish Carpentry

C. Section 088100 - Glass and Glazing

D. Division 9 - Finishes

E. Division 22 - Mechanical

F. Division 26 - Electrical

1.3 REFERENCES

A. American Society for Testing and Materials (ASTM):

1. ASTM E90 & C919

2. ASTM C834, Type C and Type OP, Grade -18 degrees C.

3. ASTM C1193, Standard Guide for Use of Joint Sealants.

4. ASTM C1472, Standard Guide for Calculating Movement and Other Effects When Establishing Sealant Joint Width.

1.4 SUBMITTALS

A. Comply with provisions of Section 013300, Submittal Procedures.

B. Before work is started, a sample opening of each type of joint shall be caulked where directed. Samples shall show materials, workmanship, bond, and color or caulking material as selected for the work. The materials, workmanship, bond, and color of the caulking work throughout the project shall match that of the approved sample joints.

1.5 DELIVERY, STORAGE AND HANDLING

A. Storage:

1. Store all caulking materials and equipment under conditions recommended by its manufacturer.

2. Do not use materials stored for a period of time exceeding the maximum recommended shelf-life of the material.

3. Sealant must be stored in original unopened container between 50 and 80 degrees F.

B. Protection:

1. Use all means necessary to protect caulking materials before, during, and after installation and to protect the installed work and materials of other trades.

C. Repairs:

1. In the event of damage, immediately make all repairs and replacements necessary to the approval of the Architect and at no additional cost to the County.

1.6 QUALITY ASSURANCE

A. Qualifications of Applicators:

1. Applicator of caulk and sealants shall be fully qualified with a minimum of five years' prior experience in similar work and who have been specially trained in the techniques of caulking and who are completely

familiar with the written recommendations of the manufacturer of the material being used.

2. Indication of lack of skill on the part of caulking installers shall be sufficient grounds for the Architect to reject installed caulking and to require its immediate removal and complete recaulking at no additional cost to the County.

B. Qualification of Manufacturer(s):

1. All caulking and sealant materials shall be new stock, manufactured not more than six months prior to use in the project.

2. Whenever the materials are specified by the name of the manufacturer, it shall be taken as intended to mean and specify the materials described, or any other approved made equal thereto, for the purpose intended. the Architect shall be the sole judge as to such equality.

3. Where mixing is required, mix no more material than can be installed within four hours maximum and in amounts not to exceed 5-gallon-unit increments.

1.7 ENVIRONMENTAL REQUIREMENTS

A. See Section 013543, Special Environmental Requirements and Procedures.

B. Provide materials that are low-emitting.

1. Materials shall meet the limits of the State of California DHS Standard Practice for the Testing of Volatile Organic Compounds or shall be identified by the following certification programs:

a. Greenguard Environmental Institute

b. Scientific Certification Systems

2. Provide cut sheet and MSDS showing VOC limits for each adhesive used in the building.

a. Adhesives must meet and/or exceed VOC limits of South Coast Air Quality Management District Rule #1168.

3. Provide cut sheet and MSDS showing VOC limits for each sealant used in the building.

a. All sealants used as filler must meet or exceed Bay Area Resources Board Re. 8, Rule 51.

b. Limits on VOCs for sealants for architectural use are 250 grams/liter (different levels for roadways, roofing material installation, PVC welding, and other).

c. Limits on VOCs for sealant primers for architectural-nonporous are 250 grams/liter; for architectural-porous are 775 grams/liter.

2.0 PRODUCTS

2.1 MANUFACTURERS

A. GE - Silicones, 187 Danbury Road, Wilton, CT 06897, 1-800-255-8886, www.GESilicones.com, or approved equal.

B. Pacific Polymers International, Inc., 12271 Monarch Street, Garden Grove, CA 92841, 1-714-898-0025, www.pacpoly.com, or approved equal.

2.2 MATERIALS

A. General:

1. All caulking and sealant materials, unless otherwise specifically approved by the Architect, shall be a single or double component, primerless, non-sagging type in neutral color or other color approved by the Architect where exposed to view, and shall be one of the following or an equal approval by the Architect.

B. Joint Compound Sealant: ELASTO-THANE 230

1. Composition: Polyurethane-based joint sealant.

2. Basic Uses: For sealing and caulking all joints that are subject to contraction and expansion. Bonds to concrete, wood, glass, and metal.

3. Limitations: Containers that have been opened must be used up within one or two days since it is a moisture-reactive material. It sets up when exposed to air. All surfaces must be completely free of foreign matter. (White color may discolor from exposure to U.V. and also from fluorescent light.)

4. Sizes: Available in 5-gallon pails, 10.5 oz. cartridges and 20.3 oz. sausages

5. Standards: Federal Specification TT-S-230c. Type II, Class A. ASTM C-920-87, Type S, Class 25, Use NT, M, and A.

C. RCS20 SILICONIZED ACRYLIC SEALANT

1. Basic Uses: Sealant is designed to provide water and weather protection by airtight seal when used on interior and exterior surfaces. Sealant can be used for caulking window and door frames, vinyl, steel, aluminum, plywood siding, drywall, baseboards, bathroom and kitchen fixtures, primed fiber cement siding, and conventional stucco.

   a. Sealant is useful as an acoustical sealant in construction of walls, windows, doors, ceilings, and floors to reduce sound transmission in wall partitions to maintain specified STC and OITC values.

2. Limitations:

   a. Do not use for structural repairs.

   b. Not recommended for below grade or water immersion applications.

   c. Not to be used in applications where the surrounding materials will exceed sustained temperatures of 180 degrees F.

   d. Do not expose to water or rain for at least 24 hours after application.

   e. Application is recommended when temperature of air and surface is 50 degrees F or above for a 24 hour period.

   f. Do not apply if relative humidity is above 90%.

   g. Do not freeze.

3. Packaging & Sizes: Sealant is available in 10.1 fl. oz. plastic caulking cartridges and 5-gallon plastic pails.

4. Standards:

   a. Meets or exceeds the requirements of ASTM C834, Type C (clear) and Type OP (opaque colors), Grade -18 degrees C.

   b. Meets or exceeds the requirements of ASTM E90 and C919.

3.0 EXECUTION

3.1 CAULKING SCHEDULE

A. Carefully study the Drawings and furnish and install the proper caulking at each point where called for on the Drawings plus at all other points where caulking is required to maintain the continued integrity of the watertight barrier.

3.2 SURFACE CONDITIONS

A. Inspection:

1. Prior to all caulking, carefully inspect the surface to which caulking is to be applied and verify that they are clean, sound, and free from deleterious material which might adversely affect the bond.

2. Verify that caulking may be installed in accordance with the manufacturer's recommendations.

B. Corrections:

1. Clean all surfaces as necessary in accordance with manufacturer’s instructions.

2. In the event of discrepancy, immediately notify the Architect and do not proceed with installation of caulking in areas of discrepancy until all such discrepancies have been resolved.

a. Non-structural shrinkage cracks larger than 1/16" and up to 1/4" must be treated and repaired accordingly prior to sealant application.

3. Use of a suitable latex or oil-based primer prior to application of sealant may be appropriate and shall be applied in accordance with manufacturer’s instructions and per the Architect’s approval.

3.3 INSTALLATION

A. Install caulking in strict accordance with the manufacturer's recommendations, taking care to produce beads of proper width and depth, to tool as recommenced by the manufacturer, and to immediately remove all surplus caulking.

B. Joint Design:

1. Suitable for all properly designed joints following accepted engineering practices.

2. Joint width must be a minimum of 4 times the anticipated movement.

C. Surface Preparation:

1. All joints must be absolutely clean and all curing compounds, old caulks, grease, waterproofing compounds, etc., must be removed.

2. For non-porous surfaces such as glass, metal, etc., cleaning with M.E.K. or Toluene is recommended.

3. Polyethylene rod or polyurethane foam is recommended as a joint-filler and back-up material. Fillers treated with bituminous products, grease or oil, should not be used. Where present, they must be removed or separated by vinyl tape or polyethylene film. Some surfaces may require the Elasto-Thane Primer.

a. Backer rod must be installed when joint is larger than 3/8".

D. Application:

1. Apply by caulking gun, hand-pressure-type, or pour from container.

2. Bulk sealant can be applied by pumping equipment, trowel or putty knife.

3. Press firmly into joint to assure good contact to the sides of the joint.

3.4 CLEAN UP

A. Upon completion, remove all debris resulting from work of this Section.

3.5 WARRANTY

A. Product delivered shall be free of defects.

B. All products proven to be defective in manufacture will be replaced at no cost to the County. Since the use of these products is beyond our control we cannot assume any risk or liability for results obtained, nor can we accept damages in excess of the purchase price of these products.

END OF SECTION

SECTION 079500 – EXTERIOR EXPANSION JOINT

1.0 GENERAL

1.1 SUMMARY

A. Furnish Expansion Joint Systems in accordance with the drawings and general provisions of the Contract.

1.2 WORK INCLUDED

A. Furnish complete JointMaster/InPro Corporation Expansion Joint Systems.

1. Roof expansion joint systems.

1.3 RELATED WORK

A. Related work which is specified elsewhere.

1. Cast-In-Place Concrete: Section 033000.
2. Structural Steel: Section 051200.
3. Sheet Metal Flashing and Trim: Section 076200.
4. Gypsum Wallboard: Section 092600.

1.4 REFERENCES

A. Publications listed herein are part of this specification. See below for standards where applicable to the product listed:

1. American Society for Testing and Materials (ASTM):

a. ASTM B 221, Standard Specifications for Aluminum and Aluminum-Alloy Extruded Bars, Rods, Wire, Shapes, and Tubes.

b. ASTM B 209 “Standard Specifications for Aluminum and Aluminum Alloy Sheet and Plate.”

c. ASTM E1399 “Cyclic Movement and Measuring of Minimum/Maximum Joint Widths of Architectural Joint Systems.”

1.05 DEFINITIONS

A. Define industry and product terms as necessary.

1.6 SYSTEM DESCRIPTION

A. Joint systems shall permit limited movement of joint without disengagement.

1. Specify z-axis joint movement (lateral).

B. Fire Rated Assemblies shall meet requirements of Underwriters Laboratories, in accordance with [ANSI/U.L. No. 263 and ASTM E 119/E 814] [UL 2079] [including hose stream test at full rated period]. Underwriter's Laboratories shall classify assemblies. Fire rating shall be not less than the fire rating of adjacent construction.

1.7 QUALITY ASSURANCE

A. Manufacturer: Furnish assemblies from one (1) manufacturer with a minimum of five (5) years of experience in the design, engineering and fabrication of expansion joint systems.

B. Installer: Firm with not less than three (3) years of successful experience in the installation of systems similar to those required by this project and acceptable to the manufacturer of the system.

1.8 SUBMITTALS

A. Manufacturer's specifications, technical data, installation instructions, and detail drawings for each system.

B. Certificates or other documentation confirming UL approved compliance with fire resistance rating of fire barrier assemblies.

C. Sample of specified systems where required.

1.9 DELIVERY AND STORAGE

A. Provide temporary protective covers on finished surfaces.

B. Deliver joint systems to jobsite in new, clean, unopened cartons or crates of sufficient size and strength to protect materials during transit.

C. Store components in original containers in a clean, dry location. Inspect materials upon arrival, monitor for adverse environmental impacts.

1.10 SEQUENCING

A. Submittals shall be completed and submitted within a reasonable amount of time after award of subcontract.

B. Subcontract for the work of this section shall be planned to allow sufficient time for manufacturer's production and delivery scheduling.

1.11 WARRANTY

A. Standard JointMaster/InPro Corporation limited warranty against material and manufacturing defects for a period of not less than three (3) years when installed in accordance with manufacturer's recommendations.

2.0 PRODUCTS

2.1 MANUFACTURER

A. JointMaster/InPro Corporation, S80 W18766 Apollo Drive, Muskego, WI 53150 USA, Phone: (800) 222-5556, Fax: (888) 715-8407, Email: service@inprocorp.com or approved equal.

2.2 MATERIALS

A. Aluminum: ASTM B 221, Alloy 6063-T6, Alloy 5052-H32

B. Fasteners, accessories and other materials required for complete installation in accordance with the manufacturer's instructions.

C. Centering Bars (where required) shall be fabricated from zinc coated steel.

2.3 EXTERIOR JOINT SYSTEMS FOR ROOFS

A. JointMaster 600 Series – Aluminum frame with continuous aluminum center plate.

B. JointMaster 600 Series - Galvanized flange with EPDM bellows adhered to backer material.

C. JointMaster 600 Series – System Profiles:

1. Roof Systems – Curb, and Roof/Wall, Parapet to Parapet

a. 672-G01 or G02, 4" [102mm] metal flanged bellows system, suitable for canted curb conditions. System can be surface mounted without cants.
b. 674-G01 or G02, 4" [102mm] bent metal flanged bellows system, suitable for various curb conditions.

D. JointMaster 600 Series - System Accessories:

1. Factory Fabricated Transitions for bellows systems.

2.4 FABRICATION

A. Field assemble components provided in standard lengths with pre-packaged fasteners and accessories.

B. Field or Factory Fabricate special transitions and corner fittings as required.

2.5 FINISHES

A. Aluminum:

1. Metal Roofs (651/661/691): Standard Mill finish

3.0 EXECUTION

3.1

A. Verify that structural gap and curb dimensions are in conformance with manufacturer's submittal data.

3.2 INSTALLATION

A. Joint systems: Install in accordance with manufacturer's instructions. Align work plumb, level and flush with adjacent surfaces. Rigidly anchor to substrate. Allowances should be made where actual structural gap at time of installation varies from nominal design gap.

B. Set centering bars @ 18 inches on center. Centering bars shall engage in the frame.

C. Fire Rated Assemblies: Where required, install to manufacturer's instructions.

D. Vapor Barrier: Where required, install to manufacturer's instructions. Provide drainage fittings where required.

3.3 PROTECTION AND CLEANING

A. Protect installation from damage by work of others.

B. At completion of the installation, clean exposed surfaces with non-solvent cleaner.

END OF SECTION

Division 8:
Openings

SECTION 081100 - METAL DOORS AND FRAMES

1.0 GENERAL

1.1 SUMMARY

A. This Section includes all labor, materials, equipment, operations, or methods listed, mentioned or scheduled on the plans and/or herein specified, including all incidentals necessary and required for completion of work under this Section.

1. Provision of non-fire rated steel doors for exterior locations.

2. Provision of steel frames for interior and exterior doors.

1.2 RELATED SECTIONS

A. Documents affecting work of this Section include, but are not necessarily limited to, General Conditions, Special Conditions and Division 1 of these Contract Documents.

B. Section 055000 - Metal Fabrications: Provision of grout.

C. Section 079000 - Sealants and Caulking: Provision of acoustical sealant

D. Section 081416 - Flush Wood Doors: Provision of flush wood doors.

E. Section 088100 - Glass and Glazing: Provision of glass and glazing.

F. Section 099100 - Painting: For field painting primed doors and frames.

G. Products Installed But Not Furnished Under This Section

1. Section 087100 - Door Hardware: Furnishing of finish hardware.

1.3 REFERENCES

A. ANSI - American National Standards Institute

1. A224.1 - Test Procedure and Acceptance Criteria for Prime Painted Steel Surfaces for Steel Doors and Frames.

B. ASTM - American Society for Testing and Materials

1. A153 - Standard Specification for Zinc Coating (Hot-Dip) on Iron and Steel Hardware.

2. A366 - Standard Specification for Steel, Carbon, Cold-Rolled Sheet, Commercial Quality.

3. A525 - Standard Specification for General Requirements for Steel Sheet, Zinc Coated (Galvanized) by the Hot-Dip Process.

4. A526 - Standard Specification for Steel Sheet, Zinc-Coated (Galvanized) by the Hot-Dip Process, Commercial Quality.

5. A568 - Standard Specification for General Requirements for Steel, Sheet, Carbon and High-Strength, Low Alloy, Hot-Rolled and Cold Rolled.

6. A569 - Standard Specification for Steel, Carbon (0.15 Maximum, Percent Hot-Rolled Sheet and Strip, Commercial Quality.

7. A642 - Standard Specifications for Steel Sheet, Zinc-Coated (Galvanized) by the Hot-Dip Process, Drawing Quality, Special Killed.

8. E90 - Test Method for Laboratory Measurement of Airborne-Sound Transmission Loss of Building Partitions.

9. E152 - Test Methods for Fire Tests of Door Assemblies.

10. E413 - Classification for Rating Sound Insulation.

C. DHI - Door and Hardware Institute

1. RL - Recommended Locations for Builder’s Hardware on Standard Steel Doors and Frames.

D. NFPA - National Fire Protection Association

1. 80 - Fire Doors and Windows.

E. SDI - Steel Door Institute

1. 100 - Recommended Specifications Standard Steel Doors and Frames.

2. 105 - Recommended Erection Instructions for Steel Frames.

3. 112 - Galvanized Standard Steel Doors and Frames.

4. 117 - Manufacturing Tolerances Standard Steel Doors and Frames.

F. UL - Underwriters Laboratories, Inc.

1.4 SUBMITTALS

A. Product Data: Submit product data for each type of door and frame specified, including details of construction, materials, dimensions, hardware preparation, core, label compliance, sound ratings, profiles and finishes.

B. Shop Drawings: Submit shop drawings showing fabrication and installation of standard steel doors and frames referenced to the Architect's door mark and hardware group. Include details of each frame type, elevations of door design types, conditions at openings, details of construction, location and installation requirements of door and frame hardware and reinforcements, and details of joints and connections. Show anchorage and accessory items.

1. Provide schedule of doors and frames using same reference numbers for details and openings as those on the Contract Drawings.

2. Indicate coordinate of glazing frames and stops with glass and glazing requirements.

1.5 DELIVERY, STORAGE, AND HANDLING

A. Acceptance at Site

1. Deliver doors and frames cardboard-wrapped or crated to provide protection during transit and job storage.

2. Inspect doors and frames upon delivery for damage. Minor damages may be repaired provided refinished items are equal in all respects to new work and acceptable to the Architect; otherwise, remove and replace damaged items as directed.

B. Storage and Protection: Store doors and frames at building site under cover. Place units on minimum 4 inches high wood blocking. Avoid use of non- vented plastic or canvas shelters which could create humidity chamber. If cardboard wrapper on door becomes wet, remove carton immediately. Provide 1/4-inch spaces between stacked doors to promote air circulation.

2.0 PRODUCTS

2.1 MANUFACTURERS

A. Acceptable Manufacturers: Republic Builders Products; Steelcraft Manufacturing Co., or equal.

2.2 MATERIALS

A. Hot-Rolled Steel Sheets and Strip: Commercial quality carbon steel, pickled and oiled, complying with ASTM A569 and ASTM A568.

B. Cold-Rolled Steel Sheets: Commercial quality carbon steel, complying with ASTM A366 and ASTM A568.

C. Galvanized Steel Sheets: Zinc-coated carbon steel sheets of commercial quality, complying with ASTM A526, or drawing quality, ASTM A642, hot dipped galvanized in accordance with ASTM A525 with A60 or G60 coating designation, mil phosphatized.

D. Supports and Anchors: Fabricate of not less than 18 gauge sheet steel; galvanized where used with galvanized frames.

E. Inserts, Bolts, and Fasteners: Manufacturer’s standard units. Where items are to

be built in at exterior walls, hot-dip galvanize in compliance with ASTM A153, Class C or D as applicable.

F. Shop Applied Paint: Apply after fabrication.

1. Primer: Rust-inhibitive enamel or paint, either air-drying or baking, suitable as a base for specified finish paints complying with ANSI A224.1.

G. Finish: As specified in Section 099100.

2.3 DOORS

A. Provide metal doors of SDI grades and models specified below or as indicated on the Drawings or schedules:

1. Interior Doors: SD1100, Grade HI, Model 1, minimum 18 gauge cold-rolled sheet steel faces.

2. Exterior Doors: SD1100, Grade III, extra heavy-duty, Model 1, minimum 16 gauge galvanized steel faces.

B. Door Cores

1. Core Stiffeners: Vertical steel stiffeners or steel channel grid.

2. Core Filler

a. Sound deadening mineral composition, incombustible, moisture resistant, chemically inert in accordance with reviewed manufacturer's recommendations.

b. Fire Resistive; Labeled door core material shall conform to requirements of labeling authority.

C. Frames

1. Provide metal frames for doors and windows of types and styles as indicated on the Drawings and schedules. Conceal fastenings, unless otherwise indicated.

a. Interior: Fabricate fully welded frames of minimum 18 gauge cold-rolled steel.

b. Exterior. Fabricate fully welded frames of minimum 14 gauge hot-rolled steel and galvanized.

c. Interior Acoustic Frames: Fabricate fully welded frames of minimum 16 gauge cold rolled steel, padded with mineral wool insulation.

2. Door Silencers: Except on weatherstripped and smoke gasketed frames, drill stops to receive 3 silencers on strike jambs of single door frames and 2 silencers on heads of double door frames,

D. Hardware: As specified in Section 087100.

E. Glass and Glazing: As specified in Section 088100.

F. Acoustical Sealant; As specified in Section 079000.

2.4 FABRICATION

A. Fabricate steel door and frame units to be rigid, neat in appearance and free from defects, warp or buckle. Wherever practicable, fit and assemble units in manufacturer’s plant. Clearly identify work that cannot be permanently factory assembled before shipment, to assure proper assembly at Project site. Comply with SD1100 requirements.

1. Internal Construction: Manufacturer's standard vertical steel stiffeners or unitized steel grid with internal sound deadener on inside of face sheets in accordance with SDI standards.

2. Clearances: Not more than 1/8-inch at jambs and heads except between non-fire rated pairs of doors not more than 1/4-inch. Not more than 3/4-inch at bottom.

B. Fabricate exposed faces of doors and panels, including stiles and rails of nonflush units, from only cold-rolled steel.

C. Tolerances: Comply with SD1117.

D. Fabricate frames, concealed stiffeners, reinforcement, edge channels, louvers and moldings from either cold-rolled or hot-rolled steel.

E. Fabricate exterior doors, panels and frames from galvanized sheet steel in accordance with SD1112. Close top and bottom edges of exterior doors as integral part of door construction or by addition of minimum 14 gauge inverted galvanized steel channels.

F. Exposed Fasteners: Unless otherwise indicated, provide countersunk flat or oval heads for exposed screws and bolts.

G. Hardware Preparation: Prepare doors and frames to receive mortised and concealed hardware in accordance with final Door Hardware Schedule and templates provided by hardware supplier. Comply with applicable requirements of ANSI A115 Series Specifications for door and frame preparation for hardware.

H. Reinforce doors and frames to receive surface applied hardware. Drilling and tapping for surface applied hardware may be done at Project site.

I. Locate hardware as indicated on final shop drawings or, if not indicated, in accordance with DHI RL.

J. Shop Painting: Clean, treat and paint exposed surfaces of steel door and frame units, including galvanized surfaces.

1. Clean steel surfaces of mill scale, rust, oil, grease, dirt and other foreign materials before application of paint.

2. Apply shop coat of prime paint of even consistency to provide a uniformly finished surface ready to receive finish paint.

K. Glazing Stops: Minimum 20 gauge steel.

1. Provide non-removable stops on outside of exterior doors and on secure side of interior doors for glass, louvers and other panels in doors.

2. Provide screw applied removable glazing beads on inside of glass, louvers, and other panels in doors.

2.5 FINISHES

A. Finish Painting: As specified in Section 099100.

3.0 EXECUTION

3.1 INSTALLATION

A. General: Install steel doors, frames, and accessories in accordance with final shop drawings, manufacturer's data, and as herein specified.

B. Placing Frames: Comply with provisions of SD1105, unless otherwise indicated.

1. Place frames prior to construction of enclosing walls and ceilings. Set frames accurately in position, plumbed, aligned and braced securely until permanent anchors are set. After wall construction is completed, remove temporary braces and spreaders leaving surfaces smooth and undamaged.

2. In metal stud partitions, install at least 3 wall anchors per jamb at hinge and strike levels. In closed steel stud partitions, attach wall anchors to studs with screws.

3. Pack acoustic door frames with mineral wool.

C. Door Installation: Fit hollow metal doors accurately in frames, within clearances specified in SD1100.

1. Install fire rated doors with clearances as specified in NFPA Standard No. 80.

3.2 ADJUST AND CLEAN UP

A. Prime Coat Touch-Up: Immediately after erection, sand smooth any rusted or damaged areas of prime coat and apply touch-up of compatible air-drying primer.

B. Final Adjustments: Check and readjust operating hardware items, leaving steel doors and frames undamaged and in complete and proper operating condition.

END OF SECTION

SECTION 081416 – FLUSH WOOD DOORS

1.0 GENERAL

1.1 SUMMARY

A. This Section includes all labor, materials, equipment, operations, or methods listed, mentioned or scheduled on the plans and/or herein specified, including all incidentals necessary and required for completion of work under this Section.

B. Provision of non-fire rated flush solid core doors with wood veneer faces as shown on project Drawings and as specified herein.

1.2 RELATED SECTION

A. Documents affecting work of this Section include, but are not necessarily limited to, General Conditions, Special Conditions and Division 1 of these Contract Documents.

B. Section 081100 - Metal Doors and Frames: Provision of steel door frames.

C. Products Installed But Not Furnished Under This Section

1. Section 087100 - Door Hardware: Furnishing of finish hardware.

1.3 REFERENCES

A. ASTM - American Society for Testing and Materials

1. E152 - Test Methods for Fire Tests of Door Assemblies.

B. AWI - American Woodwork Institute

C. DHI - Door and Hardware Institute

1. A115-W - Wood Door Preparation Standards, a set containing A115-W1 - A115-W9.

2. WDHS-3 - Recommended Hardware Locations for Wood Flush Doors.

D. NFPA - National Fire Protection Association 1. 80 - Fire Doors and Windows.

E. NWWDA - National Wood Window and Door Association

1. I.S.1-A - Architectural Wood Flush Doors.

F. UL - Underwriters Laboratory, Inc.

1.4 SUBMITTALS

A. Product Data: Submit product data for each type of door, including details of core and edge construction, trim for openings and louvers, and factory- finishing specifications.

B. Shop Drawings: Submit shop drawings indicating location and size of each door referenced to the Architect's door mark and hardware group, elevation of each kind of door, details of construction, location and extent of hardware blocking, fire ratings, requirements for factory finishing and other pertinent data.

1. For factory-machined doors, indicate dimensions and locations of cutouts for locksets and other cutouts adjacent to light and louver openings.

2. Samples for verification in the form and size indicated below;

a. Corner sections of doors approximately 12 inches square with door faces and edgings and final finish representing the typical range of color and grain for each species of veneer and solid lumber required.

b. Frames for light openings, 6 inches long, for each material, type, and finish required.

1.5 QUALITY ASSURANCE

A. Quality Standard

1. NWWDA Quality Standard: I.S.1-A.

1.6 DELIVERY, STORAGE AND HANDLING

A. Packing and Shipping: Identify each door with individual opening numbers as designated on shop drawings, using temporary, removable or concealed markings. Use the Architect's door numbering system.

B. Storage and Protection: Protect doors during transit, storage, and handling to prevent damage, soiling, and deterioration. Comply with requirements of referenced standard and manufacturer's instructions.

1.7 PROJECT CONDITIONS

A. Environmental Requirements: Do not deliver or install doors until building is enclosed, wet work is complete, and HVAC system is operating and will maintain temperature and relative humidity at occupancy levels during the remainder of the construction period.

1.8 WARRANTY

A. General Warranty: Door manufacturer's warranty specified in this Article shall not deprive the Owner of other rights the Owner may have under other provisions of the Contract Documents and shall be in addition to, and run concurrent with, other warranties made by the Contractor under requirements of the Contract Documents.

B. Door Manufacturer's Warranty: Submit written agreement on door manufacturer's standard form signed by manufacturer, Installer, and Contractor, agreeing to repair or replace defective doors that have warped (bow, cup, or twist) more than 1/4-inch in a 42 inch by 84 inch section or that show telegraphing of core construction in face veneers exceeding 0.01-inch in a 3 inch span, or do not conform to tolerance limitations of referenced quality standards.

1. Warranty shall also include installation and finishing that may be required due to repair or replacement of defective doors where defect was not apparent prior to hanging.

2. Warranty shall be in effect during the following period of time after date of Substantial Completion, Beneficial Occupancy or Notice of Completion, whichever is earlier.

a. Solid Core Interior Doors: Life of installation.

2.0 PRODUCTS

2.1 MANUFACTURERS

A. Acceptable Manufacturers: Algoma Hardwoods, Inc.; Eggers Industries, Architectural Door Division; Marshfield DoorSystems, Inc., or equal.

2.2 MATERIALS

A. Interior Solid Core Doors for Transparent Finish

1. Faces: Cherry, quarter sliced.

2. Grade: Premium.

3. Construction: 5 plies.

4. Thickness: 1-3/4 inch.

5. Core: Particleboard core.

6. Bonding: Stiles and rails bonded to core, then entire unit abrasive planed before veneering.

2.3 FABRICATION

A. Fabricate flush wood doors to comply with the following requirements:

1. Factory machine doors for hardware that is not surface applied. Locate hardware to comply with DHI WDHS-3. Comply with final hardware schedules, door frame shop drawings, DHI A115-W series standards, and hardware templates.

a. Coordinate measurements of hardware mortises in metal frames to verify dimensions and alignment before proceeding with factory machining.

B. Openings: Factory cut and trim openings through doors to comply with applicable requirements of referenced standards for kinds of doors required.

1. Light Openings: Trim openings with moldings of square profile matching hardwood.

2.4 SHOP PRIMING

A. Doors for Transparent Finish: Shop seal faces and edges of doors for transparent finish with stain, other required pretreatments and finish coats.

B. Doors for Opaque Finish: Shop seal faces and edges of doors for opaque finish with primer compatible with finish paint specified in Section 099100.

2.5 FINISHES

A. Transparent Finish

1. Grade: Premium.

2. Finish: AWI System TR-2 catalyzed lacquer.

3. Staining: Match approved sample for color.

4. Effect: Open grain finish.

5. Sheen: Satin.

3.0 EXECUTION

3.1 EXAMINATION

A. Examine installed door frames prior to hanging door

1. Verify that frames comply with indicated requirements for type, size,

location, and swing characteristics and have been installed with plumb jambs and level heads.

2. Reject doors with defects.

B. Do not proceed with installation until unsatisfactory conditions have been corrected.

3.2 INSTALLATION

A. Hardware: See Section 087100.

B. Manufacturer's Instructions: Install wood doors to comply with manufacturer's instructions and referenced quality standard and as indicated.

C. Job-Fit Doors: Align and fit doors in frames with uniform clearances and bevels as indicated below; do not trim stiles and rails in excess of limits set by manufacturer or permitted with fire rated doors. Seal cut surfaces after fitting.

1. Fitting Clearances for Non-Fire Rated Doors: Provide 1/8-inch at jambs and heads; 1/16-inch per leaf at meeting stiles for pairs of doors, and 1/8-inch from bottom of door to top of decorative floor finish or covering. Where threshold is shown or scheduled, provide 1/4-inch clearance from bottom of door to top of threshold.

3. Bevel non-fire rated doors 1/8-inch in 2 inches at lock and hinge edges.

3.3 ADJUSTING AND PROTECTION

A. Operation: Rehang or replace doors that do not swing or operate freely.

B. Finished Doors: Refinish or replace doors damaged during installation.

C. Protect doors as recommended by door manufacturer to ensure that wood doors will be without damage or deterioration at the time of Substantial Completion.

END OF SECTION

SECTION 081423 – CLAD WOOD DOORS

1.0 GENERAL

1.1 SUMMARY

A. This Section includes all labor, materials, equipment, operations, or methods listed, mentioned or scheduled on the plans and/or herein specified, including all incidentals necessary and required for completion of work under this Section.

B. Provision of non-fire rated flush solid core doors with plastic laminate faces as shown on project Drawings and as specified herein.

1.2 RELATED SECTION

A. Documents affecting work of this Section include, but are not necessarily limited to, General Conditions, Special Conditions and Division 1 of these Contract Documents.

B. Section 081100 - Metal Doors and Frames: Provision of steel door frames.

C. Products Installed But Not Furnished Under This Section

1. Section 087100 - Door Hardware: Furnishing of finish hardware.

1.3 REFERENCES

A. ASTM - American Society for Testing and Materials

1. E152 - Test Methods for Fire Tests of Door Assemblies.

B. AWI - American Woodwork Institute

C. DHI - Door and Hardware Institute

1. A115-W - Wood Door Preparation Standards, a set containing A115-W1 - A115-W9.

2. WDHS-3 - Recommended Hardware Locations for Wood Flush Doors.

D. NFPA - National Fire Protection Association 1. 80 - Fire Doors and Windows.

E. NWWDA - National Wood Window and Door Association

1. I.S.1-A - Architectural Wood Flush Doors.

F. UL - Underwriters Laboratory, Inc.

G. NEMA - National Electric Manufacturers Association

1. LD3 - High Pressure Decorative Laminates.

1.4 SUBMITTALS

A. Product Data: Submit product data for each type of door, including details of core and edge construction, trim for openings and louvers, and factory- finishing specifications.

B. Shop Drawings: Submit shop drawings indicating location and size of each door referenced to the Architect's door mark and hardware group, elevation of each kind of door, details of construction, location and extent of hardware blocking, fire ratings, requirements for factory finishing and other pertinent data.

1. For factory-machined doors, indicate dimensions and locations of cutouts for locksets and other cutouts adjacent to light and louver openings.

2. Samples for verification in the form and size indicated below;

a. Corner sections of doors approximately 12 inches square with door faces and edgings and final finish representing the typical range of color and grain for each species of veneer and solid lumber required.

b. Frames for light openings, 6 inches long, for each material, type, and finish required.

3. Plastic Laminate: 12 inches by 12 inches, each color and pattern.

1.5 QUALITY ASSURANCE

A. Quality Standard

1. NWWDA Quality Standard: I.S.1-A.

1.6 DELIVERY, STORAGE AND HANDLING

A. Packing and Shipping: Identify each door with individual opening numbers as designated on shop drawings, using temporary, removable or concealed markings. Use the Architect's door numbering system.

B. Storage and Protection: Protect doors during transit, storage, and handling to prevent damage, soiling, and deterioration. Comply with requirements of referenced standard and manufacturer's instructions.

1.7 PROJECT CONDITIONS

A. Environmental Requirements: Do not deliver or install doors until building is enclosed, wet work is complete, and HVAC system is operating and will maintain temperature and relative humidity at occupancy levels during the remainder of the construction period.

1.8 WARRANTY

A. General Warranty: Door manufacturer's warranty specified in this Article shall not deprive the Owner of other rights the Owner may have under other provisions of the Contract Documents and shall be in addition to, and run concurrent with, other warranties made by the Contractor under requirements of the Contract Documents.

B. Door Manufacturer's Warranty: Submit written agreement on door manufacturer's standard form signed by manufacturer, Installer, and Contractor, agreeing to repair or replace defective doors that have warped (bow, cup, or twist) more than 1/4-inch in a 42 inch by 84 inch section or that show telegraphing of core construction in face veneers exceeding 0.01-inch in a 3 inch span, or do not conform to tolerance limitations of referenced quality standards.

1. Warranty shall also include installation and finishing that may be required due to repair or replacement of defective doors where defect was not apparent prior to hanging.

2. Warranty shall be in effect during the following period of time after date of Substantial Completion, Beneficial Occupancy or Notice of Completion, whichever is earlier.

   a. Solid Core Interior Doors: Life of installation.

2.0 PRODUCTS

2.1 MANUFACTURERS

A. Wood Door:

1. Acceptable Manufacturers: Algoma Hardwoods, Inc.; Eggers Industries, Architectural Door Division; Marshfield DoorSystems, Inc., or equal.

B. Laminated Plastic:

1. Wilsonart International, 2400 Wilson Place, Temple, TX, 76503, 1-800-433-3222, www.wilsonart.com.

2.2 MATERIALS

A. Interior Solid Core Doors for Laminate Finish

1. Faces: Plastic Laminate

2. Grade: Premium.

3. Construction: 5 plies.

4. Thickness: 1-3/4 inch.

5. Core: Particleboard core.

6. Bonding: Stiles and rails bonded to core, then entire unit abrasive planed

before veneering.

E. Hardware: As specified in Section 087100.

F. Glass: As specified in Section 088100.

2.3 FABRICATION

A. Fabricate flush wood doors to comply with the following requirements:

1. Factory machine doors for hardware that is not surface applied. Locate hardware to comply with DHI WDHS-3. Comply with final hardware schedules, door frame shop drawings, DHI A115-W series standards, and hardware templates.

a. Coordinate measurements of hardware mortises in metal frames to verify dimensions and alignment before proceeding with factory machining.

B. Openings: Factory cut and trim openings through doors to comply with applicable requirements of referenced standards for kinds of doors required.

1. Light Openings: Trim openings with moldings of square profile matching hardwood.

2.5 FINISHES

A. Plastic Laminate

1. High pressure plastic laminate in accordance with NEMA LD-1 standards unless otherwise indicated.

a. All door surfaces, including door edges shall be 0.030-inch minimum thickness high pressure plastic laminate.

b. Color: WilsonArt Standard Laminate 4744-60 Karratha Brush

3.0 EXECUTION

3.1 EXAMINATION

A. Examine installed door frames prior to hanging door

1. Verify that frames comply with indicated requirements for type, size, location, and swing characteristics and have been installed with plumb jambs and level heads.

2. Reject doors with defects.

B. Do not proceed with installation until unsatisfactory conditions have been corrected.

3.2 INSTALLATION

A. Hardware: See Section 087100.

B. Manufacturer's Instructions: Install wood doors to comply with manufacturer's instructions and referenced quality standard and as indicated.

C. Job-Fit Doors: Align and fit doors in frames with uniform clearances and bevels as indicated below; do not trim stiles and rails in excess of limits set by manufacturer or permitted with fire rated doors. Seal cut surfaces after fitting.

1. Fitting Clearances for Non-Fire Rated Doors: Provide 1/8-inch at jambs and heads; 1/16-inch per leaf at meeting stiles for pairs of doors, and 1/8-inch from bottom of door to top of decorative floor finish or covering. Where threshold is shown or scheduled, provide 1/4-inch clearance from bottom of door to top of threshold.

3. Bevel non-fire rated doors 1/8-inch in 2 inches at lock and hinge edges.

3.3 ADJUSTING AND PROTECTION

A. Operation: Rehang or replace doors that do not swing or operate freely.

B. Finished Doors: Refinish or replace doors damaged during installation.

C. Protect doors as recommended by door manufacturer to ensure that wood doors will be without damage or deterioration at the time of Substantial Completion.

END OF SECTION

SECTION 083113 – ACCESS DOORS AND FRAMES

1.0 GENERAL

1.1 SUMMARY

A. This Section includes all labor, materials, equipment, operations, or methods listed, mentioned or scheduled on the plans and/or herein specified, including all incidentals necessary and required for completion of work under this Section.

B. Provision of access doors and frames as shown on project Drawings and as specified herein.

1.2 RELATED SECTIONS

A. Documents affecting work of this Section include, but are not necessarily limited to, General Conditions, Special Conditions and Division 1 of these Contract Documents.

B. Section 054500 - Metal Support Assemblies: Provision of framing.

C. Section 092900 - Gypsum Board: Provision of gypsum board.

D. Section 099000 - Painting: For finish painting.

E. Division 23 - Heating, Ventilating and Air-Conditioning (HVAC): Provision of access doors into ducts.

F. Division 26 - Electrical: For electrical requirements.

1.3 REFERENCES

A. UL - Underwriters Laboratories, Inc.

1.4 SUBMITTALS

A. Product Data: Submit manufacturer’s data completely describing products.

B. Shop Drawings: Submit drawings showing attachment to structure in each typical condition. Refer to Divisions 23 and 26 regarding requirements for showing locations of access doors provided under those Divisions.

1.5 DELIVERY, STORAGE AND HANDLING

A. Packaging and Shipping: Identify type and size of each door.

B. Storage and Protection

1. Deliver and store packaged products in original containers with seals unbroken and labels intact until time of use.

2. Deliver products only after proper facilities are available; handle carefully to prevent damage and store on dean concrete surface or raised platform in safe, dry area.

2.0 PRODUCTS

2.1 MANUFACTURERS

A. Acceptable Manufacturers: Milcor, Inc.; Karp Associates, Inc.; J. L. Industries, or equal.

2.2 MATERIALS

A. Non-Fire Rated

1. General; Equip with screw driver turned locks.

2. Type 1: Recessed steel door and flanged frame for gypsum board walls and ceiling installations.

a. Manufacturer Acudor, “Model DW-5015"; Karp Associates, Inc., “RDW", or equal.

B. Finishes

1. Steel: Chemically etch and apply baked-on rust inhibitive zinc dust prime coat.

2. Stainless Steel: Manufacturer’s standard #4 finish.

3. Finish Painting: As specified in Section 099100.

3.0 EXECUTION

3.1 EXAMINATION

A. Examine construction to receive access door and verify dimensions and other supporting or adjoining conditions.

B. Do not install doors until unsatisfactory conditions have been corrected.

3.2 PREPARATION

A. Coordinate details with other work supporting, adjoining or requiring access doors.

B. Verify location of items requiring access so that access door location will be compatible with planned finishing of spaces and the location of other wall or ceiling mounted equipment or fixtures.

3.3 INSTALLATION

A. Install access doors in accordance with manufacturer's instructions and at locations authorized by the Architect in accordance with requirements for work of Divisions 23 and 26.

B. Securely attach frames to supporting work and ensure doors operate smoothly and are free from warp, twist and distortion.

3.4 ADJUSTING AND CLEAN UP

A. Thoroughly clean surfaces of grease, oil, or other impurities, touch-up abraded prime coat, and otherwise prepare for finish painting where required.

END OF SECTION

SECTION 084213 – ALUMINUM-FRAMED ENTRANCE

1.0 GENERAL

1.1 SUMMARY

A. This Section includes all labor, materials, equipment, operations, or methods listed, mentioned or scheduled on the plans and/or herein specified, including all incidentals necessary and required for completion of work under this Section.

B. Provision of sliding door and sidelites as shown on project Drawings and as specified herein.

1.2 RELATED SECTIONS

A. Documents affecting work of this Section include, but are not necessarily limited to, General Conditions, Special Conditions and Division 1 of these Contract Documents.

B. Section 061000 - Rough Carpentry

C. Section 062000 - Finish Carpentry

D. Section 079000 - Sealants and Caulking

E. Section 087100 - Door Hardware: Provision of lock cylinder.

F. Section 088100 - Glass and Glazing

1.3 REFERENCES

A. ANSI - American National Standards Institute

1. A156.4 - American National Standard For Door Controls - Closers.

2. A156.10 - Power Operated Pedestrian Doors.

3. ANSI/UL 325 Standard for Door Operators and Systems.

B. ASTM - American Society for Testing and Materials

1. A123 - Standard Specification for Zinc (Hot-dip) Galvanized, Coatings on Iron and Steel Products.
2. B209 - Standard Specification for Aluminum and Aluminum-alloy Sheet and Plate.

3. B211 - Standard Specification for Aluminum and Aluminum Alloy Bars, Rods and Wire.

4. B221 - Standard Specification for Aluminum-alloy Extruded Bars, Rods, Wire, Shapes and Tubes.

5. E152 - Methods for Fire Tests of Door Assemblies.

6. E283 - Test Method for Rate of Air Leakage Through Exterior Windows, Curtain Walls, and Doors.

C. AWS - American Welding Society

D. NFPA - National Fire Protection Association

1. 80 - Fire Doors and Windows.

E. UL - Underwriters Laboratories, Inc.

1.4 DEFINITIONS

A. Automatic Entrance Door: Consist of the manufacturer's assembled automatic entrance door unit including entrance doors and frame, door operator controls, powered door operators and accessories.

1.5 SYSTEM DESCRIPTION

A. Performance Requirements

1. General: Provide automatic entrance door assembly that complies with performance characteristics specified as demonstrated by testing the manufacturer's corresponding stock assemblies according to test methods indicated.

2. Thermal Movement: Design the automatic entrance door system to provide for expansion and contraction of the component materials. Door shall function normally over the specified temperature range.

a. The system shall be capable of withstanding a metal surface temperature range of 130 degrees Fahrenheit without buckling, failure of joint seals, undue stress on structural elements, damaging loads on fasteners, reduction of performance, stress on glass or other detrimental effects.

3. Transmission Characteristics: Provide automatic entrance door with jamb and head frames that limit air leakage to a rate not to exceed 1.25 cfm per sq. ft. of door area when tested in accordance with ASTM E283 at an inward pressure differential of 1.57 psf.

4. Operator. Provide operators that will open and close the door and maintain it in fully closed position when subjected to a 20 mph wind velocity or the equivalent inward differential pressure.

1.6 SUBMITTALS

A. Product Data: Submit product data for automatic entrance, including the manufacturer's standard details and fabrication methods and the following:

1. Data on operators, hardware and accessories.

2. Roughing-in diagrams.

3. Parts lists.

4. Data on finishes and recommendations for maintenance and cleaning of surfaces.

B. Shop Drawings: Submit shop drawings for automatic entrance, including:

1. Layout and installation details, including relationship to adjacent work.

2. Elevations at 1/4-inch = 1 foot scale.

3. Detail sections of typical composite members.

4. Anchors and reinforcement.

5. Hardware mounting heights.

6. Provisions for expansion and contraction.

7. Glazing details.

C. Submit wiring diagrams detailing wiring for power operator, signal and control systems differentiating clearly between manufacturer installed wiring and field installed wiring.

D. Hardware Schedule: Submit complete hardware schedule for automatic entrance door.

E. Quality Control Submittals

1. Test Reports: Provide certified test reports from a qualified independent testing laboratory showing that automatic entrance door systems have been tested in accordance with specified test procedures and comply with performance characteristics indicated.

F. Contract Closeout Submittals

1. Operation and Maintenance: Submit manufacturer's maintenance and service data for door operators and control system including the name, address and telephone number of the nearest authorized service representative.

1.7 QUALITY ASSURANCE

A. Qualifications

1. Installer: For installation of the automatic entrance door, engage an experienced installer who is an authorized representative of the manufacturer for both the installation and maintenance of the type of units required for this Project.

a. Maintenance Proximity: The installer shall maintain offices and repair or service facilities not more than 2 hours normal travel time from the Project site.

2. Manufacturer: Provide automatic entrance doors produced by a firm experienced in manufacturing systems that are similar to those indicated for this Project and that have a record of successful in-service performance.

B. BHMA Standard: Provide automatic entrance door unit that complies with applicable requirements of ANSI A156.10 {BHMA 1601), Power Operated Pedestrian Door Standard.

C. UL Standard: Provide powered door operators that comply with UL 325.

D. Design Criteria: The drawings indicate the size, profile and dimensional requirements of automatic entrance door required and are based on the specific type and model indicated. Automatic entrance doors by other manufacturers may be considered provided deviations in dimensions and profiles are minor and do not change the design concept as judged by the Architect. The burden of proof of equality is on the proposer.

E. Emergency Exit Door Automatic entrance door serving as a required means of egress shall comply with requirements of authorities having jurisdiction. Provide manufacturer's certification that door complies with these requirements. Submit ICBO Report.

1.8 PROJECT CONDITIONS

A. Field Measurements: Check openings by accurate field measurement before fabrication. Show recorded measurements on shop drawings. Coordinate fabrication schedule with construction progress to avoid delay of the Work.

1. Where necessary, proceed with fabrication without field measurements, and coordinate fabrication tolerances to ensure proper fit.

1.9 WARRANTY

A. Warranty: Submit a written warranty, executed by the manufacturer, agreeing to repair or replace components of the automatic entrance door system that fail in materials or workmanship within the specified warranty period. Failures include, but are not necessarily limited to:

1. Structural failures including excessive deflection, excessive leakage or air infiltration.

2. Faulty operation of operators and hardware.

3. Deterioration of metals, metal finishes, and other materials beyond normal weathering.

B. Warranty Period: 3 years after the date of Substantial Completion.

C. The warranty shall not deprive the Owner of other rights or remedies that the Owner may have under other provisions of the Contract Documents and is in addition to, and runs concurrent with, other warranties made by the Contractor under requirements of the Contract Documents.

2.0 PRODUCTS

2.1 MANUFACTURERS

A. Acceptable Manufacturer Horton, "Series 2000 Linear Drive", Stanley, Besam, Inc., or approved equal.

2.2 MATERIALS

A. Aluminum Members: Alloy and temper recommended by the manufacturer for strength, corrosion resistance and application of required finish. Comply ASTM B221 for aluminum extrusions; ASTM B209 for aluminum sheet or plate, and ASTM B211 for aluminum bars, rods and wire.

1. Provide main extrusions of not less than 0.125-inch wall thickness.

2. Provide extruded glazing stops and other applied trim extrusions with minimum wall thickness of 0.062-inch.

3. Bottom rail of doors and sidelights shall be 10 inches in height.

B. Fasteners: Provide aluminum, nonmagnetic stainless steel or other noncorrosive metal fasteners compatible with aluminum components, hardware, anchors and other items being fastened.

1. Reinforcement: Where fasteners screw-anchor into aluminum members less than 0.125-inch thick, reinforce the interior with aluminum or nonmagnetic stainless steel to receive screw threads, or provide standard noncorrosive pressed-in, splined grommet nuts.

2. Exposed Fasteners: Do not use exposed fasteners except for application of hardware. For application of hardware, use Phillips flat-head machine screws that match the finish of member or hardware being fastened.

C. Brackets and Reinforcements: Provide high-strength aluminum brackets and reinforcements. Where use of aluminum is not feasible, provide nonmagnetic stainless steel or hot-dip galvanized steel complying with ASTM A123.

D. Sliding Weatherstripping: Manufacturer's standard replaceable weatherstripping of wool, polypropylene or nylon woven pile with nylon fabric and aluminum strip backing. Sliding weatherstripping includes stripping at jamb rails, head rails, and meeting rails, wherever there is no stop or lap to receive compression weatherstripping.

E. Sealants and Gaskets: Use sealants and gaskets in fabrication, assembly and installation of the work that are recommended and guaranteed by manufacturer to remain permanently elastic, nonshrinking, and nonmigrating.

1. Refer to Section 079200 for sealants required for installation of door units at the Project site.

F. Glass and Glazing Materials: Comply with requirements of Section 088100.

2.3 HARDWARE

A. General: Refer to Section 087100 for requirements for hardware items other than those indicated to be provided by the automatic entrance door manufacturer.

B. Provide heavy duty hardware units as indicated, scheduled or required for operation of each entrance door, including rollers, carriers, bearings and the following items of sizes, number, and type recommended by the manufacturer for the service required. Finish hardware items to match finish of the door.

1. Center Pivot Sets: Manufacturer's standard extra heavy, full mortise center pivot sets with exposed parts of cast aluminum alloy. Comply with ANSI A156.4, Grade 1.

a. Top Pivot: Walking beam type with retractable pin and suitable bearings in door portion.

b. Bottom Pivot: Floor-mounted in cement case with multiple sets of ball or roller bearings in floor portion. Arm shall be of sufficient size to support weight of the door.

2. Single Point Lock: Sliding entrance door standard double cylinder type designed to permit emergency breakaway operation. Lock design shall not interfere with emergency egress breakaway of active eaves of door.

3. Push Bars: Manufacturer’s standard surface mounted aluminum push bars in finish matching door frame.

4. Key Switch: Key operated 3 position switch allowing door to be operated for 2-way traffic, 1-way traffic and off.

C. Install hardware, except surface mounted hardware, at the fabrication plant. Remove only as required for final finishing operation, and delivery and installation at the Project site.

2.6 ACCESSORIES

A. Sill Configuration at Sliding Entrance Doors; Provide recessed sill members and bottom guide system of configuration indicated.

1. Provide threshold across door opening and pin guide track system at

sidelights.

2.7 FABRICATION

A. General; Fabricate automatic entrance door system components to design, sizes and thicknesses indicated and to comply with indicated standards.

B. Prefabrication; Provide automatic entrance door as prefabricated packaged unit complete with door, frames, sidelight, door operators and related components, hardware and accessories. Complete fabrication, assembly, finishing, hardware applications and other work before shipment to Project site.

1. Preglaze door and frame units to greatest extent possible, in coordination with installation and hardware requirements.

2. Do not drill and tap for surface-mounted hardware items until time of installation at Project site.

3. Perform fabrication operations, including cutting, fitting, forming, drilling and grinding of metal work in manner which prevents damage to exposed finish surfaces. For hardware, perform these operations prior to application of finishes.

C. Welding: Comply with AWS recommendations. Grind exposed welds smooth to remove weld spatter and welding oxides. Restore mechanical finish.

1. Perform welding behind finished surfaces in such a manner as to minimize distortion and discoloration on the finished surface.

D. Reinforce the work as necessary for performance requirements and for support to the structure. Separate metal surfaces at moving joints with nonmetallic separators to prevent “freeze-up” of joints.

E. Dissimilar Metals: Separate dissimilar metals with bituminous paint, a suitable sealant, nonabsorptive plastic or elastomeric tape, or a gasket between the surfaces. Do not use coatings containing lead.

F. Maintain continuity of line and accurate relation of planes and angles. Provide secure attachment and support at mechanical joints, with hairline fit of contacting members.

G. Fasteners: Conceal fasteners wherever possible.

H. Weatherstripping: Provide compression weatherstripping against fixed stops.

For doors without fixed stops, provide sliding weatherstripping retained in an adjustable strip mortised into the edge of the door.

I. Aluminum Door and Sidelight Framing: Fabricate tubular and channel frame assemblies in configuration indicated with welded or mechanical joints in accordance with manufacturer's standards. Provide concealed fasteners. Reinforce internally with steel shapes as indicated, or as necessary, to support the required loads.

1. Provide finger guard or collapsible neoprene or PVC gasketing securely anchored into frame at hinge-jamb of pivoted doors.

2. Provide glazing systems for frames to receive lights and for replacement of glass. Provide for nonremoval of glass from the exterior.

3. Fabricate frame assemblies for exterior walls with flashing and weeps to drain penetrating moisture to the exterior. Provide anchorage and alignment brackets for concealed support of assembly from the building structure. Allow for thermal expansion.

2.8 FINISHES

A. Aluminum: Custom color, high performance organic coating, as specified in Section 084313.

3.0 EXECUTION

3.1 PREPARATION

A. Templates and Diagrams: Furnish templates, diagrams, and other data to fabricators and installers of related work, as necessary, for coordination of the automatic entrance door installation.

3.2 INSTALLATION

A. Comply with manufacturer's specifications and recommendations.

B. Set units plumb, level and true to line without warp or rack of frames or door. Anchor securely in place. Separate aluminum and other corrodible metal surfaces from sources of corrosion or electrolytic action at points of contact with other materials.

C. Set sill members in a bed of sealant or with joint fillers or gaskets as indicated to provide weathertight construction. Comply with requirements of Section 07900 for sealants, fillers and gaskets to be installed during installation of doors

and frames.

D. Set tracks, header assemblies, operating brackets, rails and guides level and true to location with adequate anchorage for permanent support.

3.3 ADJUSTING

A. After repeated operation of completed installation, equivalent to 3 days use by normal traffic (100 to 300 cycles), readjust door operators and controls for optimum operating condition and safety and for a weathertight closure. Lubricate hardware, operating equipment, and other moving parts.

3.4 CLEAN UP

A. Clean glass and aluminum surfaces promptly after installation. Remove excess glazing and sealant compounds, dirt and other substances. Exercise care to avoid damage to coatings.

1. Comply with requirements contained in Section 088000 for cleaning and maintenance of glass.

3.5 PROTECTION

A. Institute protective measures required throughout the remainder of the construction period to ensure that door will be without damage or deterioration at the time of acceptance.

END OF SECTION

SECTION 084313 – ALUMINUM-FRAMED STOREFRONTS

1.0 GENERAL

1.1 SUMMARY

A. This Section includes all labor, materials, equipment, operations, or methods listed, mentioned or scheduled on the plans and/or herein specified, including all incidentals necessary and required for completion of work under this Section.

1. Provision of exterior aluminum entrances.

2. Provision of exterior storefront type framing systems.

1.2 RELATED SECTIONS

A. Documents affecting work of this Section include, but are not necessarily limited to, General Conditions, Special Conditions and Division 1 of these Contract Documents.

B. Section 033000 - Cast-In-Place Concrete: Provision of concrete floor.

C. Section 079500 - Sealants and Caulking

D. Section 084213 - Aluminum-Framed Entrance

F. Section 087100 - Door Hardware

G. Section 088100 - Glass and Glazing

1.3 REFERENCES

A. AAMA - American Architectural Manufacturers Association

1. 1503.1 - Voluntary Test Method for Thermal Transmittance and Condensation Resistance of Windows, Doors and Glaze Wall Sections.

B. ASTM - American Society for Testing and Materials

1. A36 - Standard Specification for Structural Steel.

2. A123 - Standard Specification for Zinc (Hot-Dip Galvanized) Coatings on Iron and Steel Products.

3. A153 - Standard Specification for Zinc Coating (Hot-Dip)' on Iron and Steel Hardware.

4. A570 - Standard Specification for Steel, Sheet and Strip, Carbon, Hot-Rolled, Structural Quality.

5. A611 - Standard Specification for Steel, Sheet, Carbon, Cold- Rolled, Structural Quality.

6. B209 - Standard Specification for Aluminum and Aluminum-Alloy Sheet and Plate.

7. B211 - Standard Specification for Aluminum Alloy Bars, Rods and Wire.

8. E283 - Test Method for Rate of Air Leakage Through Exterior Windows, Curtain Walls, and Doors.

9. E330 - Test Method for Structural Performance of Exterior Windows, Curtain Walls, and Doors by Uniform Static Air Pressure Difference.

10. E331 - Test Method for Water Penetration of Exterior Windows, Curtain Walls, and Doors by Uniform Static Air Pressure Difference.

C. CBC - California Building Code, 2001 Edition

D. GANA - Glass Association of North America

E. NAAMM - National Association Architectural of Metal Manufacturers

F. SSPC - The Society for Protective Coatings

1. Paint 12 - Paint Specification No. 12: Cold Applied Asphalt Mastic (Extra Thick Film).

1.4 SYSTEM DESCRIPTION

A. Design Requirements: Provide aluminum storefront systems that comply with structural performance, air infiltration and water penetration requirements indicated.

1. Wind Loads: Provide aluminum storefront assemblies capable of withstanding negative and positive wind pressure in accordance with 2001 California Building Code with an Exposure C.

2. Structural Performance: Conduct tests for structural performance in

accordance with ASTM E330. At the conclusion of the tests there shall be no glass breakage or permanent damage to fasteners, anchors, hardware or actuating mechanism. Framing members shall have no permanent deformation in excess of 0.2 percent of their clear span.

3. Deflection Normal to the Plane of the Wall: Test pressure required to measure deflection of framing members normal to the plane of the wall shall be equivalent to the wind load specified above. Deflection shall not exceed 1/175 of the clear span, when subjected to uniform load deflection test.

4. Deflection Parallel to the Plane of the Wall: The system shall be designed to accommodate the building movement described on the Drawings. Deflection of any member carrying its full dead load shall not exceed an amount that will reduce glass bite below 75 percent of the design dimension and shall not reduce the edge clearance between the member and the fixed panel, glass or other 1 fixed member above to Jess than 1/8-inch. The clearance between the member and an operable door or window shall be at least 1/16-inch.

5. Air Infiltration: Provide aluminum storefront framing system with an air infiltration rate of not more than 0.06 cfm per square foot of fixed area when tested in accordance with ASTM E283 at an inward test pressure differential of 6.24 psf.

   a. Air Infiltration for Entrances:

      i) Not to exceed 0.50 cfm per foot of perimeter crack length for single doors.

      ii) Not to exceed 0.10 cfm per foot of perimeter crack length for pairs of doors.

6. Water Penetration: Provide exterior framing systems with no controlled water penetration as defined in the test method when tested in accordance with ASTM E331 at an inward pressure differential of 8.00 lbf per square foot.

B. Performance Requirements: Provide aluminum storefront assemblies that comply with performance characteristics specified, as demonstrated by testing the manufacturer's corresponding stock assemblies according to test methods indicated.

1. Thermal Movement: Design the aluminum storefront framing systems to provide for expansion and contraction of the component materials.

a. The system shall be capable of withstanding a metal surface temperature range of 180 degrees Fahrenheit without buckling, failure of joint seals, undue stress on structural elements, damaging loads on fasteners, reduction of performance, stress on glass, or other detrimental effects.

2. Condensation Resistance (CRF): Not be less than 59, when tested in accordance with AAMA1503.1.

a. Entrances: Not be less than 44 when tested in accordance with AAMA 1503.1.

3. Thermal Transmittance: Thermal transmittance (U-value) shall not be more than 0.63 BTU/hr/sf/degrees F., when tested in accordance with AAMA1503.1.

a. Entrances: Thermal transmittance (U-value) shall not be more than 0.63 BTU/hr/sf/degrees F., when tested in the closed and locked position in accordance with AAMA 1503.1.

1.5 SUBMITTALS

A. Product Data: Submit product data for each aluminum storefront system required, including:

1. Manufacturer's standard details and fabrication methods.

2. Data on finishing, hardware and accessories.

3. Recommendations for maintenance and cleaning of exterior surfaces.

B. Shop Drawings: Submit shop drawings for each aluminum storefront system required, including:

1. Layout and installation details, including relationship to adjacent work.

2. Elevations at 1/4-inch scale.

3. Detail sections of typical composite members.

4. Anchors and reinforcement.

5. Provisions for expansion and contraction.

6. Glazing details.

7. For entrance systems, include hardware schedule and indicate operating hardware types, quantities, and locations.

C. Samples

1. For Initial Color Selection; Submit pairs of samples of each specified color and finish on 12 inch long sections of extrusions or formed shapes. Where normal color variations are anticipated, include 2 or more units in each set of samples indicating extreme limits of color variations.

2. For Verification Purposes: The Architect reserves the right to require additional samples, that show fabrication techniques and workmanship, and design of hardware and accessories.

D. Quality Control Submittals

1. Test Reports: Provide certified test reports from a qualified independent testing laboratory showing that aluminum storefront systems have been tested in accordance with specified test procedures and comply with performance characteristics indicated.

1.6 WARRANTY

A. Warranty: Assume full responsibility for the satisfactory performance of the total storefront installation. Submit a written warranty, executed by the manufacturer, agreeing to repair or replace units that fail in materials or workmanship within the specified warranty period. Failures include, but are not necessarily limited to:

1. Structural failures including excessive deflection, excessive leakage or air infiltration.

2. Faulty operation.

3. Deterioration of metals, metal finishes and other materials beyond normal weathering.

B. Warranty Period: 2 years after the date of Substantial Completion.

1. Refer to Section 088100 for warranty for insulated glass.

C. Warranty Period for Metal Finishes: 20 years from date of Substantial Completion.

D. The warranty shall not deprive the Owner of other rights or remedies the Owner may have under other provisions of the Contract Documents, and is in addition to and runs concurrent with other warranties made by the Contractor under requirements of the Contract Documents.

2.0 PRODUCTS

2.1 MANUFACTURERS

A. Acceptable Manufacturers

1. Exterior Glazed Aluminum Entrances: Kawneer, “Series 350 Medium Stile Entrances”, or approved equal.

2. Exterior Storefront System: Kawneer, "EnCORE Series”, or approved equal.

2.2 MATERIALS

A. Aluminum: Alloy and temper recommended by manufacturer for type of use and finish indicated, complying with the requirements of standards indicated below.

1. Sheet and Plate: ASTM B209.

2. Extruded Bars, Rods, Shapes, and Tubes: ASTM B221.

B. Steel Reinforcement: Complying with ASTM A36 for structural shapes, plates, and bars; ASTM A611 for cold-rolled sheet and strip; or ASTM A570 for hot-rolled sheet and strip.

C. Glazing: As specified in Section 088100.

D. Glazing Gaskets: Manufacturer’s standard pressure-glazing system of black, resilient glazing gaskets, setting blocks, and shims or spacers, fabricated from an elastomer of type and in hardness recommended by system and gasket manufacturer to comply with system performance requirements. Provide gasket assemblies that have comers seated with sealant recommended by gasket manufacturer.

E. Sealants and Joint Fillers for Joints at Perimeter of Storefront Systems: As specified in Section 079000.

F. Bituminous Paint: Cold-applied asphalt-mastic paint complying with SSPC

Paint 12 requirements, except containing no asbestos, formulated for 30-mil thickness per coat.

2.3 COMPONENTS

A. Brackets and Reinforcements: Provide manufacturer's standard brackets and reinforcements that are compatible with adjacent materials. Provide nonstaining, nonferrous shims for aligning system components.

B. Fasteners and Accessories: Manufacturer's standard corrosion resistant, nonstaining, nonbleeding fasteners and accessories compatible with adjacent materials.

1. Reinforce members as required to retain fastener threads.

C. Concrete Inserts: Hot-dip galvanized cast-iron, malleable-iron, or steel inserts complying with ASTM A123 or ASTM A153 requirements.

D. Concealed Flashing: Manufacturer's standard corrosion resistant, nonstaining, nonbleeding flashing, compatible with adjacent materials, and of type recommended by manufacturer.

2.4 HARDWARE

A. General: Provide heavy-duty hardware units indicated in sizes, number, and type recommended by manufacturer for entrances indicated. Finish exposed parts to match door finish, unless otherwise indicated.

2.5 FABRICATION

A. General: Fabricate components that, when assembled, will have accurately fitted joints with ends coped or mitered to produce hairline joints free of burrs and distortion. After fabrication, clearly mark components to identify their locations in Project according to Shop Drawings.

1. Fabricate components for screw-spline frame construction.

B. Forming: Form shapes with sharp profiles, straight and free of defects or deformations, before finishing.

C. Prepare components to receive concealed fasteners and anchor and connection devices.

D. Fabricate components to drain water passing joints and condensation and moisture occurring or migrating within the system to the exterior.

E. Glazing Channels: Provide minimum clearances for thickness and type of glass indicated according to GANA's "Glazing Manual".

F. Storefront System: Fabricate framing in profiles as indicated. Frame extrusions shall have a minimum wall thickness of 0.80-inch. Provide subframes and reinforcing of types indicated or, if not indicated, as required for a complete system. Factory assemble components to greatest extent possible. Disassemble components only as necessary for shipment and installation.

1. 4-1/2 Inch Deep Exterior Storefront; Dual glazing system. 1-1/4 inch perimeter frame width, 1-3/4 inch mullions. Kawneer, "EnCORE Series", or approved equal.

G. Glazed Entrances

1. Provide entrances with door sections of 0.125-inch wall thickness.

2. Exterior glazing stops shall be integral part of door with 0.050-inch wall thickness. Interior stops shall be snap-in type. Both stops shall have EPDM gaskets.

3. Depth of Door 2 inches.

4. Stile Width: 3-1/2 inches.

5. Depth of Door Frame: As indicated.

6. Door stiles and rails shall have hairline joints at comers. Exterior comer construction shall be true mortise and tenon for physical interlock between rails and stiles. Inter comer construction shall be jointed by heavy concealed reinforcement brackets with screws and shall be of deep penetration and fillet welded.

7. Doors shall have adjusting mechanism in top rail to provide for minor clearance adjustments.

8. Weatherstripping: Provide wool pile installed in one stile of pairs of doors and in jamb stiles of center pivot doors.

2.6 FINISHES

A. General: Comply with NAAMM "Metal Finishes Manual" for recommendations relative to application and designations of finishes.

B. Appearance of Finished Work: Variations in appearance of abutting or adjacent pieces are acceptable if they are within one-half of the range of approved samples. Noticeable variations in the same piece are not acceptable. Variations in appearance of other components are acceptable if they are within the range of approved samples and are assembled or installed to minimize contrast.

C. Finish designations prefixed by “AA" conform to the system established by the Aluminum Association for designating aluminum finishes.

D. High-Performance Organic Coating: AA-M12-C42-R1x, as manufactured by Kawneer, “Kynar/Hylar Acroflur”, or equal.

1. Color and Gloss: As selected by the Architect. Custom color to match aluminum composite panels specified in Section 074213.

2.7 SCHEDULE OF DOOR HARDWARE FOR ENTRANCE

1 Set	Weather strip	Door manufacturer’s standard
2 Each	Bottom sweep	Door manufacturer’s standard
1 Each	Threshold	See Drawings
1 Set	Weather strip at jambs and head	Door manufacturer’s standard
1 Set	Weather strip meeting stiles at pairs	Door manufacturer’s standard

For other Hardware see section 087100.

3.0 EXECUTION

3.1 EXAMINATION

A. Examine areas with the installer present, for compliance with requirements for installation tolerances and other conditions affecting performance of storefront system. Do not proceed with installation until unsatisfactory conditions are corrected.

3.2 INSTALLATION

A. General: Comply with manufacturer’s written instructions for protecting, handling, and installing entrance and storefront systems. Do not install damaged components. Fit frame joints to produce hairline joints free of burrs and distortion. Rigidly secure nonmovement joints. Seal joints watertight.

B. Metal Protection: Where aluminum will contact dissimilar metals, protect against galvanic action by painting contact surfaces with primer or by applying sealant or tape recommended by manufacturer for this purpose. Where

aluminum will contact concrete, protect against corrosion by painting contact surfaces with bituminous paint.

C. Install components to drain water passing joints and condensation and moisture occurring or migrating within the system to the exterior.

D. Set continuous sill members and flashing in a full sealant bed to provide weathertight construction, unless otherwise indicated. Comply with requirements of Section 079000.

E. Install framing components plumb and true in alignment with established lines and grades without warp or rack of framing members.

F. Install entrances plumb and true in alignment with established lines and grades without warp or rack. Lubricate operating hardware and other moving parts according to hardware manufacturers' written instructions.

1. Install surface-mounted hardware according to manufacturer's written instructions using concealed fasteners to greatest extent possible.

G. Install glazing to comply with requirements of Section 088000.

H. Install perimeter sealant to comply with requirements of Section 079000.

I. Erection Tolerances: Install storefront system to comply with the following maximum tolerances.

1. Variation from Plane: Limit variation from plane or location shown to 1/8-inch in 12 feet; 1/4-inch over total length.

2. Diagonal Measurements: Limit difference between diagonal measurements to 1/8-inch.

3.3 CLEAN UP

A. Remove excess sealant and glazing compounds, and dirt from surfaces.

END OF SECTION

SECTION 084329 – SLIDING STOREFRONTS

1.0 GENERAL

1.1 SUMMARY

A. This Section includes all labor, materials, equipment, operations, or methods listed, mentioned or scheduled on the plans and/or herein specified, including all incidentals necessary and required for completion of work under this Section.

B. Provision of interior sliding storefront door as shown on project Drawings and as specified herein.

1.2 RELATED SECTIONS

A. Documents affecting work of this Section include, but are not necessarily limited to, General Conditions, Special Conditions and Division 1 of these Contract Documents.

B. Section 05500 - Metal Fabrications

C. Section 07900 - Sealants and Caulking

D. Section 087100 - Door Hardware: Provision of lock cylinder.

E. Section 088200 - Glazing: For glazing requirements for entrance door and sidelight.

1.3 REFERENCES

A. ANSI - American National Standards Institute

1. A156.4 - American National Standard For Door Controls - Closers..

2. ANSI/UL 325 Standard for Door Operators and Systems.

B. ASTM - American Society for Testing and Materials

1. A123 - Standard Specification for Zinc (Hot-dip) Galvanized, Coatings on Iron and Steel Products.

2. B209 - Standard Specification for Aluminum and Aluminum-alloy Sheet and Plate.

3. B211 - Standard Specification for Aluminum and Aluminum Alloy

Bars, Rods and Wire.

4. B221 - Standard Specification for Aluminum-alloy Extruded Bars, Rods, Wire, Shapes and Tubes.

5. E152 - Methods for Fire Tests of Door Assemblies.

6. E283 - Test Method for Rate of Air Leakage Through Exterior Windows, Curtain Walls, and Doors.

C. AWS - American Welding Society

D. NFPA - National Fire Protection Association

1. 80 - Fire Doors and Windows.

E. UL - Underwriters Laboratories, Inc.

1.4 DEFINITIONS

A. Automatic Entrance Door: Consist of the manufacturer's assembled automatic entrance door unit including entrance doors and frame, door operator controls, powered door operators and accessories.

1.5 SYSTEM DESCRIPTION

A. Performance Requirements

1. General: Provide aluminum sliding storefronts which have been manufactured, fabricated and installed to withstand the specified uniform loads and to maintain the manufacturer's performance criteria without defects, damage or failure.

2. Environmental Product Declarations (EPD): Shall have a Type III Product-Specific EPD created from a Product Category Rule.

1.6 SUBMITTALS

A. Product Data: Include construction details, material descriptions, dimensions of individual components and profiles, hardware, finishes, and installation instructions for each type of sliding storefronts indicated.

1. Recycled Content:

a. Indicate recycled content; indicate percentage of pre-consumer and post-consumer recycled content per unit of product.

b. Indicate relative dollar value of recycled content product to total dollar value of product included in project.

c. Indicate location recovery of recycled content.

d. Indicate location of manufacturing facility.

2. Environmental Product Declaration (EPD):

a. Include a Type III Product-Specific EPD created from a Product Category Rule.

B. Shop Drawings: Include plans, elevations, sections, details, hardware, and attachments to other work, operational clearances and installation details.

C. Samples for Initial Selection: For units with factory-applied color finishes including samples of hardware and accessories involving color selection.

D. Samples for Verification: For sliding storefronts and components required.

E. Product Test Reports: Based on evaluation of comprehensive tests performed by a qualified testing agency for each type, class, grade, and size of sliding storefronts. Test results based on use of downsized test units will not be accepted.

1.7 QUALITY ASSURANCE

A. Installer Qualifications: An installer which has had successful experience with installation of the same or similar units required for the project and other projects of similar size and scope.

B. Manufacturer Qualifications: A manufacturer capable of fabricating sliding storefronts that meet or exceed performance requirements indicated and of documenting this performance by inclusion of test reports, and calculations.

C. Source Limitations: Obtain sliding storefront through one source from a single manufacturer.

D. Product Options: Drawings indicate size, profiles, and dimensional requirements of sliding storefronts and are based on the specific system indicated. Refer to Division 01 Section “Product Requirements”. Do not modify size and dimensional requirements.

1. Do not modify intended aesthetic effects, as judged solely by Architect, except with Architect's approval. If modifications are proposed, submit comprehensive explanatory data to Architect for review.

E. Mockups: Build mockups to verify selections made under sample submittals and to demonstrate aesthetic effects and set quality standards for materials and execution.

1. Build mockup for type(s) of sliding storefront(s) indicated, in location(s) shown on Drawings.

F. Pre-installation Conference: Conduct conference at Project site to comply with requirements in Division 01 Section "Project Management and Coordination".

1.8 PROJECT CONDITIONS

A. Field Measurements: Check openings by accurate field measurement before fabrication. Show recorded measurements on shop drawings. Coordinate fabrication schedule with construction progress to avoid delay of the Work.

1. Where necessary, proceed with fabrication without field measurements, and coordinate fabrication tolerances to ensure proper fit.

1.9 WARRANTY

A. Warranty: Submit a written warranty, executed by the manufacturer, agreeing to repair or replace components of the sliding door system that fail in materials or workmanship within the specified warranty period. Failures include, but are not necessarily limited to:

1. Structural failures including excessive deflection, excessive leakage or air infiltration.

2. Faulty operation of operators and hardware.

3. Deterioration of metals, metal finishes, and other materials beyond normal weathering.

B. Warranty Period: 2 years after the date of Substantial Completion.

C. The warranty shall not deprive the Owner of other rights or remedies that the Owner may have under other provisions of the Contract Documents and is in addition to, and runs concurrent with, other warranties made by the Contractor under requirements of the Contract Documents.

2.0 PRODUCTS

2.1 MANUFACTURERS

A. Acceptable Kawneer Company Inc.; www.kawneer.com; or approved equal.

2.2 MATERIALS

A. Aluminum Extrusions: Alloy and temper recommended by sliding storefront manufacturer for strength, corrosion resistance, and application of required finish and not less than 0.070" (1.8 mm) wall thickness at any location for the main frame and sash members.

1. Recycled Content: Shall have a minimum of 50% mixed pre- and post-consumer recycled content.

a. Indicate recycled content; indicate percentage of pre-consumer and post-consumer recycled content per unit of product.

b. Indicate relative dollar value of recycled content product to total dollar value of product included in project.

c. Indicate location recovery of recycled content.

d. Indicate location of manufacturing facility.

B. Fasteners: Aluminum, nonmagnetic stainless steel or other materials to be non-corrosive and compatible with sliding storefront members, trim hardware, anchors, and other components.

C. Anchors, Clips, and Accessories: Aluminum, nonmagnetic stainless steel, or zinc-coated steel or iron complying with ASTM B 633 for SC 3 severe service conditions or other suitable zinc coating; provide sufficient strength to withstand design pressure indicated.

D. Reinforcing Members: Aluminum, nonmagnetic stainless steel, or nickel/chrome-plated steel complying with ASTM B 456 for Type SC 3 severe service conditions, or zinc-coated steel or iron complying with ASTM B 633 for SC 3 severe service conditions or other suitable zinc coating; provide sufficient strength to withstand design pressure indicated.

E. Sliding-Type Weather Stripping: Provide woven-pile weather stripping of wool, polypropylene, or nylon pile and resin-impregnated backing fabric. Comply with AAMA 701/702.

1. Weather Seals: Provide weather stripping with integral barrier fin or fins of semi-rigid, polypropylene sheet or polypropylene-coated material. Comply with AAMA 701/702.

F. Sealant: For sealants required within fabricated sliding storefront, provide sliding storefront manufacturer's standard, permanently elastic, non-shrinking, and non-migrating type recommended by sealant manufacturer for joint size and movement.

2.3 SLIDING STOREFRONTS

A. The 1010 Sliding Mall Front is not intended to be used as an exterior front. It can be used as an exterior front only when air, water penetration and deflection are not critical.

2.4 GLAZING

A. Glass and Glazing System: Refer to Division 08 Section “Glazing” for glass units and glazing requirements applicable to glazed sliding storefront units.

B. Glass: Comply with Division 08 Section “Glazing” for requirements applicable to safety glazing, insulating-glass units, and laminated glass units.

C. Glazing System: Glazing method shall be a channel type PVC gasket (marine glazed) which is compatible with aluminum and shall be resistant to deterioration by all forms of weathering and suitably retained to maintain a watertight seal between the glass and the surrounding frame.

2.5 HARDWARE

A. General: Provide manufacturer's standard hardware fabricated from aluminum, stainless steel, or other corrosion-resistant material compatible with aluminum; designed to smoothly operate, tightly close, and securely lock sliding storefronts.

B. Standard Hardware:

1. One pair of stainless steel tandem rollers per sliding panel

2. Stainless steel roller track

3. Adams Rite MS 1850A-505 Hookbolt Lock

4. Interior and Exterior Cylinders

5. Flush Face Pulls.

2.6 FABRICATION

A. General:

1. Fabricate Components per the Manufacturer's most current Installation Instruction manuals with minimum suggested clearances and shim spacing around the perimeter of the assembly while enabling installation and dynamic movement of the perimeter seal.

2. Accurately fit and secure all joints and corners. Make joints flush, hairline and waterproof.

3. Prepare frames to receive anchor devices as required.

4. When possible, arrange fasteners and attachments to conceal from view.

5. Shop assemble frames to the greatest extent possible and shop seal all horizontal to vertical joints.

2.7 FINISHES

A. Comply with AAMA-AFPA "Anodic Finishes/Painted Aluminum" for recommendations for applying and designating finishes.

B. Appearance of Finished Work: Variations in appearance of abutting or adjacent pieces are acceptable if they are within one-half of the range of approved Samples. Noticeable variations in the same piece are not acceptable. Variations in appearance of other components are acceptable if they are within the range of approved Samples and are assembled or installed to minimize contrast.

2.8 ALUMINUM FINISHES

A. Finish designations prefixed by AA comply with the system established by the Aluminum Association for designating aluminum finishes.

B. Factory Finishing:

1. Kawneer Permanodic™ AA-M10C21A31, AAMA 611, Architectural Class II Clear Anodic Coating, Color #17 Clear

3.0 EXECUTION

3.1 PREPARATION

A. Templates and Diagrams: Furnish templates, diagrams, and other data to fabricators and installers of related work, as necessary, for coordination of the automatic entrance door installation.

3.2 INSTALLATION

A. Comply with manufacturer's specifications and recommendations.

B. Set units plumb, level and true to line without warp or rack of frames or door. Anchor securely in place. Separate aluminum and other corrodible metal surfaces from sources of corrosion or electrolytic action at points of contact with other materials.

C. Set sill members in a bed of sealant or with joint fillers or gaskets as indicated to provide weathertight construction. Comply with requirements of Section 07900 for sealants, fillers and gaskets to be installed during installation of doors and frames.

D. Install complete door operator system in accordance with manufacturer's instructions.

E. Set tracks, header assemblies, operating brackets, rails and guides level and true to location with adequate anchorage for permanent support.

3.3 ADJUSTING

A. After repeated operation of completed installation, equivalent to 3 days use by normal traffic (100 to 300 cycles), re-adjust door operators and controls for optimum operating condition and safety and for a weather-tight closure. Lubricate hardware, operating equipment, and other moving parts.

3.4 CLEAN UP

A. Clean glass and aluminum surfaces promptly after installation. Remove excess glazing and sealant compounds, dirt and other substances. Exercise care to avoid damage to coatings.

1. Comply with requirements contained in Section 088000 for cleaning and maintenance of glass.

3.5 PROTECTION

A. Institute protective measures required throughout the remainder of the construction period to ensure that automatic entrance door will be without damage or deterioration at the time of acceptance.

END OF SECTION

SECTION 087100 – DOOR HARDWARE

1.0 GENERAL

1.1 SUMMARY

A. This Section includes all labor, materials, equipment, operations, or methods listed, mentioned or scheduled on the plans and/or herein specified, including all incidentals necessary and required for completion of work under this Section.

B. Items known commercially as finish or door hardware that are required for swing, sliding, and folding doors, except special types of unique hardware specified in the same sections as the doors and door frames on which they are installed as shown on project Drawings and as specified herein.

C. This Section includes the following, but is not necessarily limited to:

1. Door Hardware, including electric hardware.

2. Thresholds, gasketing and weatherstripping.

3. Door silencers or mutes.

1.2 RELATED SECTIONS

A. Documents affecting work of this Section include, but are not necessarily limited to, General Conditions, Special Conditions and Division 1 of these Contract Documents.

B. Section 081100 - Metal Doors and Frames: Provision of metal doors and frames.

C. Section 081416 - Flush Wood Doors: Provision of flush wood doors.

D. Section 084313 - Aluminum-Framed Storefronts: Provision of aluminum-framed storefronts.

1.3 REFERENCES

A. ADAAG - Americans with Disabilities Act (ACT) Accessibility Guidelines for Buildings and Facilities.

B. BHMA - Builders' Hardware Manufacturers Association.

C. CCR - California Code of Regulations, Tile 24, Part 2, California State Accessibility Standards.

D. DHI - Door and Hardware Institute.

E. NFPA - National Fire Protection Association.

1. NFPA 80 - Fire Doors and Windows

2. NFPA 101 - Life Safety Code

3. NFPA 105 - Smoke and Draft Control Door Assemblies

F. CBC 2001 - California Building Code.

G. UL - Underwriters Laboratories.

1. UL 10C - Fire Tests of Door Assemblies

2. UL 305 - Panic Hardware

H. WHI - Wamock Hersey Incorporated

I. SDI - Steel Door Institute

1.4 SUBMITTALS AND SUBSTITUTIONS

A. General: Submit in accordance with Conditions of the Contract and Division 1 Specification sections.

B. Submit product data (catalog cuts) including manufacturers' technical product information for each item of door hardware, installation instructions, maintenance of operating parts and finish, and other information necessary to show compliance

with requirements.

C. Submit 6 copies of schedule organized vertically into “Hardware Sets” with index of doors and headings, indicating complete designations of every item required for each door or opening. Include following information:

1. Type, style, function, size and finish of each hardware item.

2. Name, part number and manufacturer of each item.

3. Fastenings and other pertinent information.

4. Location of hardware set coordinated with floor plans and door schedule.

5. Explanation of all abbreviations, symbols and codes contained in schedule.

6. Mounting locations for hardware.

7. Door and frame sizes and materials.

8. List of manufacturers used and their nearest representative with address and phone number.

9. Keying information.

D. Make substitution requests in accordance with Division

1. Substitution requests must be made prior to bid date, include product data and indicate benefit to the project. Furnish samples of any proposed substitution.

E. Wiring Diagrams: Provide product data and wiring and riser diagrams for all electrical products listed in the Hardware Schedule portion of this section.

F. Keying Schedule: Submit separate detailed schedule indicating clearly how the Owner’s final instructions on keying of locks has been fulfilled.

G. Templates for doors, frames, and other work specified to be factory prepared for

the installation of door hardware. Check shop drawings of other work to confirm that adequate provisions are made for locating and installing door hardware to comply with indicated requirements.

H. Furnish as-built/as-installed schedule with close-out documents, including keying schedule, wiring/riser diagrams, manufacturers' installation, adjustment and maintenance information.

1.5 QUALITY ASSURANCE

A. Obtain each type of hardware (latch and lock sets, hinges, closers, exit devices etc.) from a single manufacturer.

B. Supplier Qualifications: A recognized architectural door and finish hardware supplier shall be a direct factory contract supplier, with warehousing facilities in the project's vicinity that has a record of successful in-service performance for a period of not less than 5 years. The firm shall have in their employ a certified Architectural Hardware Consultant (AHC) who is available at all reasonable times during the course of the work and for project hardware consultation at no additional cost to the Owner, Architect, and Contractor.

1. The supplier shall be an authorized factory distributor of the keying system specified.

2. The supplier is required to meet with Owner to finalize keying requirements and to obtain final instructions in writing.

3. All devices shall comply with the CCR, Title 24 and the California Building Code, DSA/AC provisions and requirements of Chapters 10 & 11B; NFPA; ADA.

4. The supplier shall stock parts for products supplied and be capable of repairing and replacing hardware items found defective within warranty periods.

C. Hardware Installer: Company specializing in the installation of commercial door hardware with five years documented experience.

D. Fire-Rated Openings: Provide door hardware for fire-rated openings that complies

with NFPA Standard No. 80 and requirements of authorities having jurisdiction. Provide only items of door hardware that are listed and tested by UL or Wamock Hersey for given type/size opening and degree of label. Provide proper latching hardware, door closers, approved-bearing hinges and seals whether listed in the Hardware Schedule or not.

1. Where emergency exit devices are required on fire-rated doors, (with supplementary marking on doors' UL labels indicating “Fire Door to be Equipped with Fire Exit Hardware") provide UL label on exit devices indicating “Fire Exit Hardware".

E. Exit Doors: Operable from inside with single motion without the use of a key or special knowledge or effort.

1.6 DELIVERY, STORAGE AND HANDLING

A. Coordinate delivery of packaged hardware items to the appropriate locations (shop or field) for installation.

B. Hardware items shall be individually packaged in manufacturers’ original containers, complete with proper fasteners. Clearly mark packages on outside to indicate contents and locations in hardware schedule and in work.

C. Provide locked storage area for hardware, protect from moisture, sunlight, paint, chemicals, etc.

D. Inventory door hardware jointly with representatives of hardware supplier and hardware installer until each is satisfied that count is correct.

1.7 MAINTENANCE

A. Maintenance Toots and Instructions: Furnish a complete set of specialized tools and maintenance instructions as needed for Owner’s continued adjustment, maintenance, and removal and replacement of door hardware.

1.8 PRE-INSTALLATION CONFERENCE

A. Convene a pre-installation conference at least one week prior to beginning work of this section,

B. Attendance: Architect, Construction Manager, Contractor, hardware supplier, installer, key Owner personnel, and Project Inspector.

C. Agenda: Review hardware schedule, products, installation procedures and coordination required with related work. Review Owner's keying standards.

1.9 WARRANTY

A. Provide warranties of respective manufacturers' regular terms of sale from day of final acceptance as follows:

1. Closers: 10 years, except electronic closers shall be 2 years.

2. Exit devices: 3 years.

3. All other hardware: 2 years.

2.0 PRODUCTS

2.1 MANUFACTURERS

Item	**Manufacturer**	**Acceptable Substitutes**
Hinges	Ives	Hager, Stanley, McKinney
Locks, Latches & Cylinders	Schlage	None
Exit Devices	Von Duprin	None
Closers	LCN	None
Push, Pull & Protection Plates	Ives	Trimco, BBW, Quality
Flush Bolts	Ives	Trimco, BBW, Quality
Rust Proof Strikes	Ives	Trimco, BBW, Quality
Coordinators	Ives	Trimco, BBW, Quality
Stops	Ives	Trimco, BBW, Quality

Overhead Stops	Glynn-Johnson	None

2.2 MATERIALS

A. Hinges: Exterior out-swinging door butts shall be non-ferrous material and shall have stainless steel hinge pins. All doors to have non-rising pins.

1. Hinges shall be sized in accordance with the following:

a. Height:

i) Doors up to 41 inches wide: 4-1/2 inches.

ii) Doors 42 inches to 48 inches wide: 5 inches.

b. Width: Sufficient to clear frame and trim when door swings 180 degrees.

c. Number of Hinges: Furnish 3 hinges per leaf to 7 feet-5 inches in height. Add one for each additional 2 feet in height.

2. Furnish non-removable pins (NRP) at all exterior out-swing doors and interior key lock doors with reverse bevels.

B. Continuous Hinges: As manufactured by Select Products Limited. UL rated as required.

C. Extra Heavy duty Commercial Mortise Locks: Schlage UL” Series as scheduled with “06” Style Lever and “A" Style Rose.

1. Lock chassis shall be constructed of cold rolled steel.

2. Latchbolt shall be 3/4-inch throw stainless steel with a stainless steel antifriction tongue.

3. The deadbolt, when used, shall be 1 inch throw stainless steel.

4. All trim shall be through-bolted with the spring cages supporting the trim attached to the lock cases to prevent torquing.

5. Cast lever trim and wrought rose trim.

6. No set screws in outside lever are permitted, use threaded bushings only.

7. Hand of lock chassis to be changeable by simply moving one screw from one side to the case to the other and pulling and reversing the latchbolt.

D. Deadlocks: Rotating cylinder trim rings of attack-resistant design. Mounting plates and actuator shields of plated cold-rolled steel. Mounting screws of 1/4-inch diameter steel and protected by drill-resistant ball bearings. Steel alloy deadbolt with hardened steel roller. Strike alloy deadbolt with reinforcer and two 3 inch long screws. ANSI At56.5, 1992 Grade 1 certified.

E. Exit devices: Von Duprin as scheduled.

1. Provide certificate by independent testing laboratory that device has completed over 1,000,000 cycles and can still meet ANSI/BHMA A156.3 - 1994 standards.

2. All internal parts shall be of cold-rolled steel with zinc dichromate coating.

3. Mechanism case shall have an average thickness of .140 inch.

4. Compression spring engineering.

5. Non-handed basic device design with center case interchangeable with all functions.

6. All devices shall have quiet return fluid dampeners.

7. All latchbolts shall be deadlocking with 3/4-inch throw and have a self-lubricating coating to reduce friction and wear.

8. Device push bar must release when a force of 32 pounds, or less, of pressure is applied when a force of 250 pounds is applied to the door.

9. Device shall bear UL label for fire and or panic as may be required.

10. All surface strikes shall be roller type and utilize a plate underneath to prevent movement.

11. Lever Trim: “Breakaway” design, forged brass or bronze escutcheon with a minimum of .130 inch thickness, match lockset lever design.

12. Panic Hardware shall comply with CBC and shall be mounted between 30 inches and 44 inches above the finished floor surface. The unlatching force shall not exceed 15 lbs. applied in the direction of travel. Panic hardware shall comply with CBC Section 1003.3.1.9.

F. Closers: LCN as scheduled. Place closers inside building, stairs, room, etc.

1. Door closer cylinders shall be of high strength cast iron construction with double heat treated pinion shaft to provide low wear operating capabilities of internal parts throughout the life of the installation. Ail door closers shall be tested to ANSI/BHMA A156.4 test requirements by a BHMA certified testing laboratory. A written certification showing successful completion of a minimum of 10,000,000 cycles must be provided.

2. All door closers shall be fully hydraulic and have full rack and pinion action with a shaft diameter of a minimum of 11/16 inch and piston diameter of 1 inch to ensure longevity and durability under all closer applications.

3. All parallel arm closers shall incorporate one piece solid forged steel arms with bronze bushings. 1-9/16 inches steel stud shoulder bolts, shall be incorporated in regular arms, hold-open arms, arms with hold open and stop built in. All other closers to have forged steel main arms for strength, durability, and aesthetics for versatility of trim accommodation, high strength and long life.

4. All parallel arm closers so detailed shall provide advanced backcheck for doors subject to severe abuse or extreme wind conditions. This advanced backcheck shall be located to begin cushioning the opening swing of the door at approximately 45 degrees. The intensity of the backcheck shall be

fully adjustable by tamper resistant non-critical screw valve.

5. Closers shall be installed to permit doors to swing 180 degrees.

6. All closers shall utilize a stable fluid withstanding temperature range of 120 degrees F. to -30 degrees F. without requiring seasonal adjustment of closer speed to properly close the door.

7. Drop brackets are required at narrow head rails.

8. Maximum effort to operated doors shall not exceed 5 lbs., such pull or push effort being applied at right angles to hinged doors. Compensating devices or automatic door operators may be utilized to meet the above standards. When fire doors are required, the maximum effort to operate the door may be increased but shall not to exceed 15 lbs. when specifically approved by fire marshal. All closers shall be adjusted to operate with the minimum amount of opening force and still close and latch the door. Door shall take at least 3 seconds to move from an open position of 70 degrees to a point of 3 inches from the latch jamb. Reference CBC Sections 1133B.2.1,1133B.2.5, 1133B2.5.1 & 1003.3.1.8.

9. Provide sex-bolted or through bolt mounting for all door closers.

G. Flush Bolts & Dust Proof Strikes: Automatic Flush Bolts shall be of the low operating force design. Utilize the top bolt only model for interior doors where applicable and as permitted by testing procedures.

1. Manual flush bolts only permitted on storage or mechanical openings as scheduled.

2. Provide dust proof strikes at openings using bottom bolts.

H. Door Stops:

1. Unless otherwise noted in Hardware Sets, provide wall type with appropriate fasteners. Where wall type cannot be used, provide floor type. If neither can be used, provide overhead type.

2. Do not install floor stops more than four (4) inches from the face of the

wall or partition (Title 24,1133B.8.6).

3. Overhead stops shall be made of stainless steel and non-plastic mechanisms and finished metal end caps. Field-changeable hold-open, friction and stop- only functions.

I. Protection Plates: Fabricate either kick, armor, or mop plates with four beveled edges. Provide kick plates 10 inches high and 2 inches LDW. Sizes of armor and mop plates shall be listed in the Hardware Schedule. Furnish with machine or wood screws of bronze or stainless to match other hardware.

J. Thresholds: As Scheduled and per details.

1. Thresholds shall not exceed 1/2-inch in height, with a beveled surface of 1:2 maximum slope.

2. Set thresholds in a full bed of butyl-rubber or polyisobutylene mastic sealant complying with requirements in Division 7 “Thermal and Moisture Protection’.

3. Use 1/4-inch fasteners, red-head flat-head sleeve anchors (SS/FHSL). 4. Thresholds shall comply with CBC Section 1133B.2.4.1.

K. Seals: Provide silicone gasket at all rated and exterior doors.

L. Door Shoes & Door Top Caps: Provide door shoes at all exterior wood doors and metal doors and top caps at all exterior out-swing doors.

M. Silencers: Furnish silencers for interior hollow metal frames, 3 for single doors, 2 for pairs of doors. Omit where sound or light seals occurs, or for fire-resistive-rated door assemblies.

N. Schlage ND Heavy Duty Commercial Latchsets as noted for specific door conditions

1. Schlage ND95

O. Automatic Sliding Doors: Provide complete standard CS AutoCav sliding door system:

1. Manufacturer: Cavity Sliders

2. Pulley: Self-tensioning with heavy-duty belt

3. Track & Carriage: Heavy duty one-piece extruded aluminum with large diameter wheels

4. Access Panels: Provide at track section

5. Controller: Standard

6. Motor & Gear Box: Locks door in place

7. Safety Beam Sensors: Standard

8. Floor Track: Hidden T-guide

9. Access Control: Secure entry via swipe key

2.3 KEYING

A. Furnish a Grand Master, Master, keyed alike or keyed different system as directed by the Owner or Architect

B. Provide construction keying for any new doors requiring locking during construction; remove temporary cores or inserts immediately prior to Owner occupancy. Furnish permanent keys (and cores if applicable) directly to Owner.

C. Key Blanks: Standard “6” pin bow key blank; tag to identify.

D. Supply keys and blanks as follows:

1. Supply 2 cut change keys for each different change key code.

2. Supply 1 uncut key blank for each change key code.

3. Supply 6 cut master keys for each different master key set.

4. Supply 3 uncut key blanks for each master key set.

2.4 FINISHES

A. Generally, to be satin chrome US26D (626 on bronze and 652 on steel) unless otherwise noted.

B. Furnish kick or armor plates in satin stainless steel US32D (630) unless otherwise noted.

C. Door closers shall be powder-coated to match other hardware, unless otherwise noted.

D. Aluminum items to be finished anodized aluminum.

2.5 FASTENERS

A. Screws for strikes, face plates and similar items shall be flat head, countersunk type, provide machine screws for metal and standard wood screws for wood.

B. Screws for butt hinges shall be flathead, countersunk, full-thread type.

C. Fastening of closer bases or closer shoes to doors shall be by means of sex bolts and spray painted to match closer finish.

D. Provide expansion anchors for attaching hardware items to concrete or masonry.

E. Alt exposed fasteners shall have a phillips head.

F. Finish of exposed screws to match surface finish of hardware or other adjacent work.

G. All Exit Devices and Lock Protectors shall be fastened to the door by the means of sex bolts or through bolts.

2.6 SCHEDULE

A. The items listed in the following schedule shall conform to the requirements of the foregoing specifications.

B. The Door Schedule on the Drawings indicates which hardware set is used with each door.

Manufacturers Abbreviations (Mfr.)		
GLY =	Glynn-Johnson Corporation	Overhead Door Stops
HAG =	Hager	Sliding Door Track & Hardware
IVE =	Ives	Hinges, Pivots, Bolts, Coordinators, Dustproof Strike, Push Pull & Kick Plates, Door, Stops & Silencers
LCN =	LCN	Door Closers
NGP =	National Guard Products	Thresholds, Gasketing & Weatherstripping
SCH =	Schlage	Lock Company Locks, Latches & Cylinders
SEL =	Select Products	Continuous Hinges
TRI =	Trimco	Signs
VON =	Von Duprin	Exit Devices, Power Transfers & Power Supplies

HW SET: 01				
3 EA	HINGES	5BB1 4.5 x 4.5 NRP	630	IVE
1 EA	ELECTRIC HINGE	5BB1 4.5 X 4.5 TW8	630	IVE
1 EA	ELEC PANIC HARDWARE	SS-AX-98-EO-EMERG EXIT RSS-24VDC	630	VON
1 EA	MORTISE CYLINDER	20-001	630	SCH
1 EA	SURFACE CLOSER	4111 EDA	689	LCN
1 EA	GASKETING	188SBK PSA	BK	ZER
1 EA	DOOR SWEEP	39A	A	ZER

1	THRESHOLD	PER DETAIL	THRESHOLD	PER DETAIL
1 EA	SIGN	*ALARM WILL SOUND*	-	VON
1 EA	HORN	1910-1 12/24 VDC	WHT	SCE
1 EA	POWER SUPPLY	PS902 120/240 VAC	LGR	SCE

HW SET: 02				
1 SET	STANDARD HARDWARE BY DOOR MANUFACTURER			
2 EA	MORTISE CYLINDER	20-013 118	626	SCH

HW SET: 03				
4 EA	HINGES	5BB1 4.5 x 4.5	630	IVE
1 EA	CLASSROOM LOCK	L9070P 06A	630	SCH
1 EA	OH STOP	90S	630	GLY
1 EA	SURFACE CLOSER	4011	689	LCN
1 SET	SEALS	BY DOOR FRAME MANUFACTURER	-	-
1 EA	DOOR SWEEP	153A	A	ZER
1	THRESHOLD	PER DETAIL	AL	NGP

HW SET: 04				
8 EA	HINGES	5BB1 4.5 x 4.5	652	IVE
1 EA	MANUAL FLUSH BOLT	FB458 12"	626	IVE

1 EA	DUST PROOF STRIKE	DP1	626	IVE
1 EA	HALF DUMMY TRIM	L0170 06A	630	SCH
1 EA	SGL CYL DEADBOLT	B60	626	SCH
2 EA	OH STOP	90S	630	GLY

3.0 EXECUTION

3.1 INSPECTION

A. Verify that doors and frames are square and plumb and ready to receive work and dimensions are as instructed by the manufacturer.

B. Beginning of installation means acceptance of existing conditions.

3.2 INSTALLATION

A. Install hardware in accordance with manufacturer's instructions and requirements of DHL

B. Use the templates provided by hardware item manufacturer.

C. Mounting heights for hardware shall be as recommended by the Door and Hardware Institute. Operating hardware will to be located between 30 inches and 44 inches above finished floor.

D. Set units level, plumb and true to line and location. Adjust and reinforce the attachment substrate as necessary for proper installation and operation.

E. Drill and countersink units that are not factory-prepared for anchorage fasteners. Space fasteners and anchors in accordance with industry standards.

F. Set thresholds for exterior doors in full bed of butyl-rubber sealant.

G. If hand of door is changed during construction, make necessary changes in hardware at no additional cost.

3.3 HARDWARE LOCATIONS

A. Conform to CCR, Title 24, Part 2, and ADAAG for positioning requirements for the disabled.

3.4 FIELD QUALITY CONTROL

A. Architectural Hardware Consultant (AHC) to inspect installation and certify that hardware and its installation have been furnished and installed in accordance with manufacturer's instructions and as specified herein.

3.5 ADJUST AND CLEAN UP

A. Adjust and check each operating item of hardware and each door, to ensure proper operation or function of every unit. Replace units which cannot be adjusted to operate freely and smoothly as intended for the application made.

B. Clean adjacent surface soiled by hardware installation.

C. Final Adjustment: Wherever hardware installation is made more than one month prior to acceptance or occupancy of a space or area, return to the work during the week prior to acceptance or occupancy, and make final check and adjustment of all hardware items in such space or area. Clean operating items as necessary to restore proper function and finish of hardware and doors. Adjust door control devices to compensate for final operation of heating and ventilating equipment.

D. Instruct Owner’s Personnel in proper adjustment and maintenance of hardware finishes, during the final adjustment of hardware.

E. Continued Maintenance Service: Approximately six months after the completion of the project, the Contractor accompanied by the Architectural Hardware Consultant, shall return to the project and re-adjust every item of hardware to restore proper functions of doors and hardware. Consult with and instruct

Owner's personnel in recommended additions to the maintenance procedures. Replace hardware items which have deteriorated or failed due to faulty design, materials or installation of hardware units. Prepare a written report of current and predictable problems (of substantial nature) in the performance of the hardware.

END OF SECTION

SECTION 088100 – GLASS AND GLAZING

1.0 GENERAL

1.1 SUMMARY

A. This Section includes all labor, materials, equipment, operations, or methods listed, mentioned or scheduled on the plans and/or herein specified, including all incidentals necessary and required for completion of work under this Section.

B. Provide and install glass and glazing units and required accessories as shown on project Drawings and as specified herein, including:

1. Windows

   a. Standard

2. Door lites

   a. Exterior and Interior Doors

1.2 RELATED SECTIONS

A. Documents affecting work of this Section include, but are not necessarily limited to, General Conditions, Special Conditions and Division 1 of these Contract Documents.

B. Section 079000 - Sealants and Caulking: Provision of sealants.

C. Section 081100 - Metal Doors and Frames: Provision of steel doors.

D. Section 081416 - Flush Wood Doors: Provision of wood doors.

E. Section 084313 - Aluminum-Framed Storefronts: Provision of aluminum- framed storefront and glazed entrance.

F. Section 084329 - Sliding Storefront

1.3 REFERENCES

A. American Architectural Manufacturers Association:

1. AAMA 800 - Voluntary Specifications and Test Methods for Sealants

B. ASTM International (ASTM):

1. ASTM C509 - Specification for Elastomeric Cellular Preformed Gasket and Sealing Material

2. ASTM C864 - Specification for Dense Elastomeric Compression Seal Gaskets, Setting Blocks, and Spacers

3. ASTM C920 - Specification for Elastomeric Joint Sealants.

4. ASTM C1036 - Specification for Flat Glass

5. ASTM C1048 - Specification for Heat-Treated Flat Glass - Kind HS, Kind FT Coated and Uncoated Glass

6. ASTM C1087 - Test Method for Determining Compatibility of Liquid-Applied Sealants with Accessories Used in Structural Glazing Systems

7. ASTM C1115 - Specification for Dense Elastomeric Silicone Rubber Gaskets and Accessories

8. ASTM C1172 - Specification for Laminated Architectural Flat Glass

9. ASTM C1281 - Specification for Preformed Tape Sealants for Glazing Applications

10. ASTM C1330 - Specification for Cylindrical Sealant Backing for Use with Cold Liquid Applied Sealants

11. ASTM C1376 - Specification for Pyrolytic and Vacuum Deposition Coatings on Glass

12. ASTM E774 - Specification for the Classification of the Durability of Sealed Insulating Glass Units

13. ASTM E1300 - Practice for Determining Load Resistance of Glass in Buildings

14. ASTM E2190 - Standard Specification for Insulating Glass Unit Performance and Evaluation

C. Code of Federal Regulations:

1. 16 CFR 1201 - Safety Standard for Architectural Glazing Materials

D. Glass Association of North America (GANA):

1. Glazing Manual

2. Laminated Glass Design Guide

3. Engineering Standards Manual

E. The Insulating Glass Manufacturers Alliance (IGMA):

1. IGMA TB-3001 - Sloped Glazing Guidelines

2. SIGMA TM-3000 - Glazing Guidelines for Sealed Insulating Glass Units

F. Lawrence Berkeley National Laboratory; Environmental Energy Technologies Division; Building Technologies Department; Windows & Daylighting Group, windows.lbl.gov/software:

1. LBL-44789 WINDOW 5.0 - A PC Program for Analyzing Window Thermal Performance

G. National Fenestration Rating Council (NFRC):

1. NFRC 100 - Procedure for Determining Fenestration Product Thermal Properties

2. NFRC 200 - Procedure for Determining Fenestration Product Solar Heat Gain Coefficients at Normal Incidence

3. NFRC 300 - Procedures for Determining Solar Optical Properties of Simple Fenestration Products

1.4 DEFINITIONS

A. Manufacturers of Primary Glass: Firms that produce primary glass, as defined in referenced industry publications.

B. Manufacturers/Fabricators of Glass Products: Firms that utilize primary glass in the production of glass products that may include coated glass, laminated glass, and insulating glass.

C. Sealed Insulating Glass Unit Surfaces:

1. Surface 1: Exterior surface of outer lite

2. Surface 2: Interspace-facing surface of outer lite

3. Surface 3: Interspace-facing surface of inner lite

4. Surface 4: Interior surface of inner lite

1.5 PERFORMANCE REQUIREMENTS

A. General: Provide glazing systems that will withstand indicated loads and normal thermal movement without failure, including loss or glass breakage resulting from defective manufacture, fabrication, or installation; failure of glazing systems to remain watertight and airtight; or deterioration of glazing materials.

B. Glass Design: Glass thicknesses indicated are minimums. Select actual glass lite thicknesses by analyzing loads and conditions. Provide glass lites in the thicknesses and in strengths required to meet or exceed the following criteria:

1. Glass Thicknesses: Comply with ASTM E1300, as follows:

a. Specified Design Wind Loads: As indicated

b. Probability of Breakage for Vertical Glazing: 8 lites per 1000 for lites set within 15 degrees of vertical and under wind load for a load duration of three (3) seconds.

c. Probability of Breakage for Sloped Glazing: 1 lite per 1000 for lites set more than 15 degrees off vertical and under wind and snow loads for a duration of thirty (30) days.

d. Thickness of Tinted Glass: Provide the same thickness for each tint

color for all applications.

C. Thermal Movements: Allow for thermal movements of glazing components and glass framing members resulting from a temperature change range of 120 deg F ambient and 180 deg F material surfaces.

D. Thermal and Optical Performance Properties: Provide glass meeting specified performance properties, based on manufacturer's published test data for units of thickness indicated, and the following:

1. Center-of-Glass Values: Per LBL-44789 WINDOW 5.0 analysis, as follows:

a. U-Factors: NFRC 100 expressed as Btu/sq. ft. x h x deg F.

b. Solar Heat Gain Coefficient: NFRC 200.

c. Solar Optical Properties: NFRC 300.

1.7 SUBMITTALS

A. Comply with provisions of Section 013300, Submittal Procedures.

B. Product Data: Provide manufacturer’s data sheets for each glass product and glazing material.

C. Samples: Provide 12-inch-square for each type of glass product other than monolithic clear float glass or clear float glass only set in insulated glass units.

D. Provide Shop Drawings.

E. Glazing Schedule: Prepare schedule using designations used on Drawings.

F. Product Certificates: Signed by manufacturers/fabricators of glass products certifying that products furnished comply with project requirements.

G. Preconstruction Adhesion and Compatibility Test Report: From glazing sealant manufacturer, based on submitted samples or acceptable data from previous testing of current formulations with similar products.

H. Qualification Information: For Installer firm and Installer’s manufacturer/fabricator-trained field supervisor.

I. Warranties: Submit sample meeting warranties requirements of this Section.

1.8 QUALITY ASSURANCE

A. Manufacturer/Source: Obtain each type of glass product from a single primary glass manufacturer and a single manufacturer/fabricator for each glass product type.

1. For glass sputter-coated with solar-control low-e coatings, obtain glass products in fabricated units from a manufacturer/fabricator certified by the primary glass manufacturer.

B. Installer Qualifications: Experienced Installer with minimum of 5 successful completed projects of similar materials and scope, approved by glass product manufacturer/fabricator.

C. Preconstruction Adhesion and Compatibility Testing: Submit glass units, glazing materials, and glass-framing members with applicable finish to elastomeric glazing sealant manufacturer for determination of sealant compatibility, priming, and preparation requirements for optimum adhesion and performance.

D. Safety Glazing Products: Comply with size, glazing type, location, and testing requirements of 16 CFR 1201 for Category I and II glazing products, and requirements of authorities having jurisdiction.

E. Glazing Industry Publications: Comply with glass product manufacturer’s recommendations and the following:

1. GANA Publications: GANA Laminated Division's "Laminated Glass Design Guide" and GANA's "Glazing Manual."

2. IGMA Publication for Insulating Glass: SIGMA TM-3000, "Glazing Guidelines for Sealed Insulating Glass Units."

F. Insulating-Glass Certification Program: Indicate compliance with requirements of Insulating Glass Certification Council on applicable glazing products.

G. Preinstallation Conference: Conduct conference at Project site in compliance with Sections 013113, Project Coordination and 013119, Project Meetings.

1.9 DELIVERY, STORAGE, AND HANDLING

A. Protect glazing materials during shipping, handling, and storage to prevent breakage, scratching, damage to seals, or other visible damage. Deliver, unload, store, and erect

glazing materials without exposing panels to damage from construction operations.

1. Comply with manufacturer's venting and sealing recommendations for shipping and handling of insulating glass units exposed to substantial altitude change.

1.10 WARRANTY

A. Warranty for Coated-Glass Products: Manufacturer's standard form, signed by coated-glass product primary manufacturer or manufacturer/fabricator, as applicable, agreeing to replace coated-glass units that display peeling, cracking, and other deterioration in metallic coating under normal use, within ten (10) years of date of Substantial Completion.

B. Warranty for Insulating Glass: Manufacturer's standard form, signed by insulating-glass product manufacturer/fabricator, agreeing to replace insulating- glass units that exhibit failure of hermetic seal under normal use evidenced by the obstruction of vision by dust, moisture, or film on interior surfaces of glass, within ten (10) years of date of Substantial Completion.

C. Installer's Warranty: Form acceptable to County, signed by glass product Installer, agreeing to replace glass products that deteriorate, or that exhibit damage or deterioration of glass or glazing products due to faulty installation, within two (2) years of date of Substantial Completion.

2.0 PRODUCTS

2.1 MANUFACTURER

A. PPG Industries, Inc, Pittsburgh, PA, 1-888-774-4332, www.corporateportal.ppg.com.

2.2 MATERIALS

A. General:

1. Annealed Float Glass, General: ASTM C1036, Type I, Quality-Q3, class indicated.

2. Heat-Treated Float Glass, Heat-Strengthened: ASTM C1048; Type I (transparent flat glass); Quality-Q3; Kind HS, of class and condition indicated: where indicated, where needed to resist thermal stresses and where

required to comply with performance requirements.

3. Pyrolytic-Coated Float Glass: ASTM C1376, float glass with metallic-oxide coating applied by pyrolytic deposition process during primary glass product manufacture.

4. Sputter-Coated Float Glass: ASTM C1376, float glass with metallic-oxide or -nitride coating deposited by vacuum deposition process following primary glass product manufacture.

5. Insulating-Glass Units: Factory-assembled units consisting of dual-sealed lites of glass separated by a dehydrated interspace, with manufacturer's standard spacer material and construction, per ASTM E774 and E2190.

B. Insulated Glass Units: Solarban 60 Solar Control Low-E (clear):

1. Units shall be Kind HS (heat strengthened) where required and Kind FT (fully tempered) where indicated.

a. Solarban Outdoor Lite Clear Glass 2 float glass shall be minimum 6mm thick.

b. Solarban 60 Class 1 clear float glass shall be minimum 6mm thick.

i. Coating: Solar Control Low-E coating sputtered on third surface.

2. Performance Characteristics:

a. Unit Overall Thickness: 25mm.

b. Interspace Content: Air.

c. Transmittance:

i. Ultra Voilet: 19 %

ii. Visible: 70 %

iii. Total Solar Energy: 33 %

d. Reflectance:

i. Visible Light: 11 %

ii. Total Solar Energy: 30 %

e. U-Value (Imperial):

i. Winter Nighttime: 0.29

ii. Summer Daytime: 0.27

f. Coefficients:

i. Shading Coefficient: 0.44

ii. Solar Heat Gain Coefficient: 0.38

g. Light to Solar Gain (LSG): 1.85

C. DOOR GLAZING

1. Cut-outs for vision lites shall be 8-inches from the top of the door and from strike-side edge of door to allow mounting space for door hardware such as door closers, panic devices and lever handles.

2. Use manufacturers' vision lite kits and louvers.

3. Acceptable manufacturer: Anemostat "Lo-Pro" or equal.

4. Non-rated doors with vision lites, use 7/32" laminated safety glass. Provide etched label on the glass.

5. For fire-rated doors with vision panels, use fire and safety rated glass products complying with the fire resistance and impact requirements of CBC section 715 and Chapter 24. Provide etched label on the glass. Wired glass is not allowed.

6. Acceptable Manufacturer as listed below; or approved equal

a. Firelite Glass, Distributed by Technical Glass Products, Kirkland Washington, www.fireglass.com, 800-426-0279

b. Anemostat, Distributed by R.E. Edwards, Dublin, California, 925-829-2942

c. Vetrotech Saint Gobain, www.vetrotechusa.com, 888-803-9533

D. Glazing Accessories:

1. Cleaners, Primers, and Sealers: Types recommended by sealant or gasket manufacturer.

2. Glazing Tape: Closed cell polyvinyl chloride foam, maximum water absorption by volume 2 percent, designed for 25 percent compression percent for air barrier and vapor retarder seal, black color, coiled on release paper over adhesive on two sides; widths required for specified installation, and complying with AAMA 800.

3. Glazing Gaskets:

a. Dense Compression Gaskets: ASTM C864, neoprene or EPDM, or ASTM C1115, silicone or thermoplastic polyolefin rubber, as recommended by glazing product manufacturer for application, molded or extruded shape to fit glazing channel retaining slot; black color.

b. Soft Compression Gaskets: ASTM C509, Type II, black, molded or extruded, neoprene, EPDM, silicone or thermoplastic polyolefin rubber, of profile and hardness required to maintain watertight seal.

4. Setting Blocks: ASTM C864, neoprene, 80 to 90 Shore A durometer hardness; length 4 inches, width of glazing rabbet space less 1/16 inch, height required for glazing method, pane weight, and pane area.

5. Spacer Shims: ASTM C864, neoprene, 50 to 60 Shore A durometer hardness; length 3 inches, one half height of glazing stop, thickness required for application, one face self-adhesive.

6. Edge Blocks: Elastomeric material of hardness needed to limit glass lateral movement (side walking).

7. Glazing Sealants: ASTM C920, type recommended by glazing product

manufacturer for application indicated, complying with requirements of Section 079000, Joint Protection: Sealants and Caulking, color as selected by Architect.

8. Cylindrical Glazing Sealant Backing: ASTM C1330, Type O (open-cell material), of size and density to control glazing sealant depth and otherwise produce optimum glazing sealant performance.

2.3 FABRICATION OF GLAZING UNITS

A. General: Fabricate glazing units in dimensions required, with edge and face clearances, edge and surface conditions, and bite in accordance with glazing product manufacturer/fabricator's instructions and referenced glazing publications.

1. Tempered units: Entrance Doors (Storefront) and side lights.

2. Annealed units: Windows.

3.0 EXECUTION

3.1 EXAMINATION OF SURFACE CONDITIONS

A. Prior to work of this Section, carefully inspect the installed work of other trades and verify that all such work is complete to the point where the work of this Section may properly commence.

1. Verify that glazing may be performed in strict accordance with all pertinent codes and regulations, the original design, and the referenced standards.

B. Verify that glazing channels are clean and ready to accept glazing installation, and that weeps are unobstructed. Confirm that minimum required face and edge clearances will be maintained.

C. Examine glazing units prior to setting. Reject units that display edge or face damage that may impede performance of unit or that will be visible when installed.

D. In the event of discrepancy, immediately notify the County. Do not proceed with glazing in areas of discrepancy until all such discrepancies and unsatisfactory conditions have been fully resolved and corrected.

3.2 PREPARATION

A. Clean glazing channels with recommended solvent and wipe dry. Apply primers to

joint surfaces to ensure adhesion of sealants, unless preconstruction sealant-substrate testing indicates no primer is required.

3.3 GLAZING INSTALLATION

A. General: Install glass and glazing materials in accordance with instructions of manufacturers and requirements of GANA Glazing Manual.

1. Set glazing material in a true plane, tight and straight, allowing for expansion in accordance with manufacturers published recommendations, using compression gaskets, glazing, tape and sealant in accordance with manufacturer's recommendations.

2. Install setting blocks of size and in location required by glass manufacturer. Set blocks in bed of approved sealant. 3. Provide spacers for glass lites as recommended, based upon size of glass unit.

4. Comply with glass manufacturer’s limits on edge pressures.

5. Ensure that glazing units are set with proper and consistent orientation of glass units toward interior and exterior.

6. Provide edge blocking where recommended.

7. Install sealants in accordance with requirements of Section 079000, Joint Protection: Sealants and Caulking.

B. Tape Glazing: Place tapes on fixed stops positioned to be flush or protrude slightly when compressed by glass. Install tapes continuously. Form butt joints at corners and where required, and seal tape joints with approved sealant.

1. Apply heel bead of glazing sealant along intersection of permanent stop and frame for continuity of air and vapor seal.

2. Set glass lites centered in openings on setting blocks.

3. Install removable stops, and insert dense compression gaskets at corners, working toward centers of lites, compressing glass against tape on fixed stops.

4. Apply cap bead of elastomeric sealant over exposed edge of tape or gasket on exterior of glass unit.

C. Sealant Glazing: Install continuous spacers between glass lites and glazing stops. Install cylindrical sealant backing where recommended, in width and depth recommended to provide proper depth and width of sealant bead. Ensure sealant cannot block weep system.

1. Install sealant under pressure to completely fill glazing channel without voids, with full bond to glass and channel surfaces. 2. Tool sealant bead to proper profile providing wash away from glass.

D. Sealant Glazing for Butt Glazing:

1. Brace glass in position for duration of glazing process

2. Mask edges of glass at adjoining glass edges and between glass edges and framing members.

3. Secure small diameter non-adhering foamed rod on back side of joint.

4. Apply sealant to open side of joint in continuous operation; completely fill joint without displacing foam rod; tool sealant surface smooth to concave profile.

5. Allow sealant to cure, then remove foam backer rod.

6. Apply sealant to opposite side; tool sealant smooth to concave profile.

7. Remove masking tape.

E. Gasket Glazing: Fabricate gaskets to fit openings exactly. Allow for stretching of gaskets during installation.

1. Set soft compression gasket against fixed stop or frame, secure, with bonded miter cut joints at corners.

2. Set glass lites centered in openings on setting blocks.

3. Install removable stops, and insert dense compression gaskets at corners, working toward centers of lites, compressing glass against soft compression gaskets and to produce a weathertight seal. Seal joints in gaskets. Allow gaskets to protrude past face of glazing stops.

3.4 CLEANING AND PROTECTION

A. Protect installed glass from damage. Attach streamers or warning tape to framing members, away from contact with glass. Remove nonpermanent labels.

B. Protect glass from contact with contaminating substances during construction. Immediately clean glass exposed to contamination using methods as recommended by glass manufacturer.

C. Within 5 working days prior to inspection for Substantial Completion, clean all exposed glass surfaces using methods recommended by manufacturer. Remove glazing compounds from framing surfaces.

1. Clean with a mild soap or detergent and lukewarm water, using a clean sponge or soft cloth. Rinse well with clean water. Do not use abrasive or highly alkaline cleaner, razor blades, benzene, acetone, gasoline or carbon tetrachloride. Avoid cleaning during times when surface is exposed to hot direct sun.

D. Remove and replace broken or damaged glass *at no cost to the Owner.*

END OF SECTION

SECTION 089000 – LOUVERS AND VENTS

1.0 GENERAL

1.1 SUMMARY

A. This Section includes all labor, materials, equipment, operations, or methods listed, mentioned or scheduled on the plans and/or herein specified, including all incidentals necessary and required for completion of work under this Section.

B. Provision of exterior fixed blade louvers as shown on project Drawings and as specified herein.

1.2 RELATED SECTIONS

A. Documents affecting work of this Section include, but are not necessarily limited to, General Conditions, Special Conditions and Division 1 of these Contract Documents.

B. Section 079000 - Sealants and Caulking: Provision of sealants.

C. Division 23 - Heating, Ventilating and Air-Conditioning (HVAC): Provision of ductwork connected to metal wall louvers.

1.3 REFERENCES

A. AAMA - American Architectural Manufacturers Association

1. 605.2 - Voluntary Specification for High Performance Organic Coatings on Architectural Extrusions and Panels.

B. AMCA - Air Movement and Control Association

1. 500 - Test Methods for Louvers, Dampers.

2. 511 - Certified Ratings Program for Air Control Devices.

C. ASTM - American Society for Testing and Materials

1. B209 - Standard Specification for Aluminum and Aluminum-Alloy Sheet and Plate.

2. B221 - Standard Specification for Aluminum-Alloy Extruded Bars, Rods, Wire, Shapes and Tubes.

3. C612 - Standard Specification for Mineral Fiber Block and Board Thermal Insulation.

D. AWS - American Welding Society

1. D1.2 - Structural Welding Code - Aluminum.

E. CBC - California Building Code, 2001 Edition

F. NAAMM - National Association of Architectural Metal Manufacturers

G. SMACNA - Sheet Metal and Air Conditioning Contractors National Association, Inc.

H. SSPC - The Society for Protective Coatings

1. 12 - Cold Applied Asphalt mastic (Extra thick Film).

1.4 DEFINITIONS

A. Louver Terminology: Refer to AMCA 501 for definitions of terms for metal louvers not otherwise defined in this Section or in referenced standards.

1.5 SYSTEM DESCRIPTION

A. Performance Requirements

1. Structural Performance: Engineer, fabricate and install exterior metal wall louvers to withstand the effects of loads and stresses from wind and normal thermal movement without evidencing permanent deformation of louver components including blades, frames, and supports; noise or metal fatigue caused by louver blade rattle or flutter; or permanent damage to fasteners and anchors.

2. Wind Load: Design and size members capable of withstanding negative and positive wind pressure in accordance with 2001 California Building Code with an Exposure C.

3. Normal thermal movement is defined as that resulting from the following maximum change (range) in ambient temperature. Base design calculations on actual surface temperatures of metals due to both solar heat gain and nighttime sky heat loss.

a. Temperature Change (Range): 100 degrees Fahrenheit.

4. Air-Performance, Water-Penetration, and Air-Leakage Ratings: Provide

louvers complying with performance requirements indicated as demonstrated by testing manufacturer's stock units of height and width indicated. Test units according to AMCA 500.

a. Perform testing on unpainted, cleaned, degreased units.

b. Perform water-penetration testing on louvers without screens.

c. Equivalent Air-Performance Ratings; Louvers having less free area than that specified or having a lower free area velocity at the static pressure loss specified may be considered for the Work provided their total air performance is equivalent to that specified. The burden of proof of equivalency is on the Contractor. For louvers to be considered equivalent, the product of their free area, for the size specified, and their free area velocity at the static pressure loss specified must be at least equal to the product of the specified free area and velocity. Also, their free area velocity at the static pressure loss specified must not result in water penetration of more than 0.01 ounce per square foot of free area, and they must meet all other requirements.

1.6 SUBMITTALS

A. Product Data: Submit manufacturer's product data for each type of product specified.

B. Shop Drawings: Submit shop drawings of louver units and accessories. Include plans, elevations, sections and details showing profiles, angles and spacing of louver blades; unit dimensions related to wall openings and construction; free areas for each size indicated; profiles of frames at jambs, heads and sills; and anchorage details and locations.

1. For installed products indicated to comply with certain design loadings, include structural analysis data sealed and signed by the qualified professional engineer who was responsible for their preparation.

2. Coordinate architectural sizes with mechanical required sizes.

C. Quality Control Submittals

1. Test Reports: Submit product test reports evidencing compliance of units with performance requirements indicated.

2. Certificates: Submit product certificates signed by louver manufacturers certifying that their products comply with the specified requirements and are licensed to bear the AMCA seal based on tests made according to

AMCA 500 and complying with the AMCA Certified Ratings Program.

1.7 QUALITY ASSURANCE

A. Welding Standards: Comply with applicable provisions of AWS D1.2.

1. Certify that each welder has satisfactorily passed AWS qualification Tests for welding processes involved and, if pertinent, has undergone recertification.

B. Engineer Qualifications: California licensed professional engineer and experienced in providing engineering services of the kind indicated that have resulted in the installation of louvers similar to this Project in material, design and extent and that have a record of successful in-service performance.

C. SMACNA Standard: Comply with SMACNA "Architectural Sheet Metal Manual" recommendations for fabrication, construction details and installation procedures.

1.8 PROJECT CONDITIONS

A. Field Measurements: Check actual louver openings by accurate field measurements before fabrication, and show recorded measurements on final shop drawings. Coordinate fabrication schedule with construction progress to avoid delaying the Work.

1. Where field measurements cannot be made without delaying the Work, guarantee opening dimensions and proceed with fabricating louvers without field measurements. Coordinate construction to ensure that actual opening dimensions correspond to guaranteed dimensions.

2.0 PRODUCTS

2.1 MANUFACTURERS

A. Acceptable Manufacturers: The Airolite Company; Construction Specialties, Inc.; Airline Products Co.; Arrow United Industries, or approved equal.

2.2 MATERIALS

A. Aluminum Extrusions: ASTM B221, Alloy 6063-T5.

B. Aluminum Sheet: ASTM B209, Alloy 3003 or 5005 with temper as required for forming, or as otherwise recommended by metal producer to produce required finish.

C. Fasteners: Of same basic metal and alloy as fastened metal or 300 series stainless steel, unless otherwise indicated Do not use metals that are corrosive or incompatible with joined materials.

1. Use types and sizes to suit unit installation conditions.

2. Use Phillips flat-head screws for exposed fasteners, unless otherwise indicated.

D. Bituminous Paint: Cold-applied asphalt mastic complying with SSPC Paint 12 except containing no asbestos fibers.

2.3 FABRICATION

A. General: Fabricate louvers to comply with requirements indicated for design, dimensions, materials, joinery, and performance.

B. Assemble louvers in shop to minimize field splicing and assembly. Disassemble units as necessary for shipping and handling limitations. Clearly mark units for reassembly and coordinated installation.

C. Maintain equal louver blade spacing, including separation between blades and frames at head and sill, to produce uniform appearance.

D. Fabricate frames, including integral sills, to fit in openings of sizes indicated, with allowances made for fabrication and installation tolerances of louvers, adjoining construction and perimeter sealant joints.

E. Include supports, anchorages and accessories required for complete assembly.

F. Provide sill extensions and loose sills made of same material as louvers where indicated or required for drainage to exterior and to prevent water penetrating to interior.

G. Join frame members to fixed louver blades as follows, unless otherwise indicated:

1. With fillet welds, concealed from view.

2. With fillet welds, concealed from view; or mechanical fasteners; or a combination of these methods; as standard with louver manufacturer.

2.4 FIXED, EXTRUDED-ALUMINUM WALL LOUVERS

A. Horizontal, Drainable, Fixed-Blade Louvers: Extruded-aluminum frames and louver blades, designed to collect and drain water to exterior at sill by means of

gutters in front edges of blades and channels in jambs and mullions, complying with the following requirements:

1. Louver Depth: 3-5/8 inches max, unless otherwise indicated.

2. Frame Thickness: 0.125-inch, unless otherwise indicated.

3. Blade Thickness: 0.125-inch, unless otherwise indicated.

4. Blade Angle: 45 degrees, unless otherwise indicated.

5. Performance Requirements: As follows, determined by testing units 48 inches wide by 48 inches high per AMCA 500:

   a. Free Area: Not less than 42%.

   b. Static Pressure Loss: Not more than 0.14 inch wg at an airflow of 900 fpm free area intake velocity.

   c. Water Penetration: Not more than 0.01 ounce per square foot of free area at an airflow of 900 fpm free area velocity when tested for 15 minutes.

2.5 SCREENS

A. General: Provide each exterior louver with screens complying with the following requirements:

1. Screen Location for Fixed Louvers: Interior face, unless otherwise indicated.

2. Screening Type: Insect screening throughout.

B. Secure screens to louver frames with stainless-steel machine screws, spaced 6 inches maximum from each comer and at 12 inches on center between.

C. Louver Screen Frames: Fabricate screen frames with mitered comers to louver sizes indicated and to comply with the following requirements:

1. Metal: Same kind and form of metal as indicated for louver frames to which screens are attached.

   a. Reinforce extruded-aluminum screen frames at comers with clips.

2. Finish: Same finish as louver frames to which louver screens are attached.

D. Louver Screening for Aluminum Louvers: Fit aluminum louver screen frames with screening covering louver openings.

2.6 FINISHES, GENERAL

A. Comply with NAAMM "Metal Finishes Manual" for recommendations relative to applying and designating finishes.

B. Finish louvers after assembly.

2.7 ALUMINUM FINISHES

A. Finish designations prefixed by AA conform to the system established by the Aluminum Association for designating aluminum finishes.

B. High-Performance Organic Coating: AA-C12C42R1x (Chemical Finish: leaned with inhibited chemicals; Chemical Finish: chemical conversion coating, acid chromate-fluoride-phosphate pretreatment; Organic Coating: as specified below). Prepare, pretreat, and apply coating to exposed metal surfaces to comply with coating and resin manufacturer's instructions.

1. Fluoropolymer 3 Coat Coating System: Manufacturer's standard 3 coat thermo-cured system, composed of specially formulated inhibitive primer and fluoropolymer color coat, and clear fluorocarbon topcoat containing not less than 70 percent polyvinylidene resin by weight; complying with AAMA 605.2.

a. Resin Manufacturers: Ausimont USA, Inc., "Hylar 5000"; Elf Atochem North America, Inc., Kynar 500.

b. Color and Gloss: Custom, as selected by the Architect.

3.0 EXECUTION

3.1 INSTALLATION

A. Locate and place louver units plumb, level and at indicated alignment with adjacent work.

B. Use concealed anchorages where possible. Provide brass or lead washers fitted to screws where required to protect metal surfaces and to make a weathertight connection.

C. Form closely fitted joints with exposed connections accurately located and secured.

D. Provide perimeter reveals and openings of uniform width for sealants and joint fillers, as indicated.

E Repair finishes damaged by cutting, welding, soldering and grinding operations required for fitting and jointing. Restore finishes so there is no evidence of corrective work. Return items that cannot be refinished in the field to the shop, make required alterations and refinish entire unit, or provide new units.

F. Protect nonferrous metal surfaces from corrosion or galvanic action by applying a heavy coating of bituminous paint on surfaces that will be in contact with concrete, masonry or dissimilar metals.

G. Install concealed gaskets, flashings, joint fillers and insulation, as louver installation progresses, where required to make louver joints weathertight. Comply with Section 079000 for sealants applied during installation of louver.

3.2 ADJUSTING AND PROTECTION

A. Protect louvers from damage of any kind during construction period including use of temporary protective coverings where needed and approved by louver manufacturer. Remove protective covering at time of Substantial Completion.

B. Restore louvers damaged during installation and construction period, so that no evidence remains of correction work. If results of restoration are unsuccessful, as judged by the Architect, remove damaged units and replace with new units.

1. Clean and touch up minor abrasions in finishes with air-dried coating that matches color and gloss of, and is compatible with, factory-applied finish coating.

3.3 CLEAN UP

A. Periodically clean exposed surfaces of louvers that are not protected by temporary covering to remove fingerprints and soil during construction period. Do not let soil accumulate until final cleaning.

B. Before final inspection, clean exposed surfaces with water and a mild soap or detergent not harmful to finishes. Rinse surfaces thoroughly and dry.

END OF SECTION

Division 9:
Finishes

SECTION 092400 – PORTLAND CEMENT PLASTERING

1.0 GENERAL

1.1 SUMMARY

A. This Section includes all labor, materials, equipment, operations, or methods listed, mentioned or scheduled on the plans and/or herein specified, including all incidentals necessary and required for completion of work under this Section.

1. Provision of exterior portland cement plaster.

2. Provision of lath, and lathing accessories.

3. Provision of building paper.

1.2 RELATED SECTIONS

A. Documents affecting work of this Section include, but are not necessarily limited to, General Conditions, Special Conditions and Division 1 of these Contract Documents.

B. Section 054000 - Cold-Formed Metal Framing: Provision of framing.

C. Section 072116 - Blanket Insulation: Provision of thermal insulation.

D. Section 079000 – Sealants and Caulking: Provision of sealants.

E. Section 092900 - Gypsum Board: Provision of gypsum sheathing.

F. Section 099100 - Painting: For finish painting.

1.3 REFERENCES

A. ASTM - American Society for Testing and Materials

1. C150 - Standard Specification for Portland Cement.

2. C897 - Standard Specification for Aggregate for Job-Mixed Portland Cement- Based Plasters.

3. C926 - Standard Specification for Application of Portland Cement-Based Plaster.

4. C954 - Specification for Steel Drill Screws for the Application of Gypsum Board or Metal Plaster Bases to Steel Studs from 0.33 in. to 0.112 in. in Thickness.

5. C1063 - Specification for Installation of Lathing and Furring for Portland Cement-Based Plaster.

B. CBC – California Building Code, 2016 Edition

C. CLPCA - California Lathing and Plastering Contractors Association, Inc.

1. Plaster/Metal Framing Systems; Lath Manual, 1977 edition. Lathing and Plastering Reference Specifications.

D. FS - Federal Specifications

1. UU-B-790A - Building Paper, Vegetable Fiber (Kraft, Waterproofed, Water Repellent and Fire Resistant).

E. ML/SFA - Metal Lath/Steel Framing Association

1. Specifications for Metal Lathing and Furring, and Metal Lath Technical Bulletins.

1.4 SYSTEM DESCRIPTION

A. Performance Requirements

1. Wind Loading: System shall withstand dead and live loads caused by pressure and suction of wind in accordance with CBC Section 2311.

2. Sheathing, lath and related accessories shall provide proper secure base and reinforcement for plaster system.

3. Allowable Tolerances: 1/8-inch in 10 feet maximum inward, and outward allowance not occurring in less than 20 feet.

1.5 SUBMITTALS

A. Samples: Provide minimum 24 inch square panels for each plaster system specified to demonstrate ability to achieve texture finishes required and to serve as standard of acceptance for the work. Sample shall to be approved by the Architect.

1.6 QUALITY ASSURANCE

A. Comply with CLPCA manual unless exceed by these Specifications.

2.0 PRODUCTS

2.1 LATH MATERIALS

A. Gypsum Sheathing: As specified in Section 09 29 00.

B. Building Paper; Asphalt saturated organic felt, ASTM D226, Grade D 60 minute permeability rated.

C. Metal Lath: Self furring V-grooved galvanized mil certified prime steel ASTM A924 G-60.

D. Accessories

1. General: Comply with material provisions of ASTM C1063 and requirements below. Coordinate depth of accessories with thicknesses and number of plaster coats required.

   a. Zinc-Alloy Components: ASTM B69, 99 percent pure zinc.

2. Comer and Strip Reinforcement: Expanded large-mesh diamond metal lath fabricated from zinc-alloy or welded wire mesh fabricated from 0.0475-inch diameter zinc-coated (galvanized) wire and specially formed to reinforce external comers of Portland cement plaster on exterior exposures while allowing full plaster encasement.

3. Metal Comer Beads: Small nose comer beads fabricated from zinc alloy, minimum 0.0207-inch thick, with expanded flanges of expanded large-mesh diamond metal lath to allow full encasement by plaster.

4. Casing Beads: Square-edged style, with short flanges and removable protective tape, of zinc alloy, minimum 0.0207-inch thick.

5. Control Joints

   a. Prefabricated folded pair of nonperforated screeds in M-shaped configuration, with expanded or perforated flanges, of zinc alloy, minimum 0.0207-inch thick. Review locations with the Architect prior to installation.

   b. 2 Piece Control Screed: Aluminum, extruded alloy 6063 T5, with clear anodized finish, as manufactured by Fry Reglet, “21-Piece Plaster Control Screed", or equal.

6. Foundation Weep Screed: Manufacturer's standard profile designed for use at sill plate line to form plaster stop and prevent plaster from contacting damp earth, fabricated from light gray rigid vinyl as manufactured by Fry Reglet, “Foundation Weep Screed FWS-875", or equal.

7. Drip Screed: Vented, aluminum, extruded alloy 6063 T5, with clear anodized finish, complete with fasteners, as manufactured by Fry Reglet, "Stucco Drip Screed DS-875-V-875", or equal.

8. Transition Pieces: Aluminum, complete with fasteners, as indicated and as manufactured by Fry Reglet, or equal.

9. Screws: Industry standard galvanized screws for galvanized and plastic accessories.

10. Ventilating Screeds for Soffits: Perforated vent with integral flanges to receive plaster 2 sides of vent.

2.2 PORTLAND CEMENT PLASTER MATERIALS

A. Portland Cement: ASTM C150, White Portland Cement, Type I.

B. Sand for Portland Cement: ASTM C897.

C. Aggregate for Finish Coats: ASTM C897.

D. Hydrated Lime: ASTM C206, Type S.

E. Fiber for Base Coat: 1/2-inch chopped alkali resistant fiberglass strands, minimum 1/2-pound per sack of cement.

F. Reinforcing Glass Fiber Mesh: As manufactured by Perma-Glass Mesh Co., “207A”, or equal.

G. Water Clean and potable and free of substances capable of affecting plaster set or of damaging plaster, lath, or accessories.

H. Job Mixed Finish Coat: As manufactured by La Habra products, INC. or King Stucco, Inc.

I. Textures: As described in the Portland Cement Association’s “Plaster/Stucco Manual” and as indicated on the Drawings.

1. Texture A: “California” texture.

2. Texture B: "Light Dash" texture.

2.3 PORTLAND CEMENT PLASTER MIXES AND COMPOSITIONS

A. General: Comply with ASTM C926 for base and finish coat mixes as applicable to plaster bases, materials, and other requirements indicated.

B. Base Coat Mixes and Compositions: Proportion materials for base coat in parts by volume per sum of cementitious materials for aggregates to comply with the following. Adjust mix proportions below within limits specified to attain workability.

1. Fiber Content Add fiber to following mixes after ingredients have mixed at least 2 minutes. Comply with fiber manufacturer's directions but do not to exceed 1/2-pounds per cubic foot of cementitious materials. Reduce aggregate quantities accordingly to maintain workability.

2. 3 Coat Work over Metal Lath: Base coats as indicated below.

a. Scratch Coat: 1 part Portland cement, 3-1/2 parts aggregate and sufficient lime for workability, not exceed 10 pounds per sack of cement. Mix with 2 pounds glass fibers per sack of cement.

b. Brown Coat 1 part portland cement, not more than 4 parts aggregate. Mix with 1 part acrylic modifier and 3 parts water.

C. Job-Mixed Finish Coats: 1 part portland cement, 3 parts aggregate, pure mineral oxide. Mix with 1 part acrylic modifier and 3 parts water.

2.4 MIXING

A. Mechanically mix cementitious and aggregate materials for plasters to comply with applicable referenced application standard and with recommendations of plaster manufacturer.

3.0 EXECUTION

3.1 PREPARATION

A. Gypsum Sheathing: As specified in Section 092900.

B. Building Paper

1. Cover gypsum sheathing with building paper as follows:

a. Apply asphalt-saturated organic felt horizontally with 2 inch overlap and 6 inch endlap; fasten to framing with corrosion resistant staples or screws.

b. Apply building paper to cover upstanding flashing with 4 inch overlap.

c. Apply building paper over sheathing as soon as practical after sheathing installation to prevent deterioration from wetting.

3.2 INSTALLATION OF PLASTERING ACCESSORIES

A. Accessories for Portland Cement Plaster

1. External Comers: Install comer beads at external comers.

2. Casing Beads: Install at terminations of plaster work unless otherwise indicated.

3. Ventilating Screeds at Soffits: Install screeds in soffits where indicated.

4. Reinforcing Mesh: Before applying finish coat install reinforcing mesh. Place 4 inch by 12 inch butterflies diagonally at comers of rectangular openings. Place minimum 4 inch wide collars around all penetrations. Horizontal or vertical laps shall be a minimum of 1 inch.

B. Install metal lath to comply with referenced standards and ASTM C1063 for installation of lathing and furring for Portland cement plaster. Attach lath using galvanized screws.

3.3 PLASTER APPLICATION

A. Portland Cement Application Standard: Apply portland cement plaster materials, compositions, and mixes to comply with ASTM C926, including recommendations for time between coats and curing in “Annex A2 Design Considerations”.

1. Sequence plaster application with the installation and protection of other work so that neither will be damaged by the installation of the other.

2. Do not use materials that are frozen, caked, lumpy, dirty or contaminated by foreign materials.

3. Do not use excessive water in the mixing and application of plaster materials.

4. Comers: Make internal comers and angles square; finish eternal corners square and true with plaster faces on exterior work.

5. Apply scratch coat to a 1/2-inch thickness and score lightly in a horizontal direction only, keeping surface moist for 48 hours using a fine fog spray of water.

6. Apply brown coat to 3/8-inch thickness over scratch coat. Brown coat shall be floated to provide even, level surface, with no variation greater than 1/4-inch in 8 feet-0 inches. Do not rod brown coat.

   a. Cure brown coat with a very fine fog spray of water after brown coat has achieved initial film formation, not sooner than 30 minutes, to prevent checking. Cure 14 days minimum.

7. Apply finish coat to a minimum thickness of 1/8-inch to completely cover base coat, uniformly floated to a true even plane with a finish matching existing.

   a. Apply thin coat of stucco and then double back with second application to a minimum 1/8-inch thickness, completely finish one operation and avoiding joinings. Avoid thick coats, if build up is needed, apply in successive thinner coats.

   b. Apply in full wall at a time, without lifts in scaffolding. Finish work may not show stops in work or horizontal patterns resulting from lifts.

B. Tolerances: Do not deviate more than 1/8-inch in 10 feet-0 inches from a true plane in finished plaster surfaces, as measured by a 10 feet-0 inches straightedge placed at any location on surface.

3.4 CUTTING AND PATCHING

A. Repair cracks and indented surfaces. Point-up finish plaster surfaces around items that are built into or penetrate plaster surfaces. Repair or replace the work to eliminate blisters, buckles, check cracking, dry outs, efflorescence, excessive pinholes, and similar imperfections. Repair or replace the work as necessary to comply with required visual effects.

END OF SECTION

SECTION 092900 – GYPSUM BOARD

1.0 GENERAL

1.1 SUMMARY

A. This Section includes all labor, materials, equipment, operations, or methods listed, mentioned or scheduled on the plans and/or herein specified, including all incidentals necessary and required for completion of work under this Section.

B. Section Includes:

1. Provision of gypsum board screw attached to wood framing and furring members, joint treatment and accessories.

3. Installation of sound deadening insulation in walls and ceilings and including acoustical sealant, tape and the like for work of this Section.

C. Products Installed but not Furnished under this Section

1. Sound deadening insulation as specified in Section 072116.

2. Acoustical sealant as specified in Section 079000.

1.2 RELATED SECTIONS

A. Documents affecting work of this Section include, but are not necessarily limited to, General Conditions, Special Conditions and Division 1 of these Contract Documents.

B. Section 079000 - Sealants and Caulking

C. Section 083113 - Access Doors and Frames

D. Section 099100 - Painting.

1.3 REFERENCES

A. ASTM - American Society for Testing and Materials

1. C36 - Standard Specification for Gypsum Wallboard.

2. C79 - Test Method for Gypsum Sheathing Board.

3. C475 - Standard Specification for Joint Treatment materials for gypsum Wallboard Construction.

4. C630 - Standard Specification for Water-Resistant Gypsum Backing Board.

5. C840 - Standard Specification for Application and Finishing of Gypsum Board

6. C954 - Standard Specification for Steel Drill Screws for the Application of Gypsum Board or Metal Plaster Bases to Steel Studs from 0.33 in. (0.84 mm) to 0.112 in. (2.84 mm) in Thickness.

7. C1002 - Standard Specification for Steel Drill Screws for the Application of Gypsum Board or Metal Plaster Bases.

8. C1047 - Standard Specification for Accessories for Gypsum Wallboard and Gypsum Veneer Base.

9. D226 - Standard Specification for Asphalt-Saturated Organic Felt Used in Roofing and Waterproofing.

10. E119 - Method for Fire Tests of Building Construction and Materials.

11. E136 - Standard Test Method for Behavior of Materials in a Vertical Tube Furnace at 750 Degrees C.

B. CBC - California Building Code, 2016 Edition

C. GA - Gypsum Association

1. 216 - Application and Finishing of Gypsum Board.

D. UL - Underwriters Laboratories, Inc.

1.4 SYSTEM DESCRIPTION

A. Design Requirements: Where indicated, provide materials and construction which are identical to those assemblies whose fire resistance rating has been determined in accordance with ASTM E119 by a testing and inspecting organization acceptable to authorities having jurisdiction.

1.5 SUBMITTALS

A. Product Data: Submit manufacturer's product data. Include the following:

1. Fire Resistance Data: Include required fire test results for gypsum board systems on partitions, ceilings and columns. Correlate with supporting steel framing details.

2. Sound Transmission Data: Include certified evidence that installed gypsum board systems and materials meet required STC levels.

1.6 QUALITY ASSURANCE

A. Fire Test Response Characteristics: Where fire resistance rated gypsum board assemblies are indicated, provide gypsum board assemblies that comply with the following requirements:

1. Fire Resistance Ratings: As indicated by GA File Numbers in GA-600 "Fire Resistance Design Manual" or design designations in UL "Fire Resistance Directory" or in the listing of another testing and inspecting agency acceptable to authorities having jurisdiction.

2. Gypsum board assemblies indicated are identical to assemblies tested for fire resistance according to ASTM E119 by an independent testing and inspecting agency acceptable to authorities having jurisdiction.

3. Deflection and Firestop Track: Top runner provided in fire resistance rated assemblies indicated is labeled and listed by UL, Intertek Testing Agency, or another testing and inspecting agency acceptable to authorities having

jurisdiction.

1.7 DELIVERY, STORAGE, AND HANDLING

A. Acceptance at Site: Deliver materials in original packages, containers or bundles bearing brand name and identification of manufacturer or supplier. Verify board and accessories as undamaged.

B. Storage and Protection

1. Store materials inside under cover and keep dry and protected against damage from weather, direct sunlight, surface contamination, corrosion, construction traffic and other causes. Neatly stack gypsum boards flat to prevent sagging.

2. Handle gypsum boards to prevent damage to edges, ends and surfaces.

1.8 PROJECT CONDITIONS

A. Environmental Conditions

1. Establish and maintain environmental conditions for application and finish gypsum board to comply with ASTM C840 and with gypsum board manufacturer's recommendations. Maintain not less than 40 degrees Fahrenheit minimum room temperature.

2. Ventilate building spaces to remove water not required for drying joint treatment materials. Avoid drafts during day, hot weather to prevent materials from drying too rapidly.

2.0 PRODUCTS

2.1 MANUFACTURERS

A. Acceptable Manufacturers: United States Gypsum Co.; Gold Bond Building Products Div., National Gypsum Co.; Pacific Coast Building Products, Pabco Gypsum Division, or equal.

2.2 MATERIALS

A. Gypsum Board Types

1. Typical board, ASTM C630, Type X, tapered edges, complete with edge sealant for job cut edges, 48 inches wide, 5/8-inch thick.

C. Fasteners

1. Screws: ASTM C1002, Type “S" steel drill screws for fastening gypsum board to gypsum board, and steel framing members less than 0.033-inch thick. ASTM C954 Type “S-12" steel drill screws for fastening gypsum board to steel framing members 0.033 to 0.112-inch thick.

D. Insulation: As specified in Section 072116.

E. Accessories

1. Comer Beads and Casing Beads: ASTM C1047, sheet steel zinc coated by hot-dip process. Flanges shall be free of dirt, grease and other materials that may adversely affect bond of joint treatment.

2. Reveal Base: Where indicated on drawings, provide extruded aluminum base with a reveal depth of 5/8-inch and a reveal width of 8 inches.

F. Joint Treatment Materials: Products of one manufacturer conforming to ASTM C475, ASTM C840 and recommendations of manufacturer of both gypsum board and joint treatment materials for application indicated. Conform to GA 201 and GA 216 for reinforcing tape, joint compound and water.

1. Joint Tape

a. Cross-laminated, tapered edge, reinforced paper or fiber glass mesh tape as recommended by setting type joint compound manufacturer.

b. Fiberglass mesh tape for use with gypsum sheathing board with water-resistant core.

2. Setting Type Joint Compound: Factory prepackaged, job mixed, chemical hardening powder products formulated for uses indicated or factory premixed product.

G. Acoustical Sealant: As specified in Section 079000.

2.3 FINISHES

A. Levels of Gypsum Board Finish as Defined by GA

1. Level 1

a. Ceiling Plenum Areas, Concealed Areas, and Where Indicated: All joints and interior angles shall have tape embedded in joint compound. Surface shall be free of excess joint compound Tool marks and ridges are acceptable.

2. Level 5

a. All other areas: All joints and interior angles shall have tape embedded in joint compound and 3 separate coats of joint compound applied over all joints, angles, fastener heads and accessories. A thin skim coat of joint compound or a material manufactured especially for this purpose, shall be applied to entire surface. Surface shall be smooth and free of tool marks and ridges.

3.0 EXECUTION

3.1 EXAMINATION

A. Examine areas and surfaces to receive gypsum board and verify the following:

1. Proper alignment and spacing of backing and framing support systems.

2. Complete installation of mechanical, electrical or other items to be enclosed in partitions that cannot be installed after installation of board.

3.2 PREPARATION

A. Protect surrounding areas and surfaces to preclude damage.

1. Exercise care to avoid soiling, spatter and damage to work of other trades.

2. Use cover clots or other means of protection. Remove, clean and repair any soiled or damaged work as required.

3. Protect from damage at all times.

3.3 INSTALLATION

A. Gypsum Board

1. Install and finish gypsum board to comply with ASTM C840 or GA 216.

a. Single Layer; Install in accordance with ASTM C840, except as amended or required by specific fire resistive or sound isolation system detailed. In that instance, application shall conform to requirements of the manufacturer's tests as reviewed and accepted in the submittal.

b. Double Layer: Conform to applicable portions of ASTM C840, System Classification VIII for installations applied with screws. Conform to required fire resistance standards.

2. Apply in vertical direction with ends and edges falling on supports. In vertical applications, gypsum board shall be of length required to reach full height of vertical surfaces in one continuous piece.

3. Position boards so that like edges abut, tapered edges against tapered edges and field cut ends against field cut ends. Do not place tapered edges against cut edges or ends. Stagger vertical joints over different studs on opposite sides of partitions.

4. Start installation of panels at exterior wall to position butt joints as far

away from exterior wall as possible.

C. Sound Retardant Installations

1. Follow manufacturer's directions and specifications for conditions of installation. Install where indicated. Install from floor surface to bottom side of next floor surface.

a. Wrap with insulation and seal electrical or other outlets in sound isolating partitions.

b. Install sealant to completely fill void between gypsum board edges and adjacent surface.

D. Wet Locations

1. At Walls and Ceilings: Conform to ASTM C840, System Classification X.

2. Treat cut edges and holes in water resistant gypsum board with sealant

E. Fastenings: Attach gypsum board to framing with screws, lengths and sizes as recommended by manufacturer and in accordance with CBC.

F. Access Doors: Install gypsum board into access door frames specified in Section 083113 where required and where indicated on the Drawings. Anchor firmly into position, and align properly to achieve an installation flush with adjacent finished surfaces.

G. Accessories

1. Install comer beads at vertical and horizontal external comers.

2. Install casing beads whenever edge of gypsum board would otherwise be exposed or semi-exposed, or where abutting dissimilar materials.

3. After accessories are installed, correct surface damage and defects.

4. Install trims and expansion joints where required.

H. Allowable Tolerances

1. Offset Between Planes of Board Faces: 1/16-inch.

2. Plane, Level, Warp and Bow: 1/8-inch in 8 feet-0 inches.

3. Shim panels as necessary to comply with tolerances.

3.4 FINISHING OF GYPSUM BOARD

A. Apply joint treatment at gypsum board joints; flanges of corner bead, edge trim and penetrations, fastener heads and surface defects in accordance with ASTM C840 or GA 216. Number of coats of treatment shall be as specified above.

B. Apply joint tape at joints between gypsum boards.

C. Finish interior gypsum board by applying the number of coats of treatment as specified above. Sand between coats and after last coat.

D. Finish Painting: As specified in Section 099100.

E. Caulking

1. Caulk openings around pipes, fixtures and other items projecting through gypsum board as specified in Section 079000.

2. Caulk top of fire rated walls and partitions and penetrations through fire rated walls and partitions in accordance with Section 078400.

3. Apply caulking material with exposed surface flush with gypsum board.

3.5 FIELD QUALITY CONTROL

A. Installer shall be present at the Architect's inspection of Work. Touch up as required and directed subsequent to finish application.

3.6 CLEAN UP

A. Clean all beads, screeds, metal base, metal trim, mechanical and electrical items.

1. Wipe clean, leaving work ready for finish specified under other Sections.

2. As work is completed in each space, clean all rubbish, utensils and surplus materials from the space. Leave floors broom clean.

3.7 PROTECTION

A. Provide protection to gypsum board construction from damage or deterioration.

END OF SECTION

SECTION 095100 – ACOUSTICAL CEILINGS

1.0 GENERAL

1.1 SUMMARY

A. This Section includes all labor, materials, equipment, operations, or methods listed, mentioned or scheduled on the plans and/or herein specified, including all incidentals necessary and required for completion of work under this Section.

B. Provision of suspension ceiling systems as shown on project Drawings and as specified herein.

1.2 RELATED SECTIONS

A. Documents affecting work of this Section include, but are not necessarily limited to, General Conditions, Special Conditions and Division 1 of these Contract Documents.

B. Section 072116 - Blanket Insulation: Provision of acoustical insulation.

C. Section 092900 - Gypsum Board: Provision of gypsum board wall surfaces.

D. Division 23 - Heating, Ventilating, and Air-Conditioning (HVAC): Provision of mechanical work to be performed above suspended acoustical ceilings.

E. Division 26 - Electrical: Provision of electrical work to be performed above suspended ceilings.

1.3 REFERENCES

A. ASTM - American Society for Testing and Materials

1. C636 - Standard Practice for Installation of Metal Ceiling Suspension Systems for Acoustical Tile and Lay-In Panels.

2. E84 - Test Method for Surface Burning Characteristics of Building Materials.

3. E1264 - Classification for Acoustical Ceiling Products.

B. CBC - California Building Code, 2016 Edition

C. UL - Underwriters Laboratories, Inc.

1. FRD - Fire Resistance Directory.

1.4 SYSTEM DESCRIPTION

A. Design Requirements: Architectural reflected ceiling plan drawings shall govern over Mechanical and Electrical Drawings.

1.5 SUBMITTALS

A. Product Data: Submit manufacturer’s product data completely describing products.

B. Shop Drawings: Show complete ceiling layouts, methods and details of installation, and information required for related work.

C. Samples

1. Acoustical Materials: 1 panel of each type specified.

D. Quality Control Submittals

1. Manufacturer’s Instructions: Submit manufacturer's installation instructions.

1.6 QUALITY ASSURANCE

A. Qualifications: Installer shall have completed at least 3 previous projects of similar size and complexity.

B. Regulatory Requirements

1. Fire Resistive Ceilings: Install fire rated ceiling systems in accordance with CBC and UL FRD listing and requirements of agency having jurisdiction.

1.7 DELIVERY, STORAGE AND HANDLING

A. Packing and Shipping: Deliver and store packaged products in original containers with seals unbroken and labels intact until time of use.

B. Storage and Protection

1. Keep materials dry by storing off ground; under watertight covers.

2. Immediately before installation, panels shall be stored for sufficient time to stabilize temperature and humidity conditions ambient during installation and anticipated for occupancy.

3. Panel Grilles: Store flat and level in a fully enclosed space. Store panel grilles in the room in which they will be installed for a minimum 72 hours immediately prior to ceiling installation. The temperature and humidity of the room shall closely approximate those conditions that will exist when the building is occupied. Panel grilles must be stored off the floor.

1.8 PROJECT CONDITIONS

A. Environmental Requirements: Do not begin work until residual moisture has dissipated and comply with the following:

1. Acoustical Ceilings: Maintain uniform temperature of minimum 60 degrees Fahrenheit and maximum of 90 degrees Fahrenheit and humidity of 20 to 40 percent but no more than 90 percent prior to, during and after installation.

1.9 SEQUENCING AND SCHEDULING

A. Schedule installation of acoustic units after interior wet work is dry.

B. Coordinate installation of ceilings with mechanical and electrical work.

1.10 MAINTENANCE

A. Extra Materials: Provide 5 percent extra quantity of each type of acoustical

surface installed. Provide in original unbroken containers plainly marked with type and quantity of contents.

2.0 PRODUCTS

2.1 MANUFACTURERS

A. Armstrong World Industries, Inc., www.armstrongceilings.com, 1-877-ARMSTRONG.

2.2 MATERIALS

A. Suspended Acoustical Ceiling AT-1

1. Panels: Armstrong Ultima Square Lay-In panels with moisture resistant wet formed mineral fiber with factory applied vinyl latex paint, mildew resistant, and with the following properties:

    a. Light Reflectance: Minimum LR 0.87 in accordance with ASTM E1264.

    b. NRC Range: Up to 0.75

    c. Surface Burning Characteristics: Class A in accordance with ASTM E84, with flame spread 25 or under.

    d. Size: See Schedule

    e. Color: White

    f. Edge: Square

2. Mechanical Suspension System: Prelude, heavy-duty, exposed grid system for square edge ceiling panels, double-web tees, steel body with exposed surfaces factory painted with baked polyester paint.

    a. Provide panel centering devices built into each grid member.

    b. Pull out tension values greater than 300 pounds.

c. Where the Drawings indicate a sloped ceiling provide additional components as recommended by the manufacturer for a seismic slope ceiling condition.

d. Color: Blizzard White

d. Width: 15/16-inch.

B. Fasteners and Attachments

1. 12 gauge (minimum) hanger wires may be used for up to and including 4 feet by 4 feet grid spacing and shall be attached to main runners.

2. Provide 12 gauge hanger wires at the ends of all main and cross runners within 8 inches of the support or within 1/4 of the length of the end tee, whichever is least, for the perimeter of the ceiling area. End connections for runners that are designed and detailed to resist the applied vertical and horizontal forces may be used in lieu of the 12 gauge hanger wires, subject to cCity review and approval.

3. Provide trapeze or other supplementary support members at obstructions to typical hanger spacing. Provide additional hangers, struts or braces as required at all ceiling breaks, soffits or discontinuous areas. Hanger wires that are more than 1 in 6 out of plumb are to have counter-sloping wires.

4. Ceiling grid members may be attached to not more than 2 adjacent walls. Ceiling grid members shall be at least 1/2-inch free of other walls. If walls run diagonally to ceiling grid system runners, one end of main and cross runners should be free, and a minimum of 1/2-inch clear of wall.

5. At the perimeter of the ceiling area where main or cross runners are not connected to the adjacent wall, provide interconnection between the runners at the free end to prevent lateral spreading. A metal strut or a 16 gauge wire with a positive mechanical connection to the runner may be used Where the perpendicular distance from the wall to the first parallel runner is 12 inches or less, this interlock is not required.

6. Provide bracing assemblies consisting of a compression strut and 4 each

12 gauge splayed bracing wires oriented 90 degrees from each other at the following spacing:

a. Place bracing assemblies at a spacing not more than 12 inches by 12 inches on center.

b. Provide bracing assemblies at locations not more than one half the spacings given above, from each perimeter wall and at the edge of vertical ceilings offsets. The slope of these wires shall not exceed 45 degrees from the plane of the ceiling and shall be taut Splices in bracing wires are not permitted.

c. Suspended acoustical ceiling systems with a ceiling area of 144 square feet or less, and fire rated suspended acoustical ceiling systems with a ceiling area of 96 square feet or less, surrounded by walls which connect directly to the structure above, do not require bracing assemblies when attached to 2 adjacent walls.

E. Accessories

1. Light Fixture Protection and Hold Down Clips: Provide light fixture protection panels, fasteners and hold down clips if required by UL FRD listing, manufacturer’s standard types.

2. Edge Moldings: Profiles as indicated. Factory finish to match exposed suspension system components.

3. Aluminum Cross Baffles: Provide white aluminum cross baffle panels, 0.018- to 0.020-inch thick. Provide 12 inch wide by 48 inch long by 1 inch high panels. Mitre comers.

   a. Product: Ecolite, (509) 922-8888, “BFL-IOO"; ALP Products, “CB Series", or equal.

4. Interior Ceiling Closures: Sheet steel or aluminum formed and bent to profiles indicated. Prefinished white. All edges and ends hemmed or returned. All splices butt with concealed mechanical connectors. Field verify dimensions prior to fabrication.

2.3 SCHEDULE

ACOUSTIC CEILING TILES				
Reference #	**Series**	**Size**	**Color**	**Pattern**
AT-1	Ultima Lay-In	24” x 60” x 15/16”	White	See Drawings
Note: Verify location, type and size with drawings				

3.0 EXECUTION

3.1 EXAMINATION

A. Examine areas to receive acoustical treatment and verify that:

1. Installation of building components located in ceiling plenum is complete.

2. Spacing, direction and details of grid members and supports to accommodate installation of light fixtures, diffusers and other ceiling located items are correct.

3. Areas are clean and free of materials or rubble that could damage acoustical surfaces.

B. Do not start work until unsatisfactory conditions are corrected.

3.2 INSTALLATION

A. Suspended Ceiling Systems

1. Install acoustical material and suspension system, including necessary hangers and other supporting hardware in accordance with manufacturer's instructions and ASTM C636.

2. Lay work out symmetrically about centers of rooms and provide symmetrical borders not less than half size of tile specified unless noted otherwise on the Drawings.

3. Make penetrations through ceiling panels in such a manner to ensure tight fit and neat appearance. Center penetrations in tile unless otherwise noted.

B. Suspension System

1. Fasten hanger wires with not less than 3 tight turns. Fasten bracing wires with 4 tight turns. Make all tight turns within a distance of 1-1/2 inches. Hanger or bracing wire anchors to the structure should be installed in such a manner that the direction of the wire aligns as closely as possible with the direction of the forces acting on the wire.

   a. Wire turns made by machine where both strands have been deformed or bent in wrapping can waive the 1-1/2 inch requirement, but the number of turns should be maintained, and be as tight as possible.

2. Separate all ceiling hanging and bracing wires at least 6 inches from all unbraced ducts, pipes, conduit, etc. It is acceptable to attach lightweight items, such as single electrical conduit not exceeding 3/4-inch nominal diameter, to hanger wires.

3. When drilled-in concrete anchors or shot-in anchors are used in reinforced concrete for hanger wires, 1 out of 10 must be field tested for 200 pounds in tension. When drilled-in concrete anchors are used for bracing wires, 1 out of 2 must be field tested for 440 pounds in tension. Shot-in anchors in concrete are not permitted for bracing wires. If any shot-in or drilled-in anchor fails, see CBC, Section 1923A.3.5.

4. Attach ail light fixtures and ceiling mounted air terminals or services, to the ceiling grid runners to resist a horizontal force equal to the weight of the fixtures. Screws or approved fasteners are required.

5. Flush or recessed light fixtures and air terminals or services, weighing less than 56 pounds, may be supported directly on the runners of a heavy duty grid system but, in addition, they must have a minimum of 2 each 12 gauge slack safety wires attached to the fixture at diagonal comers and anchored to the structure above. All 4 feet by 4 feet fixtures shall have slack safety wires at each comer.

a. All flush or recessed light fixtures and air terminals or services weighing 56 pounds or more must be independently supported by not less than 4 taut 12 gauge wires each attached to the fixture and to the structure above regardless of the type of ceiling grid system used.

b. The 4 taut 12 gauge wires, including their attachment to the structure above, must be capable of supporting 4 times the weight of the unit.

6. All fixtures and air terminals or services supported on intermediate duty grid systems must be independently supported by not less than 4 taut 12 gauge wires each attached to the fixture or terminal, and to the structure above.

7. Support surface mounted light fixtures by at least 2 positive devices which surround the ceiling runner and which are each supported from the structure above by a 12 gauge wire. Spring clips or clamps that connect only to the runner are not acceptable.

a. Provide additional supports when light fixtures are 8 feet or longer.

8. Support pendant mounted light fixtures directly from the structure above with hanger wires or cables passing through each pendant hanger and capable of supporting 4 times the weight of the fixture. A bracing assembly is required where the pendant hanger penetrates to the ceiling. Special details are required to attach the pendant hanger to the bracing assembly to transmit horizontal forces.

9. Level grid assembly in each area after installation of mechanical and electrical equipment within 1/8-inch in 12 inches or conforming to slope as appropriate to area of installation.

C. Perimeter Trim Members

1. Install at intersections with perpendicular surfaces as shown.

2. Lap joints where trim pieces meet at wall angles. Do not bend trim around

corners.

3.3 FIELD QUALITY CONTROL

A. Acoustical Ceiling Connection Devices; Test devices for capability to support the following loads:

1. Hanger Wires: 200 pounds in accordance with requirements of CBC.

2. Lateral Force Bracing Wires: 440 pounds.

3.4 CLEAN UP AND ADJUSTING

A. Remove damaged or soiled material and replace with new prior to the Owner's acceptance of Project.

3.5 PROTECTION

A. Protect acoustical treatment installation from damage during remainder of construction.

END OF SECTION

SECTION 096500 – RESILIENT FLOORING

1.0 GENERAL

1.1 SUMMARY

A. This Section includes all labor, materials, equipment, operations, or methods listed, mentioned or scheduled on the plans and/or herein specified, including all incidentals necessary and required for completion of work under this Section.

B. Provide and install resilient polyester composition floor tile, underlayment and all accessories where shown on Drawings and as specified herein.

1.2 RELATED SECTIONS

A. Documents affecting work of this Section include, but are not necessarily limited to, General Conditions, Special Conditions and Division 1 of these Contract Documents.

B. Section 033000 - Cast-In-Place Concrete: Provision of cast-in-place concrete.

C. Section 062000 - Finish Carpentry

D. Section 07900 - Sealants and Caulking: Provision of caulks and sealants.

E. Section 092900 - Gypsum Board: Provision of gypsum board wall surface.

1.3 REFERENCES

A. ASTM - American Society for Testing and Materials

1. ASTM E 648 Standard Test Method for Critical Radiant Flux of Floor-Covering Systems Using a Radiant Heat Energy Source

2. ASTM E 662 Standard Test Method for Specific Optical Density of Smoke Generated by Solid Materials

3. ASTM F 710 Standard Practice for Preparing Concrete Floors to Receive Resilient Flooring

4. F 1482, Standard Guide to Wood Underlayment Products Available for Use Under Resilient Flooring

5. ASTM F 1861 Standard Specification for Resilient Wall Base

6. ASTM F 1869 Standard Test Method for Measuring Vapor Emission Rate of Concrete Subfloor Using Anhydrous Calcium Chloride

7. ASTM F 2170 Standard Test Method for Determining Relative Humidity in Concrete Floor Slabs Using in situ Probes

8. ASTM F 2982 Standard Specification for Polyester Composition Floor Tile

B. NFPA – National Fire Protection Association

1. NFPA 253 Standard Method of Test for Critical Radiant Flux of Floor Covering Systems Using a Radiant Heat Energy Source

2. NFPA 258 Standard Test Method for Measuring the Smoke Generated by Solid Materials

1.4 SUBMITTALS

A. Product Data: Submit manufacturer's product data for each type of product specified.

B. Samples: Submit samples for initial selection purposes in form of manufacturer's color charts consisting of actual tiles or sections of tiles and bases showing full range of colors and patterns available for each different product indicated. Include interior and exterior premolded comer samples.

C. Quality Control Submittals

1. Certificates: Submit certification by resilient tile manufacturer that products supplied for tile installation comply with local regulations controlling use of volatile organic compounds (VOC's).

2. Installer certificates signed by floor covering manufacturer certifying that Installers comply with requirements specified under "Quality Assurance" article.

D. Contract Closeout Submittals

1. Operation and Maintenance: Submit maintenance data for resilient floor tile.

1.5 DELIVERY, STORAGE, AND HANDLING

A. Acceptance at Site: Deliver tiles and installation accessories to Project site in original manufacturer's unopened cartons and containers each bearing names of

product and manufacturer, Project identification, and shipping and handling instructions.

B. Storage and Protection

1. Store flooring materials in dry spaces protected from the weather with ambient temperatures maintained between 50 degrees F and 90 degrees Fahrenheit.

2. Store tiles on flat surfaces. Move tiles and installation accessories into spaces where they will be installed at least 48 hours in advance of installation.

1.6 PROJECT CONDITIONS

A. Environmental Requirements

1. Maintain a minimum temperature of 70 degrees Fahrenheit in spaces to receive resilient flooring materials for at least 48 hours prior to installation, during installation, and for not less than 48 hours after installation. After this period, maintain a temperature of not less than 55 degrees Fahrenheit.

2. Do not install resilient flooring materials until they are at the same temperature as the space where they are to be installed.

3. Close spaces to traffic during resilient flooring materials installation.

1.7 SEQUENCING AND SCHEDULING

A. Install resilient flooring materials and accessories after other finishing operations, including painting, have been completed.

B. Sequence installing products specified in this Section with other construction to minimize possibility of damage and soiling during remainder of construction period.

C. Do not install resilient flooring materials over concrete slabs until the slabs have cured and are sufficiently dry to bond with adhesive as determined by tile manufacturer’s recommended bond and moisture tests.

1.8 MAINTENANCE

A. Extra Materials: Deliver extra materials to the Owner. Furnish extra materials matching products installed as described below, packaged with protective

covering for storage and identified with labels clearly describing contents.

1. Furnish 1 box of each class, wearing surface, color, pattern and size of resilient floor tile installed.

2. Furnish 10 percent of linear feet in roll form of each different composition, wearing surface, color, and pattern of linoleum floor covering, and resilient wall base installed.

2.0 PRODUCTS

2.1 MANUFACTURERS

A. Acceptable Manufacturers

1. Resilient Tile: Armstrong, or approved equal.

4. Underlayment: Ardex, or approved equal.

2.2 RESILIENT TILE

A. Polyester Composition Floor Tile: Products complying with ASTM F 2982 Standard Specification for Polyester Composition Floor Tile.

1. Series: Migrations BBT Bio-Flooring

2. Wearing Surface: Smooth.

3. Thickness: 1/8-inch.

4. Size: 12 inches by 12 inches.

5. Color and Pattern: See schedule

2.3 INSTALLATION ACCESSORIES

A. Concrete Slab Primer: Nonstaining type as recommended by flooring manufacturer.

B. Trowelable Underlayments and Patching Compounds: Latex modified, Portland cement based formulation provided or approved by resilient flooring manufacturer for applications indicated.

C. Adhesives (Cements); Waterproof type recommended by tile manufacturer to suit resilient floor tile products and substrate conditions indicated. Adhesives shall be

compatible with vapor emission treatment systems specified in Section 099725.

D. Caulking: Acrylic latex silicon caulk as specified in Section 079200. E. Waterproof Adhesive; As manufactured by Master Builders, “Concresive Paste LPL”, or equal.

2.4 UNDERLAYMENT

A. Portland cement based, latex modified, feather edge, trowelable material. Add pea gravel in 1:1 by volume as required. Product: Ardex, “SD-F Featheredge Finish”, or approved equal.

2.5 SCHEDULE

Reference #	**Series**	**Color**	**Pattern**
BBT-1	Armstrong Migrations BBT Bio-Flooring	T3506 Glacier Gray	Monolithic
-	-	-	-
-	-	-	-
-	-	-	-
Note: Verify location, type and size with drawings			

3.0 EXECUTION

3.1 EXAMINATION

A. General: Examine areas where installation of products specified in this Section will occur, with installer present, to verify that substrates and conditions are satisfactory for tile installation and comply with manufacturer's requirements and those specified in this Section.

B. Concrete Subfloors: Verify that concrete slabs comply with ASTM F710 and the following:

1. Slab substrates are dry and free of curing compounds, sealers, hardeners and other materials whose presence would interfere with bonding of adhesive. Determine adhesion and dryness characteristics by performing bond and moisture tests recommended by tile manufacturer.

2. Subfloors are free of cracks, ridges, depressions, scale and foreign deposits of any kind.

3.2 PREPARATION

A. General: Comply with manufacturers' installation specifications to prepare substrates indicated to receive resilient flooring accessories.

B. Use trowelable leveling and patching compounds per manufacturer's directions to fill cracks, holes and depressions in substrates.

C. Remove coatings, including curing compounds, and other substances that are incompatible with flooring adhesives and that contain soap, wax, oil or silicone, by using a terrazzo or concrete grinder, a drum sander, or a polishing machine equipped with a heavy-duty wire brush.

D. Broom or vacuum clean substrates to be covered by tiles immediately before flooring installation. Following cleaning, examine substrates for moisture, alkaline salts, carbonation or dust.

E. The General Contractor shall be responsible for acceptability of moisture emission of concrete.

1. Before installing resilient flooring, concrete slab shall be tested as specified in Section 099725 for moisture emission. The test shall be conducted around the perimeter of each room, at columns and where moisture may be evident. A diagram of the areas showing the locations and results of each calcium chloride test shall be submitted to the Architect. At each area where the moisture emission exceeds 3.5 pounds per 1,000 square feet per 24 hours, a sealant shall be applied as specified in Section 099725.

F. Apply concrete slab primer, if recommended by flooring manufacturer, prior to applying adhesive. Apply according to manufacturer's directions.

3.3 INSTALLATION

A. General: Comply with manufacturers' installation directions and other requirements indicated that are applicable to each type of installation included in Project.

1. Apply waterproof adhesive in accordance with manufacturer's instructions.

3.4 RESILIENT TILE INSTALLATION

A. Lay out tiles from center marks established with principal walls, discounting minor offsets, so tiles at opposite edges of room are of equal width. Adjust as necessary to avoid using cut widths at perimeter that equal less than one-half of a

tile. Install tiles square with room axis, unless otherwise indicated.

B. Match tiles for color and pattern by selecting tiles from cartons in same sequence as manufactured and packaged, if so numbered. Cut tiles neatly around all fixtures. Discard broken, cracked, chipped, or deformed tiles.

1. Lay tiles as indicated.

2. Where no pattern is indicated, lay tile in checker board pattern with grain in alternate directions.

C. Where cabinets and other items are indicated for installing on top of finished tile floor, install tile before these items are installed.

D. Scribe, cut, and fit tiles to butt tightly to vertical surfaces, permanent fixtures, built- in furniture including, pipes, outlets, edgings, thresholds and nosings.

E. Extend tiles into toe spaces, door reveals, closets, and similar openings.

F. Maintain reference markers, holes, or openings that are in place or plainly marked for future cutting by repeating on finish flooring as marked on subfloor. Use chalk or other nonpermanent marking device.

G. Adhere tiles to flooring substrates without producing open cracks, voids, raising and puckering at joints, telegraphing of adhesive spreader marks, or other surface imperfections in completed tile installation.

H. Use full spread of adhesive applied to substrate in compliance with tile manufacturer’s directions including those for trowel notching, adhesive mixing, and adhesive open and working times.

I. Hand roll tiles where required by tile manufacturer.

3.5 CLEAN UP AND PROTECTION

A. Perform the following operations immediately after completing installation:

1. Remove visible adhesive and other surface blemishes using cleaner recommended by manufacturers.

2. Sweep or vacuum floor thoroughly.

3. Do not wash floor until after time period recommended by manufacturer.

4. Damp-mop resilient flooring and accessories to remove black marks and soil.

B. Protect flooring against mars, marks, indentations, and other damage from construction operations and placement of equipment and fixtures during remainder of construction period. Use protection methods indicated or recommended by tile manufacturer.

1. Apply protective floor polish to tile surfaces that are free from soil, visible adhesive, and surface blemishes.

a. Use commercially available, metal, cross-linked acrylic product acceptable to tile manufacturer.

b. Coordinate selection of floor polish with Owner's maintenance service.

2. Cover tiles with undyed, untreated building paper until inspection for Substantial Completion.

3. Do not move heavy and sharp objects directly over flooring materials. Place plywood or hardboard panels over flooring and under objects while they are being moved. Slide or roll objects over panels without moving panels.

C. Clean products specified in this Section not more than 4 days prior to dates scheduled for inspections intended to establish date of Substantial Completion in each area of Project. Clean products using method recommended by manufacturer.

1. Strip protective floor polish that was applied after completing installation prior to cleaning.

2. Reapply floor polish after cleaning.

END OF SECTION

SECTION 096800 – CARPET TILE

1.0 GENERAL

1.1 SUMMARY

A. This Section includes all labor, materials, equipment, operations, or methods listed, mentioned, or scheduled on the plans and/or herein specified, including all incidentals necessary and required for completion of work under this Section.

B. Provide and install carpet and all accessories where shown on Drawings and as specified herein.

1.2 RELATED SECTIONS

A. Documents affecting work of this Section include, but are not necessarily limited to, General Conditions, Special Conditions and Division 1 of these Contract Documents.

B. Division 9 - Finishes

1.3 REFERENCES

A. American Society for Testing and Materials (ASTM):

1. ASTM C1028 - Standard Test Method for Determining the Static Coefficient of Friction of Ceramic Tile and Other Like Surfaces by the Horizontal Dynamometer Pull-Meter Method

2. ASTM D1667-Standard Specification for Flexible Cellular Materials-Vinyl Chloride Polymers and Copolymers (Closed-Cell Foam).

3. ASTM D2859 - Standard Test Method for Ignition Characteristics of Finished Textile Floor Covering Materials.

4. ASTM D5116 - Standard Guide for Small-Scale Environmental Chamber Determinations of Organic Emissions From Indoor Materials/Products

5. ASTM D5417 - Standard Practice for Operation of the Vettermann Drum Tester

6. ASTM E84 - Standard Test Method for Surface Burning Characteristics of Building Material.

7. ASTM E648 - Standard Test Method for Critical Radiant Flux of Floor-Covering Systems Using a Radiant Heat Energy Source

8. ASTM E662 -Standard Test Method for Specific Optical Density of Smoke Generated by Solid Materials

9. ASTM F1861 - Standard Specification for Resilient Wall Base

B. American Association of Textile Chemists and Colorists (AATCC):

1. AATCC 20 - Fiber Analysis: Qualitative

2. AATCC 134 - Electrostatic Propensity of Carpets

C. Carpet and Rug Instute (CRI):

1. CRI TM 102 - Florochemical Finishes

D. National Fire Protection Association (NFPA):

1. NFPA 253 - Standard Method of Test for Critical Radiant Flux of Floor Covering Systems Using a Radiant Heat Energy Source

1.4 SUBMITTALS

A. Comply with provisions of Section 013300, Submittal Procedures.

B. Shop Drawings: Showing the extent of carpet, seam direction of carpet, location of molding and edge strips, and accessories shall be submitted to Architect for approval prior to installation. Check pattern match, if any, for matching during installation and possible waste factors in ordering required amounts. Indicate columns, doorways, enclosing walls or partitions, built-in cabinets, and locations where cutouts are required in carpet. Copy of approved shop drawings to be

available on job site during installation.

1.5 DELIVERY, STORAGE, & HANDLING

A. Accept delivery of materials to the site in manufacturer's original packaging listing manufacturer's name, product name, identification number, and related information.

B. Store in a dry location, between 60 degrees F and 80 degrees F and a relative humidity below 65%. Protect from damage and soiling.

C. Make stored materials available for inspection by the Owner's representative.

D. Store materials in area of installation for minimum period of 48 hours prior to installation.

1.6 QUALITY ASSURANCE

A. Installer Qualifications:

1. Flooring contractor must be certified by the carpet manufacturer prior to bid.

2. Flooring contractor to be a specialty contractor normally engaged in this type of work and shall have prior experience in the installation of these types of materials of a minimum of 5 years.

3. Certify payment of Prevailing Wage Rates to the installers.

4. Flooring contractor possessing Contract for the carpet installation shall not sub-contract the labor without written approval of the Project Manager.

5. Flooring contractor will be responsible for proper product installation, including floor testing and preparation, as specified by the carpet manufacturer and Part 1.6, Project Conditions herein.

6. Flooring contractor to provide the Owner with a written installation warranty that guarantees the completed installation to be free from defects in materials and workmanship for a period of one year after job completion.

1.7 PROJECT CONDITIONS

A. Sub-floor preparation is to include all required work to prepare the existing floor for installation of the product as specified in this Section and manufacturer's installation instructions.

B. The maximum amount of moisture evacuation from the floor is 3.0 pounds per 1,000 square feet in 24 hours. The acceptable pH level of the substrate is between 7.0 and 9.0. Flooring contractor is responsible for floor testing.

C. All material used in sub-floor preparation and repair shall be recommended by the carpet manufacturer and shall be chemically and physically compatible with the carpet system being bid.

D. Maintain minimum 65 degrees F ambient temperature and 65% Relative Humidity for 72 hours prior to, during, and 48 hours after installation.

E. Do not install carpet until space is enclosed and weatherproof, wet-work in space is completed and nominally dry, work above ceilings is complete, and ambient temperature and humidity conditions are and will be continuously maintained at values near those indicated for final occupancy.

1.8 EXCESS MATERIALS

A. Provide additional 5% of each type, color, and pattern furnished;

1.9 CARPET WARRANTY

A. Warranty to be sole source responsibility of the Manufacturer. Second source warranties and warranties that involve parties other than the carpet manufacturer are unacceptable.

B. If the product fails to perform as warranted when properly installed and maintained, the affected area will be repaired or replaced at the discretion of the Manufacturer.

C. Chair Pads are not required for carpet warranty coverage.

D. Warranty shall not exclude carpet product installed on stairs provided it is properly installed and maintained.

E. Warranty shall be for a specifically defined non-prorated period of twenty years. "Lifetime" warranties are not acceptable.

F. The non-prorated twenty-year warranty shall cover against and specifically define the following:

1. Excessive Surface Wear: More than 15% loss of pile fiber weight

2. Excessive Static Electricity: Warrant that carpet will give protection from static discharges in excess of 3.0 kV when tested under the Standard Shuffle Test method (at 70 degrees F and 20% R. H.) during Life of Carpet. (per AATCC 134)

3. Resiliency Loss of the Backing: More than 10% loss of backing resiliency

4. Backing Delamination: Warrant that secondary backing of carpet will not delaminate during Life of Carpet.

5. Edge Ravel: Warrant that under normal use, carpet will not edge ravel at seams or edges during Life of Carpet.

6. Zippering.

7. Tuft Bind warranty in lieu of edge ravel and zippering is not acceptable. Warrant that carpet will have average face yarn tuft bind of twenty pounds STM D-1-335-67 method. This portion of warranty must protect against insufficient tuft bind, whether the carpet is dry or wet (as it might be during steam cleaning, hot water extraction, or as a result of a broken pipe or flood).

8. Adhesive: Carpet manufacturer shall fully guarantee substrate and adhesive performance for the Life of Carpet installation, provided adhesive is made by Carpet manufacturer. Use of Third party warranties are not acceptable. Use of an adhesive that has not been approved by Carpet manufacturer will void warranty.

9. Stain Resistance: 10 year Lightfastness and Atmospheric Contaminant Warranty, refer to Part 2.3Di of this Section.

2.0 PRODUCTS

2.1 MANUFACTURERS

A. Shaw Contract; www.shawncontract.com

2.2 MATERIALS

A. Carpet Tile: Modular tiles with recycled or reprocessed re-used materials.

1. Construction: Patterned Loop.

2. Pile Units per Inch: 9.8.

3. Pile Height Average (ASTM D418, Section 12): 0.187-inch

4. Static Control: Less than 3.5 KV at 70 degrees F and 20 percent RH.

5. Radiant Panel/Flammability: Class 1/Methenamine Pill Test

6. Smoke Density: Per ASTM E 662 <450.

7. Warranties: Minimum of non-prorated, 15 year warranty covering material and labor against edge ravel, backing delamination, wet or dry, static protection, face yam loss no more than 10 percent or 20 lb. tuft bind.

8. Odor Emissions: Meet CRI Green Label standards.

9. Warranty: Lifetime, commercial limited warranty

10. Carpet shall economically maximize the following appearance retention characteristics:

a. Minimize crushing and matting.

b. Manage dry soil concerns and ease of maintenance.

c. Manage staining.

d. Eliminate seam failure and unravelling.

e. Eliminate moisture exposure concerns.

f. Minimize loss of coloration and fading.

B. Carpet Types:

1. Carpet Tile CT-1, CT-2, CT-3 & CT-4: Contactor provided and installed.

a. Manufacturer: Shaw Contract

b. Series/Color/Pattern: See Schedule

c. Gauge: 1/10

d. Stitches per inch: 13.0

e. Size: See Schedule

f. Fiber System: Solutia Ultron SD Nylon

g. Dye method: Solution dyed

h. Stain/Soil Protection: S.S.P. Shaw Soil Protection

C. Adhesive System: Manufacturer's microencapsulated tackifier applied to 94 percent of backing during manufacturing. Adhesive system shall be compatible with vapor emission treatment system specified in Section 018119.

2.3 ACCESSORIES

A. Carpet Edge Guard: Aluminum with fold-down edge and concealed gripper teeth; minimum 1-1/2 inch wide punched anchorage flange; minimum 5/8-inch wide

fold flange. Anodized aluminum finish, manufacturer's standard colors.

1. Finish: Hammered texture.

B. Seaming Cement Hot-melt adhesive tape or similar product recommended by carpet manufacturer for taping seams and butting cut edges at backing to form secure seams and to prevent pile loss at seams.

C. Adhesives: As recommended by carpet manufacturer, or if acceptable to manufacturer use low pressure sensitive, releasable low VOC water based adhesive, as manufactured by W. F. Taylor - Envirotech, “Healthguard", (800) 397- 4583, or approved equal. Adhesives shall be compatible with vapor emission treatment systems specified in Section 018119.

2.4 CARPET SCHEDULE

CARPET TILES				
Reference #	**Series**	**Size**	**Color**	**Pattern**
CT-1	View Collection Realm Tile 5T078	24” x 24”	Distance 78597	Non Directional
CT-2	View Collection Realm Tile 5T078	24” x 24”	Dwell 78326	Non Directional
CT-3	View Collection Realm Tile 5T078	24” x 24”	Overlook 78436	Non Directional
CT-4	View Collection Realm Tile 5T078	24” x 24”	Landscape 78675	Non Directional
Note: Verify location, type and size with drawings				

3.0 EXECUTION

3.1 EXAMINATION/PREPARATION

A. Prepare sub-floor to comply with criteria established in Manufacturer's installation instructions. Use only preparation materials that are acceptable to the Manufacturer.

B. Do not scale the Architect’s drawings or calculate sizes from dimensions shown. Measure each space to receive carpeting as a basis of supplying, cutting, and seaming the carpet

C. Meet with General Contractor several days prior to installation. Discuss various areas of responsibility so that installation and acceptance of floor will be a smooth transition between trades, preventing costly down-time. Discuss these subjects:

1. Remove all deleterious substances from substrate(s) that would interfere with or be harmful to the installation. (i.e., floor wax)

2. Remove sub-floor ridges and bumps. Fill cracks, joints, holes, and other defects.

3. Verify that sub-floor is smooth and flat within specified tolerances and ready to receive carpet.

4. Verify that substrate surface is dust-free and free of substances that would impair bonding of product to the floor.

5. Verify that concrete surfaces are ready for installation by conducting moisture and pH testing. Results must be within limits recommended by Manufacturer. Moisture Test requires the following:

   a. A concrete nail must be driven into floor surface no more than 1/2".

   b. Remove nail and place small amount of anhydrous calcium chloride or calcium sulfate crystals over hole.

   c. Cover crystals and the hole with a piece of flat glass and seal edges with waterproof tape or putty. As concrete pourings vary, repeat this test every 1,500 square feet. (139.35 M2) Leave glass plate in place for 72 hours.

   d. Any color change in crystals indicates the presence of moisture and must be reported to General Contractor.

   e. An electronic moisture meter may be used to measure moisture. The percent total moisture should not exceed 4-5%.

6. Verify floor temperature. Temperature should remain at 65 degrees F for

24 hours before and 40 hours after the installation. Take temperature readings from thermometer placed on the floor. Repeat in scattered areas.

7. Verify that a carpet installer will return 5 days after installation to monitor and remove any carpet buckles that may occur.

8. Verify porosity of floor. Pour a cup of water on floor, repeat in scattered areas. If water breaks into beads or remains on surface, floor is relatively non-absorbent and adhesive will dry at its normal rate. If water is absorbed rapidly, the floor is very porous and adhesive will dry too quickly. In the event of very porous floor, damp mopping prior to spreading adhesive will slow down absorption rate of floor.

9. There will be no exceptions to the provisions stated in the Manufacturer's installation instructions.

3.2 INSTALLATION – GENERAL

A. Install product in accordance with manufacturer's installation instructions.

B. Pallet and Box Sequencing - It is very important to install carpet tiles in the order they were manufactured. This is easily accomplished by selecting pallets in sequential order and following the numbers located on each carton of tiles to ensure the most uniform look. Typically, an installation will begin with the lowest carton numbers and progress through the highest numbers until the project is complete.

C. Adhesive Application

1. The adhesive must be applied in a FULL SPREAD – NOT grid.

2. The spread rate for roll on application is 35 to 40 yards per gallon when using a 3/4” nap roller. Ensure the proper application amount of adhesive to the subfloor. Prior to installation, mark off a small area of the subfloor and determine the adhesive spread rate. This will allow you to determine the proper coverage level and amount of pressure to apply to the roller during installation.

3. On smooth surfaces, be careful not to apply too little adhesive. Just

because a surface is smooth and/or sealed, it still requires a proper coating of adhesive.

4. Allow the adhesive to dry to a clear and tacky state. Tiles must be installed immediately after adhesive has dried. To determined if the adhesive is dry, press finger into adhesive. When dry, adhesive must not transfer to finger.

IMPORTANT: Set-up time is approximately 45 to 90 minutes depending on the climate. & humidity. Use of blower fans will speed drying time.

5. Roll Floor with 75 to 100 pound Roller

C. Install carpet tight and flat on sub-floor, with a uniform appearance.

D. Recommended Adhesives:

1. Manufacturer recommended pressure sensitive adhesive. Coverage will depend on type of substrate and trowel size. Installer is responsible for determining exact spread rate, however, in most conditions a spread rate of 10-12 square yards per gallon is required.

3.4 CLEAN UP & PROTECTION

A. Remove all debris resulting from installation, including removal of excess adhesive and/or seam sealer from floor and wall surfaces without incurring damage.

B. All rubbish, wrappings, debris, trimmings, etc., to be removed from site and disposed of properly.

C. Clean and vacuum carpet surfaces using a beater brush/bar commercial vacuum. Remove spots with dry cleaning method (not steam) and leave areas ready for use. After each area of carpet is installed, protect from soiling and damage by other trades.

END OF SECTION

SECTION 096810 – RUBBER BASE

1.0 GENERAL

1.1 SUMMARY

A. This Section includes all labor, materials, equipment, operations, or methods listed, mentioned, or scheduled on the plans and/or herein specified, including all incidentals necessary and required for completion of work under this Section.

B. Provide and install base and accessories where shown on Drawings and as specified herein.

1.2 RELATED SECTIONS

A. Documents affecting work of this Section include, but are not necessarily limited to, General Conditions, Special Conditions and Division 1 of these Contract Documents.

B. Division 9 – Finishes

1.3 REFERENCES

A. American Society for Testing and Materials (ASTM)

1. ASTM D5116 - Standard Guide for Small-Scale Environmental Chamber Determinations of Organic Emissions From Indoor Materials/Products

2. ASTM D5417 - Standard Practice for Operation of the Vettermann Drum Tester

3. ASTM E84 - Standard Test Method for Surface Burning Characteristics of Building Material.

4. ASTM E662 -Standard Test Method for Specific Optical Density of Smoke Generated by Solid Materials

5. ASTM F1861 - Standard Specification for Resilient Wall Base

6. ASTM D 2240 - 85 Shore A

1.4 SUBMITTALS

A. Comply with provisions of Section 013300, Submittal Procedures.

B. Shop Drawings: Showing the location of molding and edge strips, and accessories shall be submitted to Architect for approval prior to installation. Copy of approved shop drawings to be available on job site during installation.

C. Product Data: Provide data on specified products, describing physical and performance characteristics, sizes, patterns, and method of installation.

D. Manufacturer's Installation Instructions: Indicate special procedures and perimeter conditions requiring special attention.

E. Maintenance Data: Include maintenance procedures manual, recommendations for maintenance materials and equipment, and suggested schedule for cleaning.

F. Certifications: Manufacturer to submit copies of the following independent laboratory reports showing compliance with requirements per these methods outlined in Part 2 of this Section. Submitted results shall represent average results for production goods of the specified style.

1 ASTM E648: Critical Radiant Flux- Class 1

2. ASTM E662: Smoke Density

3. ASTM D3936: Delamination

4. Other from methods specified in Part 2

1.5 DELIVERY, STORAGE, & HANDLING

A. Deliver materials to the site in manufacturer's original packaging listing manufacturer's name, product name, identification number, and related information.

B. Store in a dry location, between 60 degrees F and 80 degrees F and a relative humidity below 65%. Protect from damage and soiling.

C. Make stored materials available for inspection by the Owner’s representative.

D. Store materials in area of installation for minimum period of 48 hours prior to installation.

1.6 PROJECT CONDITIONS

A. Maintain minimum 65 degrees F ambient temperature and 65% Relative Humidity for 72 hours prior to, during, and 48 hours after installation.

B. Do not install base until space is enclosed and weatherproof, wet-work in space is

completed and nominally dry, work above ceilings is complete and ambient temperature and humidity conditions are and will be continuously maintained at values near those indicated for final occupancy.

1.7 EXCESS MATERIALS

A. Provide additional 5% of each type, color, and pattern furnished; product to be rolled and bound. Coordinate storage location with the Owner.

B. Deliver all unused base and large scraps to the Owner for "attic stock." Dispose of scraps less than 8" in length.

2.0 PRODUCTS

2.1 MANUFACTURERS

A. Base: Burke Flooring Products, 2250 S. 10th St., San Jose, CA 95112, 1-800-447-8442. www.burkeflooring.com

2.2 MATERIALS

A. Rubber Wall Base:

1. 1/8" Molded Rubber Wall base Type TS.

2. Type & Thickness: 1/8" coved base

a. Height: 4"

b. Length: 4 feet

c. Vulcanized thermoset rubber; 1/8 inch thick, satin finish.

d. Color: See Schedule

e. Substrate adhesives pursuant to manufacturer’s recommendations.

f. Conformance:

1) ASTM F1861-98, Type TS, Group 1, Styles A & B.

2) FS SS-W-40a, Type I, Styles A & B.

3) ASTM E84 > Class B rating with smoke density of 150-200.

B. Accessories:

1. Materials recommended by manufacturer(s) for patching, priming, chemically welding the seams, etc.

2. Adhesives: Products to be supplied with a pre-cured, mill-applied or other "dry" adhesive system when available. Otherwise, adhesive should be full spread, extremely low VOC in compliance with CRI Indoor Air Quality Adhesive Testing Program requirements, compatible with materials being adhered, as recommended by the Manufacturer.

3. Base and Transition Strips: As specified in applicable Sections.

2.3 SCHEDULE

Reference #	**Series**	**Color**
RB-1	Burke TS	TBD
Note: Verify location, type and size with drawings		

3.0 EXECUTION

3.1 EXAMINATION/PREPARATION

A. Do not scale the Architect’s drawings or calculate sizes from dimensions shown. Measure each space to receive base as a basis of supplying and cutting.

B. Meet with General Contractor several days prior to installation. Discuss various areas of responsibility so that installation and acceptance of base will be a smooth transition between trades, preventing costly down-time. Discuss these subjects:

1. Remove all deleterious substances from substrate(s) that would interfere with or be harmful to the installation. (i.e., floor wax)

2. Fill cracks, joints, holes, and other defects.

3. Verify that substrate surface is dust-free and free of substances that would impair bonding of product.

4. There will be no exceptions to the provisions stated in the Manufacturer's installation instructions.

3.2 INSTALLATION – GENERAL

A. Install product in accordance with manufacturer's installation instructions.

B. Keep materials and adhesives at 65˚-80˚F for 24 hours before, during, and after installation. Surface to receive Burke Base must be clean, dry and free of any foreign substances.

C. NOTE: For base installations on any non-porous surfaces, a co-adhesive method of installation applied to both surfaces with contact bond adhesive should be used. Vinyl wall covering must be cut up to the height of wall base or just below top of base for proper base installation.

D. Wall areas to receive the base must be completely clean, dry, smooth, and free of oil, grease, rust, paint, varnish, shellac, or any other foreign substances. Cracks, holes, or major wall imperfections should be filled with latex underlayment.

E. All coiled wall base shall be unrolled and allowed to lay flat for a period of at least 24 hours at 65°F prior to installation. Resilient wall base shall be rolled, with a J-hand roller, after installation, to ensure proper bonding.

F. On dry, porous, absorbent surfaces, the base should be cemented with Burke BR-101, adhesive and firmly pressed to the walls.

G. After the Installation:

1. Remove all excess adhesive before it dries. Use cloth dampened with water.

2. Allow adhesive to set firm for approximately 24 hours before washing or applying any pressure.

3.3 CLEANING & PROTECTION

A. Remove all debris resulting from installation, including removal of excess adhesive from floor and wall surfaces without incurring damage.

B. All rubbish, wrappings, debris, trimmings, etc., to be removed from site and disposed of properly.

C. Clean surfaces and leave areas ready for use. After each area is installed, protect from soiling and damage by other trades.

END OF SECTION

SECTION 097700 – SPECIAL WALL SURFACING

1.0 GENERAL

1.1 SUMMARY

A. This Section includes all labor, materials, equipment, operations, or methods listed, mentioned or scheduled on plans and/or herein specified, including all incidentals necessary and required for completion of work under this Section.

1. Shop fabricated plastic laminated wood wall panels.

1.2 RELATED SECTIONS

A. Documents affecting work of this Section include, but are not necessarily limited to, General Conditions, Special Conditions and Division 1 of these Contract Documents.

B. Section 055000 - Metal Fabrications

C. Section 064100 - Architectural Wood Casework

D. Section 066116 - Solid Surfacing Fabrications.

E. Section 081100 - Metal Doors and Frames

F. Section 081423 - Clad Wood Doors

G. Section 092900 - Gypsum Board

H. Division 26 - Electrical

1.3 REFERENCES

A. ANSI - American National Standards Institute

B. NEMA - National Electric Manufacturers Association

1. LD3 - High Pressure Decorative Laminates.

C. U. S. Department of Commerce, National Institute of Standards and Technology

1. PS 1 - U. S. Product Standard for Construction and Industrial Plywood.

2. PS 20 - U. S. Product Standard for American Softwood Lumber Standard.

D. WI - Woodwork Institute

1. QS - Quality Standards.

1.4 SUBMITTALS

A. Product Data: Submit for all items.

B. Shop Drawings

1. Indicate dimensioned plans, sections, elevations, large scale details, location of each item, materials and wood species, component profiles, fastenings, jointing details, finishes, accessories, hardware location and schedule of finishes.

2. Follow WI standards for millwork shop drawings.

3. Coordinate scribes and fillers where Owner furnished appliances and equipment are installed in casework and counters.

C. Samples

1. Wood Items: Submit samples finished as specified.

a. Factory Finished Panels for plastic laminate finish: 3 veneer samples cut from selected flitch samples, laminated to panel product finished to match the Architect's samples, 12 inches by 12 inches each.

b. At least 1 sample of finished solid stock showing complete range of variations in grain, color, and other features, minimum 6 inches width by 18 inches.

c. Samples shall be resubmitted for acceptable finish until approved by the Architect.

3. Plastic Laminate: 12 inches by 12 inches, each color and pattern.

4. Sample of each type of hardware proposed for use.

D. Certification: See Article 1.04, "Quality Assurance" for requirements.

1.5 QUALITY ASSURANCE

A. Qualifications

1. Manufacturer. Company specializing in manufacturing the products specified in this Section with minimum 5 years of experience.

B. Furnish and install panel work in accordance with the standards and details of premium grade according to the “Manual of Millwork", WI.

C. First-class quality of panels shall be established by use of proper machinery, tools, jigs, hardware and skilled workmanship. Fabricate veneer panels on stainless steel or chrome equipment Rust stains on panels will be cause for rejection.

1.6 DELIVERY, STORAGE, AND HANDLING

A. Acceptance at Site

1. Deliver, store and handle products to site under provisions of Division 1.

2. Deliver finish carpentry items to job site only after proper facilities are available for handling, sorting and protecting items; receiving areas are broom cleaned; and all plaster work is dry, mechanical and electrical rough-ins are completed.

1.7 PROJECT CONDITIONS

A. Field Measurements: Verify field measurements.

1.8 COORDINATION

A. Coordinate the work with plumbing and electrical rough-in.

2.0 PRODUCTS

2.1 MANUFACTURERS

A. Plywood Panels: SierraPine, 3010 Lava Ridge Court, Suite 220, Roseville, CA 95661, 1-916-772-3422, www.sierrapine.com, or approved equal.

B. Laminated Plastic:

1. Wilsonart International, 2400 Wilson Place, Temple, TX, 76503, 1-800-433-3222, www.wilsonart.com.

2.2 PLASTIC LAMINATED WALL PANELS

A. Fabricate wall panels in compliance with WI Section 15 plastic covered casework. Custom grade.

1. ¾” Pro-Core MDF

B. Plastic Laminate

1. High pressure plastic laminate in accordance with NEMA LD-1 standards unless otherwise indicated.

b. Exposed exterior surfaces shall be 0.030-inch minimum thickness high pressure plastic laminate.

c. Color: See schedule

C. General Construction

1. Provide cutouts for plumbing fixtures, inserts, appliances, outlet boxes and other fittings. Verify location of cutouts from on-site dimensions.

F. Fasteners: Size and type to suit application.

G. Hardware: Provide all hardware as shown and required per WI requirements of Supplement #1 of the WI Manual with the following stipulations:

1. Finish: US26D, Satin chrome.

2.3 FABRICATION

A. General

1. Perform corrective measures necessitated by non-conformance with WI standards. The Architect’s opinion shall govern regarding discrepancies.

2. Verify location, detail, and dimensions of electrical receptacles and switches to ensure proper fit and accurate alignment integral with casework and other items.

3. Coordinate details with other work supporting, adjoining, or fastening to panels and other items.

4. Shop fabricate and assemble work in complete units insofar as

dimensions permit for shipment and installation.

5. Wood Moisture Content Comply with requirements of referenced quality standard for moisture content of lumber at time of fabrication and for relative humidity conditions in the installation areas.

6. Fabricate paneling to dimensions, profiles and details indicated with openings pre-cut, where possible, to accommodate other items and work. Complete fabrication, assembly, finishing, and other work before shipment to project site to maximum extent possible. Disassemble components only as necessary for shipment and installation. Where necessary for fitting at site, provide ample allowance for scribing, trimming and fitting.

2.5 SCHEDULE

Wall Panels				
Ref. #	**Room/Location**	**Series**	**Color**	**Grain Orientation**
WC-1	#144 Program Room	Wilsonart Standard Laminate	D403-60 White Sand	None
Note: Verify location, type and size with drawings				

3.0 EXECUTION

3.1 COORDINATION

A. Coordinate with requirements of equipment to be installed in panels.

3.2 PANEL INSTALLATION

A. Install in accordance with WI Section 26, premium grade, except as otherwise shown or specified.

B. Verify dimensions at site.

C. Set and secure panels in place rigid, plumb, square and level.

D. Provide equal fillers where required for complete coverage. Provide closures and back panels as required to finish a complete installation.

E. Permanently fix panels to wall using appropriate anchorages.

F. Scribe panels which are against other building materials, leaving gaps of 1/16- inch maximum. Do not use additional overlay trim for this purpose. Use sealant of an approved color to seal any gaps.

G. Installation shall be by same fabricator as casework.

3.5 FINISHING

A. Grade: WI Premium Grade.

B. All architectural woodwork to be factory finished, field touch-up.

C. Finishing: Seal, sand and finish in accordance with recommendations of finish manufacturer.

3.6 CLEAN UP

A. Clean walls.

END OF SECTION

SECTION 098400 – ACOUSTIC WALL PANELS

1.0 GENERAL

1.1 SUMMARY

A. This Section includes all labor, materials, equipment, operations, or methods listed, mentioned or scheduled on the plans and/or herein specified, including all incidentals necessary and required for completion of work under this Section.

B. Provide and install acoustic wall panels as shown on project Drawings and as specified herein.

1.2 RELATED SECTIONS

A. Documents affecting work of this Section include, but are not necessarily limited to, General Conditions, Special Conditions and Division 1 of these Contract Documents.

B. Section 079000, Sealants and Caulking

C. Section 092900, Gypsum Board

D. Section 099100, Painting

1.3 REFERENCES

A. American Society for Testing and Materials (ASTM):

1. ASTM E84A - Standard Test Method for Surface Burning Characteristics

2. ASTM C423 – Standard Test for Sound Absorption and Sound Absorption Coefficients by the Reverberation Room Method.

1.4 SUBMITTALS

A. Comply with provisions of Section 013300, Submittal Procedures.

B. Product data:

1. Manufacturer's recommended methods of installation.

2. Manufacturer’s MSDS for all adhesives and sealants.

C. Samples: Submit selection and verification samples for each color, pattern and finish required.

1.5 DELIVERY, STORAGE AND HANDLING

A. Storage and Protection: Store materials protected from exposure to harmful weather conditions, at temperature and humidity conditions recommended by manufacturer.

1.6 QUALITY ASSURANCE

A. Qualification of Fabricators and Installers:

1. Fabricator Qualifications: Minimum of three years documented experience in fabricating acoustic wall panels similar in scope and complexity of this Project.

B. Codes and Standards:

1. All work shall conform to the California Building Code in effect at time of project approval.

2.0 PRODUCTS

2.1 MANUFACTURER

A. Acoustic Wall Panels: Kirei USA, LLC; 619-236-9924; www.kireiusa.com or approved equal.

2.2 MATERIALS

A. Acoustic Wall Panels: Acoustically-absorbent panel with a felt-like finish, made from 100% PET plastic with up to 60% post-consumer content.

2.3 TACKABLE WALL PANELS

A. Product: Echopanel Panel

1. Physical Properties:

a. Thickness: 12mm

b. Size: 47.28” x 94.44” (31 square feet per panel)

c. Weight: 16 lbs per panel

d. Noise Reduction Coeffieient: 0.36 (no air gap) per ASTM C423-90A

e: Fire Rating: per ASTM E84 Class C

f. VOC Emissions: per ASTM D5116 < 0.02mg/m2/hour (7 days)

2. Applications: Wall with construction adhesive per manufacturers recommendation.

3. Color: See Schedule

4. Pattern/Shape: As Indicated on Drawings

5. Edge Profile: Straight

2.4 ACCESSORIES

A. Provide J molding at exposed edges of panels.

2.5 SCHEDULE

Reference #	**Series**	**Size**	**Color**
WT-1	echopanel panel	-	To be selected by Architect from Manufacturer's full range of colors.
WT-2	echopanel panel	-	Orange #295
WT-3	echopanel panel	-	Blue #325
WT-4	echopanel panel	-	Green #362
Note: Verify location, type and size with drawings			

3.0 EXECUTION

3.1 SURFACE CONDITIONS

A. Inspection:

1. Prior to installation of the work of this Section, carefully inspect the installed work of all other trades and verify that all such work is complete to the point where the installation included in this Section may properly commence.

2. Examine surfaces for conditions that could adversely affect the performance of the acoustic wall panels.

3. Surfaces to be adhesively bonded shall be clean, dry and free of any dust, loose paint, wax moisture, dirt, grease, oil rust or other contaminants.

3.2 INSTALLATION

A. General:

1. Install materials according to Manufacturer's recommendations.

2. Attachment of panels to the wall will include the use of internal splines and J molding as required for top and bottom edges.

B. Installation with construction adhesive

1. Apply adhesive evenly to back of panel. Keep adhesive approximately 1/8" from the edge of the material.

2. Apply panel to final location.

3.3 SCHEDULE

A. Verify location, pattern and size of panels prior to beginning installation.

3.4 CLEAN UP

A. Upon completion, clean the work of this Section in accordance with recommendations of the manufacturer(s) of the materials used.

B. Remove all debris resulting from this work.

3.5 WARRANTY

A. The products delivered shall be free of defects.

B. Manufacturer's standard performance warranty, as available for specified installation and environmental conditions.

END OF SECTION

099100 - PAINTING

1.0 GENERAL

1.1 SUMMARY

A. This Section includes all labor, materials, equipment, operations, or methods listed, mentioned or scheduled on the plans and/or herein specified, including all incidentals necessary and required for completion of work under this Section.

B. Provide the following in areas of new work and remodeling as specified and scheduled herein:

1. Provide surface preparation and painting for exterior trim and walls (to match existing).

2. Provide surface preparation and back priming for all interior painted or clear finished wood surfaces.

3. Provide preparation for and painting all interior surfaces including all priming.

1.2 RELATED SECTIONS

A. Documents affecting work of this Section include, but are not necessarily limited to, these Contract Documents.

B. Section 051200 – Structural Steel Framing

C. Section 076000 – Flashing and Sheet Metal

D. Section 077100 – Roof Specialties

E. Division 9 - Finishes, all sections.

1.3 SUBMITTALS

A. Comply with pertinent provisions of these Contract Documents.

B. Submit 3 brushouts of each color including the specific paint sheen specified.

C. Submit MSDS to verify that each paint and coating used complies with the current VOC and chemical component limits of Green Seal's Standard GS-11 requirements.

1.4 QUALITY ASSURANCE

A. Comply with governing codes and regulations.

B. Deliver, handle and store materials in accordance with their manufacturer's instructions.

1.5 ENVIRONMENTAL REQUIREMENTS

A. Paint shall comply, at a minimum with the regulations of the California Air Resources Board for the Bay Area.

B. Water-Borne Latex Emulsion Paint: Shall not be formulated or manufactured with formaldehyde, halogenated solvents, aromatic hydrocarbons, mercury or mercury compounds, or tinted with pigments of lead, cadmium, chromium VI and their oxides.

1. Zero-low VOC paint: Flat and eggshell. VOC content less than .10g/l.

2. Low VOC paint: Semi-gloss and Gloss. VOC content less than 100 g/l.

C. Oil-Based Paint: Low VOC paint. VOC content shall not exceed 380 g/l. Shall not contain halogenated solvents. Shall not be formulated or manufactured with formaldehyde, mercury or mercury compounds, or tinted with pigments of lead, cadmium, chromium VI and their oxides. Shall not be formulated or manufactured with aromatic hydrocarbons in excess of 10%. For increased resistance to yellowing, specify high quality Soya-based oil paints.

D. Recycled Latex Paint: Minimum 90% post-consumer recycled content. VOC content unknown. Available in pastel colors only.

E. Low Biocide Paint: Shall not contain formaldehyde. Shall not contain fungicides or bactericides that are classified as mercury acetates, phenol phenates, or phenol formaldehyde. Reduced shelf life. Paints are made to order, lead time may be 1 to 2 months. Interior use. Enviro-Safe - Chem-Safe Products 210-657-5321; Safecoat - American Formulation Manufacturing (AFM) 619-239-0321, or equal.

F. Natural Plant and Mineral-Based Finishes: Contain extracts from plant sources and minimally processed earth minerals, such as chalk or iron oxides. Solvents include citrus oils and small amounts of low-odor petroleum solvents (de-aromaticized issoparafinics). Contains natural VOCs, test paint with chemically sensitive individuals prior to installation. AURO available from Earthsake in

Berkeley, CA 510-559-8440; Bioshield, Livos available from Eco Design Company 505-438-3448, or equal.

G. Urethane Finishes: Water emulsion urethane. Flecto Elite Diamond Finish - Flecto Company, Inc. 800-635-3286.

H. Penetrating Oil Finishes: Shall not contain lead acetate or cobalt manganese (drying agents). Interior use only. Woodfinisher's Pride - Woodworkers Store Catalog 612-4528-2199; Tried and True Wood Finishes 607-387-9280.

I. Conventional Pigments: Pigments used in conventional paints contain the following toxic compounds. Their use should be avoided. If used, avoid heavily pigmented paints.:

1. White: Antimony oxide, titanium dioxide, rutile titanium dioxide.

2. Yellow-orange-red: Cadmium, cadmium lithopone, chrome yellow, molybdate orange, strontium chromate, zinc chromate.

3. Blue: Phthalocyanine blue.

4. Green: Chrome green, Chromium oxide, hydrated chromium oxide, phthalocyanine green.

5. Biocides: Specify levels below 0.025%

2.0 PRODUCTS

2.1 MANUFACTURER - INTERIOR AND EXTERIOR

A. Kelly-Moore Paints, www.kellymoore.com, unless otherwise noted.

2.2 SCHEDULE

INTERIOR WALL COLORS		
Reference #	**Manufacturer**	**Color**
WP-1 General	Kelly-Moore Paints	KMW24 BUD'S SAILS
WP-2 Accent Orange	Kelly-Moore Paints	KMW5394 WINTER SUNSET
WP-3 Accent Blue	Kelly-Moore Paints	KM5049 SWAGGER
WP-4 Accent Green	Kelly-Moore Paints	KM5141 HAPPY TUNE

INTERIOR ACCENT COLORS		
Reference #	**Manufacturer**	**Color**
AP	Kelly-Moore Paints	To be selected by Architect from Manufacturers full range of colors
INTERIOR CEILING COLORS		
Reference #	**Manufacturer**	**Color**
CP	Kelly-Moore Paints	To be selected by Architect from Manufacturers full range of colors
-	-	-
EXTERIOR COLORS		
Reference #	**Manufacturer**	**Color**
A	Benjamin Moore Paints	HC-81 MANCHESTER TAN
B	Kelly-Moore Paints	KM5764 MENDOCINO HILLS
C Accent Color	Kelly-Moore Paints	To be selected by Architect from Manufacturers full range of colors
Note: Verify location with drawings and note systems below		

2.3 INTERIOR PAINT SYSTEMS

A. Minimum color pallet of five (5) interior colors, per schedule. The Architect will make final color selections.

B. Gypsum Board - For all interior rooms including, new and existing, unless otherwise noted:

1. Ceiling:

   a. Prep: Sand
   b. First coat: 971 Acry-Plex
   c. Two coats: 1005 Premium Professional Low VOC Interior Latex Wall Paint Flat

2. Walls:

   a. Prep: Sand
   b. First coat: 971 Acry-Plex
   c. Two coats: 1005 Premium Professional Low VOC Interior Latex Wall Paint Flat

B. Wood (doors, trim, trees, etc.) - For all interior rooms including, new and existing, unless otherwise noted:

a.	Prep:	Sand
b.	First coat:	295 Kel-Bond universal Primer
c.	Two coats:	1050 Premium Professional Low VOC Interior Acrylic Semi-Gloss

C. Natural Finish Wood - For all interior rooms including, new and existing, unless otherwise noted:

a.	Prep:	Sand
b.	First coat:	Old Masters Masters Armor Gloss
c.	Two coats:	Old Masters Masters Armor Semi-Gloss

D. Galvanized Metal - For all interior rooms including, new and existing, unless otherwise noted:

a.	Prep:	Sand and refinish areas of rust and generally re-coat
b.	First coat:	5725 DTM Primer
c.	Two coats:	5885 DTM High Performance Semi-Gloss Enamel

E. Ferrous Metal - For all interior rooms including, new and existing, unless otherwise noted:

a.	Prep:	Sand and refinish areas of rust and generally re-coat
b.	First coat:	5725 DTM Primer
c.	Two coats:	5885 DTM High Performance Semi-Gloss Enamel

2.4 EXTERIOR PAINT SYSTEMS

A. Minimum color pallet of two (2) general exterior colors and one (1) exterior accent color, per schedule. The Architect will make final color selections.

B. All wood, where occurs, to be back primed a minimum of three (3) coats of paint/stain/sealer color on interior.

C. Galvanized Metal (vents, flashing, trim, etc.):

a.	Prep:	Sand and refinish areas of rust and generally re-coat
b.	First coat:	5725 DTM Primer
c.	Two coats:	1245 Acry-Shield Low Sheen

D. Wood (beams, girders, joists, trim, etc.):

a.	Prep:	Sand
b.	First coat:	255 Acry-Shield Acrylic Exterior Wood Primer
c.	Two coats:	1245 Acry-Shield Low Sheen

E. Cement Plastering:

a.	Prep:	Per Specification Section 092400 – Portland Cement Plastering
b.	First coat:	295 Kel-Bond Universal Primer
c.	Two coats:	1245 Acry-Shield Low Sheen

F. Ferrous Metal (columns, beams, purlins, etc.):

a.	Prep:	SSPC-SP-1 SP-2 or SP-3
b.	First coat:	5725 DTM Primer
c.	Two coats:	Rust-Oleum System DTM Eggshell Finish

3.0 EXECUTION

3.1 INSTALLATION - GENERAL METHODS: INTERIOR & EXTERIOR

A. Inspect surfaces and correct unsatisfactory conditions. Beginning work means acceptance of substrates.

B. Comply with paint manufacturer's printed instructions and recommendations for preparation, priming and coating work. Coordinate with work of other Sections.

C. Remove hardware, accessories, and items in place and not to be painted, provide protection prior to surface preparation and painting, reinstall removed items.

D. Use a slightly different shade for each coat of paint so that it may be readily identified.

E. Primer and intermediate coats shall be unscarred and completely integral when succeeding coats are applied. Sand and dust between each coat to remove defects visible from a distance of five (5) feet.

F. Paint interior surfaces, which are a continuation of exterior surfaces, subject to exterior exposure (such as an out-swinging door), with the applicable exterior coating system.

G. Existing painted surfaces:

1. Patch dents, gouges and other imperfections in painted surfaces and sand smooth and flush with adjacent undamaged surfaces.

2. Remove dust, rust and other surface contaminates, loose and unsound paint coatings, etc. as required to provide clean and sound surfaces to receive new paint.

3. Remove gloss from enamel paints with steel wool or by treating them with a commercial de-glosser used in compliance with its manufacturer's instructions.

H. Completely cover surfaces to be painted to provide an opaque, smooth surface of uniform finish, color, appearance, and coverage. Painted surfaces with cloudiness, spotting, laps, brush marks, runs, sags, ropiness or other imperfections will not be acceptable.

I. Wood: Clean wood surfaces of dirt, oil or other foreign substances; sandpaper smooth surfaces exposed to view, and dust off.

1. Smoothing: Unless specifically noted to be left rough, smooth all finished wood surfaces exposed to view by using sandpaper. Where so required, use varying degrees of coarseness in sandpaper to produce uniformly smooth and unmarred wood surfaces.

2. Knots: Use knot sealer before application of priming coat.

   a. On small, dry, seasoned knots, thoroughly scrape and clean the surface and apply one coat of good quality knot-sealer before application of the priming coat.

   b. On large, open, seasoned knots, scrape off all pitch and thoroughly clean the area, followed by an application of one coat of good quality knot sealer.

3. Prime, stain or seal wood and plywood required to be site-painted immediately upon delivery to project; prime edges, ends, faces, undersides and backsides of wood; minimum one coat.

4. Provide second coat at end grain edges of any plywood close to grade and which serve as drip edge for siding system.

5. After priming, fill holes and imperfections in finish surfaces with putty or plastic wood-filler, sandpaper smooth when dry.

6. When transparent finish is required, back prime with space varnish.

7. Back prime paneling on interior partitions only when masonry, plaster or other wet wall construction occurs on backside.

J. Woodwork:

1. Hand sandpaper and dust clean. Sand interior woodwork between coats. Shellac or seal knot holes, pitch pockets and sappy areas. After first coat, putty nail holes, cracks and defects with putty or plastic compound.

K. Application: Apply paint in accordance with manufacturer's directions; use applicators and techniques best suited for substrate and type of material being applied.

1. Apply stain killing primer, when stains or blemishes show through final coat, until paint is a uniform finish, color and appearance.

2. Provide extra attention to assure dry film thickness at corners and crevices is equivalent to that of flat surfaces.

3. Paint surfaces behind movable equipment and furniture same as similar exposed surfaces; paint surfaces behind permanently fixed equipment and furniture with prime coat only.*

4. Paint interior surfaces of ducts, where visible through registers or grilles, with a flat, non-specular black paint.*

5. Paint backsides of access panels and removable or hinged covers to match exposed surfaces.

6. Finish all doors on tops, bottoms and side edges same as faces.

7. Sand lightly between each succeeding enamel or varnish coat.

L. Drying:

1. Allow sufficient drying time between coats.

2. Modify the period as recommended by the material manufacturer to suit adverse weather conditions.

3. Oil-base and oleo-resinous solvent-type paints shall be considered dry for recoating when the paint feels firm, does not deform or feel sticky under moderate pressure of the thumb, and the application of another coat of paint does not cause lifting of loss of adhesion of the undercoat.

M. Moisture content:

1. Use a moisture-meter approved by the Project Inspector to test surfaces.

2. Do not apply the initial coating until moisture meter reading is within limits recommended by the paint materials manufacturer.

N. Defects:

1. Sand and dust between coats to remove all defects visible to the unaided eye from a distance of five (5) feet.

3.2 SURFACE CONDITIONS

A. Inspection:

1. Prior to all work of this Section, carefully inspect the installed work of other trades and verify that all such work is complete to the point where this installation may properly commence.

2. Verify that paint finishes may be applied in strict accordance with all pertinent regulations and the requirements of this Section.

3. Number of Coats:

   a. Do not apply additional coats until completed coat has been inspected and approved by the Project Inspector.

   b. Only inspected and approved coats of paint will be considered in determining the number of coats applied.

B. Correction:

1. Examine all subsurfaces to receive work of this section. Report in writing to the General Contractor, with a copy to the Architect, any conditions which may prove detrimental to work of this section. Failure to observe this injunction will constitute a waiver to any subsequent claims to the contrary and will make this Contractor responsible for any corrections the Architect may require and this Contractor will be required to make such corrections at their own expense. Commencement of work will be construed as acceptance of all subsurfaces.

2. Do not proceed with work in areas of discrepancy until any discrepancies have been resolved.

3.3 INSPECTION

A. General: Do not apply additional coats until completed coat has been inspected and approved by the Project Inspector.

B. Number of coats: Only inspected and approved coats of paint will be considered in determining the number of coats applied.

3.4 REINSTALLATION OF REMOVED ITEMS

A. Following completion of painting in each space, reinstall all items removed for painting, using only workmen skilled in the particular trade.

3.5 CLEAN UP

A. General:

1. During progress of the Work, do not allow the accumulation of empty containers or other excess items in areas specifically set aside for that purpose.

2. Prevent accidental spilling of paint materials and, in the event of such spill, immediately remove all spilled material and the waste or other equipment used to clean up the spill, and wash the surfaces to their original undamaged conditions, all at no additional cost to the Owner.

3.6 WARRANTY

A. The product delivered shall be free from defects.

B. Manufacturer's standard performance warranty, as available for specified installation and environmental conditions.

END OF SECTION

Division 10:
Specialties

SECTION 102600 – WALL AND CORNER PROTECTION

1.0 GENERAL

1.1 SUMMARY

A. This Section includes all labor, materials, equipment, operations, or methods listed, mentioned or scheduled on the plans and/or herein specified, including all incidentals necessary and required for completion of work under this Section.

B. Provision of comer guards as shown on project Drawings and as specified herein.

1.2 RELATED SECTIONS

A. Documents affecting work of this Section include, but are not necessarily limited to, General Conditions, Special Conditions and Division 1 of these Contract Documents.

B. Section 092900 - Gypsum Board: Provision of gypsum board.

1.3 REFERENCES

A. ASTM - American Society for Testing and Materials

1. B221 - Specification for Aluminum-Alloy Extruded Bars, Rods, Wire, Shapes, and Tubes.

2. E84 - Test Method for Surface Burning Characteristics of Building Materials.

B. CBC - California Building Code, 2016 Edition

1.4 SUBMITTALS

A. Product Data: Submit product data for each wall surface protection system component and installation accessory required, including installation methods for each type of substrate. Provide written data on each required component including physical characteristics, such as durability, resistance to fading and flame resistance.

B. Shop Drawings: Submit shop drawings showing locations, extent, and installation details of comer guards. Show methods of attachment to adjoining construction.

C. Contract Closeout Submittals

1. Operation and Maintenance: Submit maintenance data for wall surface protection system components for inclusion in the Operating and Maintenance Manuals specified in Division 1.

1.5 QUALITY ASSURANCE

A. Regulatory Requirements: Provide wall surface protection system components that are identical to those tested in accordance with CBC Section 802 and ASTM E84 for the fire performance characteristics indicated below. Identify wall surface protection system components with appropriate markings from the testing and inspection organization.

1. Flame Spread: 25 or less.

2. Smoke Developed: 450 or less.

B. Impact Strength: Provide wall surface protection system components with a minimum impact resistance of 25.4 ft. x Ib/sq. ft. when tested in accordance with ASTM D256 (Izod impact, ft. x lb/in.).

1.6 MAINTENANCE

A. Maintenance Instructions: Provide the manufacturer's instructions for maintenance of installed work. Include recommended methods and frequency for maintaining optimum condition under anticipated traffic and use conditions. Include precautions against cleaning materials and methods that may be detrimental to finishes and performance.

B. Extra Materials: After completion of work, deliver not less than 2 percent of each type, color, and pattern of wall surface protection materials and components. Include accessory components as required. Replacement materials shall be from the same production run as materials installed. Package replacement materials with protective covering, identified with appropriate labels.

2.0 PRODUCTS

2.1 MANUFACTURERS

A. Acceptable Manufacturers: Pawling Corporation, Architectural Products Division; 32 Nelson Hill Rd., Wassaic, NY 12592, 1-800-431-3456, www.pawling.com, or approved equal.

2.2 MATERIALS

A. Stainless Steel Corner Guards: Fabricate comer guards to comply with

requirements indicated for design, dimensions, detail, finish, and member sizes

C. Fasteners: Provide concealed noncorrosive metal screws, bolts, and other fasteners compatible with aluminum components, hardware, anchors, and other items being fastened.

2.3 CORNER GUARDS

A. PRO-TEK Corner Guards, Model CG-55

1. 3-½” x 3-½” with 3/4” radius corner, stainless steel

   a. Corner guards shall be 90-degree angled

   b. Corner guards and components shall pass when tested in accordance with requirements for Flammability, Pull Out and Point Load, Impact Resistance, and Chemical and Stain Resistance tests.

2. Stainless Steel: Type 304, 16 gauge, #4 stain finish

   a. Lengthwise perimeter edges to include nominal 10° return bend.

   b. Edge burrs shall be removed

   c. Satin finish grain oriented parallel with length

   d. Single piece fabrication

3. Height: 4′-0”

B. Accessories:

1. Provide appropriate fasteners and accessories as required by manufacturer to properly complete corner guard installation as specified herein.

   a. Adhesive: Model ADH-50 low VOC polyurethane based construction adhesive.

2. Accessories shall be formed from stainless steel with matching finish.

3. Accessories shall allow for transitions around corners and return to wall at appropriate locations such as door openings.

2.4 FABRICATION

A. General: Fabricate wall protection systems to comply with requirements indicated for design, dimensions, details, finish, and member sizes, including wall thicknesses of components.

B. Preassemble components in the shop to the greatest extent possible to minimize field assembly. Disassemble only as necessary for shipping and handling.

C. Stainless Steel Corner Guards: Fabricate comer guards to comply with requirements indicated for design, dimensions, detail, finish, and member sizes.

3.0 EXECUTION

3.1 INSTALLATION

A. General: Install wall surface protection units plumb, level, and true to line without distortions.

1. Do not use materials with chips, cracks, voids, stains, or other defects that might be visible in the finished work.

B. Stainless Steel Comer Guards: Mount with PL Premium Adhesive in accordance with manufacturer's written instructions.

3.2 CLEAN UP

A. General: Immediately upon completion of installation, clean plastic covers and accessories using a standard ammonia based household cleaning agent. Clean metal components in accordance with the manufacturer's recommendations.

B. Remove excess adhesive using methods and materials recommended by manufacturer.

END OF SECTION

SECTION 102813 - ACCESSORIES

1.0 GENERAL

1.1 SUMMARY

A. This Section includes all labor, materials, equipment, operations, or methods listed, mentioned or scheduled on the plans and/or herein specified, including all incidentals necessary and required for completion of work under this Section.

B. Provide and install toilet accessories and all other items as specified herein:

1. Paper towel dispensers, recessed.

2. Soap dispensers.

1.2 RELATED SECTIONS

A. Documents affecting work of this Section include, but are not necessarily limited to, General Conditions, Special Conditions and Division 1 of these Contract Documents.

B. Section 092900 - Gypsum Board

C. Section 099100 - Painting

D. Division 22 - Mechanical

E. Division 26 - Electrical

1.3 SUBMITTALS

A. Comply with provisions of Section 013300, Submittal Procedures.

B. Submit for approval product data and accessory schedule, including manufacturer’s full range of standard finish options and colors.

1.4 DELIVERY, STORAGE AND HANDLING

A. Deliver, handle and store materials in accordance with manufacturer’s instructions.

1.5 QUALITY ASSURANCE

A. Comply with governing codes and regulations.

2.0 PRODUCTS

2.1 MANUFACTURERS

A. Acceptable Manufacturers: AS I; Bobrick Washroom Equipment, Inc., Bradley Corporation, or approved equal.

2.2 MATERIALS

A. Materials - General: Fabricate toilet accessory items form the following materials and according to requirements specified for individual accessory items.

1. Stainless Steel: AISl Type 302/304, with polished No. 4 finish, 22 gauge minimum thickness, unless otherwise indicated.

2. Sheet Steel: Cold-rolled, commercial quality ASTM A366, 20 gauge minimum thickness, unless otherwise indicated. Surface preparation and metal pretreatment as required for applied finish.

3. Galvanized Steel Sheet: ASTM A527 G60.

4. Chromium Plating: Nickel and chromium electro-deposited on base metal, ASTM B456, Type SC 2.

5. Galvanized Steel Mounting Devices: ASTM A153, hot-dip galvanized after fabrication.

6. Fasteners: Screws, bolts, and other devices of same material as accessory unit, or of galvanized steel where concealed.

7. Keys: Provide universal keys for access to toilet accessory units requiring internal access for servicing, resupply. Provide a minimum of 6 keys to the Owner.

2.3 ACCESSORIES

A. Provide the following accessories:

1. Wall Mounted Towel Dispenser: As manufactured by Bobrick, B-2620 Bradley or approved equal.

2. Wall Mounted Soap Dispenser: As manufactured by Bobrick, B-2112 or approved equal.

3. Under Sink ADA Pipe Insulation: As specified in Section 072101.

B. Mounting Plates: Non-corrosive material. Provide as required.

2.4 FABRICATION

A. General: Only a maximum 1-1/2 inch diameter, unobtrusive stamped manufacturer logo, as approved by the Architect, is permitted on exposed face of toilet or bath accessory units. On either interior surface not exposed to view or back surface, provide additional identification by either a printed, waterproof label or a stamped nameplate, indicating manufacturer's name and product model number.

B. Surface-Mounted Toilet Accessories, General: Except where otherwise indicated, fabricate units with tight seams and joints, exposed edges rolled. Hang doors or access panels with continuous stainless steel piano hinge. Provide concealed anchorage wherever possible.

3.0 EXECUTION

3.1 INSTALLATION

A. General: Install assemblies in accordance manufacturer's printed instructions and approved submittals in proper relation with adjacent construction and with uniform appearance. Coordinate with Work of other Sections.

1. Conceal evidence of drilling in partitions for mounting accessories.

2. Restore damaged finishes and test for proper operation of each accessory. Clean and protect work from damage.

B. Towel Dispenser:

1. Check Drawings and coordinate with Mechanical and Electrical Engineers to avoid protrusion from opposite wall, pipes, conduits, electrical wiring, etc.

2. Mount 66" from floor to top of unit for ADA compliance.

3. Provide framed wall opening; recessed depth required from finish face of wall is 4".

4. Provide filler, if necessary, to prevent a gap from finished wall and flange of unit.

5. Access to towels shall be 40" above finish floor to allow for forward and side reach.

6. Unit shall not project more than 1/4" from the wall.

7. Unit shall be operable with one hand and without tight grasping, pinching, or twisting of the wrist.

E. Soap Dispenser:

1. Mounting location for push button dispensers is 40" max from controls above the finish floor.

2. Push buttons and pistons should be operable with one hand and without tight grasping, pinching, or twisting of the wrist.

3. Activation of soap valves should not require more than 5 pounds of force when unit is completely filled.

END OF SECTION

SECTION 104000 – SIGNAGE

1.0 GENERAL

1.1 SUMMARY

A. This Section includes all labor, materials, equipment, operations, or methods listed, mentioned or scheduled on the plans and/or herein specified, including all incidentals necessary and required for completion of work under this Section.

B. Provide and install non-illuminated wall-mounted interior identifying devices herein referred to as "signage."

1. Wall mounted interior room signage for Room #144 Program Room

1.2 RELATED SECTIONS

A. Documents affecting work of this Section include, but are not necessarily limited to, General Conditions, Special Conditions and Division 1 of these Contract Documents.

B. Section 081100 - Metal Doors and Frames

C. Section 081416 – Flush Wood Doors

D. Section 099100 - Painting

1.3 REFERENCES

A. 2010 ADA Standards For Accessible Design

B. American National Standards Institute (ANSI).

C. 2016 California Building Code (CBC).

1. 2013 ICC/ANSI A117.1 - Accessible and Usable Buildings & Facilities

D. American Society for Testing and Materials (ASTM):

1. ASTM B209 - Specification for Aluminum and Aluminum-Alloy Sheet and Plate

2. ASTM D4956 - Specification for Retroreflective Sheeting for Traffic Control

E. American Architectural Manufacturer’s Association (AAMA):

1. AAMA 611 - Voluntary Specifications for Anodized Architectural Aluminum

2. AAMA 2603 - Voluntary Specification, Performance Requirements and Test Procedures for Pigmented Organic Coatings on Aluminum Extrusions and Panels.

F. National Association of Architectural Metal Manufacturers (NAAMM):

1.4 SUBMITTALS

A. Comply with pertinent provisions of Volumes 1 and 2 of these Contract Documents.

B. Submit manufacturer's descriptive literature and specifications, including brochures and color samples of material for selection, as applicable for approval

C. Submit shop drawings listing sign styles, lettering and locations, and overall dimensions of each sign, including methods of construction.

D. Submit full-size sample of sign type, style and color specified including method of attachment.

E. Submit Manufacturer's standard warranty information

1.5 QUALITY ASSURANCE

A. Signage shall comply with all applicable provisions of the 2016 CBC, ADA and ANSI A117.1-2009.

B. Manufacturer Qualifications: Manufacturer must submit 3 references showing comparable products for projects completed within the last 5 years.

C. Provide all signage systems from a single manufacturer.

D. All signage to be filed inspected after installation per CBC 11B-703.1.1.2.

1.6 DELIVERY, STORAGE AND HANDLING

A. Use all means necessary to protect signs before, during and after installation.

1. In the event of damage, make all repairs and replacements necessary to the approval of the Architect and at no additional cost to the District.

B. Deliver materials to jobsite in manufacturer's original unopened factory packaging.

C. Inspect materials at time of delivery to assure that specified products have been received.

D. Store materials in original packaging in a climate controlled environment and away

from direct sunlight.

2.0 PRODUCTS

2.1 MANUFACTURER

A. Interior Signage: Best Sign Systems, Inc., 1202 N. Park Ave., Montrose, CO 81401, 1-800-235-2378 or approved equal.

B. Architectural Signage Frames: The JRS Company Inc. 544 N. Rimsdale Avenue, P.O. Box 2035, Covina, CA 91722, 626-967-2432, www.jrscoinc.com, or approved equal.

2.2 PLASTIC/ACRYLIC SIGNS

A. Acceptable Product: "MP Plastic"

1. Two-color scratch resistant, non-static, fire retardant, washable melamine laminate with a non-glare surface. Color to be selected by Architect.

2. Sign plaque material shall consist of melamine laminate with phenolic core, approximately 1/8" thick, with background painted a contrasting color.

3. Signs shall be of one-piece construction; added-on and/or engraved characters are unacceptable.

4. Lettering:

   a. Tactile characters (letters, numerals, and symbols) on signs shall be raised 1/32" from sign plate face.

   b. Character font style shall be "Sans Serif" in uppercase and be accompanied by Grade 2 Braille, per 1117B.5.5.1

   c. Raised characters on all signs shall be between 5/8" and 2" high.

   d. Characters shall be centered on sign.

   e. Characters and background shall be eggshell, matte or other approved non- glare finish. Characters shall contrast with their background -either light characters on a dark background or dark characters on a light background.

5. Sign Sizes:

   a. Directional signs shall be 6" x 6".

   b. Room identification signs shall be 6" x 6", 8" x 6", or 10" x 3".

c. Room number signs shall be 6" x 2".

d. Room identification signs with 5" x 1" opening for occupants name shall be 6" x 6". Insert shall be 5-9/16" x 1-1/8".

2.3 ARCHITECTURAL SIGNAGE FRAMES

A. Wall Frame: Part No. 540, frames are fabricated from continuous aluminum extrusion

1. Corner style: Square

2. Frame Depth: ½”

3. Frame Wall Thickness: 1/8”

4. Finish Style: As selected by Architect from manufacturer’s full range of standard options, per Section 013300, Submittal Procedures.

B. See Drawings for filler plate.

2.4 ACCESSORIES

A. Vinyl foam tape.

B. Holes and screws.

2.5 BRAILLE SYMBOLS

A. Contracted California Grade 2 Braille shall be used wherever Braille symbols are specifically required.

1. Dots shall be 1/10 inch on centers in each cell with 2/10 inch space between cells.

2. Dots shall be raised a minimum of 1/40 inch above the background.

B. Mounting Location and Height: Where permanent identification is provided for rooms and spaces, raised letters shall be provided and shall be accompanied by Braille in conformance with Section 3105A.(e)7, The CalACS Accessibility Standards Interpretive Manual. Signs shall be installed on the wall adjacent to the latch outside of the door. Where there is no wall space on the latch side, including at double leaf doors, signs shall be placed on the nearest adjacent wall, preferably on the right. Mounting height shall be located 48 inches minimum above the finish floor or ground surface, measured from the baseline of lowest Braille cells and 60 inches maximum above the finish floor or ground surface, measured from the baseline of the highest line of raised characters. Mounting location shall be so that a clear floor space

of 18 inches minimum by 18 inches minimum, centered on the tactile characters, is provided beyond the arc of any door swing between the closed position and 45 degree open position.

3.0 EXECUTION

3.1 INSTALLATION

A. Surface Conditions: Prior to installation of signs, examine areas and conditions in which the signage system(s) will be installed to verify that all surfaces are ready and painted.

1. Complete all finishing operations, including painting, before installing signage.

2. Wall surface shall be dry and free from dirt, grease and loose paint.

B. Locate sign units and accessories as indicated on the Drawings. Use mounting methods of the type described and in compliance with the manufacturer's instructions and as indicated on the Drawings. For complete specifications, see interior and exterior sign schedules below.

C. Install signs level, plumb, and at heights indicated.

D. Mounting height for all door-mounted signage shall be 60" centered from floor, centered to the center line of the sign.

E. Mounting location and height for wall-mounted signage:

1. Signs shall be installed on wall adjacent to the latch side of the door. Where there is no wall space on the latch side, sign shall be placed on the nearest adjacent wall, preferably to the right.

2. Mounting height shall be 60" above finish floor, centered to the center line of the sign unless otherwise noted. On signs where braille symbols occur mounting height shall be 48 inches above the finish floor or ground surface, measured from the baseline of the highest line of raised characters.

3. Mounting location shall be so that a clear floor space of 18 inches minimum by 18 inches minimum, centered on the tactile characters, is provided beyond the arc of any door swing between the closed position and 45 degree open position.

4. Verbal description as to restroom usage, i.e. Men's, Women's, etc., shall be placed directly below the pictogram signage.

F. Adhesive: Follow manufacturer's instruction for complete application of

recommended adhesive to ensure proper bonding of signage to the surface specified on the drawings.

3.2 SIGN SCHEDULES

A. All interior signs shall be engraved 1/4" plastic laminate. For sign design (where lettering/symbols are to appear on sign), see drawings.

B. See Drawings for signage location

Table # 1: INTERIOR ROOM SIGN SCHEDULE

		SIGN TYPE									
LOCATION	**DOOR #**	**A**	**B**	**C**	**D**	**E**	**F**	**G**	**H**	**J**	**K**
PROGRAM ROOM #144	144A			(1) X							
PROGRAM ROOM #144	144E			(1) X							
PROGRAM ROOM #144	144F										(1) X
PROGRAM ROOM #144	144G										(1) X

Sign Types:

A “NOT AND EXIT” SIGN
B MAXIMUM OCCUPANCY SIGN
C ROOM IDENTIFICATION
D “EXIT” AT GRADE LEVEL EXTERIOR DOOR SIGN
E “EXIT ROUTE” SIGN
F ISA ACCESSIBLE BUILDING ENTRANCE SIGN
G TOILET DOOR SIGN
H TOILET WALL SIGN
J NO SMOKING SIGN
K EMERGENCY EXIT ONLY SIGN

(#) INDICATES NUMBER OF THIS TYPE OF SIGN TO PROVIDE AT SPECIFIED DOOR

3.3 CLEAN UP

A. Upon completion of installation, remove all debris resulting from work of this Section.

B. Clean all signage surfaces in accordance with manufacturer’s clean-up and maintenance instructions.

3.4 WARRANTY

A. Product delivered shall be free of defects.

END OF SECTION

SECTION 104413 – FIRE EXTINGUISHERS AND CABINETS

1.0 GENERAL

1.1 SUMMARY

A. This Section includes all labor, materials, equipment, operations, or methods listed, mentioned or scheduled on the plans and/or herein specified, including all incidentals necessary and required for completion of work under this Section.

B. Provide and install fully-recessed fire-rated fire extinguisher cabinets and fir extinguishers as shown on project Drawings.

1.2 RELATED SECTIONS

A. Documents affecting work of this Section include, but are not necessarily limited to, General Conditions, Special Conditions.

B. Section 092900 - Gypsum Board

1.3 REFERENCES

A. ASTM A366 - Commercial Steel (CS) Sheet, Carbon (0.15 Maximum Percent) Cold-Rolled.

1.4 SUBMITTALS

A. Comply with provisions of Section 013300, Submittal Procedures.

B. Product Data: Submit manufacturer's product data, including installation instructions.

C. Test Reports: Submit test reports from Warnock Hersey for fire-rated cabinets.

1.5 DELIVERY, STORAGE, AND HANDLING

A. Delivery: Deliver materials to site in manufacturer's original, unopened containers and packaging, with labels clearly identifying product name and manufacturer.

B. Storage: Store materials indoors in a clean, dry area in accordance with manufacturer's instructions.

C. Handling: Protect materials and finish from damage during handling and installation.

2.0 PRODUCTS

2.1 MANUFACTURERS

A. Acceptable Manufacturers: Larsen's Manufacturing Co., or approved equal.

2.2 MATERIALS

A. Fire Extinguishers

1. Multipurpose under pressure, dry chemical type bearing UL rating of 4A-60B:C, 10 pounds nominal capacity, 5 inch diameter, in enameled steel container.

B. Cabinets

1. Fully recessed; 1 piece cold-rolled steel construction with 18 gauge steel box, with trim, frame, door, and hardware to suit cabinet type, trim style, and door style indicated. Weld joints and grind smooth. Miter and weld perimeter door frames.

2. Provide reviewed manufacturer's stainless steel door handles.

3. Door Style: Larsen's "Vertical Duo Door", with square trim, or approved equal.

4. Door Glazing: Float glass complying with ASTM C1036, Condition A, Type I, Quality q3, Class 1 (clear).

C. Accessories

1. Brackets: Provide brackets for fire extinguishers designed to prevent accidental dislodge of extinguisher, of sizes required for type and capacity of extinguisher required.

2. Wall Mounted Signs

a. Provide wall mounted metal signs at 80 inches above the finished floor to center of sign for each fire extinguisher in cabinet. Separate wall mounted sign shall be provided for all extinguishers located in cabinets regardless of cabinet signage available from the manufacturer.

b. Sign Colors and Lettering: Double faced, flanged, aluminum, 12 inches high by 4 inches wide, fire extinguisher symbol, arrow and red with white letters, which reads “Fire Extinguisher". Wall mounted signs shall also be provided for other extinguishers in areas where the extinguisher may be obstructed from view during normal use of the facility. Provide permanent aluminum signs as appropriate for the application.

2.3 FINISHES FOR CABINETS, GENERAL

A. Comply with NAAMM MFM for recommendations relative to applying and designating finishes.

B. Protect mechanical finishes on exposed surfaces from damage by applying temporary strippable protective covering prior to shipping.

2.4 STEEL CABINET FINISHES

A. Steel Box: Manufacturer's matte paint applied to steel box.

B. Door: Primed steel.

3.0 EXECUTION

3.1 EXAMINATION

A. Examine areas to receive cabinets. Notify Architect if areas are not acceptable. Do not begin installation until unacceptable conditions have been corrected.

3.2 PREPARATION

A. Prepare rough openings using metal studs or double wood studs on all 4 sides of cabinet tub to be 1/4 inch larger than outside dimension of tub.

B. Ensure load bearing header be reinstalled if load bearing stud is cut to install cabinet.

3.3 INSTALLATION

A. Install cabinets in accordance with manufacturer's instructions at locations indicated on the drawings.

B. Install cabinets plumb, level, square, and rigid without warp or rack.

C. Secure cabinets to metal or wood studs using screws supplied by manufacturer.

D. Use manufacturer's supplied hardware.

3.4 ADJUSTING

A. Adjust doors and catches for smooth operation without binding.

B. Inspect and adjust locks to operate properly.

C. Touch-up marred finishes with manufacturer supplied paint.

D. Replace defective or damaged doors, glazing, or other components as directed by Architect.

3.5 CLEANING

A. Clean cabinets in accordance with manufacturer's instructions.

B. Do not use harsh cleaning materials or methods that would damage glazing or finish.

3.6 PROTECTION

A. Protect cabinets and finish from damage during construction.

END OF SECTION

Division 11:
Equipment

SECTION 115213 – PROJECTION SCREENS

1.0 GENERAL

1.1 SUMMARY

A. This Section includes all labor, materials, equipment, operations, or methods listed, mentioned or scheduled on the plans and/or herein specified, including all incidentals necessary and required for completion of work under this Section.

B. Section Includes:

1. Electrically operated projection screens.

1.2 RELATED SECTIONS

A. Documents affecting work of this Section include, but are not necessarily limited to, General Conditions, Special Conditions and Division 1 of these Contract Documents.

B. Section 055000 - Metal Fabrications: Provision of metal backing.

C. Section 095100 - Acoustical Ceilings: Provision of acoustical ceiling supports.

D. Division 26 - Electrical: Provision of rough-in and connection to power.

1.3 REFERENCES

A. FED STD - Federal Standard

1. 191 A/5760 - Mildew Resistance of Textile Materials.

B. FS - Federal Specifications

1. GG-S-00172D(1): Screen, Projection

.

C. NFPA - National Fire Protection Association

1. 701 - Standard methods of Fire Tests for Flame-Resistant Textiles and Films.

D. UL - Underwriters Laboratories, Inc.

1.4 DEFINITIONS

A. Gain: Ratio of light reflected from or refracted by screen material to that reflected perpendicularly from a magnesium carbonate surface as determined per FS GG-S-00172D(1).

B. Half-Gain Angle: The angle, measured from the axis of the screen surface, to the most central position on perpendicular plane through the horizontal centerline of the screen where the gain is half of the peak gain.

1.5 SUBMITTALS

A. Product Data: Submit manufacturer's product data.

B. Shop Drawings: Submit shop drawings showing layout and types of projection of screens. Show the following:

1. Location of screen centerline relative to ends of screen case.

2. Location of wiring connections.

3. Location of seams in viewing surfaces.

4. Connections to suspension systems for pendant and recess-mounted screens.

5. Anchorage details.

6. Details of juncture of exposed surfaces with adjacent finishes.

7. Frame details.

8. Accessories.

9. Wiring Diagrams: For electrically operated units.

2.0 PRODUCTS

2.1 MANUFACTURERS

A. Acceptable Manufacturer. Da-Lite, Claridge, or equal.

2.2 PROJECTION SCREEN, RECESSED CEILING

A. Material and Viewing Surface of Front Projection Screen: Provide screen manufactured from mildew and flame resistant fabric of type indicated for screen specified and complying with the following requirements:

1. Matte white viewing surface with gain characteristics complying with FS GG- S-00172D(1) for Type A screen surface.

2. Mildew Resistance: Provide mildew resistant screen fabrics as determined by Fed Std 191 A/5760.

3. Fire Performance Characteristics: Provide projection screen fabric identical to materials that have been tested for flame resistance according to both small and large scale tests of NFPA 701.

4. Seams: Where length of screen indicated exceeds maximum length produced without seams in fabric specified, provide screen with horizontal seam placed at bottom of screen at juncture between extra drop length and viewing surface.

5. Edge Treatment: Black masking borders.

6. Size of Viewing Surface:

   a. Electric Operate Screen: 10 feet-0 inches wide by 8 feet-0 inches high image size.

7. Extra Drop: Provide 10 feet-0 inches wide by 4 feet-0 inches at top of screen, in black color.

B. Electrically Operated Screens with Automatic Ceiling Closure: Units designed and fabricated for recessed installation in ceiling with bottom of case composed of 2 panels fully enclosing screen, motor, and wiring; 1 panel hinged and designed to open and close automatically when screen is lowered and fully raised, and the other panel removable or operable for access to interior of case; and complying with the following requirements:

1. Multi-station Control: Low-voltage control system consisting of a control unit with 24-V power supply and remote, 3-button or 3-position switches at locations indicated with metal device boxes and cover plates for flush wall mounting.

   a. Provide locking cover plates for switches.

   b. Provide infrared remote control consisting of battery-powered transmitter and receiver for use with low-voltage control system.

2. Screen Case with Motor in Roller. Aluminum framing with side, end, and top panels of fire-retardant hardboard or ABS plastic and with aluminum bottom panels, factory primed and constructed as follows:

   a. Offset mount bottom panels so their bottom surface will align flush with adjoining ceiling and the bottom edges of case sides and ends will be recessed behind ceiling finish.

3. Product: Da-Lite's "Boardroom Electrol", or equal.

3.0 EXECUTION

3.1 INSTALLATION

A. General: Install projection screens at locations indicated to comply with screen manufacturer's written instructions.

B. Install front projection screens with screen cases in position and relationship to adjoining construction indicated. Securely anchor to supporting substrate in a manner that produces a smoothly operating screen with vertical edges plumb and viewing surface flat when screen is lowered.

   1. Test electrically operated units to verify that screen, controls, limit switches, closure, and other operating components are in optimum functioning condition.

3.2 PROTECTING AND CLEAN UP

A. Protect projection screens after installation from damage during construction If damage occurs despite such protection, remove and replace damaged components or entire unit as required to provide units in their original, undamaged condition.

END OF SECTION

Division 12: Furnishings

SECTION 122400 – WINDOW SHADES

1.0 GENERAL

1.1 SUMMARY

A. This Section includes all labor, materials, equipment, operations, or methods listed, mentioned or scheduled on the plans and/or herein specified, including all incidentals necessary and required for completion of work under this Section.

B. Section Includes: Provision of electrically operated room darkening shades and housings.

1.2 RELATED SECTIONS

A. Documents affecting work of this Section include, but are not necessarily limited to, General Conditions, Special Conditions and Division 1 of these Contract Documents.

B. Section 084313 - Aluminum-Framed Storefronts: Provision of aluminum framed storefronts.

C. Section 092900 - Gypsum Board: Provision of gypsum board finishes.

D. Section 095100 - Acoustical Ceilings: Provision of acoustical ceilings.

E. Division 26 - Electrical: Provision of rough-in. The Owner will make final connection to power.

1.3 REFERENCES

A. AAMA - American Architectural Manufacturers Association

2.0 PRODUCTS

2.1 SHADES

A. Type A

1. Fabric: MechoShade, “Eurotwill 6000’ woven polyester and reinforced vinyl.

a. Basket weave pattern, open.

b. White side facing exterior.

c. Colon Stone-6018.

2. Lifting Mechanism: Electrically operated 3-1/2 inch tube.

3. Housing: Concealed rectangular sheet metal pocket with extruded aluminum ceiling support angle and closure, as manufactured by MechoShade, "Shade Pocket #5113”, or equal.

4. Control: Remotely control groups of blinds on each wall.

5. Special Requirements: Provide short shade to cover only transom where doors occur.

B. Type B

1. Fabric: MechoShade, “Equinox 0100 Series", woven fiberglass shade cloth with opaque acrylic backing.

a. 0 percent openness.

2. Lifting Mechanism: Electrically operated 3-1/2 inch tube.

3. Housing: Concealed rectangular sheet metal pocket with extruded aluminum ceiling support angle and closure, as manufactured by MechoShade, “Shade Pocket #5113", or equal.

4. Control: Remotely control groups of blinds on each wall,

a. Control each wall of each room separately.

5. Special Requirements: Provide short shade to cover only transom where doors occur.

C. Mounting Brackets: Manufacturer's standard for wall or ceiling mounting as indicated.

D. Chain Operation: Manufacturer’s standard.

E. Electrical Operation: Manufacturer's standard.

2.2 FINISHES

A. Housing: As selected by the Architect from manufacturer’s standard range of finishes.

3.0 EXECUTION

3.1 EXAMINATION

A. Examine construction to support, adjoin or otherwise contact and verify that shade dimensions are correct, painting has been completed, setting conditions are dry, clean and otherwise proper for installation.

B. Do not install shades until unsatisfactory conditions have been corrected.

3.2 INSTALLATION

A. Install items according to manufacturer's recommendations. Coordinate with electrical requirements.

B. Employ mechanics skilled in installations required.

C. Adjust as required such that shades permit proper positioning over full range of movement and smooth raising and lowering without binding.

END OF SECTION

Division 22:
Plumbing

Division 23:
HVAC

SECTION 23 05 48 – HVAC NOISE ATTENUATION

1.0 GENERAL

1.1 GENERAL SUMMARY

A. Section includes insulating the following duct services:

1. Indoor, concealed supply and return air plenums.

2. Flex ductwork

B. Related Sections

1. Section 23 07 13 Duct Insulation.

1.2 SUBMITTALS

A. Product Data: For each type of product indicated.

1.3 QUALITY ASSURANCE

A. Surface-Burning Characteristics: For insulation and related materials, as determined by testing identical products according to ASTM E 84, by a testing agency acceptable to authorities having jurisdiction. Factory label insulation and jacket materials and adhesive, mastic, tapes, and cement material containers, with appropriate markings of applicable testing agency.

1. Insulation Installed Indoors: Flame-spread index of 25 or less, and smoke-developed index of 50 or less.

2.0 PRODUCTS

2.1 ACOUSTICAL DUCT LINING AND INSULATION BOARD

A. All acoustical duct lining shall incorporate means to prevent fiber entrainment in the air stream.

B. Acceptable product for lining rectangular section ducts and plenums: Owens Corning “Fiberglass Duct Liner Board”.

C. Minimum sound-absorbing duct lining material: 1.0” thick, 2-3.0 pcf density.

D. Installation

1. Internal acoustical lining may be substituted at contractor’s option where

external thermal insulation wrapping is specified.

2. Insulate acoustical duct plenums and the inside perimeter of ductwork as indicated on the drawings, otherwise insulate according to the Ductwork Liner Schedule, see §3.3.

2.2 SHEET METAL DUCTS

A. Construct duct systems that serve spaces with noise criteria of NC 25 or less to meet SMACNA standards for medium pressure ductwork.

B. Duct and duct support must not contact ceiling framing and wires.

2.3 TURNING VANE ASSEMBLIES

A. Provide turning vanes of the hollow air-foil type rigidly connected to vane rails.

2.4 FLEXIBLE DUCT

A. Provide flexible duct consisting of flexible vapor barrier jacket, wire reinforced inner core, containing 1-1/2 inch-thick resilient glass fiber insulation faced with reinforced coated glass fabric, conforming to NFPA Standard 90A

3.0 EXECUTION

3.1 GENERAL INSULATION REQUIREMENTS

A. Surface shall be clean and dry with all foreign materials, such as dirt, oil, loose scale and rust removed.

B. Liner materials shall be installed in a first-class manner with smooth and even surfaces, with jackets and facings drawn tight and smoothly cemented down at all laps. Liner shall be continuous through all sleeves and openings, except at fire dampers and duct heaters (NFPA 90A). Vapor barriers shall be continuous and uninterrupted throughout systems with operating temperature 60°F and below. Seal vapor barrier over ends and exposed edges of insulation.

C. Apply insulation materials subject to the manufacturer's recommended temperature limits. Apply adhesives, mastics and coatings at the manufacturer's recommended minimum coverage.

3.2 INSTALLATION

A. Install materials in accordance with manufacturer's instructions.

B. Duct Liner:

1. Adhere insulation with adhesive for 100 percent coverage and mechanical fasteners located 12” on center and within 2” of butted joints. Refer to SMACNA Duct Liner Application Standards for installation.

2. Seal liner surface penetrations, all transverse (cuts, raw edges, etc.) with a liberal brush-applied sealant.

3. Duct dimensions indicated are net inside dimensions required for air flow. Increase duct size to allow for insulation thickness.

4. Surface adjacent to air flow, including at joints, shall be uniformly flat.

5. Seal butt joint edges of liner to prevent erosion. For rectangular ducts provide sheet metal end caps to cover liner edges at entering and leaving edges of lined duct section and seal with a liberal brush applied sealant. For plenum lining, provide sheet metal caps at exposed edges, e.g., where liner terminates at access door and seal with liberal brush-applied sealant.

6. Adhesives and Sealants: UL listed or classified. Type 1 per Adhesive and Sealant Council Standard ASC-A-7001, Design Polymerics PD 2545 or equal.

3.3 FLEXIBLE DUCT

A. Do not use flexible duct for duct connection through walls or gypsum board.

B. Connect diffuser to low pressure ducts directly or with maximum 84-inch lengths of flexible duct clamped or strapped in place.

C. Connect flexible ducts with liquid adhesive plus tape, draw band, or adhesive plus sheet metal screws

END OF SECTION

SECTION 23 05 53 – IDENTIFICATION FOR HVAC

1.0 GENERAL

1.1 SUMMARY

A. Section Includes:

1. Equipment labels.

1.2 SUBMITTAL

A. Product Data: For each type of product indicated.

2.0 PRODUCTS

2.1 EQUIPMENT LABLES

A. Plastic Labels for Equipment:

1. Material and Thickness: Multilayer, multicolor, plastic labels for mechanical engraving, 1/8 inch thick, and having predrilled holes for attachment hardware.

2. Letter Color: White.

3. Background Color: Black.

4. Maximum Temperature: Able to withstand temperatures up to 160 deg F.

5. Minimum Label Size: Length and width vary for required label content, but not less than 2-1/2 by 3/4 inch.

6. Minimum Letter Size: 1/4 inch for name of units if viewing distance is less than 24 inches, 1/2 inch for viewing distances up to 72 inches, and proportionately larger lettering for greater viewing distances. Include secondary lettering two-thirds to three-fourths the size of principal lettering.

7. Adhesive: Contact-type permanent adhesive, compatible with label and with substrate.

B. Label Content: Include equipment's Drawing designation or unique equipment number,

C. Equipment Label Schedule: For each item of equipment to be labeled, on 8-1/2-by-11-inch bond paper. Tabulate equipment identification number and identify Drawing numbers where equipment is indicated (plans, details, and schedules), plus the

Specification Section number and title where equipment is specified. Equipment schedule shall be included in operation and maintenance data.

2.2 PIPE LABELS

A. General Requirements for Manufactured Pipe Labels: Preprinted, color-coded, with lettering indicating service, and showing flow direction.

B. Pretensioned Pipe Labels: Precoiled, semirigid plastic formed to **partially cover** circumference of pipe and to attach to pipe without fasteners or adhesive.

C. Self-Adhesive Pipe Labels: Printed plastic with contact-type, permanent-adhesive backing.

D. Pipe Label Contents: Include identification of piping service using same designations or abbreviations as used on Drawings, pipe size, and an arrow indicating flow direction.

1. Flow-Direction Arrows: Integral with piping system service lettering to accommodate both directions or as separate unit on each pipe label to indicate flow direction.

2. Lettering Size: At least 1-1/2 inches high.

3.0 EXECUTION

3.1 PREPARATION

A. Clean equipment surface of substances that could impair bond of identification devices, including dirt, oil, grease, release agents, and incompatible primers, paints, and encapsulates.

3.2 EQUIPMENT LABEL INSTALLATION

A. Install or permanently fasten labels on each major item of mechanical equipment.

B. Locate equipment labels where accessible and visible.

END OF SECTION

SECTION 23 05 93 – TESTING, ADJUSTING & BALANCING HVAC

1.0 GENERAL

1.1 GENERAL SUMMARY

A. Section Includes:

1. Balancing Air Systems:

a. Constant-volume air systems.

1.2 DEFINITIONS

A. AABC: Associated Air Balance Council.

B. ASHRAE: American Society of Heating, Refrigerating and Air-Conditioning Engineers, Inc.

C. NEBB: National Environmental Balancing Bureau.

D. TAB: Testing, adjusting, and balancing.

E. TABB: Testing, Adjusting, and Balancing Bureau.

F. TAB Specialist: An entity engaged to perform TAB Work.

1.3 SUBMITTALS

A. Submittal:

1. Air-Balance Report: Documentation of work performed for ASHRAE 111-2008, "Balancing."

B. Strategies and Procedures Plan: Within 90 days of Contractor's Notice to Proceed, submit TAB strategies and step-by-step procedures as specified in "Preparation" Article.

C. Certified TAB reports.

1.4 QUALITY ASSURANCE

A. TAB Contractor Qualifications: Engage a TAB entity certified by AABC, NEBB or TABB.

1. TAB Field Supervisor: Employee of the TAB contractor and certified by AABC, NEBB or TABB.
2. TAB Technician: Employee of the TAB contractor and who is certified by AABC, NEBB, or TABB as a TAB technician.

B. Certify TAB field data reports and perform the following:

1. Review field data reports to validate accuracy of data and to prepare certified TAB reports.
2. Certify that the TAB team complied with the approved TAB plan and the procedures specified and referenced in this Specification.

C. TAB Report Forms: Use standard TAB contractor's forms approved by Architect.

D. Instrumentation Type, Quantity, Accuracy, and Calibration: As described in ASHRAE 111, Section 5, "Instrumentation."

2.0 PRODUCTS (Not Applicable)

3.0 EXECUTION

3.1 EXAMINATION

A. Examine the Contract Documents to become familiar with Project requirements and to discover conditions in systems' designs that may preclude proper TAB of systems and equipment.

B. Examine systems for installed balancing devices, such as manual volume dampers. Verify that locations of these balancing devices are accessible.

C. Examine the approved submittals for HVAC systems and equipment.

D. Examine design data including HVAC system descriptions, statements of design assumptions for environmental conditions and systems' output, and statements of philosophies and assumptions about HVAC system and equipment controls.

E. Examine ceiling plenums and underfloor air plenums used for supply, return, or relief air to verify that they meet the leakage class of connected ducts as specified in Division 23 Section "Metal Ducts" and are properly separated from adjacent areas. Verify that penetrations in plenum walls are sealed and fire-stopped if required.

F. Examine equipment performance data including fan and pump curves.

1. Relate performance data to Project conditions and requirements, including system effects that can create undesired or unpredicted conditions that cause reduced capacities in all or part of a system.

2. Calculate system-effect factors to reduce performance ratings of HVAC equipment when installed under conditions different from the conditions used to rate equipment performance. To calculate system effects for air systems, use tables and charts found in AMCA 201, "Fans and Systems," or in SMACNA's "HVAC Systems - Duct Design." Compare results with the design data and installed conditions.

G. Examine system and equipment installations and verify that field quality-control testing, cleaning, and adjusting specified in individual Sections have been performed.

H. Examine test reports specified in individual system and equipment Sections.

I. Examine HVAC equipment and filters and verify that bearings are greased, belts are aligned and tight, and equipment with functioning controls is ready for operation.

J. Examine motorized dampers and variable speed drives and verify that they are accessible and their controls are connected and functioning.

K. Examine operating safety interlocks and controls on HVAC equipment.

L. Report deficiencies discovered before and during performance of TAB procedures. Observe and record system reactions to changes in conditions. Record default set points if different from indicated values.

3.2 PREPARATION

A. Prepare a TAB plan that includes strategies and step-by-step procedures.

B. Complete system-readiness checks and prepare reports. Verify the following:

1. Permanent electrical-power wiring is complete.
2. Automatic temperature-control systems are operational.
3. Equipment and duct access doors are securely closed.
4. Balance, smoke, and fire dampers are open.
5. Ceilings are installed in critical areas where air-pattern adjustments are required and access to balancing devices is provided.
6. Windows and doors can be closed so indicated conditions for system operations can be met.

3.3 GENERAL PROCEDURES FOR TESTING AND BALANCING

A. Perform testing and balancing procedures on each system according to the procedures contained in ASHRAE 111-2008, or NEBB's "Procedural Standards for Testing, Adjusting, and Balancing of Environmental Systems", or SMACNA's "HVAC Systems - Testing, Adjusting, and Balancing" and in this Section.

1. Comply with requirements in ASHRAE 62.1-2010, Section 7.2.2, "Air Balancing."

B. Cut insulation, ducts, pipes, and equipment cabinets for installation of test probes to the minimum extent necessary for TAB procedures.

1. After testing and balancing, patch probe holes in ducts with same material and thickness as used to construct ducts.
2. Install and join new insulation that matches removed materials. Restore insulation, coverings, vapor barrier, and finish according to Division 23 Section "HVAC Insulation."

C. Mark equipment and balancing devices, including damper-control positions, valve position indicators, fan-speed-control levers, and similar controls and devices, with paint or other suitable, permanent identification material to show final settings.

D. Take and report testing and balancing measurements in inch-pound (IP) units.

3.4 GENERAL PROCEDURES FOR BALANCING AIR SYSTEMS

A. Prepare test reports for both fans and outlets. Obtain manufacturer's outlet factors and recommended testing procedures. Crosscheck the summation of required outlet volumes with required fan volumes.

B. Prepare schematic diagrams of systems' "as-built" duct layouts.

C. For variable-air-volume systems (DOAS), develop a plan to simulate diversity.

D. Determine the best locations in main and branch ducts for accurate duct-airflow measurements.

E. Check airflow patterns from the outdoor-air louvers and dampers and the return- and exhaust-air dampers through the supply-fan discharge and mixing dampers.

F. Locate start-stop and disconnect switches, electrical interlocks, and motor starters.

G. Verify that motor starters are equipped with properly sized thermal protection.

H. Check dampers for proper position to achieve desired airflow path.

I. Check for airflow blockages.

J. Check condensate drains for proper connections and functioning.

K. Check for proper sealing of air-handling-unit components.

L. Verify that air duct system is sealed as specified in Division 23 Section "Metal Ducts."

3.5 PROCEDURES FOR CONSTANT-VOLUME AIR SYSTEMS

A. Adjust fans to deliver total indicated airflows within the maximum allowable fan speed listed by fan manufacturer.

1. Measure total airflow.

a. Where sufficient space in ducts is unavailable for Pitot-tube traverse measurements, measure airflow at terminal outlets and inlets and calculate the total airflow.

2. Measure fan static pressures as follows to determine actual static pressure:

a. Measure outlet static pressure as far downstream from the fan as practical and upstream from restrictions in ducts such as elbows and transitions.
b. Measure static pressure directly at the fan outlet or through the flexible connection.
c. Measure inlet static pressure of single-inlet fans in the inlet duct as near the fan as possible, upstream from the flexible connection, and downstream from duct restrictions.
d. Measure inlet static pressure of double-inlet fans through the wall of the plenum that houses the fan.

3. Review Record Documents to determine variations in design static pressures versus actual static pressures. Calculate actual system-effect factors. Recommend adjustments to accommodate actual conditions.
4. Obtain approval from Architect for adjustment of fan speed higher or lower than indicated speed. Comply with requirements in Division 23 Sections for air-handling units for adjustment of fans, belts, and pulley sizes to achieve indicated air-handling-unit performance.
5. Do not make fan-speed adjustments that result in motor overload. Consult equipment manufacturers about fan-speed safety factors. Modulate dampers and measure fan-motor amperage to ensure that no overload will occur. Measure amperage in full-cooling, full-heating, economizer, and any other operating mode to determine the maximum required brake horsepower.

B. Measure air outlets and inlets without making adjustments.

1. Measure terminal outlets using a direct-reading hood or outlet manufacturer's written instructions and calculating factors.

C. Adjust air outlets and inlets for each space to indicated airflows within specified tolerances of indicated values. Make adjustments using branch volume dampers rather than extractors and the dampers at air terminals.

1. Adjust each outlet in same room or space to within specified tolerances of indicated quantities without generating noise levels above the limitations prescribed by the Contract Documents.
2. Adjust patterns of adjustable outlets for proper distribution without drafts.

D. Motorized dampers shall initially be fully open when in the unoccupied and occupied modes. Dampers shall close upon command from controls when the space(s) or are unoccupied during scheduled occupied hours. DOAS variable speed drive shall maintain constant static pressure within the ductwork. Air balancer shall witness proper operation of damper sequencing and provide statement of operation in commissioning report. Balance air distribution devices with all motorized dampers fully open.

3.6 PROCEDURES FOR MOTORS

A. Motors, 1/2 HP and Larger: Test at final balanced conditions and record the following data:

1. Manufacturer's name, model number, and serial number.
2. Motor horsepower rating.
3. Motor rpm.
4. Efficiency rating.
5. Nameplate and measured voltage, each phase.
6. Nameplate and measured amperage, each phase.
7. Starter thermal-protection-element rating.

B. Motors Driven by Variable-Frequency Controllers: Test for proper operation at speeds varying from minimum to maximum. Test the manual bypass of the controller to prove proper operation. Record observations including name of controller manufacturer, model number, serial number, and nameplate data.

3.7 PROCEDURES FOR CONDENSING UNITS

A. Verify proper rotation of fans.

B. Measure entering- and leaving-air temperatures.

C. Record compressor data.

3.8 PROCEDURES FOR TESTING, ADJUSTING, AND BALANCING EXISTING SYSTEMS

A. Perform a preconstruction inspection of existing equipment that is to remain and be reused.

1. Measure and record the operating speed, airflow, and static pressure of each fan.
2. Measure motor voltage and amperage. Compare the values to motor nameplate information.
3. Check the operation of the drain pan and condensate-drain trap.
4. Check bearings and other lubricated parts for proper lubrication.
5. Report on the operating condition of the equipment and the results of the measurements taken. Report deficiencies.

B. Perform testing and balancing of existing systems to the extent that existing systems are affected by the renovation work.

1. Compare the indicated airflow of the renovated work to the measured fan airflows, and determine the new fan speed and the face velocity of filters and coils.
2. Verify that the indicated airflows of the renovated work result in filter and coil face velocities and fan speeds that are within the acceptable limits defined by equipment manufacturer.
3. If calculations increase or decrease the air flow rates and water flow rates by more than 5 percent, make equipment adjustments to achieve the calculated rates. If increase or decrease is 5 percent or less, equipment adjustments are not required.
4. Balance each air outlet.

3.9 TOLERANCES

A. Set HVAC system's air flow rates within the following tolerances:

1. Supply, Return, and Exhaust Fans and Equipment with Fans: Plus or minus 10 percent.
2. Air Outlets and Inlets: Plus or minus 10 percent.

3.10 REPORTING

A. Initial Construction-Phase Report: Based on examination of the Contract Documents as specified in "Examination" Article, prepare a report on the adequacy of design for systems' balancing devices. Recommend changes and additions to systems' balancing devices to facilitate proper performance measuring and balancing. Recommend changes and additions to HVAC systems and general construction to allow access for performance measuring and balancing devices.

B. Status Reports: Prepare at 75% completion of construction progress report to describe completed procedures, procedures in progress, and scheduled procedures. Include a list of deficiencies and problems found in systems being tested and balanced. Prepare a separate report for each system and each building floor for systems serving multiple floors.

3.11 FINAL REPORT

A. General: Prepare a certified written report; tabulate and divide the report into separate sections for tested systems and balanced systems.

1. Include a certification sheet at the front of the report's binder, signed and sealed by the certified testing and balancing engineer.
2. Include a list of instruments used for procedures, along with proof of calibration.

B. Final Report Contents: In addition to certified field-report data, include the following:

1. Fan curves.
2. Manufacturers' test data.
3. Field test reports prepared by system and equipment installers.
4. Other information relative to equipment performance; do not include Shop Drawings and product data.

C. General Report Data: In addition to form titles and entries, include the following data:

1. Title page.
2. Name and address of the TAB contractor.
3. Project name.
4. Project location.
5. Architect's name and address.
6. Engineer's name and address.
7. Contractor's name and address.
8. Report date.
9. Signature of TAB supervisor who certifies the report.
10. Table of Contents with the total number of pages defined for each section of the report. Number each page in the report.
11. Summary of contents including the following:

    a. Indicated versus final performance.
    b. Notable characteristics of systems.
    c. Description of system operation sequence if it varies from the Contract Documents.

12. Nomenclature sheets for each item of equipment.

13. Data for terminal units, including manufacturer's name, type, size, and fittings.
14. Notes to explain why certain final data in the body of reports vary from indicated values.
15. Test conditions for fans and pump performance forms including the following:

    a. Settings for outdoor-, return-, and exhaust-air dampers.
    b. Conditions of filters.
    c. Cooling coil, wet- and dry-bulb conditions.
    d. Fan drive settings including settings and percentage of maximum pitch diameter.
    e. Settings for supply-air, static-pressure controller.
    f. Other system operating conditions that affect performance.

D. System Diagrams: Include schematic layouts of air distribution systems. Present each system with single-line diagram and include the following:

1. Quantities of outdoor, supply, return, and exhaust airflows.
2. Duct, outlet, and inlet sizes.
3. Terminal units.
4. Balancing stations.
5. Position of balancing devices.

E. Air-Handling (Fan coils) Test Reports: For air-handling units with coils, include the following (as applicable):

1. Unit Data:

    a. Unit identification.
    b. Location.
    c. Make and type.
    d. Model number and unit size.
    e. Manufacturer's serial number.
    f. Unit arrangement and class.
    g. Discharge arrangement.
    h. Sheave make, size in inches, and bore.
    i. Center-to-center dimensions of sheave, and amount of adjustments in inches.
    j. Number, make, and size of belts.
    k. Number, type, and size of filters.

2. Motor Data:

    a. Motor make, and frame type and size.
    b. Horsepower and rpm.
    c. Volts, phase, and hertz.

d. Full-load amperage and service factor.
e. Sheave make, size in inches, and bore.
f. Center-to-center dimensions of sheave, and amount of adjustments in inches.

3. Test Data (Indicated and Actual Values):

a. Total air flow rate in cfm.
b. Total system static pressure in inches wg.
c. Fan rpm.
d. Discharge static pressure in inches wg.
e. Filter static-pressure differential in inches wg.
f. Preheat-coil static-pressure differential in inches wg.
g. Cooling-coil static-pressure differential in inches wg.
h. Heating-coil static-pressure differential in inches wg.
i. Outdoor airflow in cfm.
j. Return airflow in cfm.
k. Outdoor-air damper position.
l. Return-air damper position.

F. Fan Test Reports: For supply, return, and exhaust fans, include the following:

1. Fan Data:

a. System identification.
b. Location.
c. Make and type.
d. Model number and size.
e. Manufacturer's serial number.
f. Arrangement and class.
g. Sheave make, size in inches, and bore.
h. Center-to-center dimensions of sheave, and amount of adjustments in inches.

2. Motor Data:

a. Motor make, and frame type and size.
b. Horsepower and rpm.
c. Volts, phase, and hertz.
d. Full-load amperage and service factor.
e. Sheave make, size in inches, and bore.
f. Center-to-center dimensions of sheave, and amount of adjustments in inches.
g. Number, make, and size of belts.

3. Test Data (Indicated and Actual Values):

a. Total airflow rate in cfm.
b. Total system static pressure in inches wg.
c. Fan rpm.
d. Discharge static pressure in inches wg.
e. Suction static pressure in inches wg.

G. Air-Terminal-Device Reports:

1. Unit Data:

a. System and air-handling unit identification.
b. Location and zone.
c. Apparatus used for test.
d. Area served.
e. Make.
f. Number from system diagram.
g. Type and model number.
h. Size.
i. Effective area in sq. ft.

2. Test Data (Indicated and Actual Values):

a. Air flow rate in cfm.
b. Air velocity in fpm.
c. Preliminary air flow rate as needed in cfm.
d. Preliminary velocity as needed in fpm.
e. Final air flow rate in cfm.
f. Final velocity in fpm.
g. Space temperature in deg F.

3.12 INSPECTIONS

A. Initial Inspection:

1. After testing and balancing are complete, operate each system and randomly check measurements to verify that the system is operating according to the final test and balance readings documented in the final report.
2. Check the following for each system:

a. Measure airflow of at least 10 percent of air outlets.
b. Measure room temperature at each thermostat/temperature sensor. Compare the reading to the set point.
c. Verify that balancing devices are marked with final balance position.
d. Note deviations from the Contract Documents in the final report.

B. Final Inspection:

1. After initial inspection is complete and documentation by random checks verifies that testing and balancing are complete and accurately documented in the final report, request that a final inspection be made by Commissioning Authority.
2. The TAB contractor's test and balance engineer shall conduct the inspection in the presence of the Commissioning Authority.
3. Commissioning Authority shall randomly select measurements, documented in the final report, to be rechecked. Rechecking shall be limited to either 10 percent of the total measurements recorded or the extent of measurements that can be accomplished in a normal 8-hour business day.
4. If rechecks yield measurements that differ from the measurements documented in the final report by more than the tolerances allowed, the measurements shall be noted as "FAILED."
5. If the number of "FAILED" measurements is greater than 10 percent of the total measurements checked during the final inspection, the testing and balancing shall be considered incomplete and shall be rejected.

C. TAB Work will be considered defective if it does not pass final inspections. If TAB Work fails, proceed as follows:

1. Recheck all measurements and make adjustments. Revise the final report and balancing device settings to include all changes; resubmit the final report and request a second final inspection.
2. If the second final inspection also fails, Owner may contract the services of another TAB contractor to complete TAB Work according to the Contract Documents and deduct the cost of the services from the original TAB contractor's final payment.

D. Prepare test and inspection reports.

END OF SECTION

SECTION 23 07 13 – DUCT INSULATION

1.0 GENERAL

1.1 GENERAL SUMMARY

A. Section includes insulating the following duct services:

1. Indoor, concealed supply and return air.

B. Related Sections

1. Section 23 05 48 Duct Liner.

1.2 SUBMITTALS

A. Product Data: For each type of product indicated.

1.3 QUALITY ASSURANCE

A. Surface-Burning Characteristics: For insulation and related materials, as determined by testing identical products according to ASTM E 84, by a testing agency acceptable to authorities having jurisdiction. Factory label insulation and jacket materials and adhesive, mastic, tapes, and cement material containers, with appropriate markings of applicable testing agency.

1. Insulation Installed Indoors: Flame-spread index of 25 or less, and smoke-developed index of 50 or less.

2.0 PRODUCTS

2.1 INSULATION MATERIALS

A. Comply with requirements in "Duct Insulation Schedule, General," "Indoor Duct and Plenum Insulation Schedule," where insulating materials shall be applied.

B. Products shall not contain asbestos, lead, mercury, or mercury compounds.

C. Products that come in contact with stainless steel shall have a leachable chloride content of less than 50 ppm when tested according to ASTM C 871.

D. Insulation materials for use on austenitic stainless steel shall be qualified as acceptable according to ASTM C 795.

E. Mineral-Fiber Blanket Insulation: Mineral or glass fibers bonded with a thermosetting resin. Comply with ASTM C 553, Type II and ASTM C 1290,

Type III with factory-applied FSK jacket. Factory-applied jacket requirements are specified in "Factory-Applied Jackets" Article. Thickness – 2”.

1. Products: Subject to compliance with requirements, provide one of the following:

   a. CertainTeed Corp.; SoftTouch Duct Wrap.

   b. Johns Manville; Microlite.

   c. Knauf Insulation; Friendly Feel Duct Wrap.

   d. Manson Insulation Inc.; Alley Wrap.

   e. Owens Corning; SOFTR All-Service Duct Wrap.

2.2 ADHESIVES

A. Materials shall be compatible with insulation materials, jackets, and substrates and for bonding insulation to itself and to surfaces to be insulated unless otherwise indicated.

B. Mineral-Fiber Adhesive: Comply with MIL-A-3316C, Class 2, Grade A.

1. Products: Subject to compliance with requirements, [provide the following] [provide one of the following] [available products that may be incorporated into the Work include, but are not limited to, the following]:

   a. Childers Brand, Specialty Construction Brands, Inc., a business of H. B. Fuller Company; CP-127.

   b. Eagle Bridges - Marathon Industries; 225.

   c. Foster Brand, Specialty Construction Brands, Inc., a business of H. B. Fuller Company; 85-60/85-70.

   d. Mon-Eco Industries, Inc.; 22-25.

2. Use adhesive that complies with the testing and product requirements of the California Department of Health Services' "Standard Practice for the Testing of Volatile Organic Emissions from Various Sources Using Small-Scale Environmental Chambers," including 2004 Addenda.

C. ASJ Adhesive, and FSK Jacket Adhesive: Comply with MIL-A-3316C, Class 2, Grade A for bonding insulation jacket lap seams and joints.

1. Products: Subject to compliance with requirements, provide one of the following:

a. Childers Brand, Specialty Construction Brands, Inc., a business of H. B. Fuller Company; CP-82.

b. Eagle Bridges - Marathon Industries; 225.

c. Foster Brand, Specialty Construction Brands, Inc., a business of H. B. Fuller Company; 85-50.

d. Mon-Eco Industries, Inc.; 22-25.

2. Use adhesive that complies with the testing and product requirements of the California Department of Health Services' "Standard Practice for the Testing of Volatile Organic Emissions from Various Sources Using Small-Scale Environmental Chambers," including 2004 Addenda.

2.3 TAPES

A. FSK Tape: Foil-face, vapor-retarder tape matching factory-applied jacket with acrylic adhesive; complying with ASTM C 1136.

1. Products: Subject to compliance with requirements, provide one of the following:

a. ABI, Ideal Tape Division; 491 AWF FSK.

b. Avery Dennison Corporation, Specialty Tapes Division; Fasson 0827.

c. Compac Corporation; 110 and 111.

d. Venture Tape; 1525 CW NT, 1528 CW, and 1528 CW/SQ.

2. Width: 3 inches.

3. Thickness: 6.5 mils.

4. Adhesion: 90 ounces force/inch in width.

5. Elongation: 2 percent.

6. Tensile Strength: 40 lbf/inch in width.

7. FSK Tape Disks and Squares: Precut disks or squares of FSK tape.

2.4 SECUREMENTS

A. Aluminum Bands: ASTM B 209, Alloy 3003, 3005, 3105, or 5005; Temper H-14, 0.020 inch thick, 1/2 inch wide with wing seal or closed seal.

1. Products: Subject to compliance with requirements, [provide the following] [provide one of the following] [available products that may be incorporated into the Work include, but are not limited to, the following]:

   a. ITW Insulation Systems; Gerrard Strapping and Seals.

   b. RPR Products, Inc.; Insul-Mate Strapping, Seals, and Springs.

B. Insulation Pins and Hangers:

1. Metal, Adhesively Attached, Perforated-Base Insulation Hangers: Baseplate welded to projecting spindle that is capable of holding insulation, of thickness indicated, securely in position indicated when self-locking washer is in place. Comply with the following requirements:

   a. Products: Subject to compliance with requirements, [provide the following] [provide one of the following] [available products that may be incorporated into the Work include, but are not limited to, the following]:

      1) AGM Industries, Inc.; Tactoo Perforated Base Insul-Hangers.

      2) GEMCO; Perforated Base.

      3) Midwest Fasteners, Inc.; Spindle.

   b. Baseplate: Perforated, galvanized carbon-steel sheet, 0.030 inch thick by 2 inches square.

   c. Spindle: Aluminum, fully annealed, 0.106-inch- diameter shank, length to suit depth of insulation indicated.

   d. Adhesive: Recommended by hanger manufacturer. Product with demonstrated capability to bond insulation hanger securely to substrates indicated without damaging insulation, hangers, and substrates.

2. Self-Sticking-Base Insulation Hangers: Baseplate welded to projecting spindle that is capable of holding insulation, of thickness indicated, securely in position indicated when self-locking washer is in place. Comply with the following requirements:

   a. Products: Subject to compliance with requirements, [provide the following] [provide one of the following] [available products that may be incorporated into the Work include, but are not limited to, the following]:

1) AGM Industries, Inc.; Tactoo Self-Adhering Insul-Hangers.

2) GEMCO; Peel & Press.

3) Midwest Fasteners, Inc.; Self Stick.

b. Baseplate: Galvanized carbon-steel sheet, 0.030 inch thick by 2 inches square.

c. Spindle: Aluminum, fully annealed, 0.106-inch- diameter shank, length to suit depth of insulation indicated.

d. Adhesive-backed base with a peel-off protective cover.

3. Insulation-Retaining Washers: Self-locking washers formed from 0.016-inch- thick, galvanized-steel or aluminum sheet, with beveled edge sized as required to hold insulation securely in place but not less than 1-1/2 inches in diameter.

a. Products: Subject to compliance with requirements, [provide the following] [provide one of the following] [available products that may be incorporated into the Work include, but are not limited to, the following:

1) AGM Industries, Inc.; RC-150.

2) GEMCO; R-150.

3) Midwest Fasteners, Inc.; WA-150.

4) Nelson Stud Welding; Speed Clips.

4. Protect ends with capped self-locking washers incorporating a spring steel insert to ensure permanent retention of cap in exposed locations.

C. Staples: Outward-clinching insulation staples, nominal 3/4-inch- wide, stainless steel or Monel.

2.5 CORNER ANGLES

A. Aluminum Corner Angles: 0.040 inch thick, minimum 1 by 1 inch, aluminum according to ASTM B 209, Alloy 3003, 3005, 3105, or 5005; Temper H-14.

3.0 EXECUTION

3.1 PREPARATION

A. Surface Preparation: Clean and dry surfaces to receive insulation. Remove materials that will adversely affect insulation application.

3.2 GENERAL INSTALLATION REQUIREMENTS

A. Install insulation materials, accessories, and finishes with smooth, straight, and even surfaces; free of voids throughout the length of ducts and fittings.

B. Install insulation materials, vapor barriers or retarders, and thicknesses required for each item of duct system as specified in insulation system schedules.

C. Install accessories compatible with insulation materials and suitable for the service. Install accessories that do not corrode, soften, or otherwise attack insulation in either wet or dry state.

D. Install insulation with longitudinal seams at top and bottom of horizontal runs.

E. Install multiple layers of insulation with longitudinal and end seams staggered.

F. Keep insulation materials dry during application and finishing.

G. Install insulation with tight longitudinal seams and end joints. Bond seams and joints with adhesive recommended by insulation material manufacturer.

H. Install insulation with least number of joints practical.

I. Where vapor barrier is indicated, seal joints, seams, and penetrations in insulation at hangers, supports, anchors, and other projections with vapor-barrier mastic.

1. Install insulation continuously through hangers and around anchor attachments.

2. For insulation application where vapor barriers are indicated, extend insulation on anchor legs from point of attachment to supported item to point of attachment to structure. Taper and seal ends at attachment to structure with vapor-barrier mastic.

3. Install insert materials and install insulation to tightly join the insert. Seal insulation to insulation inserts with adhesive or sealing compound recommended by insulation material manufacturer.

J. Apply adhesives, mastics, and sealants at manufacturer's recommended coverage rate and wet and dry film thicknesses.

K. Install insulation with factory-applied jackets as follows:

1. Draw jacket tight and smooth.

2. Cover circumferential joints with 3-inch- wide strips, of same material as insulation jacket. Secure strips with adhesive and outward clinching staples along both edges of strip, spaced 4 inches o.c.

3. Overlap jacket longitudinal seams at least 1-1/2 inches. Clean and dry surface to receive self-sealing lap. Staple laps with outward clinching staples along edge at 2 inches o.c.

a. For below ambient services, apply vapor-barrier mastic over staples.

4. Cover joints and seams with tape, according to insulation material manufacturer's written instructions, to maintain vapor seal.

5. Where vapor barriers are indicated, apply vapor-barrier mastic on seams and joints and at ends adjacent to duct flanges and fittings.

L. Cut insulation in a manner to avoid compressing insulation more than 75 percent of its nominal thickness.

M. Finish installation with systems at operating conditions. Repair joint separations and cracking due to thermal movement.

N. Repair damaged insulation facings by applying same facing material over damaged areas. Extend patches at least 4 inches beyond damaged areas. Adhere, staple, and seal patches similar to butt joints.

3.3 PENETRATIONS

A. Insulation Installation at Interior Wall and Partition Penetrations (That Are Not Fire Rated): Install insulation continuously through walls and partitions.

B. Insulation Installation at Fire-Rated Wall and Partition Penetrations: Terminate insulation at fire damper sleeves for fire-rated wall and partition penetrations. Externally insulate damper sleeves to match adjacent insulation and overlap duct insulation at least 2 inches.

1. Comply with requirements in Division 07 Section "Penetration Firestopping" for firestopping and fire-resistive joint sealers.

C. Insulation Installation at Floor Penetrations:

1. Duct: For penetrations through fire-rated assemblies, terminate insulation

at fire damper sleeves and externally insulate damper sleeve beyond floor to match adjacent duct insulation. Overlap damper sleeve and duct insulation at least 2 inches.

2. Seal penetrations through fire-rated assemblies. Comply with requirements in Division 07 Section "Penetration Firestopping."

3.4 INSTALLATION OF MINERAL-FIBER INSULATION

A. Blanket Insulation Installation on Ducts and Plenums: Secure with adhesive and insulation pins.

1. Apply adhesives according to manufacturer's recommended coverage rates per unit area, for 50 percent coverage of duct and plenum surfaces.

2. Apply adhesive to entire circumference of ducts and to all surfaces of fittings and transitions.

3. Install either capacitor-discharge-weld pins and speed washers or cupped-head, capacitor-discharge-weld pins on sides and bottom of horizontal ducts and sides of vertical ducts as follows:

a. On duct sides with dimensions 18 inches and smaller, place pins along longitudinal centerline of duct. Space 3 inches maximum from insulation end joints, and 16 inches o.c.

b. On duct sides with dimensions larger than 18 inches, place pins 16 inches o.c. each way, and 3 inches maximum from insulation joints. Install additional pins to hold insulation tightly against surface at cross bracing.

c. Pins may be omitted from top surface of horizontal, rectangular ducts and plenums.

d. Do not over compress insulation during installation.

e. Impale insulation over pins and attach speed washers.

f. Cut excess portion of pins extending beyond speed washers or bend parallel with insulation surface. Cover exposed pins and washers with tape matching insulation facing.

4. For ducts and plenums with surface temperatures below ambient, install a continuous unbroken vapor barrier. Create a facing lap for longitudinal seams and end joints with insulation by removing 2 inches from one edge and one end of insulation segment. Secure laps to adjacent insulation section with 1/2-inch outward-clinching staples, 1 inch o.c. Install vapor

barrier consisting of factory- or field-applied jacket, adhesive, vapor-barrier mastic, and sealant at joints, seams, and protrusions.

a. Repair punctures, tears, and penetrations with tape or mastic to maintain vapor-barrier seal.

b. Install vapor stops for ductwork and plenums operating below 50 deg F at 18-foot intervals. Vapor stops shall consist of vapor-barrier mastic applied in a Z-shaped pattern over insulation face, along butt end of insulation, and over the surface. Cover insulation face and surface to be insulated a width equal to two times the insulation thickness, but not less than 3 inches.

5. Overlap unfaced blankets a minimum of 2 inches on longitudinal seams and end joints. At end joints, secure with steel bands spaced a maximum of 18 inches o.c.

6. Install insulation on rectangular duct elbows and transitions with a full insulation section for each surface. Install insulation on round and flat-oval duct elbows with individually mitered gores cut to fit the elbow.

7. Insulate duct stiffeners, hangers, and flanges that protrude beyond insulation surface with 6-inch- wide strips of same material used to insulate duct. Secure on alternating sides of stiffener, hanger, and flange with pins spaced 6 inches o.c.

3.5 DUCT INSULATION SCHEDULE, GENERAL

A. Ducts Requiring Insulation:

1. Indoor, concealed supply and return air.

B. Items Not Insulated:

1. Metal ducts with duct liner of sufficient thickness to comply with energy code and ASHRAE/IESNA 90.1.

2. Factory-insulated flexible ducts.

3. Flexible connectors.

END OF SECTION

SECTION 23 31 13 – METAL DUCTS

1.0 GENERAL

1.1 SUMMARY

A. Section Includes:

1. Rectangular ducts and fittings.
2. Round ducts and fittings.
3. Sheet metal materials.
4. Sealants and gaskets.
5. Hangers and supports.
6. Seismic-restraint devices.

B. Related Sections:

1. Section 23 05 93 “Testing, Adjusting & Balancing HVAC
2. Section 23 07 13 “Duct Insulation”

1.2 PERFORMANCE REQUIREMENTS

A. Delegated Duct Design: Duct construction, including sheet metal thicknesses, seam and joint construction, reinforcements, and hangers and supports, shall comply with SMACNA-2006 "HVAC Duct Construction Standards - Metal and Flexible" and performance requirements and design criteria indicated in "Duct Schedule" Article. All supply, return and exhaust ductwork shall be constructed to 2” pressure classification.

B. Structural Performance: Duct hangers and supports and seismic restraints shall withstand the effects of gravity and seismic loads and stresses within limits and under conditions described in SMACNA's "HVAC Duct Construction Standards - Metal and Flexible" and ASCE/SEI 7-10, SMACNA's "Seismic Restraint Manual: Guidelines for Mechanical - OSHPD."

C. Airstream Surfaces: Surfaces in contact with the airstream shall comply with requirements in ASHRAE 62.1.

1.3 SUBMITTAL

A. Product Data: For each type of product indicated.

B. Submittals:

1. Product Data for Prerequisite EQ 1: Documentation indicating that duct system complies with ASHRAE 62.1, Section 5 - "Systems and Equipment."

2. Documentation indicating that duct system complies with ASHRAE/IESNA 90.1, Section 6.4.4 - "HVAC System Construction and Insulation."

3. Documentation of work performed for compliance with ASHRAE 62.1, Section 7.2.4 - "Ventilation System Start-Up."

4. For adhesives and sealants, documentation indicating that products comply with the testing and product requirements of the California Department of Health Services' "Standard Practice for the Testing of Volatile Organic Emissions from Various Sources Using Small-Scale Environmental Chambers."

C. Delegated-Design Submittal:

1. Sheet metal thicknesses.

2. Joint and seam construction and sealing.

3. Reinforcement details and spacing.

4. Materials, fabrication, assembly, and spacing of hangers and support.

2.0 PRODUCTS

2.1 RECTANGULAR DUCTS AND FITTINGS

A. General Fabrication Requirements: Comply with SMACNA-2006 "HVAC Duct Construction Standards - Metal and Flexible" based on indicated static-pressure class unless otherwise indicated.

B. Transverse Joints: Select joint types and fabricate according to SMACNA's "HVAC Duct Construction Standards - Metal and Flexible," Figure 2-1, "Rectangular Duct/Transverse Joints," for static-pressure class, applicable sealing requirements, materials involved, duct-support intervals, and other provisions in SMACNA-2006 "HVAC Duct Construction Standards - Metal and Flexible."

C. Longitudinal Seams: Select seam types and fabricate according to SMACNA's "HVAC Duct Construction Standards - Metal and Flexible," Figure 2-2, "Rectangular Duct/Longitudinal Seams," for static-pressure class, applicable sealing requirements, materials involved, duct-support intervals, and other provisions in SMACNA's "HVAC Duct Construction Standards - Metal and Flexible."

D. Elbows, Transitions, Offsets, Branch Connections, and Other Duct Construction: Select types and fabricate according to SMACNA's "HVAC Duct Construction Standards - Metal and Flexible," Chapter 4, "Fittings and Other Construction," for static-pressure class, applicable sealing requirements, materials involved, duct-support intervals, and other provisions in SMACNA's "HVAC Duct Construction Standards - Metal and Flexible."

2.2 ROUND DUCTS AND FITTINGS

A. General Fabrication Requirements: Comply with SMACNA-2006 "HVAC Duct Construction Standards - Metal and Flexible," Chapter 3, "Round, Oval, and Flexible Duct," based on indicated static-pressure class unless otherwise indicated.

1. Manufacturers: Subject to compliance with requirements, [provide products by one of the following] [available manufacturers offering products that may be incorporated into the Work include, but are not limited to, the following]:

a. McGill AirFlow LLC.

b. SEMCO Incorporated.

c. Sheet Metal Connectors, Inc.

d. Spiral Manufacturing Co., Inc.

B. Transverse Joints: Select joint types and fabricate according to SMACNA's "HVAC Duct Construction Standards - Metal and Flexible," Figure 3-1, "Round Duct Transverse Joints," for static-pressure class, applicable sealing requirements, materials involved, duct-support intervals, and other provisions in SMACNA's "HVAC Duct Construction Standards - Metal and Flexible."

C. Longitudinal Seams: Select seam types and fabricate according to SMACNA's "HVAC Duct Construction Standards - Metal and Flexible," Figure 3-2, "Round Duct Longitudinal Seams," for static-pressure class, applicable sealing requirements, materials involved, duct-support intervals, and other provisions in SMACNA's "HVAC Duct Construction Standards - Metal and Flexible."

D. Tees and Laterals: Select types and fabricate according to SMACNA's "HVAC Duct Construction Standards - Metal and Flexible," Figure 3-5, "90 Degree Tees and Laterals," using 45° lateral taps and Figure 3-6, "Conical Tees," for static-pressure class, applicable sealing requirements, materials involved, duct-support intervals, and other provisions in SMACNA's "HVAC Duct Construction Standards - Metal and Flexible."

2.3 SHEET METAL MATERIALS

A. General Material Requirements: Comply with SMACNA-2006 "HVAC Duct Construction Standards - Metal and Flexible" for acceptable materials, material thicknesses, and duct construction methods unless otherwise indicated. Sheet metal materials shall be free of pitting, seam marks, roller marks, stains, discolorations, and other imperfections.

B. Galvanized Sheet Steel: Comply with ASTM A 653/A 653M.

1. Galvanized Coating Designation: G60.

2. Finishes for Surfaces Exposed to View: Mill phosphatized.

C. Reinforcement Shapes and Plates: ASTM A 36/A 36M, steel plates, shapes, and bars; black and galvanized.

1. Where black- and galvanized-steel shapes and plates are used to reinforce aluminum ducts, isolate the different metals with butyl rubber, neoprene, or EPDM gasket materials.

D. Tie Rods: Galvanized steel, 1/4-inch minimum diameter for lengths 36 inches or less; 3/8-inch minimum diameter for lengths longer than 36 inches.

2.4 SEALANT AND GASKETS

A. General Sealant and Gasket Requirements: Surface-burning characteristics for sealants and gaskets shall be a maximum flame-spread index of 25 and a maximum smoke-developed index of 50 when tested according to UL 723; certified by an NRTL.

B. Two-Part Tape Sealing System:

1. Tape: Woven cotton fiber impregnated with mineral gypsum and modified acrylic/silicone activator to react exothermically with tape to form hard, durable, airtight seal.

2. Tape Width:3 inches.

3. Sealant: Modified styrene acrylic.

4. Water resistant.

5. Mold and mildew resistant.

6. Maximum Static-Pressure Class: 10-inch wg, positive and negative.

7. Service: Indoor and outdoor.

8. Service Temperature: Minus 40 to plus 200 deg F.

9. Substrate: Compatible with galvanized sheet steel (both PVC coated and bare), stainless steel, or aluminum.

10. Sealant shall comply with the testing and product requirements of the California Department of Health Services' "Standard Practice for the Testing of Volatile Organic Emissions from Various Sources Using Small-Scale Environmental Chambers."

C. Water-Based Joint and Seam Sealant:

1. Application Method: Brush on.

2. Solids Content: Minimum 65 percent.

3. Shore A Hardness: Minimum 20.

4. Water resistant.

5. Mold and mildew resistant.

6. VOC: Maximum 75 g/L (less water).

7. Maximum Static-Pressure Class: 10-inch wg, positive and negative.

8. Service: Indoor or outdoor.

9. Substrate: Compatible with galvanized sheet steel (both PVC coated and bare), stainless steel, or aluminum sheets.

2.5 HANGERS AND SUPPORTS

A. Hanger Rods for Noncorrosive Environments: Cadmium-plated steel rods and nuts.

B. Hanger Rods for Corrosive Environments: Electrogalvanized, all-thread rods or galvanized rods with threads painted with zinc-chromate primer after installation.

C. Strap and Rod Sizes: Comply with SMACNA's "HVAC Duct Construction Standards - Metal and Flexible," Table 5-1, "Rectangular Duct Hangers Minimum Size," and Table 5-2, "Minimum Hanger Sizes for Round Duct."

D. Steel Cables for Galvanized-Steel Ducts: Galvanized steel complying with ASTM A 603.

E. Steel Cable End Connections: Cadmium-plated steel assemblies with brackets, swivel, and bolts designed for duct hanger service; with an automatic-locking and clamping device.

F. Duct Attachments: Sheet metal screws, blind rivets, or self-tapping metal screws; compatible with duct materials.

G. Trapeze and Riser Supports:

1. Supports for Galvanized-Steel Ducts: Galvanized-steel shapes and plates.

2.6 SEISMIC-RESTRAINT DEVICES

A. Manufacturers: Subject to compliance with requirements, provide products by one of the following:

1. Cooper B-Line, Inc.; a division of Cooper Industries.

2. Ductmate Industries, Inc.

3. Hilti Corp.

4. Kinetics Noise Control.

5. Mason Industries.

6. TOLCO; a brand of NIBCO INC.

7. Unistrut Corporation; Tyco International, Ltd.

B. General Requirements for Restraint Components: Rated strengths, features, and applications shall be as defined in reports by an evaluation service member of the ICC Evaluation Service or the Office of Statewide Health Planning and Development for the State of California or an agency acceptable to authorities having jurisdiction.

1. Structural Safety Factor: Allowable strength in tension, shear, and pullout force of components shall be at least four times the maximum seismic forces to which they will be subjected.

C. Channel Support System: Shop- or field-fabricated support assembly made of slotted steel channels rated in tension, compression, and torsion forces and with accessories for attachment to braced component at one end and to building structure at the other end. Include matching components and corrosion-resistant coating.

D. Restraint Cables: ASTM A 603, galvanized-steel cables with end connections made of cadmium-plated steel assemblies with brackets, swivel, and bolts designed for restraining cable service; and with an automatic-locking and clamping device or double-cable clips.

E. Hanger Rod Stiffener: Steel tube or steel slotted-support-system sleeve with internally bolted connections, or reinforcing steel angle clamped] to hanger rod.

F. Mechanical Anchor Bolts: Drilled-in and stud-wedge or female-wedge type. Select anchor bolts with strength required for anchor and as tested according to ASTM E 488.

3.0 EXECUTION

3.1 DUCT INSTALLATION

A. Drawing plans, schematics, and diagrams indicate general location and arrangement of duct system. Indicated duct locations, configurations, and arrangements were used to size ducts and calculate friction loss for air-handling equipment sizing and for other design considerations. Install duct systems as indicated unless deviations to layout are approved on Shop Drawings and Coordination Drawings.

B. Install ducts according to SMACNA's "HVAC Duct Construction Standards - Metal and Flexible" unless otherwise indicated.

C. Install round ducts in maximum practical lengths.

D. Install ducts with fewest possible joints.

E. Install factory- or shop-fabricated fittings for changes in direction, size, and shape and for branch connections.

F. Unless otherwise indicated, install ducts vertically and horizontally, and parallel and perpendicular to building lines.

G. Install ducts close to walls, overhead construction, columns, and other structural and permanent enclosure elements of building.

H. Install ducts with a clearance of 1 inch, plus allowance for insulation thickness.

I. Route ducts to avoid passing through transformer vaults and electrical equipment rooms and enclosures.

J. Where ducts pass through non-fire-rated interior partitions and exterior walls and are exposed to view, cover the opening between the partition and duct or duct insulation with sheet metal flanges of same metal thickness as the duct. Overlap openings on four sides by at least 1-1/2 inches.

K. Where ducts pass through fire-rated interior partitions and exterior walls, install fire dampers. Comply with requirements in Division 23 Section "Air Duct Accessories" for fire and smoke dampers.

L. Protect duct interiors from moisture, construction debris and dust, and other foreign materials. Comply with SMACNA's "IAQ Guidelines for Occupied Buildings Under Construction," Appendix G, "Duct Cleanliness for New Construction Guidelines."

3.2 DUCT SEALING

A. Seal ducts to the following seal classes according to SMACNA's "HVAC Duct Construction Standards - Metal and Flexible":

1. Comply with SMACNA's "HVAC Duct Construction Standards - Metal and Flexible."

2. Unconditioned Space, Supply-Air Ducts in Pressure Classes 2-Inch wg and Lower: Seal Class B.

3. Unconditioned Space, Exhaust Ducts: Seal Class C.

4. Unconditioned Space, Return-Air Ducts: Seal Class B.

5. Conditioned Space, Supply-Air Ducts in Pressure Classes 2-Inch wg and Lower: Seal Class C.

6. Conditioned Space, Exhaust Ducts: Seal Class B.

7. Conditioned Space, Return-Air Ducts: Seal Class C.

3.3 HANGER AND SUPPORT INSTALLATION

A. Comply with SMACNA's "HVAC Duct Construction Standards - Metal and Flexible," Chapter 5, "Hangers and Supports."

B. Building Attachments: Concrete inserts, powder-actuated fasteners, or structural-steel fasteners appropriate for construction materials to which hangers are being attached.

1. Where practical, install concrete inserts before placing concrete.

2. Install powder-actuated concrete fasteners after concrete is placed and completely cured.

3. Use powder-actuated concrete fasteners for standard-weight aggregate concretes or for slabs more than 4 inches thick.

4. Do not use powder-actuated concrete fasteners for lightweight-aggregate concretes or for slabs less than 4 inches thick.

5. Do not use powder-actuated concrete fasteners for seismic restraints.

C. Hanger Spacing: Comply with SMACNA's "HVAC Duct Construction Standards - Metal and Flexible," Table 5-1, "Rectangular Duct Hangers Minimum Size," and Table 5-2, "Minimum Hanger Sizes for Round Duct," for maximum hanger spacing; install hangers and supports within 24 inches of each elbow and within 48 inches of each branch intersection.

D. Hangers Exposed to View: Threaded rod and angle or channel supports.

E. Support vertical ducts with steel angles or channel secured to the sides of the duct with welds, bolts, sheet metal screws, or blind rivets; support at each floor and at maximum intervals of 16 feet.

F. Install upper attachments to structures. Select and size upper attachments with pull-out, tension, and shear capacities appropriate for supported loads and building materials where used.

3.4 SEISMIC-RESTRAINT-DEVICE INSTALLATION

A. Install ducts with hangers and braces designed to support the duct and to restrain against seismic forces required by applicable building codes. Comply with SMACNA's "Seismic Restraint Manual: Guidelines for Mechanical Systems." And ASCE/SEI 7-10.

1. Space lateral supports a maximum of 40 feet o.c., and longitudinal supports a maximum of 80 feet o.c.

2. Brace a change of direction longer than 12 feet.

B. Select seismic-restraint devices with capacities adequate to carry present and future static and seismic loads.

C. Install cables so they do not bend across edges of adjacent equipment or building structure.

D. Install cable restraints on ducts that are suspended with vibration isolators.

E. Install seismic-restraint devices using methods approved by an evaluation service member of the ICC Evaluation Service, the Office of Statewide Health Planning and Development for the State of California or an agency acceptable to authorities having jurisdiction.

F. Attachment to Structure: If specific attachment is not indicated, anchor bracing and restraints to structure, to flanges of beams, to upper truss chords of bar joists, or to concrete members.

G. Drilling for and Setting Anchors:

1. Identify position of reinforcing steel and other embedded items prior to drilling holes for anchors. Do not damage existing reinforcement or embedded items during drilling. Notify the Architect if reinforcing steel or other embedded items are encountered during drilling. Locate and avoid prestressed tendons, electrical and telecommunications conduit, and gas lines.

2. Do not drill holes in concrete or masonry until concrete, mortar, or grout has achieved full design strength.

3. Wedge Anchors: Protect threads from damage during anchor installation. Heavy-duty sleeve anchors shall be installed with sleeve fully engaged in the structural element to which anchor is to be fastened.

4. Set anchors to manufacturer's recommended torque, using a torque wrench.

5. Install zinc-coated steel anchors for interior applications and stainless-steel anchors for applications exposed to weather.

3.5 CONNECTIONS

A. Make connections to equipment with flexible connectors complying with Division 23 Section "Air Duct Accessories."

B. Comply with SMACNA's "HVAC Duct Construction Standards - Metal and Flexible" for branch, outlet and inlet, and terminal unit connections.

3.6 START UP

A. Air Balance: Comply with requirements in Division 23 Section "Testing, Adjusting, and Balancing for HVAC."

3.7 DUCT SCHEDULE

A. Fabricate ducts with galvanized sheet steel.

B. Intermediate Reinforcement:

1. Galvanized-Steel Ducts: Galvanized steel.

C. Elbow Configuration:

1. Rectangular Duct: Comply with SMACNA's "HVAC Duct Construction Standards - Metal and Flexible," Figure 4-2, "Rectangular Elbows."

a. Velocity 1000 fpm or Lower:

1) Radius Type RE 1 with minimum 0.5 radius-to-diameter ratio.

2) Mitered Type RE 4 without vanes.

b. Velocity 1000 to 1500 fpm:

1) Radius Type RE 1 with minimum 1.0 radius-to-diameter ratio.

2) Radius Type RE 3 with minimum 0.5 radius-to-diameter ratio and two vanes.

3) Mitered Type RE 2 with vanes complying with SMACNA's "HVAC Duct Construction Standards - Metal and Flexible," Figure 4-3, "Vanes and Vane Runners," and Figure 4-4, "Vane Support in Elbows."

c. Velocity 1500 fpm or Higher:

1) Radius Type RE 1 with minimum 1.5 radius-to-diameter ratio.

2) Radius Type RE 3 with minimum 1.0 radius-to-diameter ratio and two vanes.

3) Mitered Type RE 2 with vanes complying with SMACNA's "HVAC Duct Construction Standards - Metal and

Flexible," Figure 4-3, "Vanes and Vane Runners," and Figure 4-4, "Vane Support in Elbows."

2. Rectangular Duct: Comply with SMACNA's "HVAC Duct Construction Standards - Metal and Flexible," Figure 4-2, "Rectangular Elbows."

   a. Radius Type RE 1 with minimum 1.5 radius-to-diameter ratio.

   b. Radius Type RE 3 with minimum 1.0 radius-to-diameter ratio and two vanes.

   c. Mitered Type RE 2 with vanes complying with SMACNA's "HVAC Duct Construction Standards - Metal and Flexible," Figure 4-3, "Vanes and Vane Runners," and Figure 4-4, "Vane Support in Elbows."

3. Round Duct: Comply with SMACNA's "HVAC Duct Construction Standards - Metal and Flexible," Figure 3-4, "Round Duct Elbows."

   a. Minimum Radius-to-Diameter Ratio and Elbow Segments: Comply with SMACNA's "HVAC Duct Construction Standards - Metal and Flexible," Table 3-1, "Mitered Elbows." Elbows with less than 90-degree change of direction have proportionately fewer segments.

      1) Velocity 1000 fpm or Lower: 0.5 radius-to-diameter ratio and three segments for 90-degree elbow.

      2) Velocity 1000 to 1500 fpm: 1.0 radius-to-diameter ratio and four segments for 90-degree elbow.

      3) Velocity 1500 fpm or Higher: 1.5 radius-to-diameter ratio and five segments for 90-degree elbow.

   b. Round Elbows, 12 Inches and Smaller in Diameter: Stamped or pleated.

   c. Round Elbows, 14 Inches and Larger in Diameter: Standing seam.

D. Branch Configuration:

1. Rectangular Duct: Comply with SMACNA's "HVAC Duct Construction Standards - Metal and Flexible," Figure 4-6, "Branch Connection."

   a. Rectangular Main to Rectangular Branch: 45-degree entry.

   b. Rectangular Main to Round Branch: Spin in.

2. Round: Comply with SMACNA's "HVAC Duct Construction Standards - Metal and Flexible," Figure 3-5, "90 Degree Tees and Laterals," and Figure 3-6, "Conical Tees." Saddle taps are permitted in existing duct.

   a. Velocity 1000 fpm or Lower: 90-degree tap.

   b. Velocity 1000 to 1500 fpm: Conical tap.

   c. Velocity 1500 fpm or Higher: 45-degree lateral.

E. General requirements:

1. Verify all dimensions at the site making all field measurements and shop drawings necessary for fabrication and erection of sheet metal work. Dimensions shown are net free areas. Lined ducts shall be fabricated so that new dimensions to inside of lining shall equal the sizes shown on drawings.

2. Make allowances for beams, pipes or other obstructions in building construction and for work of other trades. Check plans showing work of other trades and consult with Architect in the event of any interference.

3. Fittings: Manufactured fittings for all exposed ductwork. Use slop fit couplings for all joints.

4. Low Pressure Ductwork: Sheet metal gauges, transverse joint type and spacing, reinforcing type and spacing, In accordance with latest ASHRAE and SMACNA Schedules for low-pressure ductwork. Figures below are from the SMACNA Manual

5. Size round ducts installed in place of rectangular ducts in accordance with ASHRAE table of equivalent rectangular and round ducts. No variation of duct configuration or sizes permitted except by written permission.

6. Elbows shall be standard radius or square with vanes as shown on Fig 4-2, 3 & 4. Single vanes with ¾" trailing edge are preferred. Adjust the vanes so that the railing edges are parallel with the downstream duct when entering and leaving duct sizes are not equal. Turning vanes used in acoustically lined duct shall use an acoustical noise reduction turning vane.

7. Offsets & transitions - Fig 4-7, branch connections as illustrated in - Fig 4-1 or as indicated on the plans.

8. Round laterals - Fig 3-5, straight tees are not acceptable.

9. Conical tees and wyes– Fig 3-6.

10. Junctions between ducts: Branch take-off with 45°or 90° tapered spin-in. No branch duct to intersect main duct on bottom.

11. Seal all longitudinal and transverse duct and plenum joints and field formed seams airtight (Seal Class B) with medium water based, low VOC, pressure duct sealant.

12. Joints between ducts: Make with beaded sleeve joints. Apply duct sealer to male end. Mechanically fasten with sheet metal screws or pop rivets. Over joint and screw or rivet heads, apply coating of duct sealer.

13. Supports for ducts and plenums shall be band iron supports according to Section 4.

14. All ductwork shall be concealed behind finished wall, ceilings or floors unless specifically noted "exposed" on the drawings. Ductwork shown to be exposed shall be installed to provide maximum headroom and/or floor space.

15. Increase duct sizes gradually, not exceeding 15° divergence wherever possible. Divergence upstream of equipment shall not exceed 30°; convergence downstream shall not exceed 45°.

16. Access Panels and Doors in Ductwork: Provide in ductwork as indicated and wherever necessary or required for proper access to all instruments, controls, fire and automatic dampers and equipment and for convenient inspection and maintenance. Size as approved by Architect.

17. Install ductwork of sizes, runs and connections as shown on drawings.

18. Fabricate ductwork in workman-like manner with airtight joints; presenting smooth surfaces on inside, neatly finished on outside; construct with curves, bends; turning vanes to aid in easy flow of air. Make internal ends of slip joints in directions of air flow.

19. Install ductwork to provide maximum headroom.

20. Adjust ducts to suit local conditions. Alter duct sizes on basis of equal friction where required to facilitate installation.

21. Provide ductwork connected to air-handling equipment or air inlet and outlet devices, with all necessary transformation pieces, flexible fabric connections as required. Secure fabric connectors tightly to fans, casings and ducts. Allow at least 1" slack in connections. Do not paint fabric connectors. Provide galvanized steel weather shield over exterior top and sides of exposed flexible connections.

22. Diagonally or transversely cross break all panels on metal rectangular ducts over 18" in either direction.

23. Avoid penetration of ducts. Provide airtight rubber grommets at unavoidable penetrations of hanger rods.

24. Duct Openings: Provide openings where required to accommodate thermometers, smoke detectors, controllers, etc.

25. Provide pitot tube openings where required for testing of systems: Complete with metal cap with spring device or screw to ensure against air leakage.

26. Where openings are provided in insulated ductwork, install insulation material inside metal ring.

END OF SECTION

SECTION 23 33 00 – AIR DUCT ACCESSORIES

1.0 GENERAL

1.1 SUMMARY

A. Section Includes:

1. Manual volume dampers.
2. Turning vanes.
3. Flexile connectors.
4. Duct accessory hardware.

B. Related Section:

1. Section 23 05 48 “Noise Attenuation”.

1.2 SUBMITTAL

A. Product Data: For each type of product indicated.

B. Submittals:

1. Documentation indicating that units comply with ASHRAE 62.1-2010, Section 5 - "Systems and Equipment."
2. Documentation indicating that duct insulation R-values comply with tables in ASHRAE/IESNA 90.1, Section 6 - "Heating, Ventilating, and Air Conditioning."

1.3 QUALITY ASSURANCE

A. Comply with NFPA 90A, "Installation of Air Conditioning and Ventilating Systems," and with NFPA 90B, "Installation of Warm Air Heating and Air Conditioning Systems."

B. Comply with AMCA 500-D testing for damper rating.

2.0 PRODUCTS

2.1 MATERIALS

A. Comply with SMACNA's "HVAC Duct Construction Standards - Metal and Flexible" for acceptable materials, material thicknesses, and duct construction methods unless otherwise indicated. Sheet metal materials shall be free of pitting, seam marks, roller marks, stains, discolorations, and other imperfections.

B. Galvanized Sheet Steel: Comply with ASTM A 653/A 653M.

1. Galvanized Coating Designation: G60.

2. Exposed-Surface Finish: Mill phosphatized.

C. Reinforcement Shapes and Plates: Galvanized-steel reinforcement where installed on galvanized sheet metal ducts.

D. Tie Rods: Galvanized steel, 1/4-inch minimum diameter for lengths 36 inches or less; 3/8-inch minimum diameter for lengths longer than 36 inches.

2.2 MANUAL VOLUME DAMPERS

A. Standard, Steel, Manual Volume Dampers:

1. Manufacturers: Subject to compliance with requirements, provide products by one of the following:

a. Air Balance Inc.; a division of Mestek, Inc.
b. American Warming and Ventilating; a division of Mestek, Inc.
c. Flexmaster U.S.A., Inc.
d. McGill AirFlow LLC.
e. METALAIRE, Inc.
f. Nailor Industries Inc.
g. Pottorff; a division of PCI Industries, Inc.
h. Ruskin Company.
i. Vent Products Company, Inc.

2. Standard leakage rating, with linkage outside airstream.

3. Suitable for horizontal or vertical applications.

4. Frames:

a. Hat-shaped, galvanized-steel channels, 0.064-inch minimum thickness.
b. Mitered and welded corners.
c. Flanges for attaching to walls and flangeless frames for installing in ducts.

5. Blades:

a. Multiple or single blade.
b. Parallel- or opposed-blade design.
c. Stiffen damper blades for stability.
d. Galvanized-steel, 0.064 inch thick.

6. Blade Axles: Galvanized steel.

7. Tie Bars and Brackets: Galvanized steel.

B. Jackshaft:

1. Size: 1-inch diameter.

2. Material: Galvanized-steel pipe rotating within pipe-bearing assembly mounted on supports at each mullion and at each end of multiple-damper assemblies.

3. Length and Number of Mountings: As required to connect linkage of each damper in multiple-damper assembly.

C. Damper Hardware:

1. Zinc-plated, die-cast core with dial and handle made of 3/32-inch- thick zinc-plated steel, and a 3/4-inch hexagon locking nut.

2. Include center hole to suit damper operating-rod size.

3. Include elevated platform for insulated duct mounting.

2.3 TURNING VANES

A. Manufacturers: Subject to compliance with requirements, provide products by one of the following:

1. Ductmate Industries, Inc.

2. Duro Dyne Inc.

3. METALAIRE, Inc.

4. SEMCO Incorporated.

B. Manufactured Turning Vanes for Metal Ducts: Curved blades of galvanized sheet steel; support with bars perpendicular to blades set; set into vane runners suitable for duct mounting.

C. Manufactured Turning Vanes for Nonmetal Ducts: Fabricate curved blades of resin-bonded fiberglass with acrylic polymer coating; support with bars perpendicular to blades set; set into vane runners suitable for duct mounting.

D. General Requirements: Comply with SMACNA's "HVAC Duct Construction Standards - Metal and Flexible"; Figures 4-3, "Vanes and Vane Runners," and 4-4, "Vane Support in Elbows."

E. Vane Construction: Single.

2.4 FLEXIBLE CONNECTORS

A. Manufacturers: Subject to compliance with requirements, provide products by one of the following:

1. Ductmate Industries, Inc.

2. Duro Dyne Inc.

3. Ventfabrics, Inc.

B. Materials: Flame-retardant or noncombustible fabrics.

C. Coatings and Adhesives: Comply with UL 181, Class 1.

D. Metal-Edged Connectors: Factory fabricated with a fabric strip 3-1/2 inches wide attached to 2 strips of 2-3/4-inch- wide, 0.028-inch- thick, galvanized sheet. Provide metal compatible with connected ducts.

E. Indoor System, Flexible Connector Fabric: Glass fabric double coated with neoprene.

1. Minimum Weight: 26 oz./sq. yd..

2. Tensile Strength: 480 lbf/inch in the warp and 360 lbf/inch in the filling.

3. Service Temperature: Minus 40 to plus 200 deg F.

F. Outdoor System, Flexible Connector Fabric: Glass fabric double coated with weatherproof, synthetic rubber resistant to UV rays and ozone.

1. Minimum Weight: 24 oz./sq. yd..

2. Tensile Strength: 225 lbf/inch in the warp and 300 lbf/inch in the filling.

3. Service Temperature: Minus 40 to plus 250 deg F.

2.5 DUCT ACCESSORY HARDWARE

A. Instrument Test Holes: Cast iron or cast aluminum to suit duct material, including screw cap and gasket. Size to allow insertion of pitot tube and other testing instruments and of length to suit duct-insulation thickness.

B. Adhesives: High strength, quick setting, neoprene based, waterproof, and resistant to gasoline and grease.

3.0 EXECUTION

3.1 INSTALLATION

A. Install duct accessories according to applicable details in SMACNA's "HVAC Duct Construction Standards - Metal and Flexible" for metal ducts.

B. Install duct accessories of materials suited to duct materials; use galvanized-steel accessories in galvanized.

C. Install volume dampers at points on supply, return, and exhaust systems where branches extend from larger ducts. Where dampers are installed in ducts having duct liner, install dampers with hat channels of same depth as liner, and terminate liner with nosing at hat channel.

D. Set dampers to fully open position before testing, adjusting, and balancing.

E. Install test holes at fan inlets and outlets and elsewhere as indicated.

F. Install flexible connectors to connect ducts to equipment. Outdoor flexible connectors will be covered by a 6” wide galvanized sheet metal covering over the top and vertical sides.

G. Flexible duct shall not be used as a fitting. All fitting shall be galvanized ductwork.

H. Connect diffusers or grilles to ducts with maximum 60-inch lengths of flexible duct clamped or strapped in place.

I. Connect flexible ducts to metal ducts with draw bands.

J. Install duct test holes where required for testing and balancing purposes.

3.2 FIELD QUALITY CONTROL

A. Tests and Inspections:

1. Operate dampers to verify full range of movement.

2. Inspect turning vanes for proper and secure installation.

END OF SECTION

SECTION 23 37 13 – DIFFUSERS & GRILLES

1.0 GENERAL

1.1 SUMMARY

A. Section Includes:

1. Square ceiling diffusers.
2. Perforated grilles

1.2 SUBMITTAL

A. Product Data: For each type of product indicated.

2.0 PRODUCTS

2.1 GENERAL

A. Basis-of-Design Product: Subject to compliance with requirements, provide Titus or comparable product by one of the following:

1. Anemostat Products; a Mestek company.
2. METALAIRE, Inc.
3. Nailor Industries Inc.
4. Price Industries.
5. Tuttle & Bailey.

2.2 CEILING DIFFUSERS

A. Square Ceiling Diffusers:

1. Material: Steel or Aluminum.
2. Finish: Baked enamel, white
3. Face Style: Plaque.
4. Mounting: T-bar.
5. Pattern: Fixed.
6. Dampers: Radial opposed blade.

2.3 CEILING GRILLE

A. Perforated Grille:

1. Material: Steel backpan and pattern controllers, with steel or aluminum face.
2. Finish: Baked enamel, white.
3. Face Size: 24 by 24 inches.

4. Face Style**:** Flush.
5. Mounting: T-bar.
6. Dampers: Radial opposed blade

2.4 SOURCE QUALITY CONTROL

A. Verification of Performance: Rate diffusers, registers, and grilles according to ASHRAE 70, "Method of Testing for Rating the Performance of Air Outlets and Inlets."

3.0 EXECUTION

3.1 INSTALLATION

A. Install diffusers and grilles level and plumb.

B. Ceiling-Mounted Outlets and Inlets: Drawings indicate general arrangement of ducts, fittings, and accessories. Air outlet and inlet locations have been indicated to achieve design requirements for air volume, noise criteria, airflow pattern, throw, and pressure drop. Make final locations where indicated, as much as practical. For units installed in lay-in ceiling panels, locate units in the center of panel. Where architectural features or other items conflict with installation, notify Architect for a determination of final location.

C. Install diffusers and grilles with airtight connections to ducts and to allow service and maintenance of dampers, air extractors, and fire dampers.

3.2 ADJUSTING

A. After installation, adjust diffusers and grilles to air patterns indicated, or as directed, before starting air balancing.

END OF SECTION

SECTION 23 74 33 – PACKAGED HEAT PUMP UNIT

1.0 GENERAL

1.1 RELATED DOCUMENTS

A. Drawings and general provisions of the Contract, including General and Supplementary Conditions and Division 01 Specification Section, apply to this Section.

1.2 DESCRIPTION OF WORK

A. Consult all other Sections, determine the extent and character of related work and properly coordinate work specified herein with that specified elsewhere to produce a complete, finished and workman-like installation. Work under this section includes all labor, equipment, material, services, transportation, etc. required for any reasonably incidental to the complete and satisfactory installation of the HVAC Systems as indicated on the Drawings or specified herein.

1. Package Heat Pump Units
2. Controls

B. Related work specified elsewhere:

1. Section 23 05 48 “Noise Attenuation”
2. Section 23 05 53 “Identification for HVAC”
3. Section 23 05 93 “Testing, Adjusting & Balancing HVAC”
4. Section 23 07 13 “Duct Insulation”
5. Section 23 31 13 “Metal Ducts”
6. Section 23 33 00 “Air Duct Accessories”
7. Section 23 37 13 “Diffusers & Grilles”

1.3 GENERAL REQUIREMENTS

A. This section of the specification shall be considered as a part of the entire specification and all applicable portions of General Conditions, Special Conditions, and Division 1 shall apply.

B. Erection: The Contractor shall furnish the services of an experienced superintendent, who shall be constantly in charge of the erection of the work, together with all necessary journeymen, helpers, and laborers required to properly unload, erect, connect, adjust, start of operate and test the work involved.

1.4 REFERENCES

A. AABC - National Standards for Field Measurement and Instrumentation, Total System Balance.

B. AMCA 210 - Laboratory Methods of Testing Fans for Rating Purposes.

C. AMCA 300 - Test code for sound rating air-moving devices.

D. ANSI/NFPA 90A - Installation of Air Conditioning and Ventilation System.

E. ARI 270 - Sound rating of Outdoor Unitary Equipment.

F. ASHRAE 52-76 - Method of Testing Air Cleaning Devices Used in General Ventilation for Removing Particulate Matter.

G. SMACNA - Low Pressure Duct Construction Standards.

H. California Mechanical Code - 2016 Edition.

1.5 SUBSTITUTIONS

A. Should the Contractor desire to substitute any material, equipment or other items for those specified, he shall submit a complete list, including detailed equipment layouts and performance characteristics within 35 calendar days after the scheduled Start of Construction. Said data shall be submitted in 7 copies, assembled in individual brochures.

B. The entire cost of all changes of any type due to substitution for materials specified shall be borne by the Contractor at no extra cost to the District.

C. Unsolicited and voluntary deducts, on the part of the Contractor for substituting unapproved systems and/or equipment, shall not be considered for the purpose of awarding the Contract.

D. The contractor shall submit the amount of cost credit to the Contract in the event the proposed substitution is accepted.

E. In all cases where substitutions are proposed after bids are received, the Contractor shall bear the cost of evaluation on the basis of 2-1/2 times technical salaries of engineering personnel involved.

1.6 AVAILABILITY OF SPECIFIED EQUIPMENT

A. Verify prior to bidding that all specified equipment is available and can be obtained in time for installation during orderly and timely progress of the work.

B. In the event that specified items will not be so available, notify the Architect prior to receipt of bids

C. Costs of delays because of non-availability of specified items, when such delays could have been avoided by proper investigation on the part of the Contractor, will be back-charged as necessary and shall not be borne by the Owner.

1.7 OPERATION AND MAINTENANCE DATA

A. Submit two sets prior to final inspection, bound in 8-1/2 x 11-inch text pages, binders with durable plastic covers. Prepare binder covers with printed title "OPERATION AND MAINTENANCE INSTRUCTIONS", and title of project. Internally subdivide the binder contents with permanent page dividers, logically organized as described below; with tab titling clearly printed under reinforced laminated plastic tabs.

B. Contents: Prepare a Table of Contents with each Product or system description identified.

1. Part 1: Directory listing names, addresses, and telephone numbers of District, Contractor, Sub-contractors, and major equipment suppliers.
2. Part 2: Operation and maintenance instructions, arranged by system. Identify the following:

a. Significant design criteria.

b. List of equipment.

c. Parts list for each component.

d. Operating instructions.

e. Maintenance instructions for equipment and systems.

f. Maintenance instructions for special finishes, including recommended cleaning methods and materials and special precautions identifying detrimental agents.

C. Submit one copy of completed volumes in final form 15 days prior to final inspection. This copy will be returned after final inspection, with District comments. Revise content of documents as required prior to final submittal.

D. Submit final volumes (revised) within ten days after final inspection.

1.8 GUARANTEES

A. The Contractor, in accepting this contract, binds himself to replace or repair at his own expense any defect in workmanship or material which may appear within a period of two (2) years from the date of the final acceptance of the building, and to pay for all resulting damage which shall appear within the said period; provided always that the Contractor shall not be liable for anything attributable to acts of the

agents of the District, or for ordinary wear. Also, given date of work performed by the Contractor be accepted as complete, he shall agree to correct any deficiencies or omissions in respect to the plans or specifications which may appear in the afore-mentioned twenty-four-month period.

B. The Contractor guarantees that all piping as provided in this specification will be free from all obstructions, and that all piping will be tight and drip free.

C. All refrigerant compressors shall carry a five-year manufacturer's warranty.

1.9 LOCAL CONDITIONS

A. The Contractor and trade submitting tenders on this work shall visit and will be deemed to have visited the site to ensure that they are familiar with all conditions relating to the work. Failure to visit the site will in no way relieve the successful Contractor of the necessity of furnishing any material or performing any work that may be required to complete the work in accordance with the drawings and specifications without additional cost to the Owner.

1.10 RULES, REGULATIONS AND CODES

A. All work and materials shall be in full accordance with the latest California Mechanical Code, California Plumbing Code, California Building Code and local rules and regulations, State Fire Marshal regulations, the safety orders of the Division of Industrial Safety; the National Electric Code; the standards of the National Fire Protection Association; American Gas Association; Occupation and Safety Act; American National Standards Institute; American Society of Mechanical Engineers; American Society for Testing and Materials; Installation Standards published by the International Association of Plumbing And Mechanical officials (IAPMO) and other applicable laws, codes, or regulations. Nothing in these specifications shall be construed to permit work not conforming to these codes.

B. Electrical Work: Motors, electrical apparatus and wiring specified in this section shall conform to the National Electrical Manufacturer's Standards and the National Electric Code and bear the Underwriter's label of approval.

C. The Contractor shall furnish, without extra charge, any additional material and labor when and where required to comply with these rules and regulations, though the work be not mentioned in these Specifications or shown on the Drawings. When these Specifications or Drawings call for or describe materials or construction of a better quality or larger sizes than required by the above-mentioned rules and regulations, the provisions of these specifications and accompanying drawings shall take precedence.

1.11 FEES AND PERMITS

A. The Contractor must obtain and pay all fees for permits, licenses, inspections, etc., which are required by any legally constituted authority. Coordinate exact requirements with the Architect prior to bid.

1.12 COORDINATION

A. Following the general arrangement indicated on the Drawings as closely as possible, the Contractor shall coordinate with the architectural, structural, plumbing, electrical and all other trades prior to installation of the materials and equipment to verify adequate space available for installation of the work shown. The District shall be immediately notified if an area of conflict occurs between trades.

B. The Contractor shall bear all costs incurred for work that must be relocated due to conflicts between trades.

C. The Mechanical Contractor shall coordinate all requirements for all points of connection with the General Contractor and other trades prior to bid.

1.13 DRAWINGS

A. The work shall be installed as indicated on Drawings, however, changes to accommodate installation of this work with other work, or in order to meet Architectural or structural conditions, shall be made without additional cost to the District.

B. For the purpose of clarity and legibility, the Drawings are essentially diagrammatic to the extent that many offsets, bends, unions, special fittings and exact locations are not indicated. The Contractor shall make use of all data in all of the Contract Documents and shall verify this information at the site.

1.14 INSPECTION

A. The Contractor shall not allow or cause any of his work to be covered up or closed in until it has been inspected, tested, approved by all authorities have jurisdiction, and until Project Record drawings have been properly annotated.

B. Should any of his work be covered up or closed in before such inspection, he shall, at his own expense, uncover the work to the satisfaction of the inspection party. All related repair work cost shall be borne by the Contractor.

1.15 DELIVERY, STORAGE AND PROTECTION OF PROPERTY

A. Place orders for all equipment in time to prevent any delay in construction schedule or completion of project. If any materials or equipment are not ordered in time, additional charges made by equipment manufacturers to complete their equipment

in time to meet construction schedule, together with any special handling charges, shall be borne by the contractor.

B. Materials shall be delivered in ample quantities from time to time as may be necessary for the uninterrupted progress of the work. They shall be stored as to cause the least obstruction to the premises and distributed to prevent overloading to any portion of the structure.

C. The Contractor shall provide temporary storage and shop areas that are required at the site for the safe and proper storage of materials, tools, and other items used in the performance of this work. These areas shall be constructed only in approved locations and shall not interfere with the work of any other Contractor.

D. All work, equipment and materials shall always be protected. The Contractor shall make good all damage caused either directly or indirectly by their own workmen. The Contractor shall also protect their own work from damage. They shall close all duct openings with caps or plugs during installation. Also protect all of their equipment and materials against dirt, water, chemical, and mechanical injury. Upon completion, all work shall be thoroughly cleaned and delivered in a new condition.

1.16 ACCESS TO EQUIPMENT FOR MAINTENANCE

A. Install all equipment, piping, etc. to permit access for normal maintenance. Maintain easy access to filters, motors, etc. Install all such equipment and accessories to facilitate maintenance. Perform any relocation of pipes, etc. required to permit access at request of Owner at no additional cost.

2.0 PRODUCTS

2.1 PACKAGE ROOFTOP HEAT PUMP UNITS

A. General:

1. Provide roof-mounted units, electrically controlled heating and cooling unit utilizing fully scroll hermetic compressors.
2. Units shall be of ultra-high cooling efficiency and utilize Puron (R-410A) refrigerant.
3. Unit shall be factory assembled, single piece heating and cooling unit. Contained within the unit enclosure shall be all factory wiring, piping, controls, refrigerant charge and special features required prior to field start-up.

B. Quality Assurance

1. Unit meet ASHRAE 90.1-2007 minimum efficiency requirements.
2. Unit shall be rated in accordance with AHRI Standards 340 and 360.

3. Unit shall be designed to conform to ASHRAE 15.
4. Unit shall be ETL--tested and certified in accordance with ANSI Z21.47 Standards and ETL--listed and certified
5. Galvanized steel, channel frame with gaskets, nailer strips.
6. Insulation and adhesive shall meet NFPA 90A requirements for flame spread and smoke generation.
7. Unit casing shall be capable of withstanding 500-hour salt spray exposure per ASTM B117 (scribe specimen).
8. Unit shall be manufactured in a facility registered to ISO 9001:2000.
9. Each unit shall be subjected to a completely automated run testing on the assembly line.

C. Unit cabinet:

1. Unit cabinet shall be constructed of galvanized steel and shall be bonderized and coated with a baked enamel finish on all externally exposed surfaces.
2. Unit cabinet exterior paint shall be: film thickness, (dry) 0.003 inches minimum, gloss (per ASTM D523, 60_F): 60, Hardness: H--2H Pencil hardness.
3. Evaporator fan compartment interior cabinet insulation shall conform to AHRI Standards 340/360 minimum exterior sweat criteria. Interior surfaces shall be insulated with a minimum 1/2--in. thick, 1 lb density, flexible fiberglass insulation, neoprene coated on the air side. Aluminum foil--faced fiberglass insulation shall be used in the heat compartment.
4. Base of unit shall have a minimum of four locations for factory thru--the--base electrical connections. Connections shall be internal to the cabinet to protect from environmental issues.
5. Base Rail
    a. Unit shall have base rails on a minimum of 2 sides.
    b. Holes shall be provided in the base rails for rigging shackles to facilitate maneuvering and overhead rigging.
    c. Holes shall be provided in the base rail for moving the rooftop by fork truck.
    d. Base rail shall be a minimum of 16-gauge thickness.
6. Condensate pan and connections:
    a. Shall be a sloped condensate drain pan made of a non-corrosive material.

b. Shall comply with ASHRAE Standard 62.

c. Shall use a 3/4--in --14 NPT drain connection at the end of the drain pan. Connection shall be made per manufacturer's recommendations.

7. Top panel:

a. Shall be a multi--piece top panel linked with water tight flanges and interlocking systems.

8. Electrical Connections

a. All unit power wiring shall enter unit cabinet at a single, factory--prepared, knockout location.

9. Component access panels (standard)

a. Cabinet panels shall be easily removable for servicing.

b. Unit shall have one factory installed, tool--less, removable, filter access panel.

c. Panels covering control box and filters shall have molded composite handles while the blower access door shall have an integrated flange for easy removal.

d. Handles shall be UV modified, composite. permanently attached and recessed into the panel.

e. Screws on the vertical portion of all removable access panel shall engage into heat resistant, molded composite collars.

f. Collars shall be removable and easily replaceable using manufacturer recommended parts.

D. Fans:

1. Indoor blower (evaporator fan):

a. Centrifugal supply air fan blower shall have rubber-isolated, cartridge type ball bearings or pillow-block ball bearings and adjustable belt drive.

b. Fan wheel shall be made from steel with a corrosion resistant finish. It shall be a dynamically balanced, double-inlet type with forward-curved blades.

c. The indoor fan system (blower wheels, motors, belts, and both bearings) shall slide out for easy access.

d. Fan motors shall be continuous operation, open drip-proof. Bearings shall be sealed, permanently lubricated ball-bearing type for longer life and lower maintenance.

2. Condenser Fan: Shall be of the direct-driven propeller type, with corrosion-resistant aluminum blades riveted to corrosion-resistant steel support. They shall be totally enclosed, thermally protected, and be of a shaft down design.
3. Induced-draft blower shall be of the direct-driven, single inlet, forward curved, centrifugal type. It shall be made from aluminized steel with a corrosion-resistant finish and shall be dynamically balanced.

E. Compressor(s):

1. Unit shall use one fully hermetic, scroll compressor for each independent refrigeration circuit.
2. Models shall be available with 2 compressor/2 stage cooling.
3. Compressor motors shall be cooled by refrigerant gas passing through motor windings.
4. Compressors shall be internally protected from high discharge temperature conditions.
5. Compressors shall be protected from an over--temperature and over--amperage conditions by an internal, motor overload device.
6. Compressor shall be factory mounted on rubber grommets.
7. Compressor motors shall have internal line break thermal, current overload and high-pressure differential protection.
8. Crankcase heaters shall be provided by the factory.

F. Coils:

1. Standard evaporator coils shall have aluminum lanced plate fins mechanically bonded to seamless internally grooved copper tubes with all joints brazed.
2. Dual circuit shall have face-split type evaporator coils.
3. Condenser coils shall be continuous slab design to facilitate easy coil cleaning.
4. Coils shall be leak tested at 170 psig and pressure tested at 1875 psig.
5. Condenser Coils: Provide Thermoguard™ non VOC coating. Corrosion durability shall be confirmed through testing to be no less than 1000 hours salt spray per ASTM B117-90. Coil construction shall be aluminum or copper-fins mechanically bonded to copper tubes. Thermoguard™ coated aluminum or copper-fin coils shall provide protection in industrial and industrial and costal combined environments. Provide 10-year coating protection warranty.

G. Refrigerant circuit shall include the following control, safety, and maintenance features:

a. Thermostatic Expansion Valve (TXV) shall help provide optimum performance across the entire operating range. Shall contain removable power element to allow change out of power element and bulb without removing the valve body.

b. High capacity refrigerant filter drier on each refrigerant circuit.

c. Service gauge connections on suction and discharge lines.

d. Pressure gauge access through a specially designed screen on the side of the unit.

e. Precision--sized suction line accumulator on each refrigerant circuit shall protect from oil being removed from the scroll compressor rotating orbiter and plate during the activation of the defrost mode and switching back and forth from cooling and heating operations.

H. Filter Section:

1. Standard filter section shall consist of factory-installed 2-in. thick, MERV 8, pleated filters and shall be on a dedicated slide out track to easily facilitate access and replacement.
2. Filter section shall use standard size filters and be of common sizes within cabinet sizes.

I. Safeties:

1. Compressor over--temperature, over current.
2. Loss of charge switch.

a. Units with 2 compressors shall have different sized connectors for the circuit 1 and circuit 2 loss of charge switches. They shall physically prevent the cross-wiring of the safety switches between circuits 1 and 2.

b. Loss of charge switch shall use different color wire than the high-pressure switch. The purpose is to assist the installer and service technician to correctly wire and or troubleshoot the rooftop unit.

3. High pressure switch

a. Units with 2 compressors shall have different sized connectors for the circuit 1 and circuit 2 high pressure switches. They shall physically prevent the cross-wiring of the safety switches between circuits 1 and 2.

b. High pressure switch shall use different color wire than the low-

pressure switch. The purpose is to assist the installer and service technician to correctly wire and or troubleshoot the rooftop unit.

4. Freeze protection thermostat, evaporator coil.
5. Automatic reset, motor thermal overload protector. Supply air sensor shall be located in the unit and detect both heating and cooling operation.

J. Operating Characteristics:

1. Unit shall be capable of starting and running at 125^0F ambient outdoor temperature per maximum load criteria of ARI Standard 210 sizes and 360 sizes.
2. Unit shall be provided with fan time delay to prevent cold air delivery in heating mode.

K. Electrical Requirements: All unit power wiring shall enter cabinet at a single location through bottom.

L. Motors:

1. Compressor motors shall be cooled by refrigerant gas passing through motor windings and shall have line break thermal and current overload protection.
2. Evaporator fan motor shall have permanently lubricated, sealed bearings and inherent automatic-reset thermal overload protection or manual reset calibrated circuit breakers. Evaporator motors are designed specifically for Carrier and do not have conventional horsepower (HP) ratings listed on the motor nameplate. Motors are designed and qualified in the "air-over" location downstream of the cooling coil and carry a maximum continuous bhp rating that is the maximum application bhp rating for the motor; no "safety factors" above that rating may be applied.
3. Totally enclosed condenser-fan motor shall have permanently lubricated, sealed bearings, and inherent automatic-reset thermal overload protection.
4. Induced-draft motor shall have permanently lubricated sealed bearings, and inherent automatic-reset thermal overload protection.

M. Special Features:

1. Integrated air Economizer (See schedule):

    a. Tilt-out economizer shall be furnished and installed complete with outside air dampers and controls.

    b. Low-leakage damper, opposing, gear-driven dampers with UL gears.

    c. Capable of introducing up to 100% outdoor air for minimum ventilation as well as free cooling.

d. Damper actuator shall be electronic 4 to 20 mA / 2 to 10 vDC fully modulating design.

e. Economizer outdoor hood shall be pre-painted and fully assembled on 3-14 size. Economizer outdoor hood requires field assembly on the other sizes.

f. Economizer shall be available for either field or factory installation.

2. Differential Temperature sensor:

a. For use with air economizer only.

b. Capable of comparing heat content (temperature) of outdoor air and indoor air and controlling economizer cut-in point at the most economical level.

3. Non-fused disconnect Switch: Shall be factory-installed, internally mounted, NEC and UL approved. Non-fuse switch shall provide unit power shutoff. Shall be accessible from outside the unit and shall provide power off lockout capability.

4. HACR Circuit Breaker: Shall be factory-installed, internally mounted, NEC and UL approved. HACR breaker shall provide unit power shutoff. Shall be accessible from outside the unit and shall provide power off lockout capability.

5. Fan Status: The fan status switch shall be a pressure switch and will indicate indoor fan operation. The switch shall be available as field or factory-installed.

6. Mid-Low Fan Performance Motor/Drive: This motor/drive option shall provide low to medium motor and drive capability to enhance evaporator fan performance.

7. Phase Loss Protection: Shall provide shutdown when an electrical phase loss is detected.

2.2 CONTROLS

A. Refer to drawings for integration into existing Johnson Controls Energy Management System (EMS).

B. The Mechanical Contractor shall be responsible for the proper coordination of all control work and electrical work in connection therewith. Contractor shall also be responsible for the proper operation of the entire new system.

C. The Electrical Contractor shall furnish and install all line voltage control wiring, and all conduit. Wire sizing and length of run shall be coordinated with the manufacturer and Electrical Engineer. All EMS controls, wiring, and conduit shall be by EMS contractor.

D. Electrical Work: All electric relays, hand-off automatic switches and all electrical wiring and all conduit will be provided under the Electrical Section, except as otherwise specified. Furnish and install additional conduit, wiring, relays, and hand-off-automatic switches made necessary by the use of approved substituted equipment under this Section with no additional cost to the Owner.

E. Refer to drawings for control diagrams and additional requirements.

F. Calibration of Controls: The EMS Contractor shall carefully calibrate and adjust all controls as required to maintain comfort conditions and maximum energy conservation.

G. EMS Thermostats shall be by the EMS contractor and shall part of an energy management system unless specified otherwise.

H. EMS Contractor shall integrate new system into the JCI front end. Heat pump units shall be graphically displayed and will display all monitored points as listed on drawings.

3.0 EXECUTION

3.1 GENERAL

A. Install all equipment in locations indicated on the Drawings. Contractor will be responsible to verify with the District, if suitability is doubted. Contractor shall notify the District before installation into any apparent improper locations of interference with other work such as electrical outlets, windows, cabinetwork or other features.

3.2 INSPECTION

A. Roof-top equipment: Install in accordance with manufacturer's instructions. Mount units on factory-built roof-mounting frame providing watertight enclosure to protect ductwork and utility services, or on platforms. Install roof mounting frame level.

B. Verify that the mechanical system may be installed in complete accordance with all pertinent codes and regulations and the approved shop drawings.

3.3 INSTALLATION OF EQUIPMENT

A. Install all equipment in the locations indicated on the drawings.

B. Avoid interference with structure and with work of other trades, preserving adequate headroom and clearing all doors and passageways.

C. Check each piece of equipment in the system for defects, verifying that all parts are properly furnished and installed, that all items function properly and that all adjustments have been made.

D. All mechanical equipment (fans, ductwork, piping, etc.) shall be isolated from the building structure by means of noise and vibration isolators. No rigid contact shall be allowed between pipes or ducts and building structures or support frames.

E. The gaps between penetrating elements, ductwork, piping and the walls of the holes shall be filled on all sides with resilient material and sealed air tight on each wall with non-hardening sealant. Provide sheet metal and collar at all exposed ductwork penetrations. Duct collar shall cover the annular space around the duct with a minimum 1” overlap.

F. Fabricate, with steel, special mounting brackets as required to clear other equipment, doors and to span for best structural support of mechanical.

G. All duct connections to mechanical equipment shall be made with flexible connectors.

H. Install equipment so that nameplates are easily visible.

I. Where not otherwise indicated, equipment and material installation as published per manufactures' recommendations. This requirement includes details, clearances and accessories.

3.4 CUTTING, PATCHING AND DAMAGE

A. All necessary cutting and patching of walls, floors, partitions, ceilings, etc., as required for the proper installation of work under this section shall be done under this section. No cutting of structural members will be permitted without the written permission of the Architect.

B. Any existing work or equipment damaged during the progress of construction or testing shall be replaced with like material, free of charge to the Owner or other trades.

3.5 DISCREPANCIES

A. In the event of discrepancy, immediately notify the Architect.

B. Do not proceed with the installation in areas of discrepancies until all such discrepancies have been fully resolved.

3.6 FILTERS

A. Do not operate air supply system unless filters are installed, including temporary pre-filters for use during construction. If not used, deliver the spare set to the Owner at the time of acceptance.

B. Install new filters at final inspection concurrently with turn over to Owner.

3.7 AIR BALANCING

A. Refer to Section 23 05 93.

3.8 SOUND AND VIBRATION ISOLATION

A. All vibrating equipment shall be sound isolated from the structure.

B. The Contractor shall submit all necessary data for each vibration isolator, including static deflection and weight loading, for equipment in operation.

C. All vibrating equipment shall be provided with flexible pipe connections. Submit for approval prior to installation.

3.9 CLEANING

A. Completely cover motor and other moving machinery to protect from dirt and water during construction. Cap all openings into ducts and pipes to protect from foreign matter while under construction.

B. During the process of work, premises shall be kept reasonably free of all debris, cuttings and waste material resulting from work under this heading. All debris, rubbish, leftover material tools and equipment shall be removed from the site prior to final acceptance.

C. Thoroughly clean all parts of apparatus and equipment. Exposed parts which will be painted shall be thoroughly cleaned of cement, plaster and other materials. All grease or oil spots shall be removed with carbon tetrachloride. Such surfaces shall be carefully brushed down with a wire brush to remove rust and other spots and left smooth and clean.

D. Damaged factory applied finished shall be “touched up”. “Touched up” shall be accomplished with preparation, prime and finish coats applied in strict accordance with manufactures recommendations.

3.10 EQUIPMENT IDENTIFICATION AND OPERATION INSTRUCTIONS

A. Furnish the Owner with a hard-bound brochure titled “Mechanical System” which shall contain the following information typed, indexed, tabbed and bound inside:

1. An alphabetical list of all equipment excepting pipe and fittings: the manufacture; the catalog number; and the local distributing agent, including his address and telephone number.
2. Manufacturer's instructions for all items requiring maintenance. This shall include, but not be limited to, all motor driven equipment, controls, pressure regulating devices, packaged equipment, etc. Where manufacturer's directions are not clear, are incomplete or do not exist, develop information necessary to service, clean, adjust, etc., all items. Delete all information in manufacturer's literature, which is not applicable. Identify all equipment in the manual. List the time intervals that all maintenance tasks should be performed.
3. Submit three (3) copies of the brochure to the Architect for approval and furnish the Owner with at least two (2) corrected brochures.
4. Provide for and fasten to each piece of equipment a permanent name plate fabricated of engraved laminated plastic, white between black laminations, indicating the identifying mark and the area or spaces served by the equipment.

END OF SECTION

Division 26:
Electrical

SECTION 260500 - GENERAL ELECTRICAL REQUIREMENTS

PART 1 – GENERAL

1.1 Description of Work:

A. The work of this Section consists of providing all required labor, supervision, materials and equipment to satisfactorily complete all electrical installations that are shown on the Drawings, included in these specifications, or otherwise needed for a complete and fully operating facility.

B. Furnish and install all required in-place equipment, conduits, conductors, cables and any miscellaneous materials for the satisfactory interconnection and operation of all associated electrical systems.

1.2 Related Work:

A. This Section provides the basic Electrical Requirements which supplement the General Requirements of Division 01 and apply to all Sections of Division 26.

1.3 Submittals:

A. As specified in Division 01. Submit to the Architect shop drawings, manufacturer's data and certificates for equipment, materials and finish, and pertinent details for each system specified. Information to be submitted includes manufacturer's descriptive literature of cataloged products, equipment, drawings, diagrams, performance and characteristic curves as applicable, test data and catalog cuts. Obtain written approval before procurement, fabrication, or delivery of the items to the job site. Partial submittals are not acceptable and will be returned without review. Furnish manufacturer's name, trade name, catalog model or number, nameplate data, size, layout dimensions, capacity, project specification and paragraph reference, applicable Federal, Industry and Technical Society Publication References, and years of satisfactory service of each item required to establish contract compliance. Photographs of existing installations and data submitted in lieu of catalog data are not acceptable and will be returned without approval.

B. Organize submittals for equipment and items related to each specification section together as a package.

C. Proposed substitutions of products will not be reviewed or approved prior to awarding of the Contract.

D. Substitutions shall be proven to the Architect or Engineer to be equal or superior to the specified product. Architect’s decision is final. The Contractor shall pay all costs

incurred by the Architect and Engineer in reviewing and processing any proposed substitutions whether or not a proposed substitution is accepted.

E. If a proposed substitution is rejected, the contractor shall furnish the specified product at no increase in contract price.

F. If a proposed substitution is accepted, the contractor shall be completely responsible for all dimensional changes, electrical changes, or changes to other work which are a result of the substitution. The accepted substitution shall be made at no additional cost to the owner or design consultants.

1.4 Quality Assurance:

A. Codes: All electrical equipment and materials, including installation and testing, shall conform to the latest editions following applicable codes:

1. California Electrical Code (CEC).

2. Occupational Safety and Health Act (OSHA) standards.

3. All applicable local codes, rules and regulations.

4. Electrical Contractor shall possess a C-10 license and all other licenses as may be required. Licenses shall be in effect at start of this contract and be maintained throughout the duration of this contract.

B. Variances: In instances where two or more codes are at variance, the most restrictive requirement shall apply.

C. Standards: Equipment shall conform to applicable standards of American National Standards Institute (ANSI), Electronics Industries Association (EIA), Institute of Electrical and Electronics Engineers (IEEE), and National Electrical Manufacturers Association (NEMA).

D. Underwriter Laboratories (UL) listing is required for all equipment and materials where such listing is offered by the Underwriters Laboratories. Provide service entrance labels for all equipment required by the NEC to have such labels.

E. The electrical contractor shall guarantee all work and materials installed under this contract for a period of one (1) year from date of acceptance by owner.

F. All work and materials covered by this specification shall be subject to inspection at any and all times by representatives of the owner. Work shall not be closed in or covered before inspection and approval by the owner or his representative. Any material found not conforming with these specifications shall, within 3 days after being notified by the owner, be removed from premises; if said material has been installed,

entire expense of removing and replacing same, including any cutting and patching that may be necessary, shall be borne by the contractor.

1.5 Contract Documents:

A. Drawings and Specifications:

1. In the case of conflict between the drawings and specifications, the specifications shall take precedence.

2. Drawings and specifications are intended to comply with all law, ordinances, rules and regulations of constituted authorities having jurisdiction, and where referred to in the Contract Documents, said laws, ordinance, rules and regulations shall be considered as a part of said Contract Documents within the limits specified. The Contractor shall bear all expenses of correcting work done contrary to said laws, ordinance, rules and regulations if the Contractor knew or should have known that the work as performed is contrary to said laws, ordinances, rules and regulations and if the Contractor performed same (1) without first consulting the Architect for further instructions regarding said work and/or (2) disregarded the Architect's instructions regarding said work.

B. Drawings: The Electrical Drawings shall govern the general layout of the completed construction.

1. Locations of equipment, panels, pullboxes, conduits, stub-ups, ground connections are approximate unless dimensioned; verify locations with the Architect prior to installation.

2. Review the Drawings and Specification Divisions of other trades and perform the electrical work that will be required for those installations.

3. Should there be a need to deviate from the Electrical Drawings and Specifications, submit written details and reasons for all changes to the Architect for approval.

4. The general arrangement and location of existing conduits, piping, apparatus, etc., is approximate. The drawings and specifications are for the assistance and guidance of the contractor, exact locations, distances and elevations are governed by actual field conditions. Accuracy of data given herein and on the drawings is not guaranteed. Minor changes may be necessary to accommodate work. The contractor is responsible for verifying existing conditions. Should it be necessary to deviate from the design due to interference with existing conditions or work in progress, claims for additional compensation shall be limited to those for work required by unforeseen conditions as determined by the Architect.

5. All drawings and divisions of these specifications shall be considered as whole. The contractor shall report any apparent discrepancies to the Architect prior to submitting bids.

6. The contractor shall be held responsible to have examined the site and compared it with the specifications and plans and to have satisfied himself as to the conditions under which the work is to be performed. He shall be held responsible for knowledge of all existing conditions whether or not accurately described. No subsequent allowance shall be made for any extra expense due to failure to make such examination.

1.6 Closeout Submittals:

A. Manuals: Furnish manuals for equipment where manuals are specified in the equipment specifications or are specified in Division 01.

1.7 Coordination:

A. Coordinate the electrical work with the other trades, code authorities, utilities and the Architect.

B. The Electrical Contractor shall schedule all utility work necessary for utility inspections, connections, cable installation, etc. for the new electrical service to meet the construction schedule.

C. Utility Company charges shall be paid by the Owner.

D. Contractor shall pay all inspection and other applicable fees and procure all permits necessary for the completion of this work.

E. Where connections must be made to existing installations, properly schedule all the required work, including the power shutdown periods.

F. When two trades join together in an area, make certain that no electrical work is omitted.

1.8 Job Conditions:

A. Operations: Perform all work in compliance with Division 01.

1. Keep the number and duration of power shutdown periods to a minimum.

2. Show all proposed shutdowns and their expected duration on the construction schedule. Schedule and carry out shutdowns so as to cause the least disruption to operation of the Owner's facilities.

3. Carry out shutdown only after the schedule has been approved, in writing, by the owner. Submit power interruption schedule 15 days prior to date of interruption.

B. Storage: Provide adequate storage for all equipment and materials which will become part of the completed facility so that it is protected from weather, dust, water, or construction operations.

1.9 Damaged Products:

A. Notify the Architect in writing in the event that any equipment or material is damaged. Obtain approval from the Architect before making repairs to damaged products.

1.10 Locations:

A. General: Use equipment, materials and wiring methods suitable for the types of locations in which they are located.

B. Dry Locations: All those indoor areas which do not fall within the definition below for Wet Locations and which are not otherwise designated on the Drawings.

C. Wet Locations: All locations exposed to the weather, whether under a roof or not, unless otherwise designated on the Drawings.

1.11 Safety and Indemnity:

A. The Contractor is solely and completely responsible for conditions of the job site including safety of all persons and property during performance of the work. This requirement will apply continually and not be limited to normal working hours. The contractor shall provide and maintain throughout the work site proper safeguards including, but not limited to, enclosures, barriers, warning signs, lights, etc. to prevent accidental injury to people or damage to property.

B. No act, service, drawing review or construction review by the Owner, the Engineer or their Consultants is intended to include reviews of the adequacy of the Contractors safety measures in or near the construction site.

C. The Contractor performing work under this Division of the Specifications shall hold harmless, indemnify, and defend the Owner, the Engineer, their consultants, and each of their officers, agents and employees from any and all liability claims, losses, or damage arising out of or alleged to arise from bodily injury, sickness, or death of a person or persons and for all damages arising out of injury to or destruction of property arising directly or indirectly out of or in connection with the performance of the work under this Division of the Specifications, and from the Contractor's negligence in the performance of the work described in the construction contract documents, but not

including liability that may be due to the sole negligence of the Owner, the Engineer, their Consultants or their officers, agents and employees.

D. If a work area is encountered that contains hazardous materials, the contractor is advised to coordinate with the owner and it's abatement consultant for abatement of hazardous material by the Owner's Representative. "Hazardous materials" means any toxic substance regulated or controlled by OSHA, EPA, State of California or local rules, regulations and laws. Nothing herein shall be construed to create a liability for Aurum Consulting Engineers regarding hazardous materials abatement measures, or discovery of hazardous materials.

1.12 Access Doors:

A. The contractor shall install access panels as required where floors, walls or ceilings must be penetrated for access to electrical, control, fire alarm or other specified electrical devices. The minimum size panel shall be 14" x 14" in usable opening. Where access by a service person is required, minimum usable opening shall be 18" x 24".

B. All access doors installed lower than 7'-0" above finished floor and exposed to public access shall have keyed locks.

C. Where specific information or details relating to access panels differ from Division 26 paragraph 1.12 of these specifications, or shown on the electrical drawings and details or under other Divisions of work, those requirements shall supersede these specifications.

1.13 Arc Flash:

A. The contractor shall install a clearly visible arc flash warning to the inside door of all panelboards and industrial control panels, as well as to the front of all switchboards and motor control centers that are a part of this project.

B. The warning shall have the following wording: line 1 "WARNING" (in large letters), line 2 "Potential Arc Flash Hazard" (in medium letters), line 3 & 4 "Appropriate Personal Protective Equipment and Tools required when working on this equipment".

PART 2 - PRODUCTS

2.1 Standard of Quality:

A. Products that are specified by manufacturer, trade name or catalog number establish a standard of quality and do not prohibit the use of equal products of other manufacturers provided they are established to be equal to the specified product and approved by the Architect prior to installation.

B. Material and Equipment: Provide materials and equipment that are new and are current products of manufacturers regularly engaged in the production of such products. The standard products shall have been in satisfactory commercial or industrial use for two years prior to bid opening. The two-year period includes use of equipment and materials of similar size under similar circumstances. For uniformity, only one manufacturer will be accepted for each type of product.

C. Service Support: Submit a certified list of qualified permanent service organizations including their addresses and qualification for support of the equipment. These service organizations shall be convenient to the equipment installation and able to render service to the equipment on a regular and emergency basis during the warranty period of the contract.

D. Manufacturer's Recommendations: Where installation procedures are required to be in accordance with manufacturer's recommendations, furnish printed copies of the recommendations prior to installation. Installation of the item shall not proceed until recommendations are received. Failure to furnish recommendation shall be cause for rejection of the equipment or material.

2.2 Nameplates:

A. For each piece of electrical equipment, provide a manufacturer's nameplate showing his name, location, the pertinent ratings, the model designation, and shop order number.

B. Identify each piece of equipment and related controls with a rigid laminated engraved plastic nameplate. Unless otherwise noted, nameplates shall be melamine plastic 0.125 inch thick, white with black center core. Surface shall be matte finish. Corners shall be square. Accurately align lettering and engrave into the core. Minimum size of nameplates shall be 0.5 by 2.5 inches unless otherwise noted. Where not otherwise specified, lettering shall be a minimum of 0.25 inch high normal block style. Engrave nameplates with the inscriptions indicated on the Drawings and, if not so indicated, with the equipment name. Securely fasten nameplates in place using two stainless steel or brass screws.

2.3 Fasteners:

A. Fasteners for securing equipment to walls, floors and the like shall be either hot-dip galvanized after fabrication or stainless steel.

2.4 Finish requirements:

A. Equipment: Refer to each electrical equipment section of these Specifications for painting requirements of equipment enclosures. Repair any final paint finish which has been damaged or is otherwise unsatisfactory, to the satisfaction of the Architect.

B. Wiring System: In finished areas, paint all exposed conduits, boxes and fittings to match the color of the surface to which they are affixed.

PART 3 - EXECUTION

3.1 Workmanship:

A. Ensure that all equipment and materials fit properly in their installation.

B. Perform any required work to correct improperly fit installation at no additional expense to the owner.

C. All electrical equipment and materials shall be installed in a neat and workmanship manner in accordance with the "NECA-1 Standard Practices for Good Workmanship in Electrical Contracting". Workmanship of the entire job shall be first class in every respect.

3.2 Equipment Installations:

A. Provide the required inserts, bolts and anchors, and securely attach all equipment and materials to their supports.

B. Do all the cutting and patching necessary for the proper installation of work and repair any damage done.

C. Earthquake restraints: all electrical equipment, including conduits over 2 inches in diameter, shall be braced or anchored to resist a horizontal force acting in any direction as per CBC Section 1616A Title 24, part 2 and ASCE7-10, Sections 13.3 and 13.6 and Table 13.6-1.

D. Structural work: All core drilling, bolt anchor insertion, or cutting of existing structural concrete shall be approved by a California registered structural consulting engineer prior to the execution of any construction. At all floor slabs and structural concrete walls to be drilled, cut or bolt anchors inserted, the contractor shall find and mark all reinforcing in both faces located by means of x-ray, pach-ometer, or prof-

ometer. Submit sketch showing location of rebar and proposed cuts, cores, or bolt anchor locations for approval.

3.3 Field Test:

A. Test shall be in accordance with Acceptance testing specifications issued by the National Electrical Testing Association (NETA).

B. Perform equipment field tests and adjustments. Properly calibrate, adjust and operationally check all circuits and components, and demonstrate as ready for service. Make additional calibration and adjustments if it is determined later that the initial adjustments are not satisfactory for proper performance. Perform equipment field test for equipment where equipment field tests are specified in the equipment Specifications. Give sufficient notice to the Architect prior to any test so that the tests may be witnessed.

C. Provide instruments, other equipment and material required for the tests. These shall be of the type designed for the type of tests to be performed. Test instrument shall be calibrated by a recognized testing laboratory within three months prior to performing tests.

D. Operational Tests: Operationally test all circuits to demonstrate that the circuits and equipment have been properly installed and adjusted and are ready for full-time service. Demonstrate the proper functioning of circuits in all modes of operation, including alarm conditions.

E. Re-testing will be required for all unsatisfactory tests after the equipment or system has been repaired. Re-test all related equipment and systems if required by the Architect. Repair and re-test equipment and systems which have been satisfactorily tested but later fail, until satisfactory performance is obtained.

F. Maintain records of each test and submit five copies to the Architect when testing is complete. All tests shall be witnessed by the Architect. These records shall include:

1. Name of equipment tested.

2. Date of report.

3. Date of test.

4. Description of test setup.

5. Identification and rating of test equipment.

6. Test results and data.

7. Name of person performing test.

8. Owner or Architect's initials.

G. Items requiring testing shall be as noted in the additional electrical sections of these specifications.

3.4 Cleaning Equipment:

A. Thoroughly clean all soiled surfaces of installed equipment and materials.

3.5 Painting of Equipment:

A. Factory Applied: Electrical equipment shall have factory applied painting system which shall, as a minimum, meet the requirements of NEMA ICS 6 corrosion-resistance test and the additional requirements specified in the technical section.

B. Field Applied: Paint electrical equipment as required to match finish of adjacent surfaces.

3.6 Records:

A. Maintain one copy of the contract Drawing Sheets on the site of the work for recording the "as built" condition. After completion of the work, the Contractor shall carefully mark the work as actually constructed, revising, deleting and adding to the Drawing Sheets as required. The following requirements shall be complied with:

1. Cable Size and Type: Provide the size and type of each cable installed on project.

2. Substructure: Where the location of all underground conduits, pull boxes, stub ups and etc. where are found to be different than shown, carefully mark the correct location on the Drawings. Work shall be dimensioned from existing improvements.

3. Size of all conduit runs.

4. Routes of concealed conduit runs and conduit runs below grade.

5. Homerun points of all branch circuit.

6. Location of all switchgear, panels, MCC, lighting control panels, pullcans, etc.

7. Changes made as a result of all approved change orders, addendums, or field authorized revisions.

8. As Builts: At the completion of the Work the Contractor shall review, certify, correct and turn over the marked up Drawings to the Architect for his use in preparing "as built" plans.

9. As built Drawings shall be delivered to the Architect within ten (10) days of completion of construction.

3.7 Clean Up:

A. Upon completion of electrical work, remove all surplus materials, rubbish, and debris that accumulated during the construction work. Leave the entire area neat, clean, and acceptable to the Architect.

3.8 Mechanical and Plumbing Electrical Work:

A. The requirements for electrical power and/or devices for all mechanical and plumbing equipment supplied and/or installed under this Contract shall be coordinated and verified with the following:

1. Mechanical and Plumbing Drawings.
2. Mechanical and Plumbing sections of these Specifications.
3. Manufacturers of the Mechanical and Plumbing equipment supplied.

B. The coordination and verification shall include the voltage, ampacity, phase, location and type of disconnect, control, and connection required. Any changes that are required as a result of this coordination and verification shall be a part of this Contract.

C. The Electrical Contractor shall furnish and install the following for all mechanical and plumbing equipment:

1. Line voltage conduit and wiring.
2. Disconnect switches.
3. Manual line motor starters.

D. Automatic line voltage controls and magnetic starters shall be furnished by the Mechanical and/or Plumbing Contractor and installed and connected by the Electrical Contractor. When subcontracted for by the Mechanical and/or Plumbing Contractor, all line voltage control wiring installed by the Electrical Contractor shall be done per directions from the Mechanical and/or Plumbing Contractor.

E. All low voltage control wiring for Mechanical and Plumbing equipment shall be installed in conduit. Furnishing, installation and connection of all low voltage conduit, boxes, wiring and controls shall be by the Mechanical and/or Plumbing Contractor.

F. Disconnects (Motor And Circuit)

1. Disconnect switches shall be as manufactured by ITE- Siemens, General Electric or Square D.

G. Disconnects (Motor: Fused):

1. Disconnect switches shall be provided and located at all motors.
2. Switches for three-phase motors shall be heavy-duty, horsepower rated three-pole, and surface mounted except as noted on drawings.
3. Switches containing more than three poles shall be as specified on the drawings.
4. Switches for single-phase, fractional horsepower motors shall be heavy-duty, horsepower rated.
5. Switches shall be horsepower rated.

G. Manual motor starters, where required, shall have toggle type operators with pilot light and melting alloy type overload relays, SQUARE D COMPANY, Class 2510, Type FG-1P (surface) or Type FS-1P (flush) or ITE, WESTINGHOUSE or GENERAL ELECTRIC equal.

END OF SECTION

SECTION 260519 - LINE VOLTAGE WIRE AND CABLE

PART 1 - GENERAL

1.1 Description of Work:

A. The work of this Section consists of providing all wire and cable rated 600 volts or less, including splices and terminations, as shown on the Drawings and as described herein.

1.2 Related Work:

A. See the following Specification Section for work related to the work in this Section:

1. 260542 Conduits, Raceways and Fittings.

2. 260533 Junction and Pull Boxes.

1.3 Quality Assurance

A. Field tests shall be performed as specified in paragraph 3.04 of this Section.

PART 2 - PRODUCTS

2.1 Conductors:

A. Conductors shall be copper, type THHN/THWN/MTW oil and gasoline resistant, 600 volt rated insulation.

B. Conductors shall be stranded copper.

C. Minimum power and control wire size shall be No. 12 AWG unless otherwise noted.

D. All conductors used on this Project shall be of the same type and conductor material.

2.2 Cables:

A. All individual conductors shall be copper with type THHN/THWN, 600 volt rated insulation.

B. Insulation Marking - All insulated conductors shall be identified with printing colored to contrast with the insulation color.

C. Color Coding - As specified in paragraph 3.03.

D. Special Wiring - Where special wiring is proposed by an equipment manufacturer, submit the special wiring requirements to the Owner's Representative and, if approved, provide same. Special wire shall be the type required by the equipment manufacturer.

E. Other Wiring - Wire or cable not specifically shown on the Drawings or specified, but required, shall be of the type and size required for the application and as approved by the Owner's Representative.

F. Manufacturer - Acceptable manufacturers including Cablec, Southwire, or equal.

2.3 Terminations:

A. Manufacturer - Terminals as manufactured by T&B, Burndy or equal.

B. Wire Terminations – Stranded conductors shall be terminated in clamping type terminations which serve to contain all the strands of the conductor. Curling of a stranded conductor around a screw type terminal is not allowed. For screw type terminations, use a fork type stake-on termination on the stranded conductor. Use only a stake-on tool approved for the fork terminals selected.

C. End Seals - Heat shrink plastic caps of proper size for the wire on which used.

2.4 Tape:

A. Tape used for terminations and cable marking shall be compatible with the insulation and jacket of the cable and shall be of plastic material.

PART 3 - EXECUTION

3.1 Cable Installation:

A. Clean Raceways - Clean all raceways prior to installation of cables as specified in Section 260542 - Conduits Raceway and Fittings.

B. All line voltage wiring shall be installed in conduit.

C. All feeder conductors shall be continuous from equipment to equipment. Splices in feeders are not permitted unless specifically noted or approved by the Electrical Engineer.

D. All branch circuit wiring shall be run concealed in ceiling spaces, walls, below floors or in crawl spaces unless noted otherwise.

E. Cable Pulling - Exercise care in pulling wires and cables into conduit or wireways so as to avoid kinking, putting undue stress on the cables or otherwise abrading them. No

grease will be permitted in pulling cables. Only soapstone, talc, or UL listed pulling compound will be permitted. The raceway construction shall be complete and protected from the weather before cable is pulled into it. Swab conduits before installing cables and exercise care in pulling, to avoid damage to conductors.

F. Bending Radius - Cable bending radius shall be per applicable code. Install feeder cables in one continuous length.

G. Equipment Grounding Conductors - Provide an equipment grounding conductor, whether or not it is shown on the Drawings, in all conduits or all raceways.

H. Panelboard Wiring - In panels, bundle incoming wire and cables which are No. 6 AWG and smaller, lace at intervals not greater than 6 inches, neatly spread into trees and connect to their respective terminals. Allow sufficient slack in cables for alterations in terminal connections. Perform lacing with plastic cable ties or linen lacing twine. Where plastic panel wiring duct is provided for cable runs, lacing is not necessary when the cable is properly installed in the duct.

3.2 Cable Terminations and Splices:

A. Splices - UL Listed wirenuts.

B. Terminations - Shall comply with the following:

1. Make up and form cable and orient terminals to minimize cable strain and stress on device being terminated on.

2. Burnish oxide from conductor prior to inserting in oxide breaking compound filled terminal.

3.3 Circuit and Conductor Identification:

A. Color Coding - Provide color coding for all circuit conductors. Insulation color shall be white for neutrals and green for grounding conductors. Conductor colors shall be as follows:

VOLTAGE	208/120V	480/277V
Phase A	Black	Brown
Phase B	Red	Orange
Phase C	Blue	Yellow
Neutral	White	Grey
Ground	Green	Green

B. Color coding shall be in the conductor insulation for all conductors #10 AWG and smaller; for larger conductors, color shall be either in the insulation or in colored plastic tape applied at every location where the conductor is readily accessible.

C. Circuit Identification - All underground distribution and service circuits shall be provided with plastic identification tags in each secondary box and at each termination. Tags shall identify the source transformer of the circuit and the building number(s) serviced by the circuit.

3.4 Field Tests:

A. All systems shall test free from short circuits and grounds, shall be free from mechanical and electrical defects, and shall show an insulation resistance between phase conductors and ground of not less than the requirements of the CEC. All circuits shall be tested for proper neutral connections.

B. Insulation Resistance Tests: Perform insulation resistance tests on circuits with #2 AWG and larger conductors to be energized with a line-to-neutral voltage of 120 volts or more. Make these tests before all equipment has been connected. Test the insulation with a 500Vdc insulation resistance tester with a scale reading 100 megohms. The insulation resistance shall be 2 megohms or more. Submit results for review.

END OF SECTION

SECTION 260526 – GROUNDING

PART 1 - GENERAL

1.1 Section Includes:

A. Conduits, wires, ground rods and other materials for the electrical grounding system.

1.2 Related Sections:

A. Section 260500 - Electrical General Requirements.

PART 2 - PRODUCTS

2.1 Ground Rod:

A. "Copperweld" ground rod conforming to or exceeding requirements of U.L. Specification No. 467 (ANSI C-33.8). Rod shall be 3/4" diameter and 10' in length, unless otherwise noted on the Drawings.

2.2 Below Grade Connections:

A. Compression fittings, Thomas & Betts, Series 52000, 53000 or 54000 or approved equal.

2.3 Hardware:

A. Bolts, nuts and washers shall be bronze, cadmium plated steel or other non-corrosive materials, approved for the purpose.

2.4 Waterproof Sealant:

A. Use Kearney "Aqua Seal" mastic sealant on all below grade clamp or compression type connections.

PART 3 - EXECUTION

3.1 Grounding and Bonding:

A. Grounding and bonding shall be as required by codes and local authorities.

B. All electrical equipment shall be grounded, including, but not limited to, panel boards, terminal cabinets and outlet boxes.

C. The ground pole of receptacles shall be connected to their outlet boxes by means of a copper ground wire connecting to a screw in the back of the box.

D. A green insulated copper ground wire, sized to comply with codes, shall be installed in all conduit runs.

E. All metal parts of pull boxes shall be grounded per code requirements.

F. All ground conductors shall be green insulated copper.

G. The ground system electrodes shall be tested for resistance before the equipment ground conductors are connected. Maximum ground system resistance shall be 25 ohms. Install up to two additional ground rods to meet the 25 ohm requirement. Multiple ground rods shall not be less than 10 feet apart.

H. Grounding of the panels shall be completed as indicated on the Drawings.

END OF SECTION

SECTION 260533 - OUTLET, JUNCTION AND PULL BOXES

PART 1 - GENERAL

1.1 Description of Work:

A. The work of this Section consists of providing all required labor, supervision, materials and equipment to satisfactorily complete all electrical installations shown on the drawings, included in these Specification, or otherwise needed for a complete and fully operating facility. The work shall include but not be limited to the following:

B. Furnish and install all required material, supports and miscellaneous material for the satisfactory interconnection of all associated electrical systems.

1.2 Related Work:

A. See the following specification sections for work related to the work of this section.

1. 260500 General Electrical Requirements.

2. 260542 Conduits, Raceway and Fittings.

3. 260519 Line Voltage Wire and Cable.

PART 2 - PRODUCTS

2.1 Outlet boxes, Junction and Pull boxes

A. Standard Outlet Boxes: Galvanized, steel, knock-out type of size and configuration best suited to the application indicated on the Drawings. Minimum box size shall be 4 inches square (octagon for most light fixtures) by 1-1/2 inches deep with mud rings as required.

B. Switch boxes: Minimum box size shall be 4 inches square by 1-1/2 inches deep with mud rings as required. Install multiple switches in standard gang boxes with raised device covers suitable for the application indicated.

C. Conduit bodies: Cadmium plated, cast iron alloy. Conduit bodies with threaded conduit hubs and neoprene gasketed, cast iron covers. Bodies shall be used to facilitate pulling of conductors or to make changes in conduit direction only. Splices are not permitted in conduit bodies. Crouse-Hinds Form 8 Condulets, Appleton Form 35 Unilets or equal.

D. Sheet Metal Boxes: Use standard outlet or concrete ring boxes wherever possible; otherwise use a minimum 16 gauge galvanized sheet metal, NEMA I box sized to Code requirements with covers secured by cadmium plated machine screws located six inches on centers. Circle AW Products, Hoffman Engineering Company or equal.

E. Flush Mounted Pull boxes and Junction boxes: Provide overlapping covers with flush head cover retaining screws, prime coated.

PART 3 - EXECUTION

3.1 Outlet Boxes

A. General:

1. All outlet boxes shall finish flush with building walls, ceilings and floors except in mechanical and electrical rooms above accessible ceiling or where exposed work is called for on the Drawings.

2. Install raised device covers (plaster rings) on all switch and receptacle outlet boxes installed in masonry or stud walls or in furred, suspended or exposed concrete ceilings. Covers shall be of a depth to suit the wall or ceiling finish.

3. Leave no unused openings in any box. Install close-up plugs as required to seal openings.

B. Box Layout:

1. Outlet boxes shall be installed at the locations and elevations shown on the drawings or specified herein. Make adjustments to locations as required by structural conditions and to suit coordination requirements of other trades.

2. Locate switch outlet boxes on the latch side of doorways.

3. Outlet boxes shall not be installed back to back nor shall through-wall boxes be permitted. Outlet boxes on opposite sides of a common wall shall be separated horizontally by at least one stud or vertical structural member.

4. For outlets mounted above counters, benches or backsplashes, coordinate location and mounting heights with built-in units. Adjust mounting height to agree with required location for equipment served.

5. On fire rated walls, the total face area of the outlet boxes shall not exceed 100 square inches per 100 square feet of wall area.

C. Supports:

1. Outlet Boxes installed in metal stud walls shall be equipped with brackets designed for attaching directly to the studs or shall be mounted on specified box supports.

2. Fixture outlet boxes installed in suspended ceiling of gypsum board or lath and plaster construction shall be mounted to 16 gauge metal channel bars attached to main ceiling runners.

3. Fixture outlet boxes installed in suspended ceilings supporting acoustical tiles or panels shall be supported directly from the structure above where pendant mounted lighting fixture are to be installed on the box.

4. Fixture Boxes above tile ceilings having exposed suspension systems shall be supported directly from the structure above.

5. Outlet and / or junction boxes shall not be supported by grid or fixture hanger wires at any locations.

3.2 Junction And Pull Boxes

A. General:

1. Install junction or pull boxes where required to limit bends in conduit runs to not more than 360 degrees or where pulling tension achieved would exceed the maximum allowable for the cable to be installed. Note that these boxes are not shown on the Drawings.

2. Locate pull boxes and junction boxes in concealed locations above accessible ceilings or exposed in electrical rooms, utility rooms or storage areas.

3. Install raised covers (plaster rings) on boxes in stud walls or in furred, suspended or exposed concrete ceilings. Covers shall be of a depth to suit the wall or ceiling finish.

4. Leave no unused openings in any box. Install close-up plugs as required to seal openings.

5. Identify circuit numbers and panel on cover of junction box with black marker pen.

B. Box Layouts:

1. Boxes above hung ceilings having concealed suspension systems shall be located adjacent to openings for removable recessed lighting fixtures.

C. Supports:

1. Boxes installed in metal stud walls shall be equipped with brackets designed for attaching directly to the studs or shall be mounted on specified box supports.

2. Boxes installed in suspended ceilings of gypsum board or lath and plaster construction shall be mounted to 16 gauge metal channel bars attached to main ceiling runners.

3. Boxes installed in suspended ceilings supporting acoustical tiles or panels shall be supported directly from the structure above.

4. Boxes mounted above suspended acoustical tile ceilings having exposed suspension systems shall be supported directly from the structure above.

END OF SECTION

SECTION 260542 - CONDUITS, RACEWAYS AND FITTINGS

PART 1 - GENERAL

1.1 Description of Work:

A. The work of this section consists of furnishing and installing conduits, raceways and fittings as shown on the Drawings and as described herein.

1.2 Related Work:

A. See the following specification sections for work related to the work in this section:

1. 260543 Underground Ducts
2. 260544 In Grade Pull Boxes
3. 260519 Line Voltage Wire and Cable
4. 260533 Junction and Pull Boxes

PART 2 - PRODUCTS

2.1 Conduits, Raceways:

A. Electrical Metallic Tubing (EMT) shall be hot-dip galvanized after fabrication. Couplings shall be compression or set-screw type.

B. Flexible Conduit: Flexible metal conduit shall be galvanized steel.

C. Galvanized Rigid Steel Conduit (GRS) shall be hot-dip galvanized after fabrication. Couplings shall be threaded type.

D. Rigid Non-metallic Conduit: Rigid non-metallic conduit shall be PVC Schedule 40 (PVC-40 or NEMA Type EPC-40) conduit approved for underground use and for use with 90˚ C wires.

2.2 Conduit Supports:

A. Supports for individual conduits shall be galvanized malleable iron one-hole type with conduit back spacer.

B. Supports for multiple conduits shall be hot-dipped galvanized Unistrut or Superstrut channels, or approved equal. All associated hardware shall be hot-dip galvanized.

C. Supports for EMT conduits shall be galvanized pressed steel single hole straps.

D. Clamp fasteners shall be by wedge anchors. Shot in anchors shall not be allowed.

2.3 Fittings:

A. Provide threaded-type couplings and connectors for rigid steel conduits; provide steel compression (watertight), or steel set-screw type for EMT, (die-cast zinc or malleable iron type fittings are not allowed). Provide threaded couplings and Meyers hubs for rigid steel conduit exposed to weather.

B. Fittings for flexible conduit shall be Appleton, Chicago, IL, Type ST, O-Z Gedney Series 4Q by General Signal Corp., Terryville, CT, T & B 5300 series, or approved equal.

C. Fittings for use with rigid steel shall be galvanized steel or galvanized cast ferrous metal; access fittings shall have gasketed cast covers and be Crouse Hinds Condulets, Syracuse, NY, Appleton Unilets, Chicago, IL, or approved equal. Provide threaded-type couplings and connectors; set-screw type and compression-type are not acceptable.

D. Fittings for use with rigid non-metallic conduit shall be PVC and have solvent-weld-type conduit connections.

E. Union couplings for conduits shall be the Erickson type and shall be Appleton, Chicago, IL, Type EC, O-Z Gedney 3-piece Series 4 by General Signal Corp., Terryvile, CT, or approved equal. Threadless coupling shall not be used.

F. Bushings:

1. Bushings shall be the insulated type.

2. Bushings for rigid steel shall be insulated grounding type, O-Z Gedney Type HBLG, Appleton Type GIB, or approved equal.

G. Conduit Sealants:

1. Fire Retardant Types: Fire stop material shall be reusable, non-toxic, asbestos-free, expanding, putty type material with a 3-hour rating in accordance with UL Classification 35L4 or as specified on the Drawings.

PART 3 - EXECUTION

3.1 Conduit, Raceway and Fitting Installation:

A. For conduit runs exposed to weather provide rigid metal (GRS).

B. For conduit run underground, in concrete or masonry block wall and under concrete slabs, install minimum ¾" size nonmetallic (PVC) with PVC elbows. Where conduits transition from underground or under slab to above grade install wrapped rigid metal (GRS) elbows and risers.

C. For conduit runs concealed in steel or wood framed walls or in ceiling spaces or exposed in interior spaces above six feet over the finished floor, install EMT.

D. Flexible metal conduit shall be used only for the connection of recessed lighting fixtures and motor connections unless otherwise noted on the Drawings. Liquid-tight steel flexible conduit shall be used for motor connections.

E. The minimum size raceway shall be 1/2-inch unless indicated otherwise on the Drawings.

F. Installation shall comply with the CEC.

G. From pull point to pull point, the sum of the angles of all of the bends and offset shall not exceed 360 degrees.

H. Conduit Supports: Properly support all conduits as required by the NEC. Run all conduits concealed except where otherwise shown on the drawings.

1. Exposed Conduits: Support exposed conduits within three feet of any equipment or device and at intervals not exceeding NEC requirements; wherever possible, group conduits together and support on common supports. Support exposed conduits fastened to the surface of the concrete structure by one-hole clamps, or with channels. Use conduit spacers with one-hole clamps.

   a. Conduits attached to walls or columns shall be as unobtrusive as possible and shall avoid windows. Run all exposed conduits parallel or at right angles to building lines.

   b. Group exposed conduits together. Arrange such conduits uniformly and neatly.

2. Support all conduits within three feet of any junction box, coupling, bend or fixture.

3. Support conduit risers in shafts with Unistrut Superstrut, or approved equal, channels and straps.

I. Moisture Seals: Provide in accordance with NEC paragraphs 230-8 and 300-5(g).

J. Where PVC conduit transitions from underground to above grade, provide rigid steel 90's with risers. Rigid steel shall be half-lap wrapped with 20 mil tape and extend minimum 12" above grade.

K. Provide a nylon pull cord in each empty raceway.

L. Provide galvanized rigid steel factory fittings for galvanized rigid steel conduit.

M. Slope all underground raceways to provide drainage; for example, slope conduit from equipment located inside a building to the pull box or manhole located outside the building.

N. Conduits shall be blown out and swabbed prior to pulling wires, or installation of pull cord in empty conduits.

END OF SECTION

SECTION 260543 - UNDERGROUND DUCTS

PART 1 - GENERAL

1.1 Description of Work:

A. The work of this section consists of furnishing and installing raceways, and raceway spacers with necessary excavation.

1.2 Related Work:

A. See the following specification sections for work related to the work of this section.

1. 02200 Excavation and Backfill

2. 260542 Conduit Raceway and Fittings

1.3 Standards and Codes:

A. Work and material shall be in compliance with and according to the requirements of the latest revision of the following standards and codes.

1. National Electrical Code (NEC) (Latest Revision)

2. California Electrical Code (CEC).

3. Underground Installations CEC - Article 300.5

4. Rigid NonMetallic Conduit CEC - Article 347

PART 2 - PRODUCTS

2.1 Raceways:

A. As specified in Section 260542 Conduits, Raceways and Fittings.

PART 3 - EXECUTION

3.1 Excavation:

A. As specified in Section 02200, Excavation and Backfill and as required for the work shown on the Drawings.

3.2 Install raceways as indicated on drawings.

3.3 Sand Encasement:

A. As specified in Section 02200 - Excavation and Backfill.

3.4 Backfill:

A. As specified in Section 02200 - Excavation and Backfill.

END OF SECTION

SECTION 260544 - IN GRADE PULL BOXES

PART 1 - GENERAL

1.1 Description of Work:

A. The work of this section consists of providing all labor, supervision, tools, materials, and performing all work necessary to furnish and install pre-cast concrete vaults, and pull boxes with necessary excavation.

1.2 Related Work:

A. See the following specification sections for work related to the work of this section.

1. 02200 Excavation and Backfill.

2. 260543 Underground Ducts.

1.3 Submittals:

A. As specified in Section 260500 and Division 01.

1. Catalog Data: Provide manufacturer's descriptive literature - Pre-cast Vaults, Pull Boxes and Accessories.

PART 2 - PRODUCTS

2.1 Materials and Equipment:

A. General Requirements:

1. Pull boxes for electrical power, controls and other communication circuits shall consist of pre-cast reinforced concrete boxes, extensions' bases, and covers as specified herein and as indicated on the Drawings. Pre-cast units shall be the product of a manufacturer regularly engaged in the manufacture of pre-cast vaults and pull boxes. Acceptable manufacturers are Christy, Utility Vault, Brooks, Associated Concrete or equal.

B. Construction:

1. Pre-cast concrete vaults and pull boxes for electrical power distribution and communication circuits with associated risers and tops shall conform to ASTM C478 and ACI 318. Pull boxes shall be the type noted on the Drawings and shall be constructed in accordance with the applicable details as shown. Tops and walls shall consist of reinforced concrete. Walls and bottom shall be of monolithic concrete

construction. Duct entrances and windows shall be located near the corners of structures to facilitate cable racking.

C. Covers:

1. The word "ELECTRICAL" shall be cast in the top face of all electrical cable boxes. The word “Signal” or “Fire Alarm” shall be cast in the top of the boxes utilized for these systems.

PART 3 - EXECUTION

3.1 Installation:

A. Install pull boxes where required to limit bends in conduit runs to not more than 360 degrees or where pulling tension achieved would exceed the maximum allowable for the cable to be installed. Note that these boxes are not shown on the Drawings.

B. Pre-cast pull boxes shall be installed approximately where indicated on the Drawings. The exact location of each pull box shall be determined after careful consideration has been given to the location of other utilities, grading, and paving. All cable boxes and secondary pull boxes shall be installed with a minimum of 6-inch thick crushed rock or sand bedding.

C. Paved areas - Vaults and pull boxes located in areas to be paved shall be installed such that the top of the cover shall be flush with the finished surface of the paving.

D. Unpaved Areas - In unpaved areas, the top of vaults and pull box covers shall be approximately 2 inches above finished grade.

E. Joint Seals - Section joints of pre-cast vaults and pull boxes shall be sealed with compound as recommended by the manufacturer.

F. Trenching, Backfilling, and Compaction - Trenching, backfilling and compaction shall be as specified in Section 02200 - Excavation and Backfill.

END OF SECTION

SECTION 262416 - PANELBOARDS AND DISTRIBUTION PANELS

PART 1 – GENERAL

1.1 Description of Work:

A. The work of this Section consists of providing panelboards and circuit breakers as shown on the Drawings and as described herein.

1.2 Related Work:

A. See the following specification sections for work related to the work in this Section.

1. 260519 Line Voltage Wire and Cable
2. 260526 Grounding
3. 262816 Circuit Breakers

1.3 Submittals:

A. Shop Drawings - As specified in Division 01 and Section 260500. For each panelboard and distribution panel furnished under this Contract, submit manufacturer's name, catalog data, and the following information:

1. Panelboard / distribution panel type.
2. Main bus and terminal connection sizes.
3. Location of line connections.
4. Cabinet dimension.
5. Gutter space.
6. Gauge of boxes and fronts.
7. Finish data.
8. Voltage rating.
9. Breaker manufacturer, types, trip rating, and interrupting ratings.
10. When information is available on the Drawings, show breaker circuit numbers and locations along with trip ratings on a panelboard layout.

B. Single Submittal - A single complete submittal is required for all products covered by this Section.

C. Closeout Submittals: Submit operation and maintenance data for panelboards and circuit breakers including nameplate data, parts lists, factory and field test reports, recommended maintenance procedures and typewritten as-built panel schedules. Submit in accordance with Division 01.

PART 2 – PRODUCTS

2.1 Panelboards:

A. General: Lighting and Receptacle Panelboards shall be the automatic circuit breaker type. The number and arrangement of circuits, trip ratings, spares and blank spaces for future circuit breakers shall be as shown on the Drawings or, if not shown, 42 circuits. All circuit breakers shall be quick-make, quick-break, thermal-magnetic, bolt-on type (unless otherwise noted on drawings), with 1, 2 or 3 poles a shown, each with a single operating handle. Tandem or piggy-back breakers shall not be used.

B. Nameplates:

1. Each panelboard shall have a field mounted identifying, rigid, plastic nameplate giving the panel identification as shown on the Drawings.

2. Each panelboard shall have a manufacturer's nameplate showing the voltage, bus rating, number of phases, frequency and number of wires.

C. Construction:

1. Door and trim shall be finished to match finish type and color of surrounding wall. Box shall be hot-dip galvanized, and field finished to match the front.

2. Panelboards and enclosures shall conform to requirements of all relevant codes. Panelboards shall be suitable for use as service equipment.

3. Panelboards shall be furnished with hinged trim fronts with key latch and a typed directory card and holder. Panelboard circuits shall be arranged with odd numbers on the left and even numbers on the right. Provide weatherproof, NEMA type 3R enclosures for outdoor installation.

D. Busbars: Panelboard busbars shall be phase sequence type suitable for bolt-on circuit breakers. All busbars shall be copper.

E. Circuit Breakers: Circuit breakers shall be the molded case type with trip and interrupting ratings as shown on the Drawings.

F. Manufacturer:

1. Panelboard manufacturer shall be Square D, Siemens, [I.E.M], [General Electric], [or] [Eaton Cutler Hammer]. Panelboards shall be of the same manufacturer as the switchboard.

2.2 Distribution Panels:

A. General: Distribution panels shall be the automatic circuit breaker type. The number and arrangement of circuits, trip ratings, spares and blank spaces for future circuit breakers shall be as shown on the Drawings. All circuit breakers shall be quick-make, quick-break, thermal-magnetic bolt-on type, with 1, 2 or 3 poles a shown, each with a single operating handle. Tandem or piggy-back breakers shall not be used.

B. Nameplates:

1. Each distribution panel shall have a field mounted, identifying, rigid, plastic nameplate giving the panel identification as shown on the Drawings.

2. Each distribution panel shall have a manufacturer's nameplate showing the voltage, bus rating, number of phases, frequency and number of wires.

C. Construction:

1. Door and trim shall be finished to match color of surrounding wall. Box shall be hot-dip galvanized, field finished to match the front.

2. Distribution panels and enclosures shall conform to requirements of all relevant codes. Distribution panels shall be suitable for use as service.

3. Distribution panels shall have a front door with key latch and a typed directory card and permanently attached holder. Adhesive backed holders are not acceptable. Distribution panels circuits shall be arranged with odd numbers on the left and even numbers on the right. Provide weatherproof, NEMA type 3R enclosures for outdoor installation.

D. Busbars: Distribution panels busbars shall be phase sequence type suitable for bolt-on circuit breakers. All busbars shall be copper, sized for a maximum current density of 1000A psi.

E. Circuit Breakers: Circuit breakers shall be the molded case type with trip and interrupting ratings as shown on the Drawings.

F. Manufacturer:

1. Distribution panel manufacturer shall be Square D, Siemens, [I.E.M], [General Electric], [or] [Eaton Cutler Hammer]. [Distribution panels shall be of the same manufacturer as the switchboard.]

PART 3 – EXECUTION

3.1 Installation: Panelboards and Distribution Panels shall be installed where indicated on the Drawings, and in accordance with the manufacturer's instructions.

3.2 Mounting:

A. Panelboards and Distribution Panels shall be mounted with the top of the box 6'-6" above the floor. Panelboards and Distribution Panels shall be plumb within 1/8-inch. The highest breaker operating handle shall not be higher than 72 inches above the floor.

3.3 Field Tests:

A. Insulation Resistance Tests: Perform insulation resistance tests on circuits with #2 AWG and larger conductors to be energized with a line-to-neutral voltage of 120 volts or more. Make these tests after all equipment has been connected, except that equipment which may be damaged by the test voltage shall not be connected. Test the insulation with a 500Vdc insulation resistance tester with a scale reading 100 megohms. The insulation resistance shall be 2 megohms or more. Submit results for review.

B. Grounding: Grounding shall conform to Section 260526.

C. Continuity: Panelboard and Distribution Panel circuits shall be tested for continuity prior to energizing. Continuity tests shall be conducted using a dc device with a bell or buzzer.

END OF SECTION

SECTION 262726 - DEVICES WIRING

PART 1 – GENERAL

1.1 Description of Work

A. The work of this section consists of:

1. Furnishing, installing, and connecting all duplex receptacles complete with wall plates and/or covers, as shown on the Drawings.

2. Furnishing, installing and connecting all light switches complete with wall plates and or handle operators, as shown on the Drawings.

1.2 Related Work:

A. See the following specification sections for work related to the work of this section:

1. 260542 Conduits, Raceways and Fittings.

2. 260519 Line Voltage Wire and Cable.

3. 260533 Junction and Pull Boxes.

1.3 Submittals: As specified in Section 260500 and Division 01.

A. Submit manufacturers published descriptive literature properly marked to identify the items to be supplied.

B. A single complete submittal is required for all products covered by this Section.

PART 2 – PRODUCTS

2.1 Receptacles:

A. General - Receptacles shall be heavy duty, high abuse, grounding type.

B. [Tamper Resistant] Duplex Receptacles:

1. Receptacles shall be specification grade, rated 20 ampere, two-pole, 3-wire, 125 volt, NEMA 5-20 configuration, self-grounding with screw terminals. Color shall be as selected by the Architect.

2. Devices shall have a nylon face, back and side wired.

3. Manufacturer: Hubbell #DR20 Series [Hubbell #DR20_ _ TR], Leviton #16352 Series [Leviton # 16352-TRE _ _ Series].

C. GFCI Receptacles[Tamper Resistant]:

1. Device shall be rated 20 ampere, 2-pole, 3-wire, 120 volt, conforming to NEMA 5-20 configuration. Face shall be nylon composition. Unit shall have an LED type red indicator light, test and reset push buttons. Color shall be as selected by the Architect.

2. GFCI component shall meet UL 943 Class A standards with a tripping time of 1/40 second at 5 milliamperes current unbalance. Operating range shall extend from -31 F to 158 F. Unit shall have transient voltage protection and shall be ceramic encapsulated for protection against moisture.

3. Manufacturer: Hubbell #GF20_ _LA Series [Hubbell # GFTR20 _ _ Series], Leviton #7899 Series [Leviton # X7899-TRE Series].

D. Weather Resistant GFCI Receptacles:

1. Device shall be rated 20 ampere, 2-pole, 3-wire, 120 volt, conforming to NEMA 5-20 configuration, Face shall be nylon composition. Unit shall have a LED type red indicator light, test and reset push buttons. Color shall be as selected by the architect.

2. GFCI component shall meet UL 943 Class A standards with a tripping time of 1/40 second at 5 milliamperes current unbalance. Operating range shall extend from -31 F to 158 F. Unit shall have transient voltage protection and shall be ceramic encapsulated for protection against moisture.

3. Manufacturer: Hubbell #GFTR20 _ _ Series, Leviton # W7899-TR Series.

E. Surge Suppression Receptacles:

1. Device shall be rated 20 ampere, 2-pole, 3-wire, 120 volt. Face shall be nylon composition. Unit shall have an LED type "Power-on" indication light and damage-alert audible alarm. Color shall be as selected by the Architect.

2. Surge suppression protection shall be listed to UL standard 1449 and shall instantly absorb a transient surge of 6,000 volts minimum. A minimum of four (4) Metal Oxide Varistors shall be utilized to absorb transients.

3. Manufacturer: Hubbell #HBL8362S Series, Leviton #8380 Series.

2.2 Switches:

A. Switches shall be rated 20 amperes to 120/277 volts ac. Units shall be flush mounted, self-grounding, quiet operating rocker devices. Rocker color shall be as selected by the Architect.

1. Manufacturer: Hubbell #DS_20_ _ Series, Leviton #5621 Series. See plans for single pole, three way and four way requirements.

B. Timed switches: Shall be as designed by Paragon Electric Company # ET2000f or Watt Stopper TS-200 rated for the voltage specified on drawings. Time-out shall be adjustable from 5 minutes up to 12 hours. Unit shall be provided with warning alarm.

C. Dimmer switches: Switch shall be a specified on drawings, color per architect. Heat fins shall not be removed, where dimmer switches are ganged together, care shall be taken to install correct size backbox to accommodate switches without removing fins.

2.3 Plates:

A. General - Plates shall be of the style and color to match the wiring devices, and of the required number of gangs. Plates shall conform with NEMA WD 1 , UL 514 and FS W-P-455A. Plates on finished walls shall be non-metallic or stainless steel. Plates on unfinished walls and on fittings shall be of zinc plated steel or case metal and shall have rounded corners and beveled edges.

B. Non-Metallic: Plates shall be plain with beveled edges and shall be nylon or reinforced fiberglass.

C. Stainless Steel: Plates shall be .040 inches thick with beveled edges and shall be manufactured from No. 430 alloy having a brushed or satin finish.

D. Cast Metal: Plates shall be cast or malleable iron covers with gaskets so as to be moisture resistant or weatherproof.

E. Blank Plates: Cover plates for future telephone outlets shall match adjacent device wall plates in appearance and construction.

F. Weatherproof Plate: Cover plates in wet and damp locations shall have recessed in-use covers, Taymac or equal. Back box shall be suitable for the wall material where it is installed.

G. Labeling: All switch and receptacle plates shall be labeled on the top portion of the plate with the panelboard and circuit number serving that device. Lettering shall be 3/16” minimum high, black color, on clear Mylar 3/8” tape. Manufactured by P-touch or equal.

PART 3 – EXECUTION

3.1 Installation of Wiring Devices:

A. Interior Locations: In finished walls, install each device in a flush mounted box with washers as required to bring the device mounting strap level with the surface of the finished wall. On unfinished walls, surface mount boxes level and plumb.

B. Mounting Heights: Adjust boxes so that the front edge of the box shall not be farther back from the finished wall plane than 1/4-inch. Adjust boxes so that they do not project beyond the finished wall. Height of device shall be as follows unless otherwise noted on the drawings:

1. Receptacles 15 Inches from finished floor to bottom of box.

2. Toggle Switches 48 Inches from finished floor to top of box.

C. Receptacles:

1. Ground each receptacle using a grounding conductor, not a yoke or screw contact.

2. Install receptacles with connections spliced to the branch circuit wiring in such a way that removal of the receptacle will not disrupt neutral continuity and branch circuit power will not be lost to other receptacles in the same circuit.

3.2 Installation of Wall Plates:

A. General - Plates shall match the style of the device and shall be plumb within 1/16-inch of the vertical or horizontal.

B. Interior Locations, Finished Walls: Install non-metallic plates so that all four edges are in continuous contact with the finished wall surfaces. Plaster filling will not be permitted. Do not use oversized plates or sectional plates.

C. Interior (not wet) Locations, Unfinished Walls: Install stainless steel or cast metal cover plates.

D. Wet Locations: Install cast metal plates with gaskets on wiring devices in such a manner as to provide a rain tight weatherproof installation. Cover shall be [lockable] outdoor “in use” type.

E. Future Locations: Install blanking cover plates on all unused outlets.

3.3 Tests:

A. Receptacles:

1. After installation of receptacles, energize circuits and test each receptacle to detect lack of ground continuity, reversed polarity, and open neutral condition.

END OF SECTION

SECTION 262816 - CIRCUIT BREAKERS

PART 1 – GENERAL

1.1 Description of Work:

A. The work of this Section consists of providing circuit breakers as shown on the Drawings and as described herein.

1.2 Related Work: See the following Specification Sections for work related to the work in this Section.

A. 260500 General Electrical Requirements

B. 262413 Switchboards

C. 262416 Panelboards and Distribution Panels

1.3 Submittals:

A. Shop Drawings - Submittals shall be in accordance with Section 260500 and Division 01. For each circuit breaker furnished under this Contract, submit manufacturer's name, catalog data, and the following information:

1. Terminal connection sizes.

2. Voltage rating.

3. Breaker manufacturer, types, trip ratings and interrupting ratings.

B. Single Submittal - A single complete submittal is required for all products covered by this Section.

C. Closeout Submittals: Submit in accordance with and Section 260500, operation and maintenance data for circuit breakers including nameplate data, parts lists, manufacturer's circuit breaker timer, current, coordination curves, factory and field test reports and recommended maintenance procedures.

PART 2 – PRODUCTS

2.1 Circuit Breaker: Each circuit breaker shall consist of the following:

A. A molded case breaker with an over center toggle-type mechanism, providing quick-make, quick-break action. Each circuit breaker shall have a permanent trip unit containing individual thermal and magnetic trip elements in each pole. Multipole circuit breakers shall have variable magnetic trip elements which are set by a single adjustment

to assure uniform tripping characteristics in each pole. Circuit breakers shall be of the bolt-on type unless otherwise noted.

B. Breaker shall be calibrated for operation in an ambient temperature of 40 C.

C. Each circuit breaker shall have trip indication by handle position and shall be trip-free.

D. Three pole breakers shall be common trip.

E. The circuit breakers shall be constructed to accommodate the supply connection at either end of the circuit breaker. Circuit breaker shall be suitable for mounting and operation in any position.

F. Breakers shall be rated as shown on Drawings.

G. Circuit breaker and/or Fuse/circuit breaker combinations for series connected interrupting ratings shall be listed by UL as recognized component combinations for use in the end use equipment in which it is installed. Any series rated combination used shall be marked on the end use equipment per CEC section 110-22.

H. Breakers shall be UL listed. Circuit breakers shall have removable lugs.

I. Lugs shall be UL listed for copper and aluminum conductors.

J. Breakers shall be UL listed for installation of mechanical screw type lugs.

K. Circuit breakers serving HACR rated loads shall be HACR type. Circuit breakers serving other motor loads shall be motor rated.

PART 3 – EXECUTION

3.1 Mounting:

A. The highest breaker operating handle shall not be higher than 72 inches above the floor.

END OF SECTION

SECTION 265100 - LIGHTING

PART 1 – GENERAL

1.1 Description of Work:

A. The work of this section consists of providing a lighting system complete, including fixtures, lamps, hangers, reflectors, glassware, lenses, auxiliary equipment, ballasts and sockets.

1.2 Related Work:

A. See the following specification sections for work related to the work of this section:

1. 260500 General Electrical Requirements.

2. 260542 Conduit, Raceway and Fittings.

3. 260519 Line Voltage Wire and Cable.

4. 260533 Junction and Pull Boxes.

1.3 Submittals: In accordance with Division 01.

A. Submit descriptive data, photometric curves for each fixture configuration proposed.

B. Submit shop drawings showing proposed methods for mounting lighting fixtures.

C. Seismic Requirements: Submit:

1. Sketch or description of the anchorage system.

D. Submit Operation and Maintenance Data per Division 01.

1.4 Warranty: High Intensity Discharge lamps which fail within the first year after final acceptance shall be replaced by the Contractor with the warranty clause of the General Provisions.

PART 2 – PRODUCTS

2.1 Fixtures

A. Fixtures shall be of the types, wattage's and voltages shown on the Drawings and be UL classified and labeled for the intended use.

B. Substitutions will not be considered unless the photometric distribution curve indicates the proposed fixture is equal to or exceeds the specified luminaire.

C. Luminaire wire, and the current carrying capacity thereof shall be in accordance with the CEC.

D. Luminaires and lighting equipment shall be delivered to the project site complete, with suspension accessories, aircraft cable, stems, canopies, hickeys, castings, sockets, holders, ballasts, diffusers, frames, and related items, including support and braces.

2.2 Ballasts:

A. Ballasts shall be of the types shown on the drawings. Ballasts shall be CBM certified and bear the UL label. Magnetic ballasts shall be the high power factor type. Electronic ballasts shall be suitable for lamps specified by Advance, Magnetek/Universal, Motorola or approved equal. Electronic ballast shall be CBM certified and have a 10% maximum total harmonic distortion.

B. All ballasts for fixtures installed outdoors shall provide reliable starting of lamps at 0 F at 90% of the nominal line voltage.

C. Ballasts producing excessive noise (above 36 dB) or vibration will be rejected and shall be replaced at no expense to the Owner.

2.3 Lamps:

A. Lamps shall be new at the time of acceptance and shall be General Electric, Osram /Sylvania, Phillips, or approved equal.

B. Unless otherwise noted on the drawings, lamps shall be third generation T8, 3500 K, and 85 CRI minimum.

1. Third Generation: Also known as High-Performance, Higher Lumen, or Super, the third generation of 32 Watt T8 lamps offers 3,100 lumens and a long-life rating of 24,000 hours. Efficacy is high, with lumens per watt in the range of 94 to 100. CRI is 82 to 86.

PART 3 – EXECUTION

3.1 Installation:

A. General:

1. All fixtures and luminaires shall be clean and lamps shall be operable at the time of acceptance.

2. Install luminaires in accordance with manufacturer's instructions, complete with lamps, ready for operation as indicated.

3. Align, mount, and level the luminaires uniformly.

4. Avoid interference with and provide clearance for equipment. Where an indicated position conflicts with equipment locations, change the location of the luminaire by the minimum distance necessary.

B. Mounting and Supports:

1. Mounting heights shall be as shown on the Drawings. Unless otherwise shown, mounting height shall be measured to the centerline of the outlet box for wall mounted fixtures and to the bottom of the fixture for suspended fixtures and to the bottom of the fixture for all other types.

2. Luminaire supports shall be anchored to structural members.

3. Pendant stem mounted luminaires shall be provided with ball aligners to assure a plumb installation and shall have a minimum 45 degree clean swing from horizontal in all directions. Sway bracing shall be installed as required to limit the movement of the fixture. Fixtures shall be allowed to sway a maximum of 45º without striking any object.

4. Fixture supports shall be designed to resist earthquake forces of seismic zone 4.

5. Refer to fixture mounting details on drawings for installation requirements.

6. Pendant cable mounted luminaries shall be provided with fully adjustable stainless steel aircraft cable hangers unless otherwise noted on the Drawings.

END OF SECTION

Division 32: Exterior Improvements

SECTION 320000 – CONCRETE REINFORCEMENT

1.0 GENERAL

1.1 SUMMARY

A. This Section includes all labor, materials, equipment, operations, or methods listed, mentioned or scheduled on the plans and/or herein specified, including all incidentals necessary and required for completion of work under this Section.

B. Provide and install Reinforcing steel bars, welded steel wire fabric fabricated steel bar or rod mats for cast-in-place concrete.

C. Support chairs, bolsters, bar supports, spacers, for supporting reinforcement.

1.2 SUBMITTALS

A. Documents affecting work of this Section include, but are not necessarily limited to, General Conditions, Special Conditions and Division 1 of these Contract Documents.

B. Section 01300 - Submit under provisions.

C. Shop Drawings:

1. Submit fully detailed shop drawings, including bending schedules and bending diagrams. Indicate placing details and size location of reinforcing steel. Shop drawings shall be of such detail and completeness that fabrication and placement at the site can be accomplished without the use of contract drawings for reference.

2. Do not fabricate and place reinforcing steel before the shop drawings review has been completed by the Architect and Structural Engineer and returned to the Contractor. Review of shop drawings by the Architect and Structural Engineer will not relieve the Contractor of responsibility for errors or for failure in accuracy and complete placing of the work.

1.3 QUALITY ASSURANCE

A. Perform concrete reinforcement work in accordance with CRSI, Manual of Standard Practice.

B. Conform to ACI, and 2007 CBC.

C. Submit certified mill test reports (tensile and bending) for each heat or melt of steel prior to delivery of material to the job site. Where reinforcing is required to be welded, mill test reports shall verify the weld ability of the steel.

1.4 COORDINATION

A. Check architectural, structural, mechanical and electrical drawings for anchor bolt schedules and locations, anchors, inserts, conduits, sleeves, and any other items which are required to be cast in concrete. Make necessary provisions as required so that reinforcing steel will not interfere with the placement of such embedded items.

1.5 PRODUCT HANDLING

A. Bundle reinforcement and tag with suitable identification to facilitate shoring, placing and transport.

B. Keep a sufficient supply of tested and approved reinforcement on the site to avoid delaying the work.

C. Take means necessary to protect reinforcing steel before, during, and after installation and to protect the work and materials of other trades.

D. Store reinforcing steel in a manner to prevent damage, excessive rusting, and fouling with dirt, grease and other bond-breaking coatings.

E. Take necessary precautions to maintain identification after the bundles of reinforcing steel have been broken.

F. In the event of damage, immediately make repairs and replacements necessary to the acceptance of the Architect and at no additional cost to the owner.

2.0 PRODUCTS

2.1 REINFORCING STEEL

A. Reinforcing Bars: New, free of loose rust. 1. Billet-Steel Bars: ASTM A615, Grade 60.

B. Welded Wire Fabric: ASTM A185; flat sheets.

C. Tie Wire: 16 gauge minimum, black and annealed.

D. Accessories: Metal or plastic spacers, supports, ties, as required for spacing assembling and supporting reinforcing in place. Supports shall comply with CRSI, Manual of Standard Practice.

2.2 FABRICATION

A. Shop fabricate reinforcement in accordance with details on Drawings and 2007 CBC. Where specific details are not shown or noted, fabricate in conformance with ACI and CRSI.

B. Clean bars of loose rust, loose mill scale and substances which may decrease bond.

C. Bend bars cold and accurately to details on final reviewed shop drawings.

2.3 SOURCE QUALITY CONTROL

A. Testing will be performed by the District's testing laboratory under provisions of Section 1410.

B. Tests shall be made in accordance with the 2007 CBC. The testing laboratory will select samples for physical tests of reinforcing steel from material at the place of distribution, test the reinforcing steel and submit results of tests to the Architect for review prior to fabrication.

1. Identified Reinforcing Steel: One tensile test and one bend test shall be made from a specimen from each 10 tons or fraction thereof of each size of reinforcing steel, if reinforcing is taken from bundles identified with heat number, is accompanied by mill analysis and mill test reports, and is properly tagged with an identification certificate.

2. Unidentified Reinforcing Steel: One tensile and one bend test will be made for each 2-1/2 tons of fractions thereof of each size of reinforcing steel.

C. Costs of tests to determine if unidentified steel complies with specified standards will be deducted by the District from the Contract Sum by Change Order.

3.0 EXECUTION

3.1 EXAMINATION

A. Carefully examine the installed work of other trades prior to installing reinforcing steel and verify that such work is complete to the point where work of this section may commence.

B. Ensure that reinforcing steel is installed in strict accordance with pertinent codes and regulations, the final reviewed shop drawings and original design.

C. In the event of discrepancy, immediately notify the Architect and Structural Engineer. Do not proceed with installation in areas of discrepancy until discrepancies have been fully resolved.

3.2 PLACING REINFORCING STEEL

A. Place reinforcing steel in accordance with the Drawings, final reviewed shop drawings and the CRSI Manual of Standard Practice. Install reinforcement accurately and secure against movement, particularly under the weight of workers and the placement of concrete.

B. Locate reinforcement accurately in the forms and hold in place by means of supports adequate to prevent displacement and to maintain reinforcement at proper distances from form face. Place supports in accordance with CRSI Manual of Standard Practice. Use of wood supports and spacers inside the forms is not permitted.

C. Support reinforcement for slabs in precast concrete blocks or chairs spaced 4'-0" on center (maximum) both ways, staggered. Size blocks or chairs so the reinforcing is maintained at the proper elevation in the slab.

D. Wherever conduits, piping, inserts, sleeves, and other embedded items interfere with placing of reinforcing steel, obtain Architect's approval of methods of procedure before concrete is placed. Bending of bars around openings and sleeves is not permitted.

E. Tie reinforcing rigidly and securely with steel tie wire at splices, at crossing points and at intersections in the position shown on Drawings. After cutting, bed tie wire in such a manner that concrete placement will not force the wire ends to surface of concrete.

F. Make splices only at those locations shown on the Drawings or as authorized by the Architect and Structural Engineer. Stagger splices in adjacent bars per Class "B" (50 percent within required lap length).

G. Place welded wire fabric in as long lengths as practicable. Wire laps. Lap edges a minimum of 2 inches center to center of selvage wires with laps a minimum of 2 inches greater than transverse wire spacing; offset end laps in adjacent widths.

H. Tie dowels securely in place before concrete is deposited. In the event there are no bars in position to which dowels may be tied, add #3 bars (minimum) to provide proper support and anchorage. Do not bend dowels after placement of concrete.

I. Do not weld reinforcing steel and attachments to reinforcing steel unless the chemistry of the steel conforms to AWS D12.1-75. Thoroughly clean welding material and wire cuttings from forms for exposed concrete before any concrete is

placed. Tack welding of bars is not permitted for fabricating cages or assemblies.

3.3 FIELD QUALITY CONTROL

A. Installation and placement of reinforcing steel will be inspected by an authorized inspector prior to concrete pour.

END OF SECTION

SECTION 321123 – AGGREGATE BASE COURSE

1.0 GENERAL

1.1 SUMMARY

A. This Section includes all labor, materials, equipment, operations, or methods listed, mentioned or scheduled on the plans and/or herein specified, including all incidentals necessary and required for completion of work under this Section.

B. Provide and install aggregate base course as indicated on project Drawings and as specified herein.

1.2 RELATED SECTIONS

A. Documents affecting work of this Section include, but are not necessarily limited to, General Conditions, Special Conditions and Division 1 of these Contract Documents.

B. Division 03 – Concrete, all sections.

C. Section 312213, Rough Grading

1.3 REFERENCES

A. American Society for Testing and Materials (ASTM):

1. ASTM D1557 – Standard Test Methods for Laboratory Compaction Characteristics of Soil Using Modified Effort

2.0 PRODUCTS

2.1 MATERIALS

A. Class II Aggregate Base per Caltrans Standard Specifications, or Local Municipality.

3.0 EXECUTION

3.1 EXAMINATION

A. Comply with Section 013113, Project Coordination.

B. Verify substrate has been inspected, gradients and elevations are correct, and that it is dry.

3.2 PREPARATION

A. Correct irregularities in substrate gradient and elevation by scarifying, reshaping and re-compacting.

B. Do not place fill on soft, muddy, or frozen surfaces.

3.3 AGGREGATE PLACEMENT

A. Place aggregate in maximum 6-inch layers and compact to specified density.

B. Level and contour surfaces to elevations and gradients indicated.

C. Add small quantities of fine aggregate to coarse aggregate as appropriate to assist compaction.

D. Add water to assist compaction. If excess water is apparent, remove aggregate and aerate to reduce moisture content.

E. Use mechanical tamping equipment in areas inaccessible to compaction equipment.

3.4 TOLERANCES

A. Flatness: Maximum variation of 1/4 inch measured with 10-foot straight edge.

B. Scheduled Compacted Thickness: Within 1/4 inch.

C. Variation From Design Elevation: Within 1/2 inch.

3.5 FIELD QUALITY CONTROL

A. Comply with pertinent provisions of Division 1 of these Contract Documents for quality requirements and testing and inspection services.

B. Compaction testing will be performed in accordance with ASTM D1557.

C. If tests indicate Work does not meet specified requirements, remove Work, replace and retest at no cost to the Owner.

END OF SECTION

SECTION 321313 - PORTLAND CEMENT CONCRETE PAVING

1.0 GENERAL

1.1 SUMMARY

A. This Section includes all labor, materials, equipment, operations, or methods listed, mentioned or scheduled on the plans and/or herein specified, including all incidentals necessary and required for completion of work under this Section.

B. Provide and install concrete sidewalks, flush curbs and aggregate base course as shown on the Project Drawings.

1.2 RELATED SECTIONS

A. Documents affecting work of this Section include, but are not necessarily limited to, General Conditions, Special Conditions and Division 1 of these Contract Documents.

B. Section 032000 - Concrete Reinforcement

C. Section 033000 - Cast-In-Place Concrete

D. Section 079000 - Sealants and Caulking

E. Section 312213 - Rough Grading

F. Section 321123 - Aggregate Base Course

G. Section 321726 - Tactile Warning Surface

1.3 REFERENCES

A. ACI 304 (American Concrete Institute) Recommended Practice for Measuring, Mixing, Transporting and Placing Concrete.

B. ASTM A185 Welded Steel Wire Fabric for Concrete Reinforcement.

C. ASTM A497 Welded Deformed Steel Wire Fabric for Concrete Reinforcement.

D. ASTM A615 Deformed and Plain BilletSteel for Concrete Reinforcement.

E. ASTM C33 Concrete Aggregates.

F. ASTM C94 Ready Mix Concrete.

G. ASTM C150 Portland Cement

H. ASTM C260 AirEntraining Admixtures for Concrete.

I. ASTM C309 Liquid MembraneForming Compounds for Curing Concrete.

J. ASTM C494 Chemical Admixtures for Concrete.

K. ASTM D1751 Preformed Expansion Joint Fillers for Concrete Paving and Structural Construction.

L. ASTM D1752 Preformed Sponge Rubber and Cork Expansion Joint Fillers for Concrete Paving and Structural Construction.

1.4 QUALITY ASSURANCE

A. Perform work in accordance with requirements of Local Municipality.

B. Maintain one copy of each document on site.

C. Obtain cementitious materials from same source throughout.

D. Work shall conform with California Building Code (CBC), 2013 Edition, Section 11B Division 4.

1.5 ENVIRONMENTAL REQUIREMENTS

A. Do not place concrete when base surface temperature is less than 40 degrees, or surface is wet or frozen.

2.0 PRODUCTS

2.1 FORM MATERIALS

A. Wood or Steel form material, profiled to suit conditions.

B. Joint Filler: ASTM D1751.

2.2 REINFORCEMENT

A. Reinforcing Steel: ASTM A615; deformed billet steel bars; unfinished.

B. Welded Steel Wire Fabric: Plain type, ASTM A185 in flat sheets or coiled rolls; unfinished.

C. Dowels: ASTM A615; plain steel, unfinished.

2.3 CONCRETE MATERIALS

A. Concrete Materials: As specified in Section 033000, Cast-In-Place Concrete. Provide in accordance with local municipality Public Work's standards.

2.4 CONCRETE MIX BY PERFORMANCE CRITERIA

A. Provide concrete to the following criteria:

1. Compressive Strength: 3000 psi @ 28 days.

3.0 EXECUTION

3.1 EXAMINATION

A. Verify compacted subgrade or granular base is acceptable and ready to support paving and imposed loads.

B. Verify gradients and elevations of base are correct.

3.2 SUBBASE

A. Section 321123, Aggregate Base Course forms the base construction for Work of this section.

3.3 PREPARATION

A. Moisten base to minimize absorption of water from fresh concrete.

B. Coat surfaces of manhole and catch basin frames with oil to prevent bond with concrete pavement.

C. Notify Architect/Engineer minimum 24 hours prior to commencement of concreting operations.

3.4 FORMING

A. Place and secure forms to correct location, dimension, profile, and gradient.

B. Assemble formwork to permit easy stripping and dismantling without damaging concrete.

C. Place joint filler vertical in position, in straight lines. Secure to formwork during concrete placement.

3.5 REINFORCEMENT

A. Place reinforcement as indicated on drawings.

B. Interrupt reinforcement at expansion joints.

C. Place reinforcement to achieve pavement and curb alignment as detailed.

3.6 PLACING CONCRETE

A. Place concrete in accordance with local municipality Public Work's standards.

B. Ensure reinforcement, inserts, embedded parts, formed joints and are not disturbed during concrete placement.

C. Place concrete continuously over the full width of the panel and between predetermined construction joints.

D. Place concrete to pattern indicated on drawings.

3.7 JOINTS

A. Place expansion and contraction joints as shown on drawings. Align curb, gutter, and sidewalk joints.

B. Place joint filler between paving components and building or other appurtenances. Recess top of filler 1/4 inch for sealant placement.

C. Provide scored sawn joints as indicated on drawings and between sidewalks and curbs.

3.8 FINISHING

A. Sidewalk Paving: Medium (non-slip) broom and trowel joint edges as indicated on Architectural drawings.

B. Curbs and Gutters: Light broom.

C. Direction of Texturing: Transverse to pavement direction.

D. Inclined Pedestrian Ramps: Heavy sand-blast finish to path of travel.

E. Place curing compound on exposed concrete surfaces immediately after finishing.

3.9 JOINT SEALING

A. Separate pavement from vertical surfaces with thick joint filler.

B. Place joint filler in pavement pattern placement sequence. Set top to required elevations. Secure to resist movement by wet concrete.

C. Extend joint filler from bottom of pavement to within 1/8 inch of finished surface. Conform to joint sealer manufacturer requirements.

3.10 TOLERANCES

A. Maximum Variation of Surface Flatness: 1/4 inch in 10 feet.

B. Maximum Variation From True Position: 1/2 inch.

3.11 FIELD QUALITY CONTROL

A. Testing firm will take cylinders and perform slump and air entrainment tests in accordance with ACI 301 and as indicated on DSA Form 103.

B. One slump test will be taken for each set of test cylinders taken.

C. Maintain records of placed concrete items. Record date, location of pour, quantity, air temperature, and test samples taken.

3.12 PROTECTION

A. Immediately after placement, protect pavement from premature drying, excessive hot or cold temperatures, and mechanical injury.

B. Do not permit pedestrian or vehicular traffic over pavement for 7 days minimum after finishing.

END OF SECTION

SECTION 033 - IRRIGATION

1.0 GENERAL

1.1 SUMMARY

A. This Section includes all labor, materials, equipment, operations, or methods listed, mentioned or scheduled on the plans and/or herein specified, including all incidentals necessary and required for completion of work under this Section.

B. Provide and install all irrigation work as shown on project Drawings, including all connections, irrigation lines, sleeves and equipment, and moisture sensors and clock timers necessary for a complete irrigation system.

C. Coordinate existing system and relocation of some existing valves with new installation at main water source.

D. Maintain water to existing areas to maintain planting.

1.2 RELATED SECTIONS

A. Documents affecting work of this Section include, but are not necessarily limited to, General Conditions, Special Conditions and Section 01 of these Contract Documents.

B. Section 032 Planting: Landscape Work

1.3 QUALITY ASSURANCE

A. Standards, Specifications, and Codes

1. All work shall be in full accordance with the latest rules and regulations of the Safety Orders of the Division of Industrial Safety, the Uniform Plumbing Code, and other applicable state or local codes or regulations in effect at the time of the project. Nothing on the Drawings or in the Specifications is to be construed to permit work not conforming to these codes, rules, and regulations.

2. When the Specifications call for materials or construction of a better quality or larger size than required by the above rules and regulations, the provisions of these Specifications shall take precedence over the requirements of said rules and regulations.

3. The Contractor shall furnish, without extra charge, any additional material and/or labor when required by compliance with the above rules and regulations though the work be not mentioned in these particular Specifications or shown on the Drawings.

B. Wherever the term, “as per manufacturer's specifications and/or instructions,” is used, it shall mean in strict accordance with the manufacturer's printed directions. If these directions conflict with this Specification, the matter shall be brought to the attention of the Architect and CM and his instructions obtained before proceeding with the work.

1.4 SUBMITTALS

A. Comply with pertinent provisions of Section 01.

B. Materials Lists: Complete lists of materials proposed for installation.

1. List all materials by manufacturer's name and model number.
2. Only approved materials and items of equipment shall be used.
3. Any proposed substitutions, together with descriptive material, shall be submitted to the Architect.
4. Prior to the final acceptance of the irrigation system, the Contractor shall furnish three (3) individually bound Service Manuals to the Architect for use by the County.
5. The manuals shall contain complete exploded drawings, diagrams, and spare-parts lists of all equipment installed showing components and catalog numbers together with the manufacturer's name and address.
6. In addition, each Service Manual shall contain the following:
   a. Index sheet indicating the Contractor's name, address, and phone number.
   b. Copies of equipment warranties and certificates.
   c. List of equipment with names, addresses, and telephone numbers of all local manufacturers’ representatives.
   d. Complete operating and maintenance instructions in sufficient detail to permit operating personnel to understand, operate, and maintain all equipment.

1.5 FEES AND PERMITS

A. Work under this Section shall include all licenses required to perform work under the California State License Board (www.cslb.ca.gov).

1.6 QUALITY ASSURANCE AND SPECIAL PROVISIONS

A. The use of a manufacturer's name and model or catalog number is for the purpose of establishing the standard of quality and general configuration desired.

B. All materials throughout the systems shall be new and in perfect condition, except those labeled to be reused in the contract drawings.

1.7 DELIVERY, STORAGE, AND HANDLING

A. Deliver all materials in timely manner to ensure uninterrupted progress of the work; store in such a manner as will preclude damage thereto and permit ready access for inspection and identification of each shipment.

B. Manufactured materials shall be delivered in original containers with brand and maker's names marked thereon.

1.8 EXISTING CONDITIONS

A. There is an existing water source to the rear courtyard. That water source can be used as it is connected to existing valves, verify that the front end of the line is attached to the main irrigation backflow preventer.

B The Contractor shall visit the subject site to review the various existing conditions. Conditions found to deviate from the Plans and Specifications shall be reported to the County’s Representative prior to commencing work.

C. A static water pressure test shall be taken at the points of connection by the Contractor. Should the pressure fall below 40 psi or above 60 psi, the City Representative, shall be notified prior to start of work.

D, All existing irrigation shall be re-connected to the new main line.

2.0 PRODUCTS

2.1 MATERIALS - GENERAL

A. All materials shall be as herein specified and as specified and/or indicated on the Drawings.

2.2 PIPE

A. Plastic: Polyvinyl Chloride (PVC), Type 1120-1220, ASTM D1785.

1. Class and/or Schedules as specified on the Drawings.

2. All pipe shall be new and free of blisters, internal striations, or any other defects or imperfections.

3. Pipe shall be continuously and permanently marked with manufacturer's name; material type, size, schedule, or class; and quality-control identifications.

B. Pipe Fittings:

1. Plastic: Polyvinyl Chloride (PVC) Type 1; ASTM D2466. Solvent weld as specified on the Drawings.

C. Remote-Control Wire: Solid Copper, 600-volt AC, Type UF-AWG, UL approved for direct burial.

1. Wire shall be continuously and permanently marked with manufacturer's name, wire size, and identification.

2. Color of Control Wires shall be as follows:

a. Pilot Wires: #14 black.

b. Common Wire: #12 white.

3.0 EXECUTION

3.1 INSPECTION

A. Examine substrate in which the work is to be performed.

B. Do not proceed until unsatisfactory conditions have been corrected.

3.2 COORDINATION

A. Schedule and coordinate work with other trades.

1. Install pipe and sleeves under paving and through walls and footings.

2. Do not install heads until walls, curbs, headers, and other related structures are in place.

3. Do not install pipe until planting areas have been scarified under Planting work.

3.3 PREPARATION

A. Verification of Dimensions and Grades:

1. All scaled dimensions are approximate.

2. Before proceeding with any work, carefully check and verify all dimensions on the site.

3. Spacing of headers and locations of valves and quick couplers shall be as indicated on the Drawings and specified herein.

4. Above items shall be staked out and any deviation from Drawings and Specifications shall be reviewed and approved by the Architect and CM prior to installation.

3.4 INSTALLATION

A. Layout:

1. Lay out work as accurately as possible in accordance with the Drawings.
2. Where site conditions do not permit locating piping, valves, and heads where shown, notify the Architect and CM immediately, and do not proceed until instructions are obtained.

   Do not trench through roots greater than 1" in diameter under existing tree canopies.
3. Run pipe lines in common trenches wherever practical.
4. Notify the Architect and CM of any aspects of layout which will provide incomplete or insufficient water coverage of plant material, and do not proceed until his instructions are obtained.
5. Locate all underground utility lines prior to excavating irrigation, and bring any conflicts to the attention of the Architect and CM.
6. Do not proceed with the work until instructions are received from the Architect and CM.

B. Protection:

1. Protect existing and new work at all times.
2. Any existing buildings, equipment, piping, pipe coverings, sewers, sidewalks, landscaping, etc., damaged by the Contractor during the course of his work shall be replaced or repaired by the Contractor in a manner to return to prior condition, at the Contractor's own expense and before the final payment is made.
3. The Contractor shall be responsible for damage caused by leaks in the piping systems being installed or in having been installed by him. He shall make good any damage so caused at his own expense.

C. Excavating and Trenching:

1. Excavation shall be in all cases ample in size to accommodate bedding material, to permit the pipes to be laid at the elevations intended, and to permit ample space for joining.
2. Make trenches for pipelines deep enough to provide minimum cover from finish grade as follows:

a. 18-inch minimum cover over mainlines, except under paving where it shall be 24" inches with sand backfill.

b. 12-inch cover over head lateral lines, except under paving where it shall be 24" inches with sand backfill.

3. Trenches shall be straight with bottoms at uniform slopes.

4. Underground lines shall have a minimum horizontal clearance of 2 inches from each other.

a. All lines shall have a minimum horizontal clearance of 12 inches from the lines of other trades. (This requirement does not apply to any lines crossing at angles from 45 to 90 degrees with each other).

b. A minimum 1-inch vertical clearance shall be maintained between lines which cross between these angles.

5. No line shall be installed parallel to and directly over another line.

6. Restore surfaces, existing underground installation, etc., damaged or cut as result of excavations, to original conditions.

7. Where irrigation lines interfere with other utilities, irrigation, trenching, and pipe work, adjust the trench depth as directed by the Architect and CM.

D. Assembling Pipelines:

1. All pipe shall be assembled free from dirt and pipe scale. Field-cut ends shall be reamed to remove rough edges and burrs.

2. Solvent-Weld Joint

a. Prepare joint by first making sure the pipe end is square, then deburring pipe end and cleaning pipe and fitting of dirt, dust, and moisture.

b. Dry insert pipe into fitting to check for miss-sizing; pipe should enter fitting one-third to one-half the depth of socket.

c. Solvent Cement and Primer: Make and type approved by manufacturer(s) of pipe and fittings; cement shall be maintained at proper consistency throughout use.

d. Coat the inside socket surface of fitting and external surface of male end of pipe with primer.

e. Then, without delay, apply cement liberally to male end of pipe and also apply cement lightly to inside of socket.

f. At this time apply a second coat of cement to the pipe end.

g. Insert pipe immediately into fitting and turn one-quarter turn to distribute cement and remove air bubbles.

Pipe must seat to bottom of socket and fitting.

Check alignment of fitting.

Pipe and fittings shall be aligned properly, without strain to either.

3. Hold joint still for approximately 30 minutes before handling and at least 6 hours before allowing water in pipe and backfilling trench.

E. Thrust Blocks: Not Applicable

F. Threaded Joints for Plastic Pipe:

1. Field threading of plastic pipe or fittings is not permitted; factory-formed threads only will be permitted.
2. Where assembling to threaded plastic fitting, take up joint no more than one full turn beyond hand tight and apply nylon thread tape.
3. Use strap-type friction wrench only; do not use metal-jawed wrench.

G. Threaded Joints for Galvanized Steel Pipe - Not Applicable

H. Laying Pipe:

1. Bed in at least 2 inches of finely divided material with no rocks or clods over 1 inch in diameter to provide a firm uniform bearing.
2. PVC pipe shall be snaked from side to side of trench bottom to allow for expansion and contraction. One additional foot per 100 feet of pipe of the minimum allowance for snaking.
3. Do not lay pipe where there is water in trench or when temperature is 32 degrees F. or lower.
4. Cap or plug openings as pipeline is assembled to prevent entrance of dirt or obstruction. Remove caps or plugs only when necessary to continue assembly.
5. Where pipes pass through sleeves, provide removable nondecaying plug at ends of sleeve to prevent entrance of earth.

I. Remote Control Valves:

1. Remote Control Valves to be as shown on Drawings. Label all Valves (1, 2, etc…)
2. Install where shown and group together where practicable; limit one RCV per valve box.
3. Locate valves no closer than 12 inches from walk edges, buildings, and walls.
4. Thoroughly flush mainline before installing valve.
5. Place all control valves in valve box.

a. Use Extensions as necessary to keep soil away from valves and solenoids.

b. No soil shall be allowed around valve.

c. Fill in area below valve with pea gravel.

d. Attach a 2-inch-diameter aluminum identification tag with valve numbers stamped on it to each valve; secure with wire.

J. Automatic Control Wiring:

1. Run lines along main wherever practicable.

2. Tie wires in bundles with pipe-wrapping tape at 10-foot intervals, and allow slack for contraction between strapping.

3. Loop minimum of 2 (two) feet of extra wire in each valve box; both control wire and ground wire.

4. Connections shall be made with twist-type (wire nut) connectors and sealed with epoxyresin sealer packs.

5. Splicing will be permitted only on runs exceeding 2,500 feet.

   Locate all splices at valve locations.

6. Each control valve shall be connected to its respective controller with its own individual control wire. Common ground wire shall be common to only those valves controlled by each individual controller.

K. Flushing Lines:

1. Flush all rock, sand, and debris from the lines.

2. Flush mainlines prior to installing valves and connecting lateral lines.

3. Flush long dead-end runs prior to capping pipe.

4. Flush lateral lines prior to installing heads.

5. Continue flushing process with water running slowly as heads are installed, starting closest to valve and working outward.

L. Testing Pipe:

1. Pipe shall be center loaded with sufficient backfill in accordance with the paragraph on backfilling to anchor pipe before testing.

2. No fittings shall be covered during testing.

3. No testing shall be done until the last solvent welded joint has had twenty-four (24) hours to set and cure.

4. Install control valves prior to testing.

5. Notify the CM at least three (3) days in advance of testing.

6. Tests will be observed and approved by the CM.
7. Perform testing and furnish all equipment for testing of work of this Section.
8. Apply the following tests after solvent-weld plastic pipe joints have cured at least 24 hours.
    a. Test mainlines hydrostatically at 125 psi minimum. Lines will be approved if test pressure is maintained for 24 hours.
    b. Test lateral lines with water at line pressure, and visually inspect for leaks.
    c. The Contractor shall make tests and repairs as necessary until test conditions are met.
    d. Retest after correcting defects.

M. Backfilling Pipe:

1. Do not backfill until pipe has been tested and approved by the Architect.
2. Backfill materials shall be like material excavated.
    a. Backfill to depth of 6 inches above top of pipe shall be finely divided material free of rocks or clods over 2 inches in diameter.
    b. Remaining backfill shall be free of rocks and clods over 2 inches in diameter.
    c. Place backfill in 6-inch lifts, and compact by tamping as follows:

        Planting Areas: Percentage equal to adjacent soil.

        Under Paving: Percentage to that specified for the paving subgrade and base material.

N. Automatic Controller:

1. Existing 2 controllers - remove and coordinate all existing valves with new controllers
2. New controller
    a. as shown on the drawings

O. Backflow Prevention: locate directly behind POC

P. Coverage Test:

1. When the irrigation system has been completed, a coverage test shall be performed in the presence of the Architect to determine if coverage of water afforded planting areas is complete.

2. Make minor changes in heads and head location to provide adequate coverage at no additional cost to the County.

Q. System Tests:

1. Prior to final acceptance, the irrigation system shall be tested and inspected for correctness of coverage in the presence of the CM. All inadequate coverage will be corrected before final acceptance.

R. As-Builts:

1. Provide and keep up to date a complete "Record" set of blueline prints, which shall be corrected daily, and show every change from the original Drawings and Specifications as well as dimensioned locations of pipe and equipment. Issue pdfs of all as-builts on compact disc (CD). Submit five (5) CDs and five (5) sets of blueline prints.

2. This set of Drawings shall show dimensions of all mainlines and gate valves from the nearest structure.

   "Record" Drawings shall show dimensions of all mainlines and gate valves from the nearest structure.

3. These Drawings shall also serve as work progress sheets, and neat and legible annotations shall be made daily as the work proceeds, showing the work as actually installed.

S. Wrenches, Keys, and Couplers:

Provide the County at completion of the planting maintenance period with three each of all operating and servicing keys and wrenches required for complete maintenance and operation of all valves. Include all wrenches necessary for complete disassembly of all valves.

3.5 WARRANTY

A. Repair of Damage: All damage to paving, planting, structures, and other improvements due to settlement of improperly compacted trench backfill shall be promptly repaired to the satisfaction of the County's Representative and without additional expense to the County.

B. All materials and workmanship shall be as specified and shall for minimum period of one (1) year.

C. At the end of this period all required repairs and adjustments, including adjustment to grade shall be made including all repairs to other work made necessary thereby, without additional expense to the County.

D. Present to the CM at time of final acceptance, warranties for all materials used.

END OF SECTION

SECTION 032 - PLANTING: LANDSCAPE WORK

1.0 GENERAL

1.1 SUMMARY

NOTE: Work is to be performed on the existing Library site and will include relocation of the 5 existing Magnolia Stellata trees, demolition of existing landscape planting and irrigation as noted, removal of walkways.

A. This Section includes all labor, materials, equipment, operations, or methods listed, mentioned, or scheduled on the plans and/or herein specified, including all incidentals necessary and required for completion of work under this Section.

B. Provide and install all landscaping as shown on project Drawings and as specified herein, including all planting and maintenance under a ninety (90) calendar-day maintenance period (see part 3.8 of this Section).

1.2 RELATED SECTIONS

A. Documents affecting work of this Section include, but are not necessarily limited to, General Conditions, Special Conditions and Section 01 of these Contract Documents.

B. County of Monterey General Conditions Bid # 10165 Project Manual Part I, Construction Specifications / Technical Specifications (Division 1 thru 16) for Project # 8810.

C. Section 033 – Irrigation

1.3 GENERAL CONDITIONS

A. The contractor shall maintain adequate protection of his work from damage and shall protect the County's and adjacent property and related appurtenances from injury or loss arising from this Contract. Damaged or disturbed items shall be replaced with equal by the Contractor at no cost to the County.

B. The Contractor shall pay Federal, State, and Local Sales and/or Use Taxes to materials, processes, or devices purchased or used in connection with the work. Local, Municipal, and State Laws and Rules and Regulations governing or relating to any portion of this work are hereby incorporated into these Specifications.

1.4 PERMITS, LICENSES, AND INSPECTIONS

A. Any permit, license and/or inspection required by the legal authorities or agencies having jurisdiction over the construction or installation of the work as shown on the Plans or specified herein, shall be paid and obtained by the Contractor at the proper time.

1.5 BONDS AND INSURANCES

A. The Contractor shall furnish the appropriate bond(s) in the amount of the required per cent of his bid proposal and carry insurance as required by the County. The Contractor shall be informed of these requirements from the County prior to submitting his bid proposal.

1.6 EXISTING CONDITIONS

A. The Contractor shall visit the subject site to review the various existing conditions. A condition found to deviate from the Plans and Specifications shall be reported to the County's Authorized Representative prior to submitting his bid proposal.

1.7 PURPOSE OF DOCUMENTS

A. The intent of the documents is to include, unless otherwise stated, the labor, materials, equipment, appliances, and transportation for the proper execution of the work as required for complete construction as shown on the Plans and specified herein. The Contractor shall be responsible for complete layout of improvements as shown on the Plans and as specified herein. Written dimensions shall take precedence over scaled dimensions. Follow as closely as practical making no alterations unless prior review and appropriate action is taken by the County's Authorized Representative.

B. Each plant shall be installed in locations as shown on the Plans. Plants improperly located shall be relocated at no additional cost to the County. Notwithstanding is the fact that these documents may be deficient in setting forth a complete detailed description of the work to be done.

1.8 RECORD DRAWINGS

A. On one set of the Plans, the Contractor shall record accurately changes in the work which constitute departures from the original Contract Drawings. The Contractor shall dimension from two permanent points of reference (building corners, sidewalks, or road intersections, etc.) the location of the following items:

1. Connections to existing water lines

2. Routing of pressure supply lines

3. Sprinkler control valves

B. Upon completion of each increment of work, the Contractor shall transfer information including the dimensions to a clean set of prints of the Plans and the changes. The dimensions and changes shall be recorded in a legible and workmanlike manner to the satisfaction of the County's Authorized Representative. Prior to stage acceptance, these Plans shall be presented to the County's Authorized Representative for review.

2.0 PRODUCTS

2.1 MATERIALS

A. Plant Material:

a. Plants and planting material shall meet the specifications of Federal, State, and County laws requiring inspection for plant disease and insect control. Inspection certificates required by law shall accompany shipments, of which a copy of each inspection certificate shall be given to the County.

b. Plants shall be true to botanical name and one of each bundle or lot shall be tagged with the botanical name and container size of the plants in accordance with the standards of practice recommended by the American Association of Nurserymen.

c. Plants shall be healthy, vigorous stock, free of insects and disease, and not root-bound. Quality and size shall conform with the current edition of “Horticultural Standards” for number one grade nursery stock as adopted by the American Association of Nurserymen. Plants which are not true to botanical name shall be removed from the site and replaced with acceptable plants at no extra cost to the County. Botanical names shall take precedence over common names.

d. Due to ever changing availability of plant material, the Contractor may submit plant type substitution requests to the County's Authorized Representative for review, prior to ordering.

B. Sod Material:

1. Grower: Grass Farm, Morgan Hill, CA (1-800 529-6763), or approved equal.

2. Material: Double Dwarf Champion

3.0 EXECUTION

3.1 PREPARATION

A. Finish Grading:

1. Planting areas shall be graded to the elevations indicated on the site plan. Grades not otherwise indicated shall be uniform levels or slopes between points where elevations are given. Minor adjustments of finish grades shall be made at the direction of the County's Authorized Representative, if required, at no additional cost to the County.

2. Finish grade shall be smooth, even, and of a uniform plane with no abrupt changes of surface. Soil area adjacent to buildings shall slope away from the buildings to allow a natural runoff of water, and surface drainage shall be directed as indicated on the drawings by remodeling surfaces to facilitate the natural runoff of water. Low spots and pockets shall be graded to drain properly.

3. Shrub areas: The finish grade of shrubbery areas shall be 1-1/2 inches below the grade of adjacent pavement, walks, curbs, header, or walls. An exception to the above requirements shall be made wherever drainage conditions may require flush grade.

B. Soil Preparation:

1. Prior to planting, Contractor shall obtain soils test from certified soil testing lab and send copy to Architect. Commercial fertilizer shall be as per recommendations of soils lab. It shall be delivered to the site in bags labeled with manufacturer's guaranteed analysis. If stored at the site, fertilizer shall be protected from the elements prior to use.

2. Organic Soil Amendment (OSA): Shall be nitrogenized fine grained Redwood sawdust, or approved equal. The Contractor shall submit samples to the Architect for review prior to ordering of material. Particle size, mix proportions, Ph, and salinity content shall conform to manufacturer's literature.

3. Backfill Mix for Shrubs and Trees: Shall consist of 70% native soil excavated from the planting holes (free of rock/debris 1 inch or greater in size), 30% nitrogenized redwood sawdust (OSA), and the following additional amendments:

Soil Amendments

Container Size	Soil Fertility
1. Shrubs (1, 5, & 15 gallon)	1. As per soils lab recommendation
2. Trees (5 & 15 gallon & 24" box)	2. As per soils lab recommendation

4. Using a rotary-cultivator, thoroughly till three inches of OSA a minimum of two passes of all areas six inches deep in two directions 90 degrees to each other including all areas that include shrubs only.

Rake entire area to remove clods and stones over one inch in diameter, and sticks, etc. Maintain adequate distance from mud sills in accordance with local codes.

C. Planter Preparation

1. Excavate planter areas and tree wells in paved interior to a depth of 10" or below paving base rock, which ever is deeper.
2. Dispose of all base rock from planter areas off site.
3. Back fill planters with top soil. Submit source and sample to Architect prior to installation.
4. Back fill into existing sub soil to a depth of 6" to create a transitional layer of soil.
5. Water down and lightly compact topsoil to remove air pockets and achieve specified grade

3.2 SHRUB AND TREE PLANTING

A. Excavation of planting holes shall be a minimum of twice the depth and diameter of the plant root ball.

B. Sides and the bottom of the planting hole shall be thoroughly “broken up” and loosened so that no “auger slick” or compaction of soil exists.

C. Planting trees: minimum 1" per hour drainage from planting pit. If not achieved, notify Architect.

D. Fill holes with amended backfill mixture to the proper height to receive the plant and thoroughly tamp the mixture.

E. Lightly loosen the outer edge of the root ball soil and set the plant in the center of the hole.

F. Compact backfill mixture around root ball until 2/3 of the hole is filled, then water thoroughly.

G. Place remaining backfill in hole so that crown of plant is 1-1/2" to 2" above surrounding grade.

H. A four-inch-high water basin shall be constructed around each shrub and tree as per detail on the Plans (except when plant is located within turf area).

I. Each plant basin shall be mulched by applying nitrogenized redwood sawdust to a depth of two inches, evenly spread over the entire basin area and soaked thoroughly. Then all planting areas will be mulched/top dressed.

J. Trees to be planted in interior paved walkways as indicated on the drawings shall be planted with deep-root planters with perforated pipe and sock for aeration.

3.3 INSTALLATION OF TOP DRESSING

A. Following all plant material planting, refined raking of finish grades, application and watering-in of weed control treatment, all shrubs, tree areas and/or ground cover areas shall be top dressed.

B. All top dressing will be Earth Tones Mulch Pro Chip (50% Mahogany, 50% Dark Brown) or approved equal. Contractor shall submit samples to County's Authorized Representative for review and appropriate action. Maximum chip size shall be 1/2" diameter of uniform color and consistency.

C. The Contractor shall spread the top dressing a minimum of 2 inches deep over all areas, and shall uniformly rake so as to create a smooth plane. Neat uniform appearance of all top dressing shall be maintained at all times and is solely the responsibility of the contractor.

3.4 SOD INSTALLATION

A. Preparation:

1. Remove dead and decaying vegetation, sticks, stones and debris over 1/2" in diameter. Dispose of off site at the time of removal.
2. Rototill the soil to a minimum depth of 8 inches.
3. Apply soil amendments evenly over area to be sodded and thoroughly incorporate into the soil to a depth of 6 inches (amendments specified as per soils analysis).
   a. Amount per 1000 sq. ft.:

      3 cubic yards nitrogen stabilized organic amendment.

      15 lbs. Ironite 92% iron, 1-0-0.
4. Trench for irrigation system; refer to Section 328000, Irrigation.
5. Compact soil with a roller to achieve 85% compaction.
6. Fine grade area to achieve a smooth continuous finish grade, fill all low spots and undulations.

B. Sod Installation:

1. Apply pre-plant fertilizer, per the soil testing recommendation, to prepared soil bed.

2. Lay sod uniformly and with tight seams between rolls. Do not overlap or leave gaps. Bevel root mat of rolls where they join.
3. In hot weather above 85 degrees, water lightly after each 200 sq. ft. installed.
4. Once sod is installed, water lightly, then roll sod to bring turf into close contact with prepared soil.
5. Immediately after sod installation, water to a depth of 6". For the next 6-10 days keep the sod moist (not flooded) at all times.

C. Mow:

1. First mow at height of greater than 2" less than 3".
2. For all subsequent mowings, the mower should be set at 1-1/2".

3.5 STAKING AND GUYING TREES

A. Trees shall be staked as per details on the Drawings.

B. Tree stakes shall be treated Lodge Pole Pine: two, 2 inch in diameter, 10 feet long for 15 G.C./24" box size trees; 3 inch in diameter, 12 foot poles for 36 inch box or larger.

C. Trees shall be tied as per tree staking detail. Over-sized trees shall have 12' poles and two or more ties, as determined by the Architect.

D. Staking poles shall not interfere with the lateral branching of trees.

3.6 SOD MAINTENANCE

A. General: After areas have been prepared, no heavy objects (except rollers) shall be taken over the area at any time. In the event that heavy equipment does compact the soil, the Contractor shall be required to cultivate any areas thus compacted at his/her own expense.

B. Sod shall be watered, edged and mowed as required to assure a neat appearance and a healthy and vigorous growth from the day of installation to the end of the maintenance period.

C. Maintenance shall be for a period of 3 months or until the County finds the sod acceptable.

3.7 WEED CONTROL

A. Shrub and/or ground cover areas shall be weed-free with acceptable pre-emergent herbicide.

B. Prior to laying down of mulch/top dressing, a letter stating that the work has been completed shall be signed and verified by the Architect and delivered by the Contractor to the County.

3.8 CLEAN-UP

A. After planting and irrigation operations have been completed, the Contractor shall remove trash, empty plant containers, and tools and equipment used in this work, or any other debris accumulated by the work, as specified herein, from the site of the work.

B. Scars, ruts, or other marks in the area caused by this work shall be repaired at the Contractor's expense, and the ground left in a neat and orderly condition throughout the site or work at no additional cost to the County. All hardsurface paved areas shall be thoroughly cleaned.

3.9 FIELD OBSERVATIONS AND ACCEPTANCE

A. The County's Authorized Representative shall perform at least two project field observations upon completion of each phase of the work. Field observations shall be arranged by the Contractor by notification to the County's Authorized Representative two days prior to field observation date.

1. The first field observation shall take place upon completion of the designated maintenance period. Discrepancies noted by the County's Authorized Representative must be corrected and written notice of completion of remedial work delivered to the County prior to the next field observation.

2. The second field observation will take place upon completion of all remedial work. If the job is satisfactory and to the best of the County's Authorized Representative's knowledge, information, and belief, that the work is carried out in general conformance with the Plans, Specifications, and Contract, and general design intent, a written notice of final review shall be prepared by the County's Authorized Representative and submitted for stage approval to the County, prior to termination of the maintenance period and stage acceptance. The County shall issue stage acceptance to the Contractor.

B. If the job is **NOT** satisfactory, the Contractor shall continue the maintenance period at no cost to the County until stage acceptance by the County has been issued.

C. Irrigation:

1. Field observation of final pressure rating of mainline testing and observation of pressurized lateral line tests.

2. Field observation of irrigation coverage test.

3. Field observation of overall irrigation system operation and compliance with the plans and installation procedures as specified herein.

D. Planting:

1. Field observation of final finish grading to review drainage and general appearance before planting.
2. Field observation of plants in containers prior to planting.
3. Field observation of plant locations to review general conformance with the Plans and planting procedures as specified herein.

3.10 MAINTENANCE

A. It shall be the sole responsibility of the Contractor to maintain grades, planting, and irrigation as specified herein through stage acceptance by the County and review by the County's Authorized Representative. Maintenance shall include responsibility for losses due to neglect or vandalism, and continue for a full 90 calendar days initiating after the job is fully completed and written notice of start of maintenance is received from the County.

B. Finish grade shall be maintained to facilitate run-off with silt build-up at back of walk and headers removed.

C. Irrigation system to be checked minimum once a week, heads lowered or raised as needed. Leaks, damage, and/or settling shall be repaired immediately.

D. Plantings shall be weeded, fertilized, cultivated, sprayed, and pruned as necessary to produce a healthy plant specimen.

E. Irrigation shall be checked, heads adjusted for coverage and over-spray, no water on buildings, walks, parking areas, etc. Controller shall be labeled to location of valves per Irrigation Plans.

F. Guarantee of planting and irrigation for one calendar year shall commence at the time of stage acceptance by County or his Authorized Representative.

3.11 GUARANTEE PERIOD

The guarantee period will commence upon issuance of stage acceptance by the County to the Contractor at the termination of the maintenance period.

A. Planting Guarantee

1. The Contractor will guarantee the planting (as specified herein) for a period of one calendar year. The signing of the Contract for work is considered as the written guarantee to carry out this provision.
2. Plant material which is lost due to improper planting or plant diseases or pests which were present at the time of the start of the guarantee period shall be replaced by the Contractor at no cost to the County.

B. Completion of Guarantee Period and Final Acceptance

1. A final field observation will take place upon completion of the designated guarantee period.
2. Discrepancies noted by the County's Authorized Representative, which are a direct cause of the Contractor's work as shown on the Plans and specified herein, shall be made correct and complete to the satisfaction of the County at no additional cost to the County.

END OF SECTION

March 15, 2018
Project PA18.1016.00

Robin Blair
Weston Miles Architect
17500 Depot Street, #120
Morgan Hill, California 95037

Subject: Geotechnical Update, Proposed Morgan Hill Library Expansion, 660 West Main Avenue, Morgan Hill, California

Dear Ms. Blair,

This letter presents our updated geotechnical findings, conclusions, and recommendations for the proposed Morgan Hill Library Expansion project. In 2001, our firm (formerly as Pacific Geotechnical Engineering) performed a geotechnical investigation for the Morgan Hill Library project. In 2006 and 2007, our representatives observed and tested during earthwork and foundation construction of the project. The following documents were previously prepared by our firm for the library project.

- A report titled "Geotechnical Investigation, Morgan Hill Public Library, West Main Avenue and DeWitt Avenue, Morgan Hill, California," dated November 30, 2001

- A letter titled "Geotechnical Plan Review and Supplemental Recommendations, New Morgan Hill Library, West Main Avenue and DeWitt Avenue, Morgan Hill, California," dated January 11, 2006

- A letter titled "Foundation Pier Excavation Observations, Morgan Hill Library, West Main Avenue and DeWitt Avenue, Morgan Hill, California," dated September 19, 2006

- A letter titled "Field Density Observations and Testing, Morgan Hill Library, West Main Avenue and DeWitt Avenue, Morgan Hill, California," dated July 31, 2007

1. PROPOSED PROJECT

The library expansion project will involve construction of building additions in the northwestern and main entrance portions of the existing library. Associated improvements will include new underground utilities, reconfiguration of the existing parking lot, and construction of a new path from the library to Dewitt Avenue. Cuts and fills on the order of 1 to 2 feet will generally be required to achieve design pad grade of the additions except along the west side of the northwestern addition where the addition will encroach the existing slope along Dewitt Avenue. The existing slope will be cut back to create a new cut slope up to about 8 feet high.

Construction of the new path from the library site to Dewitt Avenue will require cuts up to about 4 feet below existing grades.

2. INFORMATION PROVIDED

Weston Miles Architect provided us with a 97-sheet set of drawings titled "Morgan Hill Library Expansion, Construction Drawings," dated February 1, 2018.

3. PURPOSE AND SCOPE OF SERVICES

The purpose of our work was to update our 2001 geotechnical report, in particular the California Building Code (CBC) seismic design parameters, liquefaction assessment, and geotechnical recommendations for the proposed additions. The following work was performed for this geotechnical update.

1. Performed a site reconnaissance to update the site surface conditions.

2. Reviewed our 2001 geotechnical report.

3. Developed the seismic design parameters and peak ground acceleration based on the 2016 CBC requirements.

4. Performed a liquefaction assessment based on the current building code peak ground acceleration value.

5. Updated our geotechnical recommendations for the library expansion.

6. Prepared this geotechnical update letter.

4. FINDINGS

4.1 Site Surface Conditions

The site of the proposed addition at the main library entrance is essentially flat and covered with concrete flatwork. There is an overhead trellis.

The site of the proposed northwestern addition is currently covered with grass and exterior flatwork. The area is essentially level except along its west side where the ground slopes up to Dewitt Avenue. There are isolated trees and bushes, and a stairway from the library parking lot up to Dewitt Avenue.

4.2 Anticipated Subsurface conditions

No subsurface exploration was performed for this update. The information below is based on subsurface exploration performed during our 2001 geotechnical investigation which included a

total of ten exploratory drill holes (DH-1 through DH-10). Drill hole DH-6 was located in the vicinity of the proposed main entrance addition and drill holes DH-1 and DH-8 were located in the vicinity of the proposed northwestern addition. The depths mentioned below are in reference to the existing ground surface at the time of our exploration in October 2001.

In DH-6, a layer of silty sand fill was encountered to a depth of about 2 feet. This fill was underlain by alluvium consisting of very stiff sandy clay to the maximum explored depth of about 10 feet.

In DH-1, we encountered alluvium consisting of layers of very stiff sandy clay, clay with sand, fat clay, and lean clay with sand to a depth of about 7 feet, medium dense clayey sand with gravel to a depth of about 11.5 feet, and layers of hard lean clay with sand, sandy lean clay, and clay with sand to the maximum explored depth of about 35 feet.

In DH-8, we encountered alluvium consisting of layers of very stiff clays with sand, fat clay, and sandy clay to the maximum explored depth of 20 feet.

4.3 Groundwater

Groundwater was reported in DH-1 at a depth of 26.5 feet at the time of our drilling in October 2001. After completion of drilling, a piezometer was installed in DH-1 for monitoring of groundwater level. The measured groundwater depths between October 2001 and February 2004 ranged between roughly 8 and 27½ feet. The groundwater level fluctuated seasonally, being higher during the wet winter months and lower during the drier summer months.

Perched groundwater may develop on the site based on its proximity to the base of the steep hillsides to the west.

It should be noted that fluctuations in the groundwater level may occur due to seasonal variations in rainfall and temperature, pumping from wells, regional groundwater recharge program, irrigation, or other factors that were not evident at the time of our investigation.

4.4 Variations in Subsurface Conditions

Our interpretations of soil and groundwater conditions, as described in this letter, are based on data obtained from our 2001 subsurface exploration and laboratory testing. Our conclusions and geotechnical recommendations are based on these interpretations. The project site has undergone previous development and grading, therefore, it is likely that undisclosed variations in subsurface conditions exist at the site, such as old foundations, abandoned utilities, and areas of deep and loose fill.

Careful observations should be made during construction to verify our interpretations. Should variations from our interpretations be found, we should be notified to evaluate whether any revisions should be made to our recommendations.

4.5 Seismic Sources

The San Francisco Bay Area is seismically dominated by the active San Andreas Fault system, the tectonic boundary between the northward moving Pacific Plate (west of the fault) and the North American Plate (east of the fault). This movement is distributed across a complex system of generally strike-slip, right-lateral, subparallel faults.

Regional faults that have a potential to generate large magnitude earthquakes and significant ground shaking at the site are listed below. Map distances are derived from the USGS Quaternary Fault and Fold database (http://earthquake.usgs.gov/regional/qfaults/).

Table 1: Name, Distance and Orientation of Earthquake Faults from Site

Fault Name	Approximate Distance (km)	Orientation from Site
Calaveras (central section)	7½ km	Northeast
Sargent	10½ km	Southwest
San Andreas (Santa Cruz Mts.)	14 km	Southwest
San Gregorio	52½ km	Southwest

The project site is not located within a Santa Clara County Fault Rupture Hazard zone.

4.6 Ground Motions and Seismicity

According to the 2016 CBC and ASCE 7-10, the spectral response acceleration at any period can be taken as the lesser of the spectral response accelerations from the probabilistic and deterministic ground motion approaches. We used the US Seismic Design Maps Application at the United States Geological Survey (USGS) website to determine the seismic design parameter values for design of buildings at the subject site. Two levels of ground motions are considered in the Application: Risk-targeted Maximum Considered Earthquake (MCE_R) and Design Earthquake (DE), with both probabilistic and deterministic values defined in terms of maximum-direction rather than geometric-mean, horizontal spectral acceleration. The probabilistic MCE_R spectral response accelerations are represented by a 5 percent damped acceleration response spectrum having a 1 percent probability of collapse within a 50-year period and in the direction of the maximum horizontal response. The probabilistic Design Earthquake (DE) S_a value at any period can be taken as two-thirds of the MCE_R S_a value at the same period.

Using the USGS Seismic Design Maps Application, the latitude and longitude of the site (latitude 37.12431^{o}N, longitude -121.66278^{o}W), and a Site Class C, the calculated geometric mean peak ground acceleration adjusted for site class effects (PGA_M) is 0.53g for the MCE_G (Geometric Mean Maximum Considered Earthquake). PGA_M is for use in evaluation of soil liquefaction, lateral spreading, seismic settlements, and other soil issues per ASCE 7-10. A Site Class C was used based on regional USGS data and subsurface information from our 2001 drill holes.

The Working Group on California Earthquake Probabilities' (WGCEP) estimates of the probabilities of major earthquakes are now in their sixth iteration, with the greatest changes in approach being the inclusion of multi-fault rupture scenarios, in the progressive consideration of more potential seismic sources, the possibility of earthquakes on unrecognized faults, and the inclusion of the notion of fault "readiness". Current estimates (WGCEP, 2014) for the San Francisco region indicate a 72% probability of a large (magnitude 6.7 or greater) earthquake in the San Francisco Bay area as a whole over the 30-year period beginning in 2014; this overall probability is greater than the previous (WGCEP, 2007) probability of 63%, due mainly to the inclusion of multi-fault rupture scenarios. The estimate for the Calaveras fault alone is 14.4% (revised up from the 7% presented by WGCEP, 2007); for the (northern) San Andreas fault alone, 27.4% (revised upward from the WGCEP (2007) value of 21%); and for the Hayward fault, 45.3% (revised upward from the WGCEP (2007) value of 31%).

4.7 Liquefaction

Soil liquefaction is a phenomenon in which saturated granular soils, and certain fine-grained soils, lose their strength due to the build-up of excess pore water pressure during cyclic loading, such as that induced by earthquakes. Soils most susceptible to liquefaction are saturated, clean, loose, fine-grained sands and non-plastic silts. Certain gravels, plastic silts, and clays are also susceptible to liquefaction. The primary factors affecting soil liquefaction include: 1) intensity and duration of seismic shaking; 2) soil type; 3) in-place relative density of granular soils; 4) moisture content and plasticity of fine-grained soils; 5) overburden pressure; and 6) depth to ground water.

The project site is not located in a Santa Clara County Liquefaction Hazard zone. Therefore, the potential for liquefaction at the site is considered to be low.

4.8 Seismic Design Parameters

The following site coefficients and seismic ground motion parameters are developed using the USGS Seismic Design Maps Application, the latitude and longitude of the site, and a Site Class C based on regional USGS information and data from our 2001 drill holes.

Parameter	Value - ASCE 7
Site Class	C
Site Coefficient F_a	1.0
Site Coefficient F_v	1.3
S_s	1.5g
S_1	0.6g
S_{Ms}	1.5g
S_{M1}	0.78g
S_{Ds}	1.0g
S_{D1}	0.52g

5. CONCLUSIONS AND DISCUSSION

5.1 Surface Fault Rupture

Because the project site is not located in a State of California Earthquake Fault Zone or a Santa Clara County Fault Rupture Hazard zone and no mapped active faults are known to cross the site, the probability of ground surface rupture at the project site is low.

5.2 Seismic Ground Shaking

The project site is located in an area of high seismicity. Based on general knowledge of the site seismicity, it should be anticipated that, during their useful life, the proposed additions will be subject to at least one severe earthquake (magnitude 7 to 8+) that could cause considerable ground shaking at the site. It is also anticipated that the site will periodically experience small to moderate magnitude earthquakes.

5.3 Soil Expansion Potential

Two Atterberg limits tests were performed on two clay samples during our 2001 investigation. The test results indicate the clays have moderate to high plasticity which generally corresponds to high to very high expansion potential. Expansion soils will expand with an increase in their water content and shrink with a decrease in their water content. Expansive soils can cause significant distress to structures constructed on them unless proper engineering mitigation is implemented.

In our 2001 report, recommendations were provided to mitigate the potential adverse effects of expansive soils. These recommendations include: 1) moisture conditioning and controlled compaction of the expansive soils; 2) supporting concrete slabs-on-grade on a minimum 18-inch thick section of “non-expansive” soil; and 3) supporting the building on drilled pier foundations with grade and tie beams.

For the proposed additions, the above recommendations should also be implemented to help reduce the potential adverse effects of expansive soils on the proposed additions. Refer to the “Recommendations” section of this letter.

5.4 Compressible Soils

The subsurface soils encountered in our 2001 drill holes consisted of stiff to hard clays and medium dense to very dense sands. Compressibility of these soils is generally low for the anticipated loads of the proposed additions.

5.5 Subsurface Drainage

In our 2001 geotechnical report, we mentioned that there has been a history of natural spring activity in the vicinity of the library site. There is also a potential for perched groundwater to develop at the library site based on its proximity to the steep hillsides to the west. Therefore,

in our 2001 report, subsurface drains were recommended along the north, west, and south sides of the library. For the proposed northwestern addition, subsurface drains should also be provided along its perimeter. Refer to the "Recommendations" section of this letter for specifics about the subsurface drains.

6. RECOMMENDATIONS

The following recommendations are for design and construction of the proposed library expansion project. These recommendations supersede those in our 2001 report.

6.1 Earthwork

6.1.1 Clearing and Stripping

Site clearing should include removal of designated deleterious materials, debris, and obstructions, including designated structures, foundations, concrete slabs, pavements, utilities, and landscaping. Stumps and primary roots of trees and brush, where present, should be removed. Roots about 1 inch or larger in diameter or about 3 feet or longer in length should be removed. Depressions, voids, and holes that extend below proposed finish grade should be cleaned and backfilled with engineered fill compacted to the recommendations below. The backfill operations should be observed and tested by the project Geotechnical Engineer.

Surface vegetation should be stripped to sufficient depth to remove the vegetation and organic-laden topsoil. Organic laden soils are defined as soils with more than 3 percent by weight of organic content. Stripped material may be stockpiled for use in future landscape areas if approved by the project landscape architect; otherwise, it should be removed from the site. For planning purposes, an average stripping depth of 3 inches may be assumed in vegetation areas. The actual stripping depth should be determined by the Geotechnical Engineer at the time of construction.

6.1.2 Excavations and Temporary Construction Slopes

Excavations for this project are expected to include demolition excavations, cuts to achieve design grades, trenching to construct new underground utilities, and foundation excavations. Excavation walls in clayey soil and less than 5 feet in height should be able to stand near vertical with minimal bracing, provided proper moisture content in the soil is maintained. Granular soils, with little or no cohesion, will require more extensive bracing or laying back because they are prone to sudden collapse. Excavations and temporary construction slopes should be constructed in accordance with the current CAL-OSHA safety standards and local jurisdiction. The stability and safety of excavations, braced or unbraced, is the responsibility of the contractor.

Trench excavations adjacent to existing or proposed foundations should be above an imaginary plane having an inclination of 1½:1 (horizontal to vertical) extending down from the bottom edge of the foundations.

6.1.3 Subgrade Preparation

Subgrade soil in areas to receive engineered fills, concrete slabs-on-grade, and pavements should be scarified to a depth of at least 8 inches, moisture-conditioned, and compacted to the recommendations given under the "Engineered Fill Placement and Compaction" section below. Prepared soil subgrades should be non-yielding. Subgrade preparation should extend a minimum of 3 feet beyond the outermost limits of the proposed improvements unless it is restricted by existing structures or improvements.

Moisture conditioning of subgrade soil should consist of adding water if the soil is too dry or allowing the soil to dry if the soil is too wet. After the subgrades are properly prepared, the areas may be raised to design grades by placement of engineered fill.

Soil with moisture content above optimum value should be anticipated in unpaved areas, under existing pavements and concrete slabs, during and after the rainy months, and in the northwestern addition area. Unstable, wet or soft soil will require processing before compaction can be achieved. If construction schedule does not allow for air-drying, other means such as lime or cement treatment of the soil or excavation and replacement with suitable material may be considered. Geotextile fabrics or geogrids may also be used to help stabilize the subgrade. The method to be used should be determined at the time of construction based on the actual site conditions. We recommend obtaining unit prices for subgrade stabilization during the construction bid process.

6.1.4 "Non-expansive" Fill

Concrete slabs-on-grade should be constructed on a layer of "non-expansive" fill at least 18 inches thick and meeting the requirements in the "Materials for Engineered Fills" section below.

6.1.5 Materials for Engineered Fills

In general, on-site soils with an organic content of less than 3 percent by weight, free of any hazardous, debris or deleterious materials, and meeting the gradation requirements below may be used as engineered fill to achieve project grades, except when special material (e.g. "non-expansive" fill and capillary break material) is required.

In general, engineered fill material should not contain rocks or lumps larger than 3 inches in greatest dimension, should not contain more than 15 percent of the material larger than 1½ inches, and should contain at least 20 percent passing the No. 200 sieve. In addition to these requirements, import fills, including "non-expansive" fill, should have a low expansion potential as indicated by Plasticity Index of 15 or less, or Expansion Index of less than 20.

All import fills should be approved by the project Geotechnical Engineer prior to delivery to the site. At least five (5) working days prior to importing to the site, a representative sample of the proposed import fill should be delivered to our laboratory for evaluation.

6.1.6 Engineered Fill Placement and Compaction

Engineered fill should be placed in horizontal lifts each not exceeding 8 inches in loose thickness, moisture conditioned to the required moisture content, and mechanically compacted to the recommendations below. Relative compaction or compaction is defined as the in-place dry density of the compacted soil divided by the laboratory maximum dry density as determined by ASTM Test Method D1557, latest edition, expressed as a percentage. Moisture conditioning of soils should consist of adding water to the soils if they are too dry and allowing the soils to dry if they are too wet.

Engineered fills consisting of the on-site clay soil should be compacted to between 87 and 92 percent relative compaction with moisture content between about 3 and 6 percent above the laboratory optimum value. Engineered fills consisting of soils of low expansion potential, including the "non-expansive" fill, should be compacted to at least 90 percent relative compaction with moisture content between about 1 and 3 percent above the laboratory optimum value.

In pavement areas, the upper 6 inches of subgrade soil should be compacted to at least 95 percent relative compaction with moisture content between 1 and 3 percent above the optimum value. Aggregate base should be compacted at slightly above the optimum moisture content to a minimum of 95 percent relative compaction.

Where fill will be placed on existing slope with an inclination of 5:1 (horizontal:vertical) or steeper, the fill should be keyed and benched into the existing slope. The toe key should extend a minimum of 2 feet into competent material and have a width of 6 feet or 1.5 times the width of the compaction equipment, whichever is wider. Toe key should slope toward the back at a minimum 2 percent gradient. Benches should be created by cutting a minimum of 6 feet into the existing slopes as the new fill is being placed. Vertical spacing of benches should not be more than about 6 feet. If approved by the Geotechnical Engineer depending on exposed site conditions, soil cut out from the benches may be mixed and compacted with the new fill.

6.1.7 Cut and Fill Slopes

Final cut and fill slopes should be constructed at inclinations no steeper than 2.5 to 1 (horizontal to vertical). Concrete slabs-on-grade and pavements should be set back at least 3 feet horizontally from the crests of cut and fill slopes. Fill slopes should be over-built and then trimmed back to their final configurations to allow for compaction of the entire slopes.

6.1.8 Utility Trench Backfill

Construction of underground utility trenches should comply with the City of Morgan Hill standards, latest edition. In general, pipe bedding, extending from the bottom of the trench to about 1 foot above the top of pipe, may consist of free-draining sand (less than 5% passing a No. 200 sieve), lean concrete or sand cement slurry. Sand bedding should be compacted to a minimum of 90 percent relative compaction.

Above the pipe bedding, utility trenches may be backfilled with on-site soil or imported soil. Trench backfill above the pipe bedding should be compacted to the requirements given in the section of "Engineered Fill Placement and Compaction." Trench backfill should be capped with at least 12 inches of compacted, on-site soil similar to that of the adjoining subgrade. The backfill material should be placed in lifts not exceeding about 6 inches in uncompacted thickness. Thinner lifts may be necessary to achieve the recommended level of compaction of the backfill due to equipment limitations. Compaction should be performed by mechanical means only. Water jetting or flooding to attain compaction of backfill should not be permitted.

For trenches crossing the building perimeter, the full depth of the trenches within 2 feet on both sides of the perimeter foundations should consist of compacted clayey soil to reduce the potential for water infiltrating to under the building.

6.1.9 Wet Weather Construction

If site grading and construction is to be performed during the winter rainy months, the owner and contractors should be fully aware of the potential impact of wet weather. Rainstorms can cause delay to construction and damage to previously completed work by saturating compacted pads or subgrades, or flooding excavations. The potential for high groundwater during and after the winter rainy months would also affect construction of the project.

Earthwork during rainy months will require extra effort and caution by the contractors who should be responsible to protect their work to avoid damage by rainwater. Standing water should be pumped out immediately. Construction during wet weather conditions should be addressed in the project construction bid documents and/or specifications. We recommend the grading contractor submits a wet weather construction plan outlining procedures they will employ to protect their work and to minimize damage to their work by rainstorms.

6.2 Building Foundations

The proposed library additions should be supported on drilled, cast-in-place, reinforced concrete piers designed to derive their vertical supporting capacity from "skin friction" between the pier shafts and the surrounding earth materials. Piers should have a diameter of 12 inches or greater and should extend at least 8 feet below the ground surface. Center to center spacing of the piers should be a minimum of 3 pier diameters. Reinforcement in the piers should be determined by the structural engineer.

For dead plus live vertical loads, a net allowable adhesion value of 500 pounds per square foot may be assumed along the pier shafts. This value may be increased by one-third when including transient loads, such as wind or seismic. The upper 1 foot of the piers below lowest adjacent finish grade should be neglected when calculating vertical pier capacity. End bearing capacity should also be ignored.

Resistance to lateral loads may be calculated based on passive soil pressure acting against the piers. For dead plus live loads, the ultimate passive resistance in soil or engineered fill may be

calculated using an equivalent fluid weight of 300 pounds per cubic foot acting on 2 times the pier diameter, for level ground surface in front of the piers in the direction of load application. The upper 1 foot of soil below lowest adjacent finish grade should be ignored in the calculation of passive pressure. It should be noted that passive resistance is only applicable where the concrete is placed directly against undisturbed soil or engineered fill.

Perimeter piers should be structurally tied with grade beams for the foundation to act as one structural unit. Grade beams should be designed to span between piers and should be embedded at least 12 inches below pad grade. Uplift pressure from the underlying expansive soil may be reduced by providing a minimum 4-inch deep void below the bottom of the grade beams. This void may be constructed using cardboard form, or equivalent.

Prior to placement of reinforcing steel and concrete, the pier holes should be cleaned of loose soil and debris. If water is encountered in the pier holes, concrete should be placed using the "tremie" method to displace the water to the surface.

The Geotechnical Engineer should observe during drilling of the foundation piers to evaluate whether the pier holes are in suitable bearing material.

6.3 Concrete Slabs-on-grade

The building floor slabs should be constructed on a layer of "non-expansive" fill at least 18 inches thick, underlain by moisture-conditioned and compacted subgrade soil complying with recommendations in the "Earthwork" section above. Slab subgrades should be maintained in a moist condition prior to placement of slab concrete. Design of slab reinforcement, joint spacing, etc. is the responsibility of the structural engineer.

Interior concrete slabs-on-grade that will be covered with floor coverings or where vapor transmission through the slabs is undesirable should be underlain by at least 4 inches of capillary break material such as free-draining, clean drain rock or 3/8 inch pea gravel. A visqueen should be placed over the capillary break material. The visqueen should be a high quality polymer at least 10 mils thick that is resistant to puncture during slab construction. Typically, the membrane and the slab are separated by 2 inches of sand; but the use of sand should be determined by the project structural engineer. This capillary break material and sand (if used) should <u>NOT</u> be considered as a part of the recommended "non-expansive" fill.

A lower water-cement ratio (0.45 to 0.50) will also help reduce the permeability of the floor slab. It should be understood that the recommended plastic membrane is not intended to waterproof the concrete slab floor. If waterproofing is desired, the project designers and/or a flooring expert should be contacted.

6.4 Surface Drainage

Engineering design of grading and drainage at the site is the responsibility of the project Civil Engineer. We recommend the following for consideration by the project Civil Engineer.

Sufficient surface drainage should be provided to direct runoff away from structures, foundations, concrete slabs-on-grade, and pavements, and towards suitable collection and discharge facilities. Ponding of surface water should be avoided by establishing positive drainage away from all improvements. Water collected should be discharged at a suitable discharge point.

6.5 Subsurface Drainage

As discussed in Section 5.5 above, subsurface drains are recommended along the perimeter of the proposed northwestern addition. The subdrains should extend to at least 36 inches below the exterior finish grade and be at least 12 inches wide. The subdrains should be filled with drainage material consisting of either Class 2 Permeable material (Caltrans Standard Specifications, Section 68) or clean, ½ to ¾-inch maximum size crushed rock. If crushed rock is used, it should be encapsulated in a geotextile filter fabric, such as Mirafi 140N or equivalent. Filter fabric is optional if Class 2 Permeable material is used. The upper 1 foot below finish grade should be backfilled with compacted clayey soil to reduce infiltration of surface water into the drains.

A 4-inch diameter, perforated, schedule 40 PVC (or equivalent) pipe should be placed with perforations facing down on a 3-inch thick bed of drain rock in the bottom section of the subdrains. The pipes should be sloped to drain by gravity to a proper collection system and be discharged at a proper outlet as designed by the project Civil Engineer.

7. LIMITATIONS

In preparing the findings and professional opinions presented in this letter, Geo-Logic Associates (GLA) has endeavored to follow generally accepted principles and practices of the geotechnical engineering professions in the area and at the time our services were performed. No warranty, express or implied, is provided.

The conclusions and recommendations contained herein are based, in part, on information that has been provided to us. In the event that the general development concept or general location and type of structures are modified, our conclusions and recommendations shall not be considered valid unless we are retained to review such changes and to make any necessary additions or changes to our recommendations. To remain as the project geotechnical engineer-of-record, GLA must be retained to provide geotechnical services during construction of the project.

Should conditions different from those described in this letter be encountered during project development and construction, GLA should be consulted to review the conditions and

determine whether our recommendations are still valid. Additional exploration, testing, and analysis may be required for such evaluation.

Should persons concerned with this project observe geotechnical features or conditions at the site or surrounding areas which are different from those described in this letter, those observations should be reported immediately to GLA for evaluation.

Sincerely,

Geo-Logic Associates

Chalerm (Beeson) Liang, GE 2031
Supervising Geotechnical Engineer

Attachments: Figure 1, Site Plan
Logs of DH-1, DH-6 and DH-8

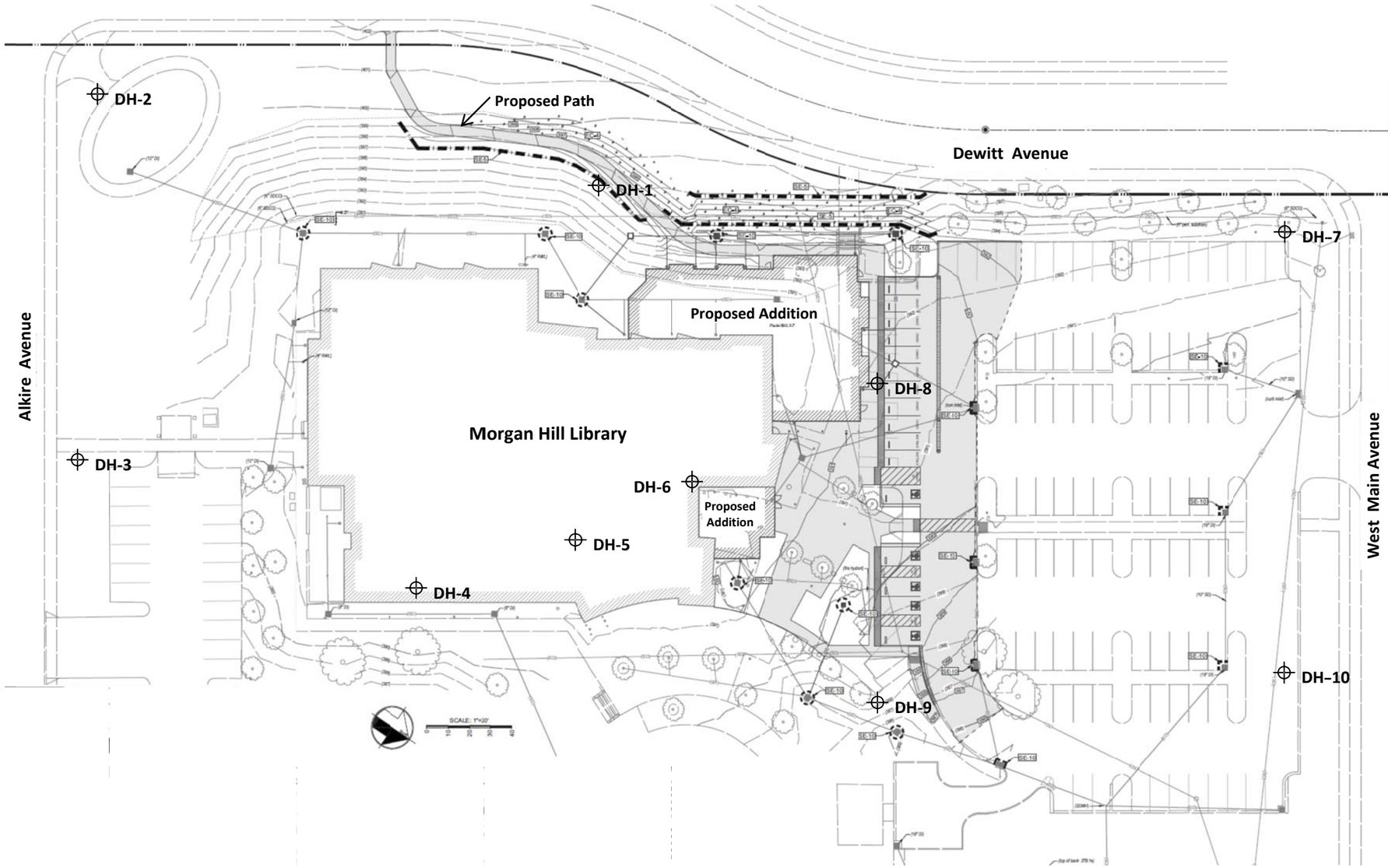

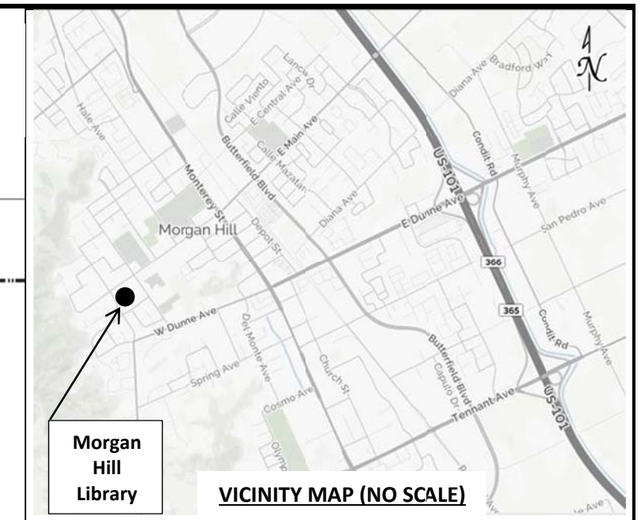

Legend

DH-10 Number & approximate location of exploratory drill hole (2001 investigation)

Base

Erosion & Sediment Control Plan, Morgan Hill Library Expansion, Sheet C1.5, prepared by MH Engineering, dated 2/1/2018.

Geo-Logic ASSOCIATES	16055 Caputo Drive, Suite D Morgan Hill, California 95037 Phone (408) 778-2818 Fax (408) 779-6879	Drafted By: Date: March 2018 Checked By: Revision:	SITE PLAN PROPOSED MORGAN HILL LIBRARY EXPANSION 660 WEST MAIN AVENUE MORGAN HILL, CALIFORNIA	FIGURE 1 PROJECT PA18.1016

KEY TO SOIL CLASSIFICATION - FINE GRAINED SOILS
(50% OR MORE IS SMALLER THAN NO. 200 SIEVE SIZE)
(modified from ASTM D2487 to include fine grained soils with intermediate plasticity)

MAJOR DIVISIONS			GROUP SYMBOLS	GROUP NAMES
SILTS AND CLAYS (Liquid Limit less than 35) Low Plasticity	Inorganic	PI < 4 or plots below "A" line	ML	Silt, Silt with Sand or Gravel, Sandy or Gravelly Silt, Sandy or Gravelly Silt with Sand or Gravel
	Inorganic	PI > 7 or plots on or above "A" line	CL	Lean Clay, Lean Clay with Sand or Gravel, Sandy or Gravelly Lean Clay, Sandy or Gravelly Lean Clay with Sand or Gravel
	Inorganic	PI between 4 and 7	CL-ML	Silty Clay, Silty Clay with Sand or Gravel, Sandy or Gravelly Silty Clay, Sandy or Gravelly Silty Clay with Sand or Gravel
	Organic	See footnote 3	OL	Organic Silt (below "A" Line) or Organic Clay (on or above "A" Line) (1,2)
SILTS AND CLAYS (35 ≤ Liquid Limit < 50) Intermediate Plasticity	Inorganic	PI < 4 or plots below "A" line	MI	Silt, Silt with Sand or Gravel, Sandy or Gravelly Silt, Sandy or Gravelly Silt with Sand or Gravel
	Inorganic	PI > 7 or plots on or above "A" line	CI	Clay, Clay with Sand or Gravel, Sandy or Gravelly Clay, Sandy or Gravelly Clay with Sand or Gravel
	Organic	See footnote 3	OI	Organic Silt (below "A" Line) or Organic Clay (on or above "A" Line) (1,2)
SILTS AND CLAYS (Liquid Limit 50 or greater) High Plasticity	Inorganic	PI plots below "A" line	MH	Elastic Silt, Elastic Silt with Sand or Gravel, Sandy or Gravelly Elastic Silt, Sandy or Gravelly Elastic Silt with Sand or Gravel
	Inorganic	PI plots on or above "A" line	CH	Fat Clay, Fat Clay with Sand or Gravel, Sandy or Gravelly Fat Clay, Sandy or Gravelly Fat Clay with Sand or Gravel
	Organic	See note 3 below	OH	Organic Silt (below "A" Line) or Organic Clay (on or above "A" Line) (1,2)

1. If soil contains 15% to 29% plus No. 200 material, include "with sand" or "with gravel" to group name, whichever is predominant.
2. If soil contains ≥30% plus No. 200 material, include "sandy" or "gravelly" to group name, whichever is predominant. If soil contains ≥15% of sand or gravel sized material, add "with sand" or "with gravel" to group name.
3. Ratio of liquid limit of oven dried sample to liquid limit of not dried sample is less than 0.75.

CONSISTENCY	UNCONFINED SHEAR STRENGTH (KSF)	STANDARD PENETRATION (BLOWS/FOOT)
VERY SOFT	< 0.25	< 2
SOFT	0.25 – 0.5	2 – 4
FIRM	0.5 – 1.0	5 – 8
STIFF	1.0 – 2.0	9 – 15
VERY STIFF	2.0 – 4.0	16 – 30
HARD	> 4.0	> 30

MOISTURE	CRITERIA
Dry	Absence of moisture, dusty, dry to the touch
Moist	Damp, but no visible water
Wet	Visible free water, usually soil is below the water table

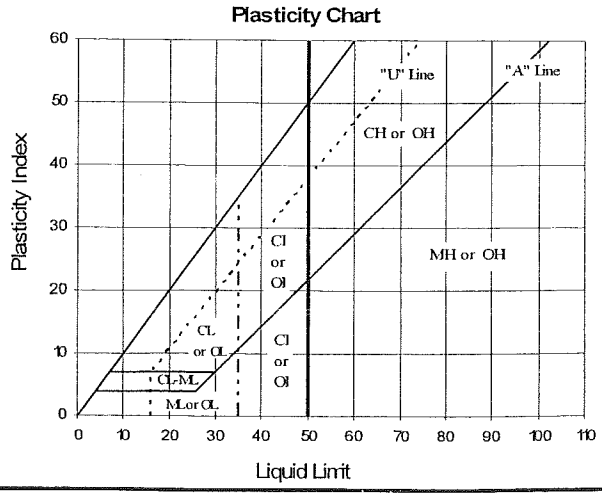

PACIFIC GEOTECHNICAL ENGINEERING

KEY TO SOIL CLASSIFICATION – COARSE GRAINED SOILS
(MORE THAN 50% IS LARGER THAN NO. 200 SIEVE SIZE)
(modified from ASTM D2487 to include fines with intermediate plasticity)

MAJOR DIVISIONS			GROUP SYMBOLS	GROUP NAMES[1]
GRAVELS (more than 50% of coarse fraction is larger than No. 4 sieve size)	Gravels with less than 5% fines	Cu ≥ 4 and 1 ≤ Cc ≤ 3	GW	Well Graded Gravel, Well Graded Gravel with Sand
		Cu < 4 and/or 1 > Cc > 3	GP	Poorly Graded Gravel, Poorly Graded Gravel with Sand
	Gravels with 5% to 12% fines	ML, MI or MH fines	GW-GM	Well Graded Gravel with Silt, Well Graded Gravel with Silt and Sand
			GP-GM	Poorly Graded Gravel with Silt, Poorly Graded Gravel with Silt and Sand
		CL, CI or CH fines	GW-GC	Well Graded Gravel with Clay, Well Graded Gravel with Clay and Sand
			GP-GC	Poorly Graded Gravel with Clay, Poorly Graded Gravel with Clay and Sand
	Gravels with more than 12% fines	ML, MI or MH fines	GM	Silty Gravel, Silty Gravel with Sand
		CL, CI or CH fines	GC	Clayey Gravel, Clayey Gravel with Sand
		CL-ML fines	GC-GM	Silty Clayey Gravel; Silty, Clayey Gravel with Sand
SANDS (50% or more of coarse fraction is smaller than No. 4 sieve size)	Sands with less than 5% fines	Cu ≥ 6 and 1 ≤ Cc ≤ 3	SW	Well Graded Sand, Well Graded Sand with Gravel
		Cu < 6 and/or 1 > Cc > 3	SP	Poorly Graded Sand, Poorly Graded Sand with Gravel
	Sands with 5% to 12% fines	ML, MI or MH fines	SW-SM	Well Graded Sand with Silt, Well Graded Sand with Silt and Gravel
			SP-SM	Poorly Graded Sand with Silt, Poorly Graded Sand with Silt and Gravel
		CL, CI or CH fines	SW-SC	Well Graded Sand with Clay, Well Graded Sand with Clay and Gravel
			SP-SC	Poorly Graded Sand with Clay, Poorly Graded Sand with Clay and Gravel
	Sands with more than 12% fines	ML, MI or MH fines	SM	Silty Sand, Silty Sand with Gravel
		CL, CI or CH fines	SC	Clayey Sand, Clayey Sand with Gravel
		CL-ML fines	SC-SM	Silty, Clayey Sand; Silty, Clayey Sand with Gravel

US STANDARD SIEVES	3 Inch	¾ Inch	No. 4	No. 10	No. 40	No. 200
	COARSE	FINE	COARSE	MEDIUM	FINE	
COBBLES & BOULDERS	GRAVELS		SANDS			SILTS AND CLAYS

RELATIVE DENSITY (SANDS AND GRAVELS)	STANDARD PENETRATION (BLOWS/FOOT)
Very Loose	0 - 4
Loose	5 – 10
Medium Dense	11 – 30
Dense	31 - 50
Very Dense	50+

1. Add "with sand" to group name if material contains 15% or greater of sand-sized particle. Add "with gravel" to group name if material contains 15% or greater of gravel-sized particle.

MOISTURE	CRITERIA
Dry	Absence of moisture, dusty, dry to the touch
Moist	Damp, but no visible water
Wet	Visible free water, usually soi is below the water table

PACIFIC GEOTECHNICAL ENGINEERING

DATE: 10-2-01	LOG OF EXPLORATORY DRILL HOLE	DH - 1

PROJECT NAME: Morgan Hill Library **PROJECT NUMBER:** 1751E

DRILL RIG: Mobile B-53, 140# Downhole Hammer w/ Wire Winch **LOGGED BY:** LLG

HOLE DIAMETER: 8" Hollow Stem Auger **HOLE ELEVATION:** 396'

SAMPLER: D = Dames & Moore (3" O.D.); X = Modified California (2.5" O.D.); I = Standard Penetrometer (2" O.D.); "S" indicates slough in sampler

GROUND WATER DEPTH: Initial 34' @ 10:15 A.M.; Final 26' @ 10:30 A.M.

DESCRIPTION OF EARTH MATERIALS	SOIL TYPE	DEPTH (ft)	SAMPLE	BLOWS PER FOOT	POCKET PEN (tsf)	% PASSING #200 SIEVE		LIQUID LIMIT	WATER CONTENT	PLASTIC LIMIT	DRY DENSITY (pcf)	FAILURE STRAIN (%)	UNCONFINED COMPRESSIVE STRENGTH (psf)
ALLUVIUM: SANDY CLAY: Dark yellowish brown, dry, very stiff; asphalt fragments.	CI	1	S	18	3.0				21		97		
CLAY with SAND: Dark brown, moist, very stiff.	CI	2	D D						18		107		
		3	S	19					25		90		
FAT CLAY: Very dark brown, moist, very stiff.	CH	4	D D		2.2				24		98	6.6	2441
		5											
LEAN CLAY with SAND: Dark yellowish brown, moist, very stiff; trace angular fine gravel.	CL	6	S	26	2.8				23		96		
		7	D D		3.0				23 22		103 106	4.8	3397
CLAYEY SAND with GRAVEL: Dark brown, moist, medium dense; fine to coarse grained sand, 15-25% fines, 20-30% fine gravel.	SC	8											
		9	S D	47									
		10	D			16			12		119		
		11											
LEAN CLAY with SAND: Reddish brown with yellowish brown mottling and some black mineralization, moist, hard; up to 20% fine to coarse grained sand.	CL	12											
		13											
		14	S D	40	3.8				25		98		
		15	D		3.5								
		16											
		17											
SANDY LEAN CLAY: Reddish brown with yellowish brown mottling, moist, hard; up to 40% fine to coarse grained sand, up to 5% 3/4" subangular gravel .	CL	18											
		19	S D	61	4.0								
		20	D										

DATE: 10-2-01	LOG OF EXPLORATORY DRILL HOLE	DH - 1

PROJECT NAME: Morgan Hill Library **PROJECT NUMBER:** 1751E

DRILL RIG: Mobile B-53, 140# Downhole Hammer w/ Wire Winch **LOGGED BY:** LLG

HOLE DIAMETER: 8" Hollow Stem Auger **HOLE ELEVATION:** 396'

SAMPLER: D = Dames & Moore (3" O.D.); X = Modified California (2.5" O.D.); I = Standard Penetrometer (2" O.D.); "S" indicates slough in sampler

GROUND WATER DEPTH: Initial 34' @ 10:15 A.M.; Final 26' @ 10:30 A.M.

DESCRIPTION OF EARTH MATERIALS	SOIL TYPE	DEPTH (ft)	SAMPLE	BLOWS PER FOOT	POCKET PEN (tsf)	% PASSING #200 SIEVE		LIQUID LIMIT	WATER CONTENT	PLASTIC LIMIT	DRY DENSITY (pcf)	FAILURE STRAIN (%)	UNCONFINED COMPRESSIVE STRENGTH (psf)
SANDY LEAN CLAY: continued	CL	21											
		22											
CLAY with SAND: Reddish brown, moist, hard; up to 10% fine subangular gravel, up to 20% fine to coarse grained sand.	CI	23											
		24	S D D	42	>4.5								
		25											
		26											
		27											
		28											
		29	S D D	36	3.8								
CLAY with SAND: Brown, moist, hard; 15-25% fine to coarse grained sand, minor angular gravel.	CI	30											
		31											
		32											
		33											
		34	S D D	61	>4.5								
		35											
BOTTOM OF HOLE @ 35 FEET Groundwater Encountered @ 34'		36											
		37											
		38											
		39											
		40											

DATE: 10-2-01	LOG OF EXPLORATORY DRILL HOLE	DH - 6

PROJECT NAME: Morgan Hill Library **PROJECT NUMBER:** 1751E

DRILL RIG: Mobile B-53, 140# Downhole Hammer w/ Wire Winch **LOGGED BY:** STC

HOLE DIAMETER: 8" Hollow Stem Auger **HOLE ELEVATION:** 389'

SAMPLER:
D = Dames & Moore (3" O.D.)
X = Modified California (2.5" O.D.)
I = Standard Penetrometer (2" O.D.)
"S" indicates slough in sampler

GROUND WATER DEPTH: Initial — Final —

DESCRIPTION OF EARTH MATERIALS	SOIL TYPE	DEPTH (ft)	SAMPLE	BLOWS PER FOOT	POCKET PEN (tsf)	% PASSING #200 SIEVE		LIQUID LIMIT	WATER CONTENT	PLASTIC LIMIT	DRY DENSITY (pcf)	FAILURE STRAIN (%)	UNCONFINED COMPRESSIVE STRENGTH (psf)
FILL: SILTY SAND: Brown, dry, loose ; up to 20% fines.	SC	1	SDD	22					13		112		
ALLUVIUM: SANDY LEAN CLAY: Dark brown, moist, very stiff; up to 35% fine to coarse grained sand.	CH	2, 3, 4	SDD	16					19		102		
color grades to black		5, 6, 7	SDD	17					28		88		
color grades to dark yellowish brown mottled black		8, 9, 10	SDD	28					21		102		
BOTTOM OF HOLE @ 10 FEET No Groundwater Encountered		11, 12, 13, 14, 15, 16, 17, 18, 19, 20											

DATE: 10-3-01	LOG OF EXPLORATORY DRILL HOLE	DH - 8

PROJECT NAME: Morgan Hill Library **PROJECT NUMBER:** 1751E

DRILL RIG: Mobile B-53, 140# Downhole Hammer w/ Wire Winch **LOGGED BY:** LLG

HOLE DIAMETER: 8" Hollow Stem Auger **HOLE ELEVATION:** 393'

SAMPLER:
D = **Dames & Moore (3" O.D.)**
X = **Modified California (2.5" O.D.)**
I = **Standard Penetrometer (2" O.D.)**
"S" indicates slough in sampler

GROUND WATER DEPTH: **Initial** — **Final** —

DESCRIPTION OF EARTH MATERIALS	SOIL TYPE	DEPTH (ft)	SAMPLE	BLOWS PER FOOT	POCKET PEN (tsf)	% PASSING #200 SIEVE		LIQUID LIMIT	WATER CONTENT	PLASTIC LIMIT	DRY DENSITY (pcf)	FAILURE STRAIN (%)	UNCONFINED COMPRESSIVE STRENGTH (psf)
ALLUVIUM: CLAY with SAND: Strong brown, damp, very stiff; up to 30% fine to coarse grained sand, trace subangular fine gravel.	CI	1	S	39					16		80		
		2	D										
			D										
FAT CLAY: Very dark brown, moist, hard; trace coarse grained sand.	CH	3	S	30					19		92		
		4	D										
			D										
		5											
		6	S	47					24		94		
color grades to a very dark grayish brown			D		3.8								
		7	D										
		8											
CLAY with SAND: Dark brown, moist, hard; up to 30% fine to coarse grained sand.	CI	9	S	30	2.8								
			D										
		10	D		3.3				21		103		
		11											
		12											
SANDY CLAY: Strong brown with black mineralization, moist, hard; 30-40% fine to coarse grained sand.	CI	13											
		14	S	37									
			D										
		15	D		>4.5								
		16											
		17											
		18											
		19	S	41									
			D										
BOTTOM OF HOLE @ 20 FEET No Groundwater Encountered		20	D										

MORGAN HILL LIBRARY ADDITION

CITY OF MORGAN HILL

CITY OF MORGAN HILL

660 W MAIN AVE, MORGAN HILL, CA 95037

JOB COPY
These plans must be kept on the job at all times
CITY OF MORGAN HILL
BUILDING DIVISION
Reviewed for Code Compliance
5/21/19
DATE

SCOPE OF WORK

GENERAL PROJECT DESCRIPTION INCLUDES:

1. CONSTRUCTION OF ADDITION TO EXISTING LIBRARY
2. EXPAND UTILITIES AND FIRE SPRINKLER SYSTEM INTO ADDITION

ABBREVIATIONS

ABV	above
AFF	above finished floor
ACFL	access floor
AP	access panel
ACPL	acoustical plaster
ACT	acoustical tile
ACR	acrylic plastic
ADD	addendum
ADH	adhesive
ADJ	adjacent
AGG	aggregate
A/C	air conditioning
ALT	alternate
ALUM	aluminum
ADA	american disability assoc.
ANC	anchor, anchorage
AB	anchor bolt
ANOD	anodized
ARCH	architect (ural)
AD	area drain
AC	asphalt concrete
AT	asphalt tile
APN	assessor parcel map
AUTO	automatic
@	at
&	and
BA	bath
BP	building paper
BSMT	basement
BRG	bearing
BPL	bearing plate
BM	bench mark
BLW	below
BETW	between
BIT	bituminous
BLK	block
BLKG	blocking
BD	board
BS	both sides
BW	both ways
BOT	bottom
BRK	brick
BRZ	bronze
BLDG	building
BUR	built-up roofing
CAB	cabinet
CAD	cadmium
CBC	california building code
CPT	carpet (ed)
CSMT	casement
CI	cast iron
CIPC	cast-in-place concrete
CST	cast stone
CB	catch basin
CK	caulk (ing)
CLG	ceiling
CHT	ceiling height
CJ	ceiling joist
CEM	cement
CL	chain link fence
CER	ceramic
CT	ceramic tile
CMT	ceramic mosaic (tile)
CHBD	chalkboard
CHAM	chamfer
CIR	circle
CIRC	circumference
CLR	clear (ance)
CO	clean out
CLS	closure
CHPS	collaborative for high performance schools
COL	column
COMB	combination
COMPT	compartment
COMPO	composition (composite)
COMP	compress (ed), (ion), (ible)
CONC	concrete
CMU	concrete masonry unit
CONST	construction
CONT	continue (ous)
CONTR	contract (or)
CJ	control joint
CPR	copper
CG	corner guard
CORR	corrugated
CTR	counter
CFL	counterflashing
CRS	course (s)
CRG	cross grain
CFT	cubic foot
CYD	cubic yard
℄	center line
CP	cement plaster
DPR	damper
DP	damp proofing
DEMO	demolish, demolition
DMT	demountable
DEP	depressed
DTL	detail
DIAG	diagonal
DIA	diameter
DIM	dimension
DPR	dispenser
DIV	division
DSA	division of the state architect
DR	door
DA	double acting
DH	double hung
DF	douglas fir
DBL PLT	double plate
D	drain
DRB	drainboard
DWR	drawer
DWG	drawing
EF	each face
ER	eave rafter
ELEC	electric (al)
EP	electrical panelboard
EWC	electric water cooler
EL	elevation
ELEV	elevator
EMB	embedment
EMER	emergency
EMT	electrical metallic tubing
ENC	enclose (ure)
EQ	equal
EQP	equipment
EST	estimate
EXCA	excavate
EXH	exhaust
<E>	existing
EXMP	expanded metal plate
EB	expansion bolt
EXP	exposed
EXT	exterior
EXS	extra strong
EA	each
EW	each way
FB	face brick
FOC	face of concrete
FOF	face of finish
FOM	face of masonry
FOS	face of stud
FF	factory finish
FN	fence
FBD	fiberboard
FRP	fiber reinforced plastic
FIN	finish (ed)
FFE	finished floor elevation
FFL	finished floor line
FA	fire alarm
FE	fire extinguisher
FEC	fire extinguisher cabinet
FPL	fireplace
FP	fireproof
FRC	fire-resistant coating
FLG	flashing
FLX	flexible
FLR	floor (ing)
FLCO	floor cleanout
FD	floor drain
FLUOR	fluorescent
FJT	flush joint
FTG	footing
FND	foundation
FR	frame (d), (ing)
FRA	fresh air
FS	full size
FBO	furnished by others
FUR	furred (ing)
FUT	future
GA	gage
GALV	galvanized
GI	galvanized iron
GP	galvanized pipe
GKT	gasket (ed)
GC	general contract (or)
GL	glass, glazing
GLB	glass block
GB	grab bar
GD	grade (ing)
GRN	granite
GVL	gravel
GT	grout
GPDW	gypsum drywall
GPL	gypsum lath
GPPL	gypsum plaster
GFCI	ground fault circuit interrupt
GYP	gypsum
H	high
HH	handhole
HBD	hardboard
HDW	hardware
HWD	hardwood
HJT	head joint
HDR	header
HTG	heating
HVAC	heating/ventilation/ air conditioning
HD	heavy duty
HT	height
HX	hexagonal
HES	high early-strength cement
HC	hollow core
HM	hollow metal
HK	hook (s)
HOR	horizontal
HB	hose bibb
INCL	include (d), (ing)
ID	inside diameter
INT	interior
INV	invert
IPS	iron pipe size
INCAN	incandescent
ISA	international sign association
JC	janitor's closet
JT	joint
JF	joint filler
J	joist
KPL	kickplate
KIT	kitchen
KD	knock down
LBL	label
LAB	laboratory
LB	lag bolt
LS	lag screw
LAM	laminate (d)
LAV	lavatory
LH	left hand
L	length
LT	light
LW	lightweight
LMS	limestone
LTL	lintel
LBS	pounds
LVR	louver
MB	machine bolt
MI	malleable iron
MH	manhole
MFR	manufacture (er)
MRB	marble
MAS	masonry
MO	masonry opening
MATL	material (s)
MAX	maximum
MECH	mechanical
MC	medicine cabinet
MTL	metal
MFD	metal floor decking
MRD	metal roof decking
MIN	minimum
MIR	mirror
MISC	miscellaneous
MOD	modular
MLD	molding, molding
MT	mount (ed), (ing)
MOV	movable
MULL	mullion
NL	nailable
NAT	natural
(N)	new
NRC	noise reduction coefficient
NOM	nominal
NIC	not in contract
NTS	not to scale
OBS	obscure
OC	on center (s)
OPG	opening
OPH	opposite hand
OD	outside diameter
OA	overall
OH	overhead
O/	over
PNT	paint (ed)
PNL	panel
PB	panic bar
PTD	paper towel dispenser
PTR	paper towel receptor
PAR	parallel
PK	parking
PBD	particle board
PTN	partition
POT	path of travel
PV	pave (d), (ing)
PVMT	pavement
PED	pedestal
PERF	perforate (d)
PERIM	perimeter
PA	planting area
PLAS	plaster
PLAM	plastic laminate
PLT	plate
PG	plate glass
PLWD	plywood
PVC	polyvinylchloride
PSF	pounds per square foot
PCC	precast concrete
PFN	prefinished
PRF	preformed
PFMG	pre-formed metal gutter
PTN	project tracking number
⅊	property line, plate
QT	quarry tile
RAD	radius
RWL	rainwater leader
REF	reference
RFL	reflect (d), (ing)
REFR	refrigerator
REG	register
RCP	reinforced conc pipe
REM	remove
RES	resilient
RA	return air
RVS	reverse (side)
REV	revision (s), revised
RH	right hand
ROW	right-of-way
R	riser
RD	roof drain
RFH	roof hatch
RR	roof rafter
RM	room
RO	rough opening
RB	rubber base
RBT	rubber tile
SFGL	safety glass
SCCOE	santa clara county office of education
SCH	schedule
SCD	see civil drawings
SSD	see structural drawings
SMD	see mechanical drawings
SED	see electrical drawings
SEC	sections
SHTH	sheathing
SHT	sheet
SH	shelf, shelving
SIM	similar
SB	solid block
SC	solid core
SP	soundproof
SPC	spacer
SPK	speaker
SPEC	specification (s)
SQ	square
SST	stainless steel
STD	standard
STA	station
STO	storage
SD	storm drain
STR	structural
SCT	structural clay tile
SUS	suspended
SYM	symmetry (ical)
STC	sound transmission class
TKBD	tackboard
TKS	tackstrip
TEL	telephone
TV	television
TC	terra cotta
TZ	terrazzo
THK	thick (ness)
THR	threshold
TPTN	toilet partition
TPD	toilet paper dispenser
T&G	tongue and groove
TO	top of
TB	towel bar
TR	transom
T	tread
TYP	typical
UMC	uniform mechanical code
UBC	uniform building code
UPC	uniform plumbing code
UFC	uniform fire code
UR	urinal
UNO	unless noted otherwise
VCT	vinyl composition tile
VB	vapor barrier
VERT	vertical
VTR	vent through roof
WC	water closet
WCO	wall cleanout
WD	wood
WGL	wire glass
WH	water heater
WI	wrought iron
WIND	window
WP	waterproof
WR	water resistant
WSCT	wainscot (ing)
W/	with
W/O	without

SHEET LEGEND

GENERAL
- A0.1 TITLE SHEET
- A0.2 CAL GREEN CHECKLIST

CIVIL
- C1.0 SITE TOPOGRAPHY MAP & DEMO PLAN
- C1.1 GRADING & DRAINAGE PLAN
- C1.2 EROSION & SEDIMENT CONTROL PLAN

ARCHITECTURAL
- A1.0 OVERALL SITE PLAN
- A1.1 EXISTING & DEMO SITE PLAN
- A1.2 ENLARGED SITE PLAN
- A1.3 SITE DETAILS
- A1.4 SITE DETAILS
- A2.0 EXISTING/DEMO WALL PLAN
- A2.1 FLOOR PLAN
- A2.01 EXISTING RESTROOMS - FOR REFERENCE ONLY
- A2.2 EGRESS PLAN
- A2.3 FINISH PLAN
- A2.4 EXISTING & DEMO REFLECTED CEILING PLAN
- A2.5 REFLECTED CEILING PLAN
- A2.6 EXISTING & DEMO ROOF PLAN
- A2.7 ROOF PLAN
- A3.1 EXTERIOR ELEVATIONS
- A3.2 EXTERIOR ELEVATIONS
- A4.1 BUILDING SECTIONS
- A5.1 INTERIOR ELEVATIONS
- A5.2 INTERIOR ELEVATIONS
- A6.1 DOOR & WINDOW SCHEDULE
- A6.2 DOOR & WINDOW DETAILS
- A7.1 WALL TYPES & CURB PLAN
- A8.1 ROOF DETAILS
- A8.2 ROOF DETAILS
- A9.1 T-BAR CEILING DETAILS
- A9.2 CEILING DETAILS
- A9.3 CABINET DETAILS
- A9.4 SIGNAGE & MISC DETAILS

STRUCUTRAL
- S1.1 STRUCTURAL SPECIFICATIONS
- S1.2 STRUCTURAL WOOD SCHEDULES AND NOTES
- S1.3 STRUCTURAL CONCRETE SCHEDULES AND NOTES
- S2.0 FOUNDATION PLAN
- S2.1 ROOF FRAMING PLAN
- S5.10 FOUNDATION SECTIONS AND DETAILS
- S5.11 FOUNDATION SECTIONS AND DETAILS
- S6.30 ROOF FRAMING SECTIONS AND DETAILS
- S6.31 ROOF FRAMING SECTIONS AND DETAILS
- S6.40 WALL FRAMING SECTIONS AND DETAILS
- S6.41 WALL FRAMING SECTIONS AND DETAILS
- S6.90 COLLECTOR DETAILS

PLUMBING
- P0.1 PLUMBING: GENERAL NOTES, LEGEND & SCHEDULES
- P0.2 PLUMBING: SHEET SPECIFICATIONS AND DETAILS
- P2.1 PLUMBING: ROOF PLAN

MECHANICAL
- M0.1 HVAC: LEGEND & NOTES
- M1.1 HVAC: SCHEDULES & DETAILS
- M1.2 HVAC: CONTROLS
- M2.1 HVAC: FLOOR AND ROOF PLANS
- T24.1 TITLE 24
- T24.2 TITLE 24

ELECTRICAL
- E0.1 SYMBOLS, ABBRE., LIGHT FIXTURE SCHEDULE, CODES, STANDARDS, NOTES & SHEET INDEX
- E0.2 CALIFORNIA ENERGY COMPLAINCE TITLE 24 (BUILDING INTERIOR)
- E0.3 CALIFORNIA ENERGY COMPLAINCE TITLE 24 (BUILDING EXTERIOR)
- E0.4 CALIFORNIA ENERGY COMPLAINCE TITLE 24 (SOLAR READY AREAS)
- E0.5 CALIFORNIA ENERGY COMPLAINCE TITLE 24 (BUILDING EXTERIOR)
- E1.1 ELECTRICAL SINGLE LINE DIAGRAM & PANELBOARD SCHEDULES
- E2.0 ELECTRICAL SITE PLAN
- E3.1 ELECTRICAL DEMOLITION PLAN
- E4.1 POWER & SYSTEMS PLAN - PARTIAL BUILDING
- E4.2 POWER & SYSTEMS PLAN - NORTH EAST
- E4.3 POWER & SYSTEMS PLAN - ROOF
- E5.1 LIGHTING PLAN - NORTH EAST
- E6.1 ELECTRICAL DETAILS
- E6.2 ELECTRICAL DETAILS

LANDSCAPE
- L1.0 LANDSCAPE PLAN
- L2.0 <E>/DEMO IRRIGATION PLAN
- L2.1 IRRIGATION PLAN
- L3.1 LANDSCAPE DETAILS

Department Sign-Offs Required For Final Inspection:

- [x] Planning
- [ ] Public Works - Fees
- [ ] Flood Elevation Certificate
- [ ] Public Works - Inspection
- [ ] Public Works - Backflow
- [x] Fire Prevention
- [ ] Housing
- [ ] Pretreatment
- [x] School District
- [ ] Health Department
- [ ] Hazardous Material
- [ ] Landscape Certificate
- [ ] Green Building Certification
- [x] Construction Waste Mgmt.
- [ ] Wage Theft Prevention
- [ ] Geologic
- [ ] Other

GREEN BUILDING REQUIREMENTS:

1. SEE SHEET A0.2 FOR CALGREEN CHECKLIST
2. PER CGBS CODE SECTION 301.3.1 & CIVIL CODE SECTION 1101.5(d)(1)(B), ALL EXISTING NON-COMPLIANT PLUMBING FIXTURES ARE REQUIRED TO BE UPGRADED WITH WATER CONSERVING PLUMBING FIXTURES. WATER CLOSETS WITH A FLOW RATE IN EXCESS OF 1.6 GPF WILL NEED TO BE REPLACED WITH WATER CLOSETS WITH A MAXIMUM FLOW RATE OF 1.28 GPF. KITCHEN FAUCETS WITH A FLOW RATE GREATER THAN 2.2 GPM WILL NEED TO BE REPLACED WITH A FAUCET WITH MAXIMUM FLOW RATE OF 1.8 GPM @ 60 PSI. LAVATORY FAUCETS WITH A FLOW RATE GREATER THAN 2.2 GPM WILL NEED TO BE REPLACED WITH A FAUCET WITH MAXIMUM FLOW RATE OF 0.5 PGM @ 60 PSI. URINAL WITH A FLOW RATE EXCEEDING 1 GPF SHALL BE REPLACED WITH MAXIMUM 0.5 GPF (WALL MOUNTED URINAL 0.125 GPF).

Type "M" Copper Prohibited 1

DEFERRED APPROVAL

1. FIRE SPRINKLER SYSTEM
2. ALTERATIONS TO FIRE ALARM SYSTEM

TESTING AND INSPECTIONS

1. SPECIAL INSPECTIONS SPECIFIC TO THIS PROJECT ARE REQUIRED. **SEE SHEET S1.1 FOR THE LIST OF REQUIRED SPECIAL INSPECTIONS.**

CONTACTS

OWNER	CITY OF MORGAN HILL 660 W MAIN AVE MORGAN HILL, CA 95037 PHONE: 1-408-779-7271 FAX: 1-408-779-3117
CIVIL	M & H ENGINEERING CO. 16075 VINEYARD BLVD. MORGAN HILL, CA 95037 ATTN: HARRY SINGLA PHONE: 408-779-7381
ARCHITECT	WESTON MILES ARCHITECTS, INC. 17500 DEPOT STREET, SUITE #120 MORGAN HILL, CA 95037 ATTN: CHARLES WESTON PHONE: 1-408-779-6686 FAX: 1-408-778-9417
STRUCTURAL	PEOPLES ASSOCIATES STRUCTURAL ENGINEERS, INC. 1996 TAROB CT. MILPITAS, CA 95035 ATTN: DAVE LO PHONE: 1-408-957-9220
MECHANICAL/ PLUMBING	H&M MECHANICAL GROUP 8517 EARNHARD ROAD, SUITE #230 OAKLAND, CA 94621 ATTN: GARY HENNINGS PHONE: 1-510-569-2000 FAX: 1-510-569-2002
ELECTRICAL	AURUM CONSULTING ENGINEERS 60 GARDEN COURT, SUITE 210 MONTEREY, CA 93940 ATTN: NAJIB ANWARY PHONE: 1-831-646-3330 FAX: 1-831-646-3336
GEOTECHNICAL	PACIFIC GEOTECHNICAL 16055 CAPUTO DR., STE D MORGAN HILL, CA 95037 ATTN: BEESON LIANG PHONE: 1-408-778-2818 X401 EMAIL: BLIANG@GEO-LOGIC.COM

SYMBOLS

- DESCRIBES AN "AREA" OR "FIELD"
- RM NAME — ROOM NAME; 101 — ROOM NUMBER
- ELEVATION: 1 / A3.1 — Elevation Reference Number; Sheet Number when shown
- SECTION: 1 / A4.1 — Section Reference Number; Sheet Number when shown
- ROOM ELEVATION: 1; 1 / A5.1 — Detail Reference Number; 2 — Elevation Reference Number; 2 — Sheet Number where shown
- TYPICAL DETAIL: 1 / A7.1 — Detail Reference Number; Sheet Number where shown
- PHOTO REFERENCE: 1 / A1.1 — Direction Indicator; Detail Reference Number; Sheet Number where shown
- TYPICAL COLUMN or SHEAR LINE: A — Column or Shear Line Designation; Center Line of Column or Shear Wall
- TRUE NORTH / NORTH REF. — NORTH ARROW

CODE COMPLIANCE

ALL WORK & MATERIAL SHALL BE PERFORMED & INSTALLED IN COMPLIANCE WITH THE FOLLOWING CODES AS ADOPTED AND AMENDED BY THE GOVERNING JURISDICTION. NOTHING IN THESE PLANS IS TO BE CONSTRUED TO PERMIT WORK NOT CONFORMING TO THESE CALIFORNIA CODES. EFFECTIVE JANUARY 1, 2016

2016 CALIFORNIA ADMINISTRATIVE CODE, PART 1, TITLE 24 CCR

2016 CALIFORNIA BLDG CODE (CBC). PART 2, TITLE 24, CCR (2015 INTERNATIONAL BLDG CODE VOL. 1-2 AND 2016 AMENDMENTS)

2016 CALIFORNIA ELECTRICAL CODE (CEC). PART 3,TITLE 24 CCR (2015 NATIONAL ELECTRICAL CODE AND 2016 CA AMENDMENTS)

2016 CALIFORNIA MECHANICAL CODE (CMC). PART 4, TITLE 24 CCR (2015 UNIFORM MECHANICAL CODE AND 2016 CA AMENDMENTS)

2016 CALIFORNIA PLUMBING CODE (CPC). PART 5, TITLE 24 CCR (2015 UNIFORM PLUMBING CODE AND 2016 CA AMENDMENTS)

2016 CALIFORNIA ENERGY CODE (CEnC). PART 6, TITLE 24 CCR

2016 CALIFORNIA FIRE CODE (CFC). PART 9, TITLE 24 CCR (2015 INTERNATIONAL FIRE CODE AND 2016 CA AMENDMENTS)

2016 CALIFORNIA GREEN BUILDING STANDARDS CODE. PART 11, TITLE 24 CCR

2016 CALIFORNIA REFERENCED STANDARDS. PART 12, TITLE 24 CCR.

TITLE 19 CCR, PUBLIC SAFETY, STATE FIRE MARSHALL REGULATIONS

2010 AMERICANS W/DISABILITIES ACT (ADA) STANDARDS FOR ACCESSIBLE DESIGN

2016 NFPA 13, INSTALLATION OF AUTOMATIC SPRINKLER SYST. (CA AMENDED)

2013 NFPA 14, INSTALLATION OF STANDPIPE & HOLD SYSTEMS (CA AMENDED)

2013 NFPA 17, DRY CHEMICAL EXTINGUISHING SYSTEMS

2013 NFPA 17A, WET CHEMICAL EXTINGUISHING SYSTEMS

2016 NFPA 20, INSTALLATION OF STATIONARY PUMPS FOR FIRE PROTECTION

2013 NFPA 22, WATER TANKS FOR PRIVATE FIRE PROTECTION

2016 NFPA 24, INSTALLATION OF PRIVATE FIRE SERVICE MAINS & THEIR APPURTENANCES (CA EDITION)

2013 NFPA 25, INSPECTION, TESTING, MAINTENANCE OF WATER-BASED FIRE PROTECTION SYSTEMS (CA AMENDED)

2013 NFPA 72, NATIONAL FIRE ALARM CODE (CA AMENDED; SEE UL STD 1071 FOR "VISUAL DEVICES")

2013 NFPA 80, FIRE DOORS AND OTHER OPENING PROTECTIVES

2013 NFPA 110, EMERGENCY AND STANDBY POWER SYSTEMS

2012 NFPA 170, STANDARD FOR FIRE SAFETY & EMERGENCY SYMBOLS

2012 NFPA 2001 CLEAN AGENT FIRE EXTINGUISHING SYSTEMS

SFM 12-10-1, POWER OPERATED EXIT DOORS

SFM 12-10-2, SINGLE POINT LATCHING OR LOCKING DEVICES

SFM 12-10-3, EMERGENCY EXIT & PANIC HARDWARE

UL 38, MANUAL OPERATING SIGNAL BOXES (2008 EDITION)

UL 268, SMOKE DETECTORS FOR FIRE PROTECTIVE SIGNALING SYSTEMS (2009 EDITION)

UL 268A, SMOKE DETECTORS DUCT APPLICATIONS (2008 EDITION)

UL 300, FIRE TESTING OF FIRE EXTINGUISHING SYST. FOR PROTECT- ION OF RESTAURANT COOKING AREAS (2005 EDITION)

UL 305, PANIC HARDWARE (2012 EDITION)

UL 464, AUDIBLE SIGNAL APPLICATIONS (2009 EDITION)

UL 521, HEAT DETECTORS FOR FIRE PREVENTING SIGNALING SYSTEM (1999 EDITION)

UL 864, CONTROL UNITS FOR FIRE PROTECTIVE SIGNALING SYSTEMS (2003 EDITION WITH REVISIONS THROUGH JULY 14,2005)

CCR TITLE 8, DIVISION 1, CHAPTER 4, SUBCHAPTER 6, ELEVATOR SAFETY ORDERS, COMMENCING WITH SECTION 3094.2.

ASME A17.1 - 2007 (W/A17.1A/CSA B44A-08 ADDENDA) SAFETY CODE FOR ELEVATORS AND ESCALATORS.

ASME A18.1 - 2003, SAFETY STANDARD FOR PLATFORM LIFTS AND STAIRWAY CHAIRLIFTS, COMMENCING WITH SECTION 2.

ICC 300-2012 STANDARD FOR BLEACHERS, FOLDING AND TELSCOPIC SEATING AND GRANDSTANDS

COMPLIANCE WITH CFC CHAPTER 33 "FIRE SAFTEY DURING CONSTRUCTION AND DEMOLITION' WILL BE ENFORCED.

EMERGENCY VEHICLE ACCESS ROADS AND ON SITE FIRE HYDRANTS SHALL BE IN SERVICE AND OPERABLE PRIOR TO LOADING THE SITE WITH COMBUSTABLE MATERIALS.

WESTON MILES
ARCHITECTS
17500 Depot Street, Suite #200
Morgan Hill, CA 95037
T •408 • 779 • 6686
• Architecture • Landscape •

LICENSED ARCHITECT CHARLES D. WESTON STATE OF CALIFORNIA
NOT VALID WITHOUT SIGNATURE

REVISIONS
1 03/28/2019 PLAN REVIEW #2
2
3

BUILDING DEPT. MAY 16 2019 CITY OF MORGAN HILL
BUILDING DEPT. MAY 02 2019 CITY OF MORGAN HILL
BUILDING DEPT. APR 03 2019 CITY OF MORGAN HILL

JOB COPY
These plans must be kept on the job at all times.
CITY OF MORGAN HILL
BUILDING DIVISION

TITLE SHEET

MORGAN HILL LIBRARY ADDITION

CITY OF MORGAN HILL
660 W MAIN AVE, MORGAN HILL, CA 95037

These drawings are instruments of service and are the property of WESTON MILES ARCHITECTS, INC. All designs and other information on the drawings are for use on the specified project and shall not be used otherwise without the expressed written permission of WESTON MILES ARCHITECTS, INC.

Written dimensions on these drawings shall have precedence over scaled dimensions. Contractors shall verify and be responsible for all dimensions and conditions on the job and this office shall be notified of any variations from the dimensions and conditions shown by these drawings. Shop details shall be submitted to this office for approval before proceeding with fabrication.

© Copyright 2019

DATE: 02/8/2019

JOB NO.: 15058

A0.1

BCOW2019-0015

STATE OF CALIFORNIA – DEPARTMENT OF GENERAL SERVICES – BUILDING STANDARDS COMMISSION
CALGreen Verification Guidelines – Mandatory Measures Checklist
BSC CG-200 (Rev. 12/16)

CALGreen VERIFICATION GUIDELINES MANDATORY MEASURES CHECKLIST

Application: This checklist shall be used for nonresidential projects that meet one of the following: new construction, building additions of 1,000 sq. ft. or greater or building alterations with a permit valuation of $200,000 or more pursuant to *CALGreen* Section 301.3 AND do not trigger a Tier 1 or Tier 2 requirement:

Y = Yes (section has been selected and/or included)
N/A = Not Applicable (Code section does not apply to the project, mainly used for additions and alterations)
O = Other (provide explanation)
[N] = New construction pursuant to Section 301.3
[A] = Additions and/or alterations pursuant to Section 301.3

CHAPTER 5 DIVISIONS		SECTION TITLE	CODE SECTION	Y	N/A	O	Plan sheet, Spec or Attach Reference
DIVISION 5.1 Planning and Design	Mandatory	Storm Water Pollution Prevention w/ subsections	5.106.1 through 5.106.1.2	X			C1.2
	Mandatory	Short Term Bicycle Parking	5.106.4.1.1		X		
	Mandatory	Long Term Bicycle Parking	5.106.4.1.2		X		
	Mandatory	Designated Parking For Clean Air Vehicles	5.106.5.2		X		
	Mandatory	Parking stall marking	5.106.5.2.1		X		
	Mandatory	Single (EV) Charging space requirements [N]	5.106.5.3.1		X		
	Mandatory	Multiple (EV) Charging space requirements [N]	5.106.5.3.2		X		
	Mandatory	EV charging space calculation [N] w/exceptions	5.106.5.3.3		X		
	Mandatory	[N] Identification	5.106.5.3.4		X		
	Mandatory	[N] Future charging spaces w/ notes 1-3	5.106.5.3.5		X		
	Mandatory	Light Pollution Reduction [N] w/ exceptions and note	5.106.8		X		
	Mandatory	Grading and Paving w/exception for Additions and Alterations not altering the drainage path	5.106.10	X			C1.1
DIVISION 5.2 Energy Efficiency	Mandatory	Meet the minimum Energy Efficiency Standard	5.201.1	X			T24.1 & T24.2
DIVISION 5.3 Water Efficiency and Conservation	Mandatory	Separate Meters (new buildings or additions > 50,000 SF that consume more than 100 gal/day)	5.303.1.1		X		
	Mandatory	Separate Meters (for tenants in new buildings or additions that consume more than 1,000 gal/day)	5.303.1.2		X		
	Mandatory	Water closets shall not exceed 1.28 gallons per flush	5.303.3.1		X		
	Mandatory	Wall-mounted urinals shall not exceed 0.125 gpf	5.303.3.2.1		X		
	Mandatory	Floor-mounted urinals shall not exceed 0.5 gpf	5.303.3.2.2		X		
	Mandatory	Single showerhead shall have maximum flow rate of 2.0 gpm (gallons per minute) at 80 psi	5.303.3.3.1		X		
	Mandatory	Multiple showerheads serving one shower shall have a combined flow rate of 2.0 gpm at 80 psi	5.303.3.3.2		X		
	Mandatory	Nonresidential lavatory faucets	5.303.3.4.1	X			P0.1
	Mandatory	Kitchen faucets	5.303.3.4.2		X		
	Mandatory	Wash basins	5.303.3.4.3		X		
	Mandatory	Metering faucets	5.303.3.4.4	X			P0.1
	Mandatory	Metering faucets for wash fountains	5.303.3.4.5		X		
	Mandatory	Food waste disposers w/note	5.303.4.1		X		
	Mandatory	Areas of additions and alterations	5.303.5	X			P0.1
	Mandatory	Standards for plumbing fixtures and fittings	5.303.6	X			P0.1
	Mandatory	Outdoor water use in landscape areas equal to or greater than 500 square feet	5.304.2	X			L2.3
	Mandatory	Outdoor water use in rehabilitated landscape projects with areas equal to or greater than 2,500 square feet	5.304.3		X		
	Mandatory	Outdoor water use in landscape areas of 2,500 square feet or less	5.304.4		X		
	Mandatory	Graywater or rainwater use in landscaped areas	5.304.5		X		
DIVISION 5.4 Material Conservation and Resource Efficiency	Mandatory	Weather Protection	5.407.1		X		
	Mandatory	Moisture Control: sprinklers	5.407.2.1	X			L2.3
	Mandatory	Moisture Control: Exterior door protection	5.407.2.2.1	X			A4.1
	Mandatory	Moisture Control: Flashing	5.407.2.2.2	X			076000
	Mandatory	Construction waste management-comply with either: sections 5.408.1.1, 5.408.1.2, 5.408.1.3 or more stringent local ordinance	5.408.1.1, 5.408.1.2, 5.408.1.3	X			017400
	Mandatory	Construction waste management: Documentation w/notes	5.408.1.4	X			017400
	Mandatory	Universal Waste [A]	5.408.2	X			017400
	Mandatory	Excavated soil and land clearing debris w/ exception and notes	5.408.3	X			024113
	Mandatory	Recycling by Occupants w/ exception	5.410.1	X			-
	Mandatory	Recycling by Occupants: Additions w/ exception	5.410.1.1	X			-
	Mandatory	Recycling by Occupants: Sample ordinance	5.410.1.2	X			-
	Mandatory	Commissioning new buildings (≥ 10,000 SF) [N] w/exceptions and notes	5.410.2		X		
	Mandatory	Owner's or Owner representative's Project Requirements (OPR) [N]	5.410.2.1		X		
	Mandatory	Basis of Design (BOD) [N]	5.410.2.2		X		
	Mandatory	Commissioning Plan [N]	5.410.2.3		X		
	Mandatory	Functional Performance Testing [N]	5.410.2.4		X		
	Mandatory	Documentation and Training [N]	5.410.2.5		X		
	Mandatory	Systems Manual [N]	5.410.2.5.1		X		
	Mandatory	Systems Operation Training) [N]	5.410.2.5.2		X		
	Mandatory	Commissioning Report [N]	5.410.2.6		X		
	Mandatory	Testing and adjusting for new buildings < 10,000 SF or new systems that serve additions or alterations.	5.410.4	X			-
	Mandatory	System Testing Plan for HVAC, Lighting, water heating, renewable energy, landscape irrigation and water reuse.	5.410.4.2	X			-
	Mandatory	Procedures for testing and adjusting	5.410.4.3	X			-
	Mandatory	HVAC balancing	5.410.4.3.1	X			M0.1
	Mandatory	Reporting for testing and adjusting	5.410.4.4	X			-
	Mandatory	Operation and Maintenance (O&M) Manual	5.410.4.5	X			-
	Mandatory	Inspection and reports	5.410.4.5.1	X			-
DIVISION 5.5 Environmental Quality	Mandatory	Fireplaces	5.503.1		X		
	Mandatory	Woodstoves	5.503.1.1		X		
	Mandatory	Temporary ventilation	5.504.1	X			M0.1
	Mandatory	Covering of ducts openings and protection of mechanical equipment during construction	5.504.3	X			M0.1
	Mandatory	Adhesives, sealants and caulks	5.504.4.1	X			079000
	Mandatory	Paints and coatings	5.504.4.3	X			099100
	Mandatory	Aerosol paints and coatings	5.504.4.3.1	X			099100
	Mandatory	Aerosol paints and coatings: Verification	5.504.4.3.2	X			099100
	Mandatory	Carpet systems	5.504.4.4	X			096800
	Mandatory	Carpet cushion	5.504.4.4.1	X			096800
	Mandatory	Carpet adhesive	5.504.4.4.2	X			096800
	Mandatory	Composite wood products	5.504.4.5	X			064100
	Mandatory	Composite wood products: Documentation	5.504.4.5.3	X			064100
	Mandatory	Resilient flooring systems	5.504.4.6	X			096500
	Mandatory	Resilient flooring: Verification of compliance	5.504.4.6.1	X			096500
	Mandatory	Filters w/ exceptions	5.504.5.3	X			M0.1
	Mandatory	Filters: Labeling	5.504.5.3.1	X			M0.1
	Mandatory	Environmental tobacco smoke (ETS) control	5.504.7		X		
	Mandatory	Indoor moisture control	5.505.1	X			T24.1&4.2
	Mandatory	Outside air delivery	5.508.1	X			M0.1
	Mandatory	Carbon dioxide (CO2) monitoring	5.508.2	X			M0.1
	Mandatory	Acoustical control w/ exception	5.507.4		X		
	Mandatory	Exterior noise transmission, prescriptive method w/ exceptions	5.507.4.1		X		
	Mandatory	Noise exposure where noise contours are not readily available	5.507.4.1.1		X		
	Mandatory	Performance method	5.507.4.2		X		
	Mandatory	Site features	5.507.4.2.1		X		
	Mandatory	Documentation of compliance	5.507.4.2.2		X		
	Mandatory	Interior sound transmission w/ note	5.507.4.3		X		
	Mandatory	Ozone depletion and greenhouse gas reductions	5.508.1	X			M0.1
	Mandatory	Chlorofluorocarbons (CFCs)	5.508.1.1	X			M0.1
	Mandatory	Haions	5.508.1.2	X			M0.1
	Mandatory	Supermarket refrigerant leak reduction for retail food stores 8,000 square feet or more sections 5.508.2 through 5.508.2.6.3	5.508.2 through 5.508.2.6.3		X		
		END OF MANDATORY PROVISIONS					

Documentation Author's /Responsible Designer's Declaration Statement Mandatory: I attest that this mandatory provisions checklist is accurate and complete.

Signature:	
Company: WESTON MILES ARCHITECTS	Date: 3/29/2019
Address: 17500 DEPOT STREET, SUITE 200	License: C 18,552
City/State/Zip MORGAN HILL, CA 95037	License:

JOB COPY
These plans must be kept on the job at all times.
CITY OF MORGAN HILL
BUILDING DIVISION

WESTON MILES
ARCHITECTS
17500 Depot Street, Suite #200
Morgan Hill, CA 95037
1 •408 • 779 • 6686
• Architecture • Landscape •

NOT VALID WITHOUT SIGNATURE

REVISIONS
1 03/28/2019 PLAN REVIEW #2
2
3

CAL GREEN CHECKLIST
MORGAN HILL LIBRARY ADDITION
CITY OF MORGAN HILL
660 W MAIN AVE, MORGAN HILL, CA 95037

These drawings are instruments of service and are the property of WESTON MILES ARCHITECTS, INC. All designs and plans indicated or represented by these drawings are the specified project and shall not be used otherwise without the expressed written permission of WESTON MILES ARCHITECTS, INC.

Written dimensions on these drawings shall have precedence over scaled dimensions. Contractors shall verify and be responsible for all dimensions and conditions on the job and this office shall be notified of any variations from the dimensions and conditions shown by these drawings. Shop details shall be submitted to this office for approval before proceeding with fabrication.

© Copyrighted 2019

DATE: 02/8/2019
JOB NO: 15058

A0.2

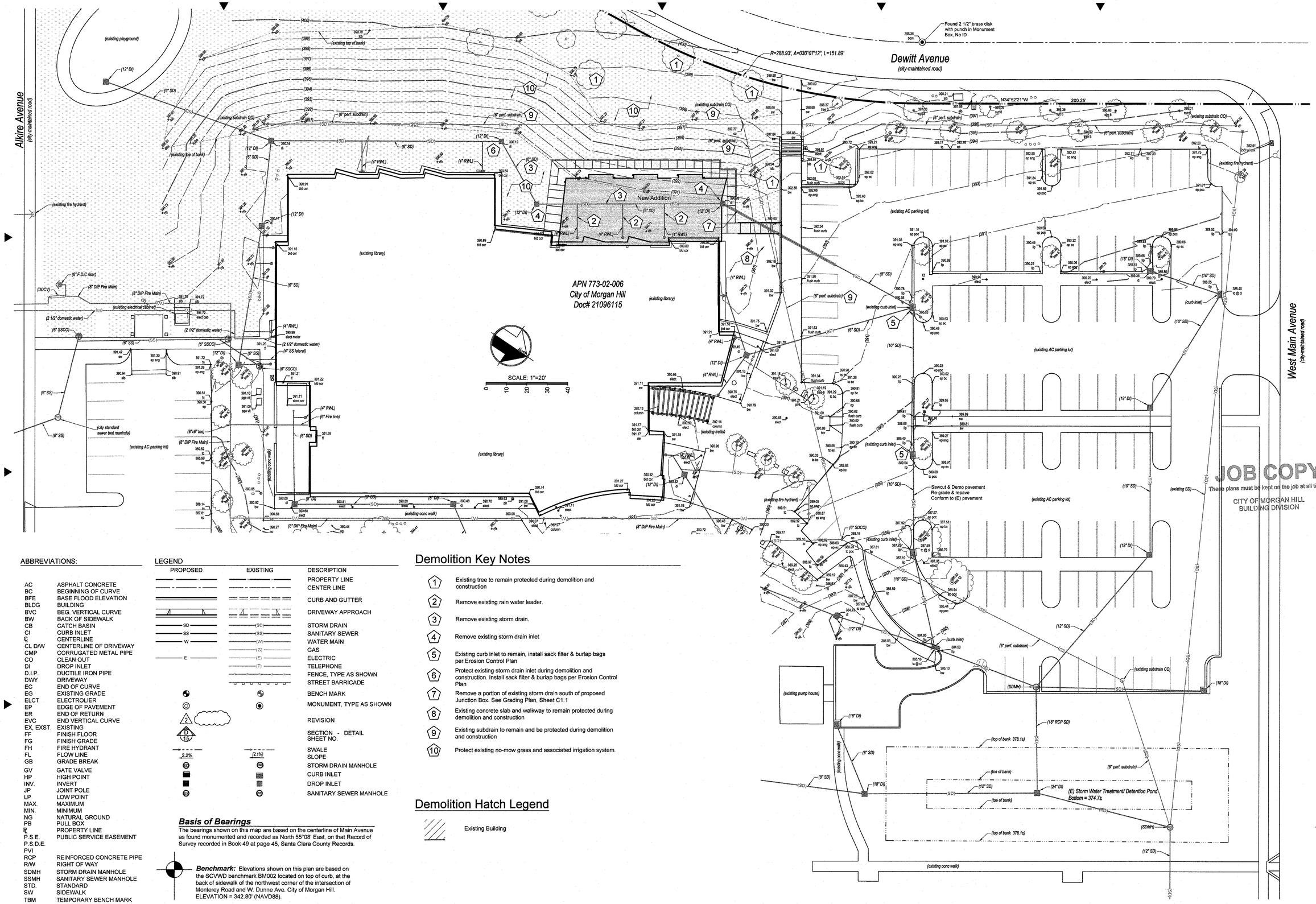

ABBREVIATIONS:

AC	ASPHALT CONCRETE
BC	BEGINNING OF CURVE
BFE	BASE FLOOD ELEVATION
BLDG	BUILDING
BVC	BEG. VERTICAL CURVE
BW	BACK OF SIDEWALK
CB	CATCH BASIN
CI	CURB INLET
℄	CENTERLINE
CL D/W	CENTERLINE OF DRIVEWAY
CMP	CORRUGATED METAL PIPE
CO	CLEAN OUT
DI	DROP INLET
D.I.P.	DUCTILE IRON PIPE
DWY	DRIVEWAY
EC	END OF CURVE
EG	EXISTING GRADE
ELCT	ELECTROLIER
EP	EDGE OF PAVEMENT
ER	END OF RETURN
EVC	END VERTICAL CURVE
EX, EXST.	EXISTING
FF	FINISH FLOOR
FG	FINISH GRADE
FH	FIRE HYDRANT
FL	FLOW LINE
GB	GRADE BREAK
GV	GATE VALVE
HP	HIGH POINT
INV.	INVERT
JP	JOINT POLE
LP	LOW POINT
MAX.	MAXIMUM
MIN.	MINIMUM
NG	NATURAL GROUND
PB	PULL BOX
ℙ	PROPERTY LINE
P.S.E.	PUBLIC SERVICE EASEMENT
P.S.D.E.	
PVI	
RCP	REINFORCED CONCRETE PIPE
R/W	RIGHT OF WAY
SDMH	STORM DRAIN MANHOLE
SSMH	SANITARY SEWER MANHOLE
STD.	STANDARD
SW	SIDEWALK
TBM	TEMPORARY BENCH MARK
TC	TOP OF CURB
TYP.	TYPICAL
WM	WATER METER
WV	WATER VALVE

LEGEND

PROPOSED	EXISTING	DESCRIPTION
		PROPERTY LINE
		CENTER LINE
		CURB AND GUTTER
		DRIVEWAY APPROACH
SD	(SD)	STORM DRAIN
SS	(SS)	SANITARY SEWER
W	(W)	WATER MAIN
	(G)	GAS
E	(E)	ELECTRIC
	(T)	TELEPHONE
		FENCE, TYPE AS SHOWN
		STREET BARRICADE
		BENCH MARK
		MONUMENT, TYPE AS SHOWN
2		REVISION
D / 15		SECTION - DETAIL SHEET NO.
2.2%	(2.1%)	SWALE / SLOPE
		STORM DRAIN MANHOLE
		CURB INLET
		DROP INLET
		SANITARY SEWER MANHOLE

Basis of Bearings

The bearings shown on this map are based on the centerline of Main Avenue as found monumented and recorded as North 55°08' East, on that Record of Survey recorded in Book 49 at page 45, Santa Clara County Records.

Benchmark: Elevations shown on this plan are based on the SCVWD benchmark BM002 located on top of curb, at the back of sidewalk of the northwest corner of the intersection of Monterey Road and W. Dunne Ave. City of Morgan Hill. ELEVATION = 342.80' (NAVD88).

Demolition Key Notes

1. Existing tree to remain protected during demolition and construction
2. Remove existing rain water leader.
3. Remove existing storm drain.
4. Remove existing storm drain inlet
5. Existing curb inlet to remain, install sack filter & burlap bags per Erosion Control Plan
6. Protect existing storm drain inlet during demolition and construction. Install sack filter & burlap bags per Erosion Control Plan
7. Remove a portion of existing storm drain south of proposed Junction Box. See Grading Plan, Sheet C1.1
8. Existing concrete slab and walkway to remain protected during demolition and construction
9. Existing subdrain to remain and be protected during demolition and construction
10. Protect existing no-mow grass and associated irrigation system.

Demolition Hatch Legend

Existing Building

WESTON MILES
ARCHITECT
17500 Depot Street, Suite #12
Morgan Hill, CA 95037
1 •408 • 779 • 6686
• Architecture • Landscape •

REGISTERED ARCHITECT CHARLES D. WESTON No. C 18,552 EXPIRES 1-31-19 STATE OF CALIFORNIA

NOT VALID WITHOUT WET SIGNATURE

MH engineering Co.
CONSULTANT JOB NO:
216137.2

REGISTERED PROFESSIONAL ENGINEER HARINDER SINGH C49717 EXP. 9-30-2019 STATE OF CALIFORNIA

3-28-19

REVISIONS

1

2

2

Site Topography Map & Demo Plan

MORGAN HILL LIBRARY ADDITION

CITY OF MORGAN HILL
660 W MAIN AVE, MORGAN HILL, CA 95037

These drawings are instruments of service and are the property of WESTON MILES ARCHITECTS, INC. The designs and other information on the drawings are for use on the specified project and shall not be used otherwise without the expressed written permission of WESTON MILES ARCHITECTS, INC.

Written dimensions on these drawings shall have precedence over scaled dimensions. Contractors shall verify and be responsible for all dimensions and conditions on the job and the office shall be notified of any variations from the dimensions and conditions shown by these drawings. Shop details must be submitted to this office for approval before proceeding with fabrication.

© Copyrighted 2019

DATE: 03/28/2019

JOB NO: 15058

C1.0

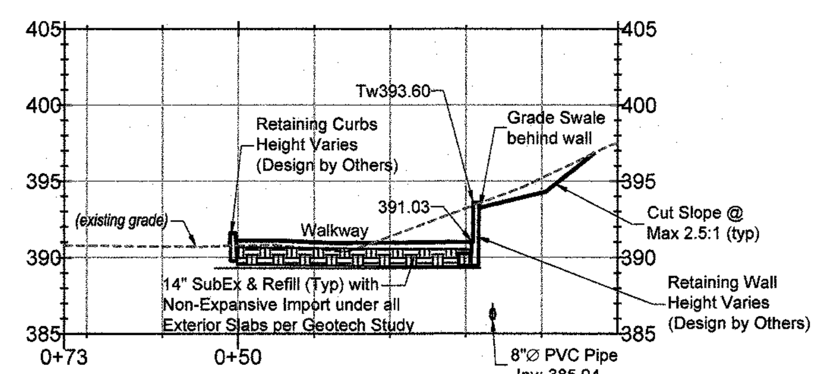

PROFILE: Section S-1
SCALE H: 1"=20' SCALE V: 1"=10'

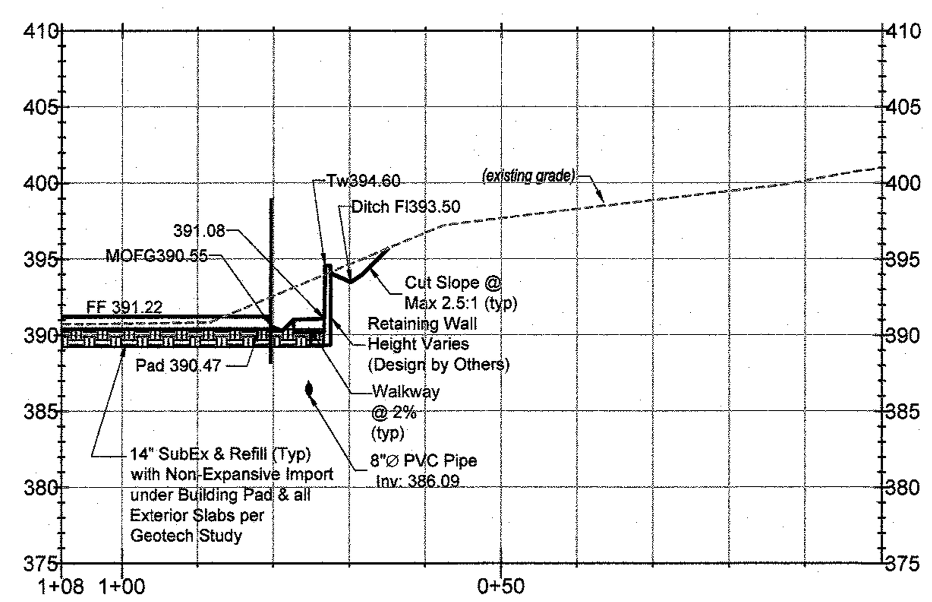

PROFILE: Section S-2
SCALE H: 1"=20' SCALE V: 1"=10'

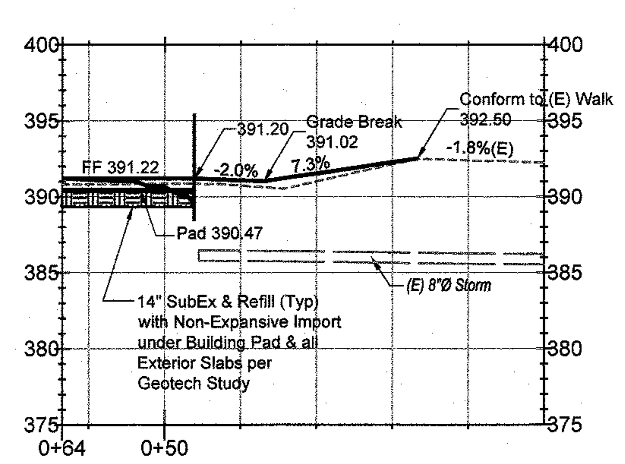

PROFILE: Section S-3
SCALE H: 1"=20' SCALE V: 1"=10'

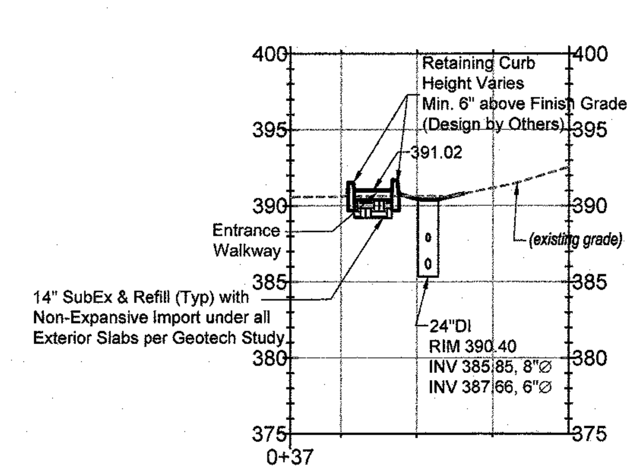

PROFILE: Section S-4
SCALE H: 1"=20' SCALE V: 1"=10'

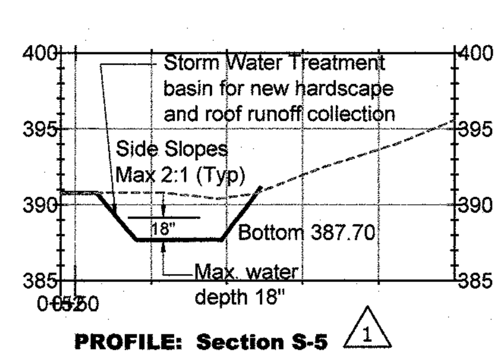

PROFILE: Section S-5 △1
SCALE H: 1"=20' SCALE V: 1"=10'

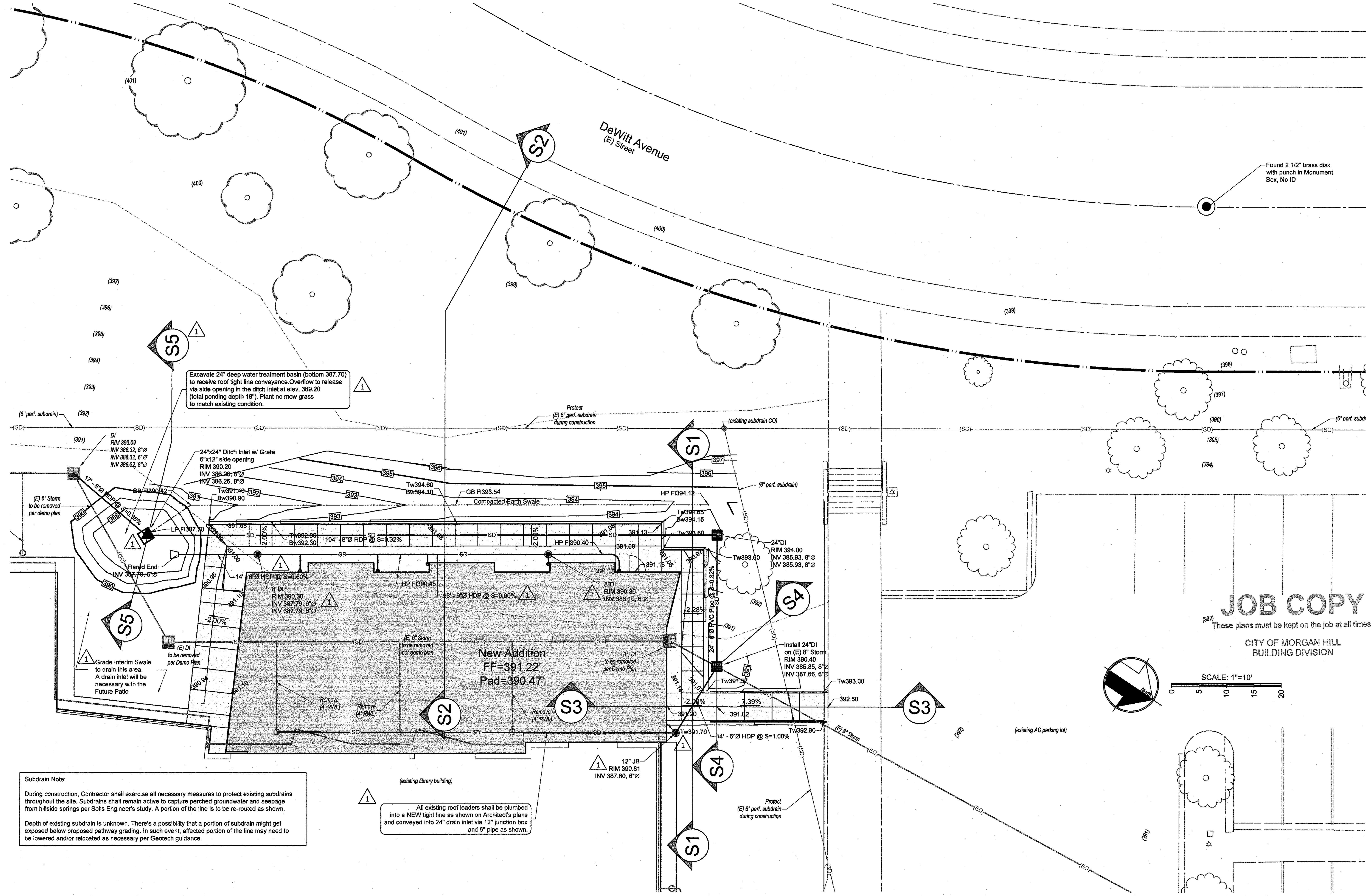

Subdrain Note:

During construction, Contractor shall exercise all necessary measures to protect existing subdrains throughout the site. Subdrains shall remain active to capture perched groundwater and seepage from hillside springs per Soils Engineer's study. A portion of the line is to be re-routed as shown.

Depth of existing subdrain is unknown. There's a possibility that a portion of subdrain might get exposed below proposed pathway grading. In such event, affected portion of the line may need to be lowered and/or relocated as necessary per Geotech guidance.

JOB COPY
These plans must be kept on the job at all times.
CITY OF MORGAN HILL
BUILDING DIVISION

* FOR ALL STORM PIPE COVER UNDER 2', ALL TRENCH BACKFILL SHALL CONSIST OF 2 SACKS/YD. CEMENT SLURRY TO A MIN. 6" ABOVE PIPE

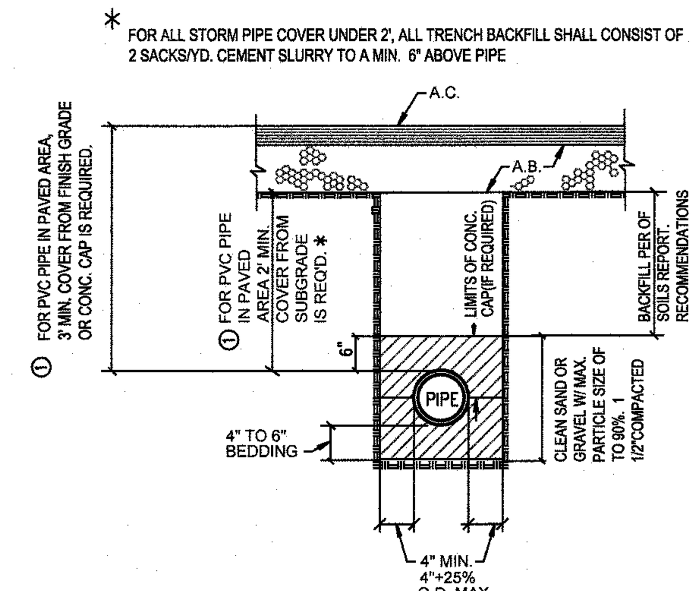

① HDP or PVC PIPE PER ASTM 3034 SDR-35; J-M RING-TITE OR APPROVED EQUAL.

Typical Storm Drain Trench
N.T.S.

GRADING and DRAINAGE NOTES

1. ALL AREAS TO RECEIVE FILL SHALL BE STRIPPED TO A DEPTH TO BE DETERMINED BY THE SOILS ENGINEER. ANY A.C. OR P.C.C. PAVING SHALL BE SCARIFIED AND REMOVED AND SUBGRADE PREPARED AND COMPACTED PER SOIL ENGINEER'S RECOMMENDATIONS PRIOR TO ANY FILLING.
2. ALL MATERIAL TO BE USED AS FILL WITHIN BUILDING PAD AREAS AND PARKING OR DRIVEWAY AREAS TO BE FREE OF ALL VEGETATION AND FOREIGN MATTER.
3. SITE COMPACTION SHALL COMPLY WITH RECOMMENDATIONS MADE IN GEOTECHNICAL STUDY BY 'GEO-LOGIC' DATED 3-15-2018.
4. STRIPPING MAY BE PLACED IN PLANTING AREA; ALL EXCESS STRIPPING SHALL BE HAULED AWAY. PAVING DEBRIS SHALL BE HAULED AWAY TO AN APPROVED DISPOSAL SITE.
5. ALL WORK SHOWN OR NOTED ON THESE PLANS SHALL BE DONE IN STRICT ACCORDANCE WITH THE RECOMMENDATIONS OF THE SOILS ENGINEER, ALL LOCAL, STATE AND FEDERAL MINIMUM STANDARDS AND THE LATEST EDITION OF THE CALIFORNIA BUILDING CODE. NOTIFY SOILS ENGINEER 4 WORKING DAYS PRIOR TO BEGINNING OF ANY GRADING.
6. CONNECTIONS TO EXISTING PUBLIC UTILITIES SHALL BE DONE WITH APPROVAL AND IN ACCORDANCE WITH THE UTILITY COMPANY'S OR PUBLIC AGENCY REQUIREMENTS AND STANDARDS.
7. CONTRACTORS SHALL PROTECT ALL EXISTING SITE IMPROVEMENTS NOT SCHEDULED FOR REMOVAL DURING CONSTRUCTION. THEY SHALL REPAIR ANY DAMAGE TO NEW CONDITION AT THEIR EXPENSE.
8. VERIFY ALL EXISTING SITE CONDITIONS, SITE DIMENSIONS AND GRADES PRIOR TO START OF WORK.
9. CONFORM TO THE RECOMMENDATIONS OF THE DRAWINGS, DETAILS AND SITE SOILS REPORT FOR COMPACTION, STRIPPING, GRADING PAVING, AND UTILITY TRENCHES.
10. SOIL COMPACTION TESTS SHALL BE PAID FOR BY THE OWNER/DEVELOPER AS PER NOTE 3.
11. ALL GRADING AND RELATED WORK SHALL BE PERFORMED IN ACCORDANCE WITH THE REQUIREMENTS OF THE CITY OF MORGAN HILL AND THE RECOMMENDATION OF THE SOILS ENGINEER.
12. CONTRACTOR SHALL VERIFY THE LOCATIONS OF ALL EXISTING SERVICES AND UNDERGROUND UTILITIES AND SEWERS. LOCATIONS SHOWN ON THE PLAN ARE APPROXIMATE AND SHOWN FOR GENERAL INFORMATION ONLY. CONTRACTOR SHALL CALL U.S.A. AT 800-642-2444 48 HOURS PRIOR TO UNDERGROUND WORK FOR FIELD LOCATOR SERVICE.
13. CONTRACTOR SHALL VERIFY THE LOCATIONS OF THE BUILDING AND PARKING IMPROVEMENTS FROM THE ARCHITECT'S DIMENSIONED DRAWINGS.
14. AN UPDATED SOILS LETTER IS PUBLISHED BY 'GEO-LOGIC' ON 3-15-2018. THAT STUDY IS HEREBY MADE A PART OF THE GRADING REQUIREMENTS. CONTACT SOILS ENGINEER AT (408) 778-2818.
15. ANY VOIDS CREATED BY STRUCTURE REMOVAL, TREE REMOVAL, SEPTIC TANK AND LEACH LINE OR ANY OTHER SITE ITEM REMOVAL MUST BE BACKFILLED WITH PROPERLY COMPACTED NATIVE SOILS THAT ARE FREE OF ORGANICS AND OTHER DELETERIOUS MATERIALS OR WITH APPROVED IMPORT FILL AND COMPACTED TO THE SOILS ENGINEERS RECOMMENDATIONS.
16. THE CONTRACTOR SHALL FOLLOW ALL APPLICABLE INDUSTRIAL SAFETY REGULATIONS. THE CITY OF MORGAN HILL AND ITS OFFICIALS, THE ENGINEER, AND THE OWNER SHALL NOT BE RESPONSIBLE FOR ENFORCING SAFETY REGULATIONS.
17. THE CONTRACTOR SHALL BE FULLY RESPONSIBLE FOR PLACEMENT OF ALL SAFETY DEVICES SUCH AS FENCING BARRICADES, SAFETY TAPE, ETC., AND HE SHALL FOLLOW ALL APPLICABLE INDUSTRIAL SAFETY REGULATIONS. THE CITY OF MORGAN HILL AND ITS OFFICIALS, THE ARCHITECT, AND THE OWNER SHALL NOT BE RESPONSIBLE FOR ENFORCING SAFETY REGULATIONS.
18. THE CONTRACTOR IS RESPONSIBLE FOR THE PROTECTION OR PROPER RESETTING OF ALL EXISTING MONUMENTS AND OTHER SURVEY MARKERS. ANY SURVEY MONUMENTS DESTROYED BY THE CONTRACTOR SHALL BE REPLACED IN ACCORDANCE WITH THE STATE LAND SURVEYOR'S ACT AT THE CONTRACTOR'S OWN EXPENSE.
19. THE CONTRACTOR SHALL POTHOLE AND VERIFY ALL EXISTING UTILITY LOCATIONS AND ELEVATIONS PRIOR TO COMMENCEMENT OF WORK IN THAT AREA.
20. ANY DEVIATION FROM THESE PLANS WITHOUT PRIOR APPROVAL FROM THE DESIGN ENGINEER SHALL BE AT THE CONTRACTOR'S OWN RISK AND EXPENSE.
21. PROVIDE EROSION CONTROL PLANTING FOR ALL FRESH CUT AND FILL SLOPES AND ON ALL DISTURBED SURFACES OTHER THAN PAVED OR GRAVEL SURFACES. PERMANENT
22. CONTRACTOR SHALL BE RESPONSIBLE FOR THE PLACEMENT AND MAINTENANCE OF ALL EROSION CONTROL DEVICES AS SPECIFIED BY THE ENGINEER OF WORK AND APPROVED BY THE CITY ENGINEER. THESE DEVICES SHALL BE IN PLACE OR BE READY TO PLACE FROM SEPTEMBER 15TH TO MAY 1ST. IN THE EVENT THAT THE DEVICES ARE NOT PERMANENTLY IN PLACE THEY SHALL BE PLACED IN THE EVENT A FORECAST FOR RAIN EXCEEDS 30%. AN EMERGENCY CREW SHALL BE AVAILABLE 24 HRS A DAY IN THE EVENT AN EROSION PROBLEM SHOULD OCCUR. A RESPONSIBLE PERSON AND HIS PHONE NUMBER SHALL BE KEPT ON CITY FILES.
23. THE CONTRACTOR SHALL BE RESPONSIBLE TO CONTACT THE ENGINEER OF RECORD AND THE CITY INSPECTOR AT LEAST 24 HOURS PRIOR TO POUR OF CONCRETE IN ORDER TO VERIFY LINE AND GRADE OF THE FORMWORK AND SUBGRADE. IN THE EVENT THE CONTRACTOR POURS CONCRETE WITHOUT PROPER NOTIFICATION HE IS RESPONSIBLE FOR REMOVAL AND REPLACEMENT COSTS OF THE IMPROVEMENTS CONSTRUCTED IN THE EVENT THE IMPROVEMENTS ARE REJECTED. ALL IMPROVEMENTS CONSTRUCTED WITHOUT PROPER FORM INSPECTION WILL BE AT THE CONTRACTOR'S RISK.
24. CONTRACTOR SHALL VERIFY ALL ITEMS SHOWN ON PLANS. SHOULD ANY DISCREPANCIES ARISE, CONTRACTOR SHALL NOTIFY ENGINEER IMMEDIATELY. SHOULD CONTRACTOR PROCEED WITHOUT NOTIFYING THE ENGINEER HE SHALL DO SO AT HIS OWN RISK.

WESTON MILES
ARCHITECT
17500 Depot Street, Suite #12
Morgan Hill, CA 95037
1 •408 • 779 • 6686
• Architecture • Landscape •

LICENSED ARCHITECT · CHARLES WESTON · No. C 18,552 · RENEWAL 8-31-19 · STATE OF CALIFORNIA
NOT VALID WITHOUT WET SIGNATURE

MH engineering Co.
CONSULTANT JOB NO: 216137.2

REGISTERED PROFESSIONAL ENGINEER · HARINDER SINGLA · C49717 · EXP. 9-30-2019 · STATE OF CALIFORNIA
3-28-19

REVISIONS
△1 03/28/2019 PLAN REVIEW #1
△2
△2

Grading and Drainage Plan

MORGAN HILL LIBRARY ADDITION

CITY OF MORGAN HILL
660 W MAIN AVE, MORGAN HILL, CA 95037

These drawings are instruments of service and are the property of WESTON MILES ARCHITECTS, INC. All designs and other information on the drawings are for use on the specified project and shall not be used otherwise without the expressed written permission of WESTON MILES ARCHITECTS, INC.

Written dimensions on these drawings shall have precedence over scaled dimensions. Contractors shall verify and be responsible for all dimensions and conditions on the job and this office shall be notified of any variations from the dimensions and conditions shown by these drawings. Shop details shall be submitted to this office for approval before proceeding with fabrication.

© Copyrighted 2019

DATE: 03/28/2019
JOB NO: 15058

C1.1

EC-4 Hydroseeding

Implementation

In order to select appropriate hydroseeding mixtures, an evaluation of site conditions shall be performed with respect to:

- Soil conditions
- Site topography
- Seasons and climate
- Vegetation types
- Maintenance requirements
- Sensitive adjacent areas
- Water availability
- Plans for permanent vegetation

The local office of the U.S.D.A. Natural Resources Conservation Service (NRCS) is an excellent source of information on appropriate seed mixes.

The following steps shall be followed for implementation:

- Avoid use of hydroseeding in areas where the BMP would be incompatible with future earthwork activities and would have to be removed.
- Hydroseeding can be accomplished using a multiple step or one step process. The multiple step process ensures maximum direct contact of the seeds to soil. When the one step process is used, the application of fiber, seed, and mulch in a slurry mix and shall be increased to compensate for all seeds not having direct contact with the soil.
- Prior to application, roughen the area to be seeded with the furrows traveling along the contours.
- Apply a straw mulch to keep seeds in place and to moderate soil moisture and temperature until the seeds germinate and grow.
- All seeds shall be in conformance with the California State Seed Law of the Department of Agriculture. Each seed bag shall be delivered to the site sealed and clearly marked as to species, purity, percent germination, dealer's guarantee, and date of test. The container shall be labeled to clearly reflect the amount of Pure Live Seed (PLS) contained. All legume seed shall be pellet inoculated. Inoculant reserves shall be species specific and shall be applied at a rate of a lb of inoculant per 100 lb seed.
- Commercial fertilizer shall conform to the requirements of the California Food and Agricultural Code. Fertilizer shall be pelleted or granular form.
- Follow-up applications shall be made as needed to cover weak spots and to maintain adequate seed protection.
- Avoid over spray onto roads, sidewalks, drainage channels, existing vegetation, etc.

Costs

Average cost for installation and maintenance may vary from as low as $300 per acre for flat slopes and stable soils, to $1000 per acre for moderate to steep slopes and/or erosive soils.

Notes: EC-4 Hydroseeding

Inspection and Maintenance

- Inspect BMPs prior to forecast rain, daily during extended rain events, after rain events, weekly during rainy season, and at two-week intervals during the non-rainy season.
- Areas where erosion is evident shall be repaired and BMPs re-applied as soon as possible. Care should be exercised to minimize the damage to protected areas while making repairs, as any area damaged will require re-application of BMPs.
- Where seeds fail to germinate, or they germinate and die, the area must be re-seeded, fertilized, and mulched within planting season, using not less than half the original application rates.
- Irrigation systems, if applicable, should be inspected daily while in use to identify system malfunctions and line breaks. When line breaks are detected, the system must be shut down immediately and breaks repaired before the system is put back into operation.
- Irrigation systems shall be inspected for complete coverage and adjusted as needed to maintain complete coverage.

SE-5 Fiber Rolls

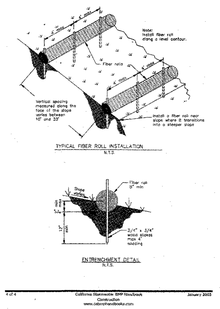

Notes: SE-5 Fiber Rolls

Installation

- Locate fiber rolls on level contours spaced as follows:
  - Slope inclination of 4:1 (H:V) or flatter: Fiber rolls should be placed at a maximum interval of 20 ft.
  - Slope inclination between 4:1 and 2:1 (H:V): Fiber Rolls should be placed at a maximum interval of 15 ft. (a closer spacing is more effective).
  - Slope inclination 2:1 (H:V) or greater: Fiber Rolls should be placed at a maximum interval of 10 ft. (a closer spacing is more effective).
- Turn the ends of the fiber roll up slope to prevent runoff from going around the roll.
- Stake fiber rolls into a 2 to 4 in. deep trench with a width equal to the diameter of the fiber roll.
  - Drive stakes at the end of each fiber roll and spaced 4 ft maximum on center.
  - Use wood stakes with a nominal classification of 0.75 by 0.75 in. and minimum length of 24 in.
- If more than one fiber roll is placed in a row, the rolls should be overlapped, not abutted.

Inspection and Maintenance

- Inspect BMPs prior to forecast rain, daily during extended rain events, after rain events, weekly during the rainy season, and at two-week intervals during the non-rainy season.
- Repair or replace split, torn, unraveling, or slumping fiber rolls.
- If the fiber roll is used as a sediment capture device, or as an erosion control device to maintain sheet flows, sediment that accumulates in the BMP must be periodically removed in order to maintain BMP effectiveness. Sediment should be removed when sediment accumulation reaches one-half the designated sediment storage depth, usually one-half the distance between the top of the fiber roll and the adjacent ground surface. Sediment removed during maintenance may be incorporated into earthwork on the site of disposed at an appropriate location.
- If fiber rolls are used for erosion control, such as in a mini check dam, sediment removal should not be required as long as the system continues to control the grade. Sediment control BMPs will likely be required in conjunction with this type of application.

Storm Drain Inlet Protection SE-10

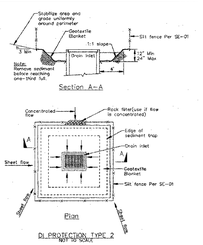

Notes
1. For use in cleared and grubbed and in graded areas.
2. Shape basin so that longest inflow area faces longest length of trap.
3. For downslope flows, shape basin in 2:1 ratio with length oriented towards direction of flow.

SE-10 Storm Drain Inlet Protection

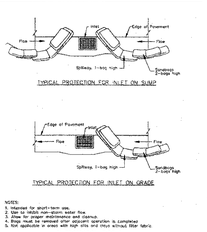

Notes: SE-10 Storm Drain Inlet Protection

Installation

- **DI Protection Type 2 - Excavated Drop Inlet Sediment Trap** - The excavated drop inlet sediment trap (Type 2) is shown in the attached figures. Install filter fabric fence in accordance with DI Protection Type 1. Size excavated trap to provide a minimum storage capacity calculated at the rate 67 yd3/acre of drainage area.
- **Inspection and Maintenance**
- Inspect BMPs prior to forecast rain, daily during extended rain events, after rain events, weekly during the rainy season, and at two-week intervals during the non-rainy season.
- Filter Fabric Fences. If the fabric becomes clogged, torn, or degrades, it should be replaced. Make sure the stakes are securely driven in the ground and are in good shape (i.e., not bent, cracked, or splintered, and are reasonably perpendicular to the ground). Replace damaged stakes.
- Gravel Filters. If the gravel becomes clogged with sediment, it must be carefully removed from the inlet and either cleaned or replaced. Since cleaning gravel at a construction site may be difficult, consider using the sediment-laden stone as fill material and put fresh stone around the inlet. Inspect bags for holes, gashes, and snags, and replace bags as needed. Check gravel bags for proper arrangement and displacement.
- Sediment that accumulates in the BMP must be periodically removed in order to maintain BMP effectiveness. Sediment should be removed when the sediment accumulation reaches one-third of the barrier height. Sediment removed during maintenance may be incorporated into earthwork on the site ore disposed at an appropriate location.
- Remove storm drain inlet protection once the drainage area is stabilized.
- Clean and regrade area around the inlet and clean the inside of the storm drain inlet as it must be free of sediment and debris at the time of final inspection.

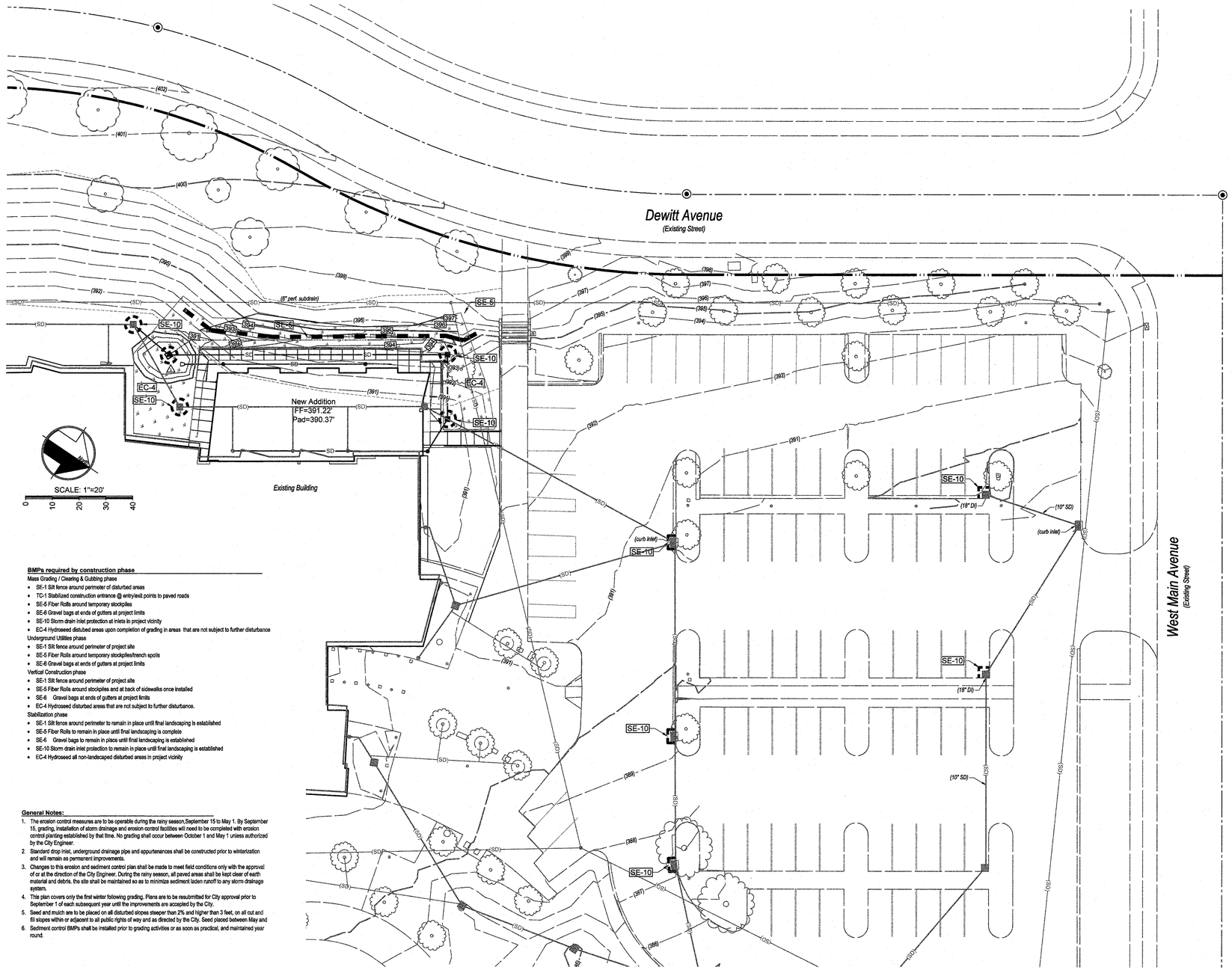

BMPs required by construction phase

Mass Grading / Clearing & Gubbing phase

- SE-1 Silt fence around perimeter of disturbed areas
- TC-1 Stabilized construction entrance @ entry/exit points to paved roads
- SE-5 Fiber Rolls around temporary stockpiles
- SE-6 Gravel bags at ends of gutters at project limits
- SE-10 Storm drain inlet protection at inlets in project vicinity
- EC-4 Hydroseed disturbed areas upon completion of grading in areas that are not subject to further disturbance

Underground Utilities phase

- SE-1 Silt fence around perimeter of project site
- SE-5 Fiber Rolls around temporary stockpiles/french spoils
- SE-6 Gravel bags at ends of gutters at project limits

Vertical Construction phase

- SE-1 Silt fence around perimeter of project site
- SE-5 Fiber Rolls around stockpiles and at back of sidewalks once installed
- SE-6 Gravel bags at ends of gutters at project limits
- EC-4 Hydroseed disturbed areas that are not subject to further disturbance.

Stabilization phase

- SE-1 Silt fence around perimeter to remain in place until final landscaping is established
- SE-5 Fiber Rolls to remain in place until final landscaping is complete
- SE-6 Gravel bags to remain in place until final landscaping is established
- SE-10 Storm drain inlet protection to remain in place until final landscaping is established
- EC-4 Hydroseed all non-landscaped disturbed areas in project vicinity

General Notes:

1. The erosion control measures are to be operable during the rainy season,September 15 to May 1. By September 15, grading, installation of storm drainage and erosion control facilities will need to be completed with erosion control planting established by that time. No grading shall occur between October 1 and May 1 unless authorized by the City Engineer.
2. Standard drop inlet, underground drainage pipe and appurtenances shall be constructed prior to winterization and will remain as permanent improvements.
3. Changes to this erosion and sediment control plan shall be made to meet field conditions only with the approval of or at the direction of the City Engineer. During the rainy season, all paved areas shall be kept clear of earth material and debris. the site shall be maintained so as to minimize sediment laden runoff to any storm drainage system.
4. This plan covers only the first winter following grading. Plans are to be resubmitted for City approval prior to September 1 of each subsequent year until the improvements are accepted by the City.
5. Seed and mulch are to be placed on all disturbed slopes steeper than 2% and higher than 3 feet, on all cut and fill slopes within or adjacent to all public rights of way and as directed by the City. Seed placed between May and
6. Sediment control BMPs shall be installed prior to grading activities or as soon as practical, and maintained year round.

Legend

- SE-5 Fiber Rolls
- SE-10 Storm drain inlet protection
- EC-4 Hydroseed with Tacifier & Mulch in disturbed areas

JOB COPY

These plans must be kept on the job at all times.

CITY OF MORGAN HILL
BUILDING DIVISION

WESTON MILES
ARCHITECT
17500 Depot Street, Suite #12
Morgan Hill, CA 95037
T • 408 • 779 • 6686
• Architecture • Landscape •

REGISTERED ARCHITECT No. C 18,552 EXPIRES 1-31-19 STATE OF CALIFORNIA

MH engineering Co.
CONSULTANT JOB NO:
216137.2

REGISTERED PROFESSIONAL ENGINEER HARVINDER SINGLA C49717 EXP. 9-30-2019 STATE OF CALIFORNIA
3-28-19

REVISIONS
1 03/28/2019 PLAN REVIEW #1
2
2

Erosion & Sediment Control Plan

MORGAN HILL LIBRARY ADDITION

CITY OF MORGAN HILL
660 W MAIN AVE, MORGAN HILL, CA 95037

These drawings and instruments of service and are the property of WESTON MILES ARCHITECTS, INC. All designs and other information on the drawings are for use on the specified project and shall not be used otherwise without the expressed written permission of WESTON MILES ARCHITECTS, INC.

Written dimensions on these drawings shall have precedence over scaled dimensions. Contractors shall verify and be responsible for all dimensions and conditions on the job and this office shall be notified of any variations from the dimensions and conditions shown by these drawings. Shop details shall be submitted to this office for approval before proceeding with fabrication.

© Copyrighted 2019

DATE: 03/28/2019

JOB NO: MH 216137.2

C1.2

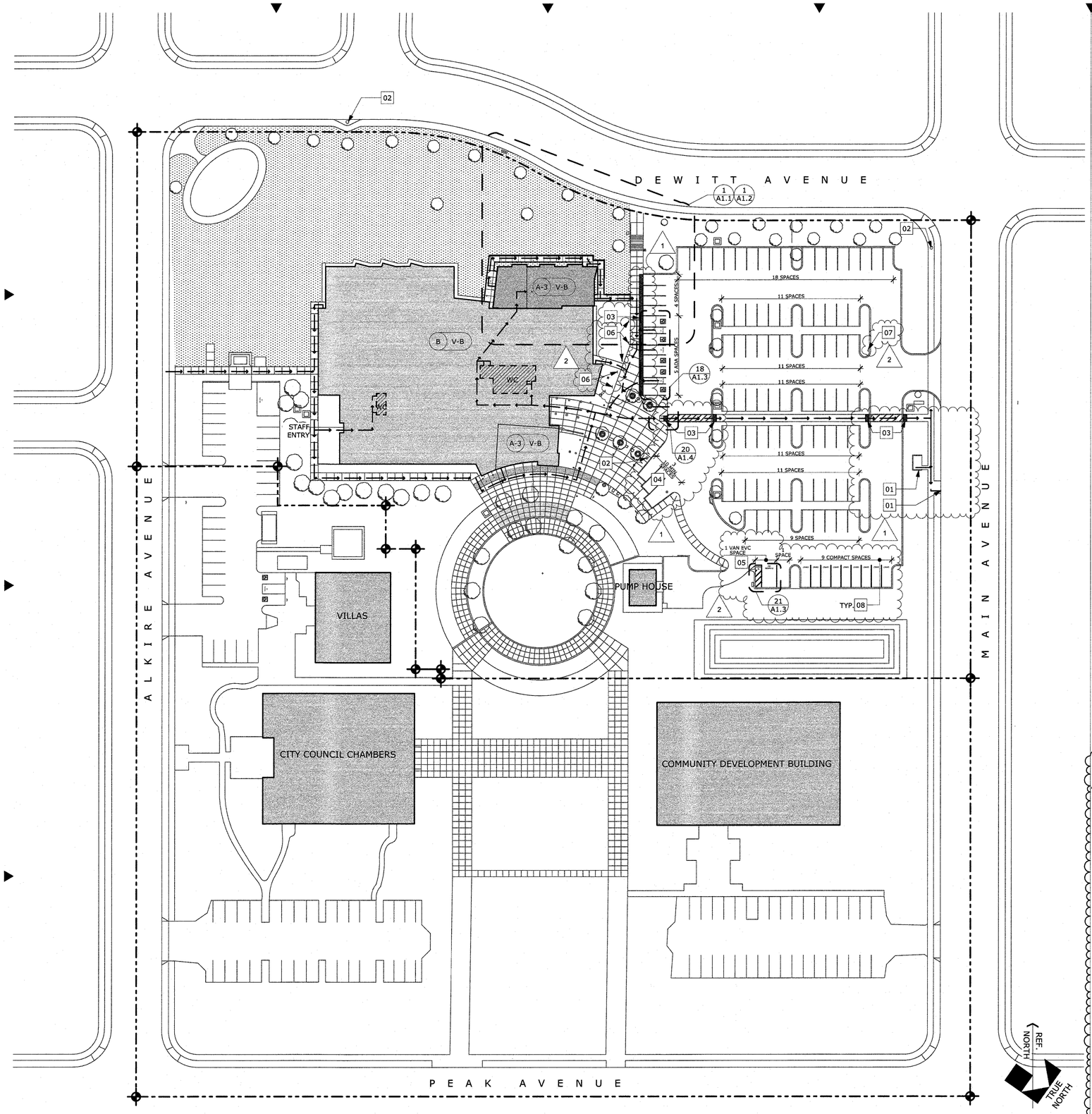

OVERALL SITE PLAN
SCALE: 1" = 40'

BUILDING & SITE DATA

APN #	773-02-006
SITE ACREAGE	5.24
ZONING	PUBLIC FACILITIES
DISTRICT	
GENERAL PLAN DESIGNATION	PUBLIC FACILITIES
OCCUPANCY TYPE:	B, A-3
NUMBER OF STORIES:	1
TYPE OF CONSTRUCTION:	V-B
FIRE SPRINKLERED:	THROUGHOUT
BUILDING AREA:	
EXISTING BUILDING	28,096 SQ.FT.
NEW ADDITION	2,490 SQ.FT.
NEW TOTAL BUILDING AREA	30,586 SQ. FT.

SITE & BUILDING ANALYSIS

TOTAL BUILDING AREA 30,586 SQ. FT.

W = 30 (MAX W/30 = 1)

SITE ANALYSIS OCCUPANCY B = 27,852 SQ.FT.

If = [830/830 - 0.25] 30/30 = 0.75
Aa = 36,000 + (9,000 x .75)
Aa = 36,000 + 6,750
Aa = 42,750

OCCUPANCY A-3 = (1,376 + 1,422) = 2,776 SQ. FT.

If = [830/830 - 0.25] 30/30 = 0.75
Aa = 24,000 + (6,000 x .75)
Aa = 24,000 + 4,500
Aa = 28,500

SUM OF RATIOS

27,908 / 42,750 = 0.65 2,776 / 28,500 = 0.09

0.65 + 0.09 = 0.74 < 1 : **OK**

TOTAL BUILDING AREA = 30,586 SQ. FT.

LOT COVERAGE

SITE AREA: 5.24 ACRES = 228,254 SF

% BUILDING COVERAGE:
<E> PUMP HOUSE *698 SF*
<E> LIBRARY *28,096 SF*
(N) LIBRARY ADDITION 2,490 SF
TOTAL BUILDING COVERAGE 31,284 SF = 13.7%

% PARKING:
<E> PARKING COVERAGE = 51,274 = 22.4%

% LANDSCAPE: (*<E> COVERAGE 121,431 SF*)
NEW LANDSCAPE COVERAGE 117,923 SF = 51.7%

% HARDSCAPE: (*<E> COVERAGE 22,299 SF*)
NEW HARDSCAPE COVERAGE 23,197 SF = 10.2%

PLUMBING REQUIREMENTS

PLUMBING FIXTURE COUNT (2016 CPC, TABLE 422.1)

GROUP B 22,852 NET SQ FT /200 SQ FT/PERSON = 114 OCC
114 OCC / 2 = 57 MEN & 57 WOMEN = 1 URINAL MEN
2 WC MEN
1 LAV MEN
4 WC WOMEN
2 LAV WOMEN

GROUP A3 2,776 NET SQ FT / 30 SQ FT/PERSON = 92 OCC
92 OCC / 2 = 46 MEN & 46 WOMEN = 1 URINAL MEN
1 WC MEN
1 LAV MEN
2 WC WOMEN
1 LAV WOMEN

TOTAL PLUMBING FIXTURES REQUIRED:	MEN	2 URINAL	3 WC	2 LAV
	WOMEN		6 WC	3 LAV
PLUMBING FIXTURES PROVIDED:	MEN	2 URINAL	2 WC	2 LAV
	WOMEN		4 WC	2 LAV
	UNISEX		4 WC	4 LAV
TOTAL PROVIDED FIXTURES:		2 URINAL	10 WC	8 LAV

TOTAL DRINKING FOUNTAINS REQUIRED: 258 OCC TOTAL / 150 OCC (1 DF / 150 OCC) = 2 DF TOTAL

TOTAL DRINKING FOUNTAINS PROVIDED: = 2 DF TOTAL

SEE SHEET A2.01 EXISITNG RESTROOMS FOR PROVIDED FIXTURES

ACCESSIBILITY NOTES

1. FREE, COMMON, ACCESS ROUTE WITHOUT ANY ABRUPT VERTICAL CHANGES EXCEEDING 1/2" BEVELED AT 1:2 MAXIMUM SLOPE, EXCEPT THAT LEVEL CHANGES DO NOT EXCEED 1/4" VERTICAL. THE PATH'S SURFACE SHALL BE AT LEAST 48" WIDE, SLIP RESISTANT, STABLE, FIRM AND SMOOTH. PASSING SPACES (CBC 11B-403.5.3) SHALL BE AT LEAST 60" X 60" ARE LOCATED NOT MORE THAN 200' APART. PARTS OF POT W/CONTINUOUS GRADIENTS SHALL HAVE 60" LEVEL AREAS (CBC 11B-403.7) NOT MORE THAN 400' APART. THE CROSS SLOPE SHALL OT EXCEED 2% AND THE SLOPES IN THE DIRECTION OF TRAVEL THAT EXCEED 5% SHALL BE CONSTRUCTED AS ACCESSIBLE RAMPS. THE P.O.T. SHALL BE FREE OF OVERHEAD OBSTRUCTIONS UP TO 80" MINIMUM (CBC 11B-307.4). OBJECTS PROJECTING FROM WALLS W/LEADING EDGES BETWEEN 27" AND 80" A.F.F. SHALL NOT PROTRUDE MORE THAN 4" FROM THE WALL (CBC 11B-307). THE P.O.T. SHALL COMPLY W/CBC 11B-403.
2. ARCHITECT AND CONTRACTOR TO VERIFY THAT ALL BARRIERS IN THE PATH OF TRAVEL HAVE BEEN REMOVED PER SECTION 11B-403.
3. ACCESSIBLE PATH OF TRAVEL SHALL BE SLIP RESISTANT.
4. ACCESSIBLE GROUND FLOOR ENTRY/ EXITS SHALL COMPLY WITH: CBC 11B-404.2.4.
   - 24" STRIKE SIDE CLEARANCE AT EXTERIOR PULL SIDE OF DOORS
   - 60" MIN LEVEL AREA (2% MAX SLOPE) PERPENDICULAR TO DOOR @ EXTERIOR & INTERIOR
   - LEVEL LANDING AREA CONNECTED TO ACCESSIBLE ROUTE THROUGHOUT SITE.

KEY NOTES

##

01	<E> BUS SHELTER & BUS STOP - REFERENCE DETAIL 2/A1.4
02	<E> FIRE HYDRANT TO REMAIN PROTECTED DURING DEMOLITION AND RECONSTRUCTION. COORDINATE W/ FIRE INSPECTOR DURING CONSTRUCTION TO REMAIN OPERATIONAL
03	SURFACE APPLIED TACTILE WARNING - 36" MIN. IN DIRECTION OF TRAVEL. SEE DETAIL 3/A1.4
04	<E> 10 MINUTE PARKING SPACES
05	<E> ELECTRIC VEHICLE CHARGING STATION SPACE - RESTRIPE FOR VAN ACCESSIBLITY
06	<E> ACCESSIBLE PARKING STALL SIGN PER DETAIL 9/A1.3
07	<E> ACCESSIBLE PARKING ENTRANCE SIGN PER DETAIL 9/A1.3
08	REMOVE <E> STRIPING AND RESTRIPE FOR 9 8'-0" WIDE COMPACT PARKING SPACES

SYMBOL LEGEND

PROPERTY LINE
ACCESSIBLE PATH OF TRAVEL
BLDG # (N) BLDG ADDITION
BLDG # <E> BLDG
WC ACCESSIBLE BATHROOMS LOCATED WITHIN BLDG

PARKING ANALYSIS

PARKING SPACES REQUIRED
PER (MH ZONING 18.50.020): *NO SPECIFIC STANDARD LISTED FOR THIS USE*
PARKING SPACES PROVIDED: 105 SPACES, INCL. 5 ACCESS. STALLS

* NUMBER OF PARKING SPACES PROVIDED PER 2016 CBC 11B-208, TABLE 11B-208.2

STANDARD STALLS	87 PROVIDED
COMPACT STALLS	9 PROVIDED
10 MIN. ZONE STALLS	3 PROVIDED
EVCS VAN STALL	1 PROVIDED
ACCESSIBLE STALLS (101-150*)	5 REQUIRED
ACCESSIBLE STALLS	5 PROVIDED
VAN ACCESSIBLE STALLS	1 PROVIDED
TOTAL PARKING PROVIDED	105 PROVIDED

VICINITY MAP

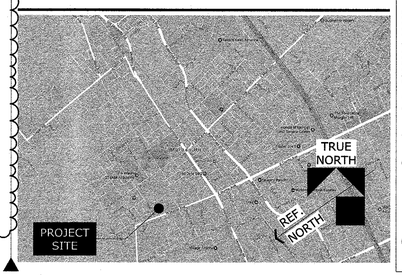

WESTON MILES
ARCHITECTS
17500 Depot Street, Suite #200
Morgan Hill, CA 95037
1 •408 • 779 • 6686
• Architecture • Landscape •

LICENSED ARCHITECT Mr. Weston Miles No. C 18,552 EXPIRES 06-30-20 STATE OF CALIFORNIA
NOT VALID WITHOUT SIGNATURE

REVISIONS
1 03/28/2019 PLAN REVIEW #2
2 05/01/2019 PLAN REVIEW #3
3

JOB COPY
These plans must be kept on the job at all times.
CITY OF MORGAN HILL BUILDING DIVISION
BUILDING DEPT. MAY 02 2019 CITY OF MORGAN HILL

OVERALL SITE PLAN

MORGAN HILL LIBRARY ADDITION

CITY OF MORGAN HILL
660 W MAIN AVE, MORGAN HILL, CA 95037

These drawings are instruments of service and are the property of WESTON MILES ARCHITECTS, INC. All designs and other information on the drawings are for use on the specified project and shall not be used otherwise without the expressed written permission of WESTON MILES ARCHITECTS, INC.

Written dimensions on these drawings shall have precedence over scaled dimensions. Contractors shall verify and be responsible for all dimensions and conditions on the job and this office shall be notified of any variations from the dimensions and conditions shown by these drawings. Shop details shall be submitted to this office for approval before proceeding with fabrication.

© Copyrighted 2019

DATE: 02/8/2019
JOB NO: 15058

A1.0

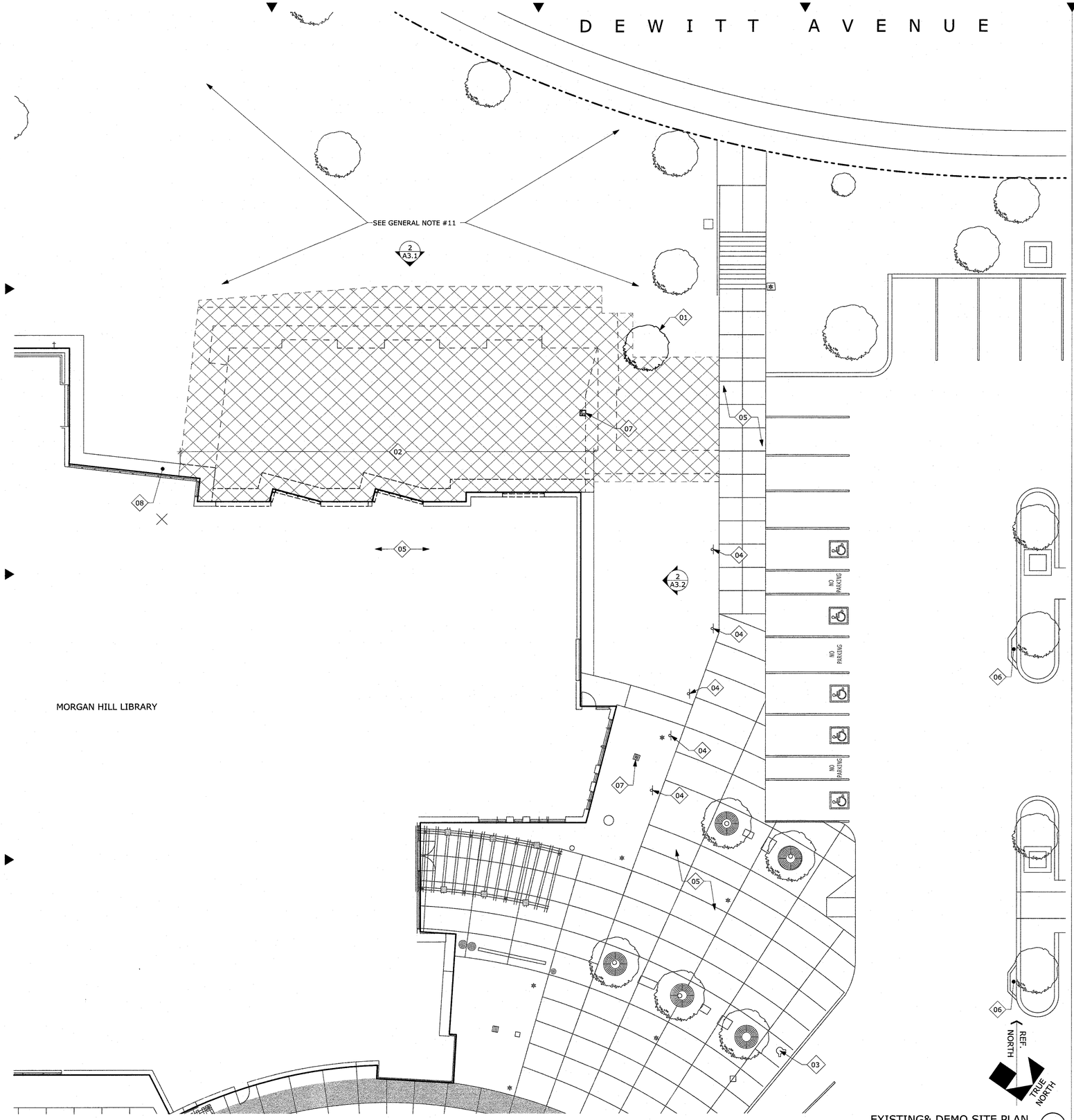

EXISTING& DEMO SITE PLAN 1
SCALE: 3/32" = 1'-0"

DEMOLITION KEY NOTES

##

- 01 <E> TREE & ROOT BALL TO BE REMOVED
- 02 REMOVE PORTION OF <E> MOW STRIP
- 03 <E> FIRE HYDRANT TO REMAIN PROTECTED DURING DEMOLITION AND RECONSTRUCTION. COORDINATE W/ FIRE INSPECTOR DURING CONSTRUCTION TO REMAIN OPERATIONAL
- 04 VERIFY IF EXISTING SIGN MEETS CURRENT CODE STANDARDS. IF NOT <E> SIGN TO BE REPLACED WITH NEW PER 9/A1.3 (1)
- 05 <E> CONC. SLAB TO BE PROTECTED THROUGHOUT CONSTRUCTION.
- 06 <E> CURB INLET TO REMAIN - INSTALL INLET SACK FILTER & BURLAP BAGS
- 07 FOR S.D. SCOPE SEE CIVIL DRAWINGS
- 08 REMOVE AS LITTLE AS POSSIBLE OF <E> MOW STRIP - REPLACE AS PART OF SCOPE OF WORK

SYMBOL LEGEND

- PROPERTY LINE
- ITEMS TO BE DEMOLISHED
- REMOVE ALL LANDSCAPE, IRRIGATION, UNDERGROUND UTILITES AND CAP OFF - COORDINATE W/NEW GRADING & DRAINAGE & IRRIGATION PLANS
- <E> TALL LIGHT FIXTURE
- SHORT LIGHT FIXTURE

GENERAL NOTES

1. ALL WORK SHALL BE DONE IN ACCORDANCE WITH THE FOLLOWING:
   A. APPLICABLE SECTIONS OF THE STATE OF CALIFORNIA'S DEPARTMENT OF TRANSPORTATION STANDARD SPECIFICATIONS, LATEST EDITION, HEREINAFTER CALLED "CALTRANS";
   B. CALIFORNIA PLUMBING CODE AND CALIFORNIA BUILDING CODE PROVISIONS;
   C. AWWA STANDARD SPECIFICATIONS;
   D. CITY OF MORGAN HILL DESIGN STANDARDS WHERE APPLICABLE;
   E. STANDARDS OF THE UNITED STATES DEPARTMENT OF LABOR, OCCUPATIONAL SAFETY AND HEALTH ADMINISTRATION, OFFICE OF STANDARDS AND RULES OF THE STATE DIVISION OF INDUSTRIAL SAFETY;
   F. THESE PLANS AND DETAILS SHOWN HEREON. WHERE CONFLICTS EXIST BETWEEN ANY OF THE ABOVE LISTED SPECIFICATIONS THE MOST STRINGENT SPECIFICATION SHALL PREVAIL.
2. CONTRACTOR SHALL VERIFY LOCATION OF ALL <E> ABOVE GROUND UTILITIES AND PROVIDE FOR THEIR TEMPORARY DISCONNECTION, PROTECTION, REMOVAL AND/ OR STORAGE AS MAY BE REQUIRED DURING CONSTRUCTION. CONTRACTOR SHALL COORDINATE WITH THE COUNTY/DISTRICT TO DETERMINE WHETHER TEMPORARY SERVICES ARE NECESSARY.
3. ALL SPOILS, DEBRIS, AND INCIDENTAL ITEMS SHALL BE HAULED OFF SITE BY CONTRACTOR AND BE DISPOSED OF IN A LAWFUL MANNER AS IT ACCUMULATES.
4. CONTRACTOR SHALL TAKE CARE NOT TO DAMAGE IN ANY WAY, ANY EXISTING ELEMENTS NOT DESIGNATED FOR REMOVAL. SUCH DAMAGE IS THE RESPONSIBILITY OF THE CONTRACTOR AT NO ADDITIONAL COST TO THE COUNTY/DISTRICT.
5. COORDINATE SHUT-OFF OF ALL UTILITIES PRIOR TO ANY DEMOLITION.
6. CONTRACTOR IS TO PROTECT AND KEEP <E> TREES NOT MARKED FOR RELOCATION OR REMOVAL.
7. THE SITE MUST BE CLEANED AT THE END OF EACH BUSINESS DAY.
8. CONTRACTOR TO MAINTAIN A SAFE, SECURE SITE.
9. THIS DRAWING IS TO OUR BEST KNOWLEDGE AND REFLECTS THE <E> SITE CONDITIONS.
10. IT IS THE RESPONSIBILITY OF THE CONTRACTOR TO SECURE ALL PERMITS NECESSARY TO PERFORM THE WORK, INCLUDING BUT NOT LIMITED TO WORK IN THE PUBLIC RIGHT-OF-WAY, TREE REMOVAL, AND UTILITY MODIFICATIONS.
11. ALL KNOWN EXISTING UTILITY LINES ARE SHOWN FOR INFORMATION ONLY. CONTRACTOR SHALL EXERCISE ALL NECESSARY CAUTION TO AVOID DAMAGE TO ANY EXISTING UTILITY LINES OR FACILITIES TO REMAIN IN PLACE. WHETHER OR NOT SUCH LINES OR FACILITIES ARE SHOWN ON THESE PLANS, AND SHALL BEAR FULL RESPONSIBILITY FOR ANY DAMAGE THERETO. CONTRACTOR IS ADVISED TO CONTACT UNDERGROUND SERVICE ALERT (USA) AT (800) 642-2444 OR A PRIVATE UNDERGROUND LOCATER SERVICE (AT CONTRACTOR'S EXPENSE) AND THE AFFECTED UTILITY COMPANY FOR MARKING UNDERGROUND LINES PRIOR TO BEGINNING WORK.
12. TO REDUCE CONSTRUCTION DUST THESE CONTROL MEASURES SHALL BE REQUIRED DURING DEMOLITION/CONSTRUCTION
    - WATER ALL ACTIVE CONSTRUCTION AREAS AT LEAST TWICE DAILY
    - COVER ALL TRUCKS HAULING SOIL, SAND, OR LOOSE MATERIALS OR REQUIRE ALL TRUCKS TO MAINTAIN AT LEAST TWO FEET OF FREEBOARD.
    - SWEEP STREET DAILY (WITH WATER SWEEPERS) IF VISIBLE SOIL MATERIAL IS CARRIED INTO ADJACENT PUBLIC STREETS.
    - ENCLOSE, COVER, WATER TWICE DAILY OR APPLY NON-TOXIC SOIL BINDERS TO EXPOSED STOCKPILES (DIRT, SAND, ETC.)
13. <E> S.D. TO HAVE SACK FILTER.
14. FOR ADDITIONAL INFORMATION SEE CIVIL
15. CONTRACT TO MAINTAIN & WATER TREES & LANDSCAPE DURING TOTAL COURSE OF CONSTRUCTION FOR WHOLE LIBRARY SITE.

JOB COPY
These plans must be kept on the job at all times.
CITY OF MORGAN HILL
BUILDING DIVISION

WESTON MILES
ARCHITECTS
17500 Depot Street, Suite #200
Morgan Hill, CA 95037
1 •408 • 779 • 6686
• Architecture • Landscape •

LICENSED ARCHITECT
No. C 18,552
RENEWAL 02-31-20
STATE OF CALIFORNIA
NOT VALID WITHOUT SIGNATURE

REVISIONS
1 03/28/2019 PLAN REVIEW #2
2
3

EXISTING & DEMO SITE PLAN

MORGAN HILL LIBRARY ADDITION

CITY OF MORGAN HILL
660 W MAIN AVE, MORGAN HILL, CA 95037

These drawings are instruments of service and are the property of WESTON MILES ARCHITECTS, INC. All designs and plans shown on this drawing are prepared for use on the specified project and shall not be used for other purposes without the expressed written permission of WESTON MILES ARCHITECTS, INC.

Written dimensions on these drawings shall have precedence over scaled dimensions. Contractors shall verify and be responsible for all dimensions and conditions on the job and this office shall be notified of any variations from the dimensions and conditions shown by these drawings. Shop details shall be submitted to this office for approval before proceeding with fabrication.

© Copyrighted 2019

DATE: 02/8/2019

JOB NO: 15058

A1.1

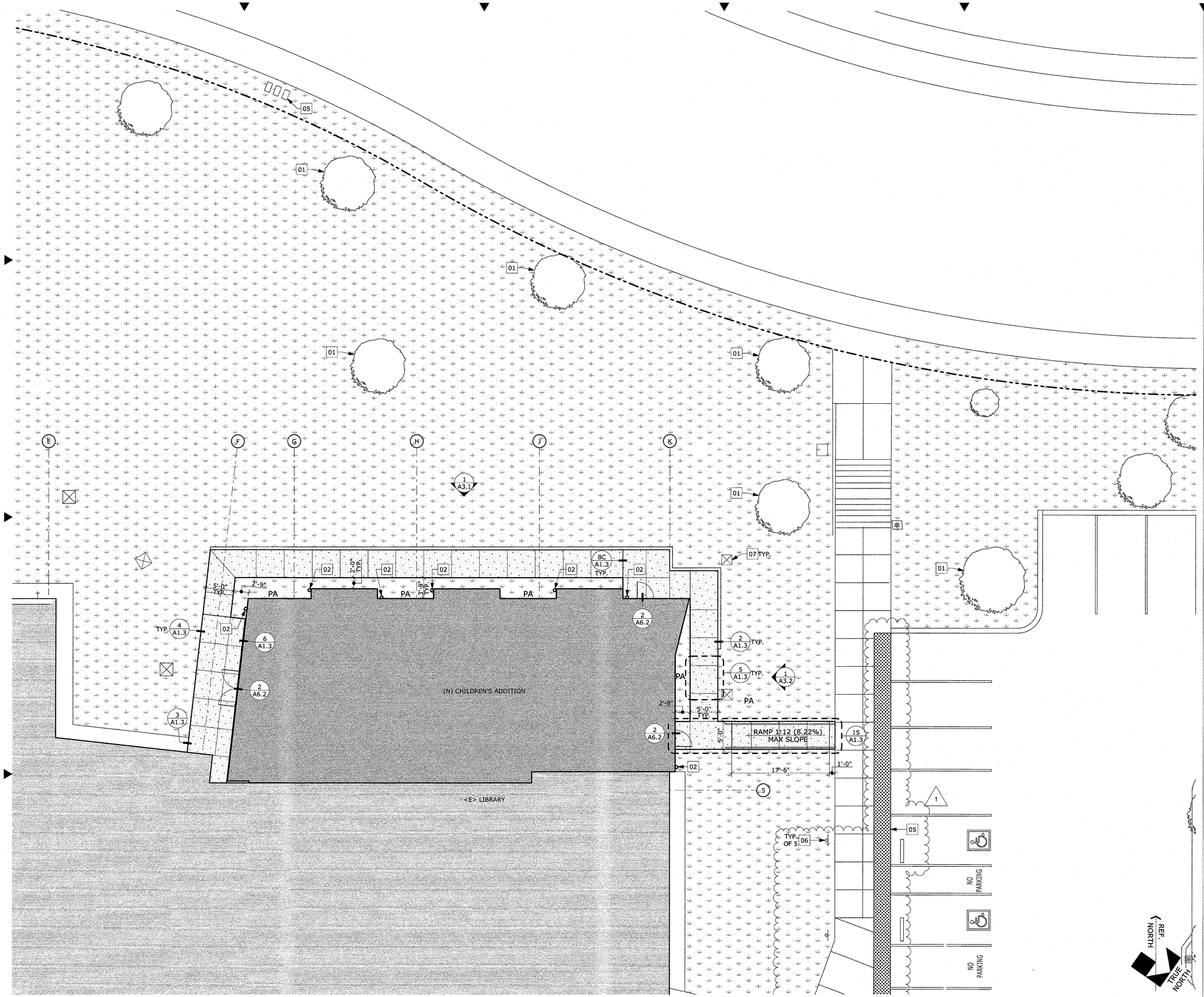

ENLARGED SITE PLANS
SCALE: 1/8" = 1'-0"
1

GENERAL NOTES

1. SEE CIVIL FOR LIMITS OF SITE WORK. NOTE NON-EXPANSIVE FILL TO EXTEND TO THE OUTER LIMITS OF THE SIDEWALKS AND LANDSCAPE WALL FOOTINGS.

KEY NOTES

##

01	<E> TREE TO REMAIN. PROTECT DURING DEMOLITION AND RECONSTRUCTION, SEE GENERAL NOTES #2, #5, #6 & #15 ON A1.1
02	RWL TO S.D. - SEE 7/A1.3
04	GUARDRAIL - SEE 16/A1.3
05	SURFACE APPLIED TACTILE WARNING AT <E> FLUSH CURB PER DETAIL 3/A1.4
06	<E> PARKING SIGN - VERIFY SIGN COMPLIES WITH DETAIL 9/A1.3 IF SIGN DOES NOT COMPLY REPLACE.
07	DROP INLET - SEE CIVIL DRAWINGS

1

JOB COPY
These plans must be kept on the job at all times.
CITY OF MORGAN HILL
BUILDING DIVISION

SYMBOL LEGEND

PROPERTY LINE

4" CEMENT CONCRETE PAVMENT, MATCH <E> FINISH W/ # 3 REBAR @ 18" O/C E/W OVER 4" CLASS 2 BASE ROCK O/ 14" NON-EXPANSIVE FILL O/ 95% COMPACTED BASE

PA= PLANTING AREA SEE LANDSCAPE PLANS

WESTON MILES
ARCHITECTS
17500 Depot Street, Suite #200
Morgan Hill, CA 95037
1 •408 • 779 • 6686
• Architecture • Landscape •

REGISTERED ARCHITECT
No. C 18,552
EXPIRAL 08-31-19
STATE OF CALIFORNIA
NOT VALID WITHOUT SIGNATURE

REVISIONS
1 03/28/2019 PLAN REVIEW #2
2
3

ENLARGED SITE PLAN

MORGAN HILL LIBRARY ADDITION

CITY OF MORGAN HILL
660 W MAIN AVE, MORGAN HILL, CA 95037

These drawings are instruments of service and are the property of WESTON MILES ARCHITECTS, INC. All designs and other information on the drawings are for use on the specified project and shall not be used otherwise without the expressed written permission of WESTON MILES ARCHITECTS, INC.

Written dimensions on these drawings shall have precedence over scaled dimensions. Contractors shall verify and be responsible for all dimensions and conditions on the job and this office shall be notified of any variations from the dimensions and conditions shown by these drawings. Shop details shall be submitted to this office for approval before proceeding with fabrication.

© Copyright(c) 2019

DATE: 02/8/2019

JOB NO: 15058

A1.2

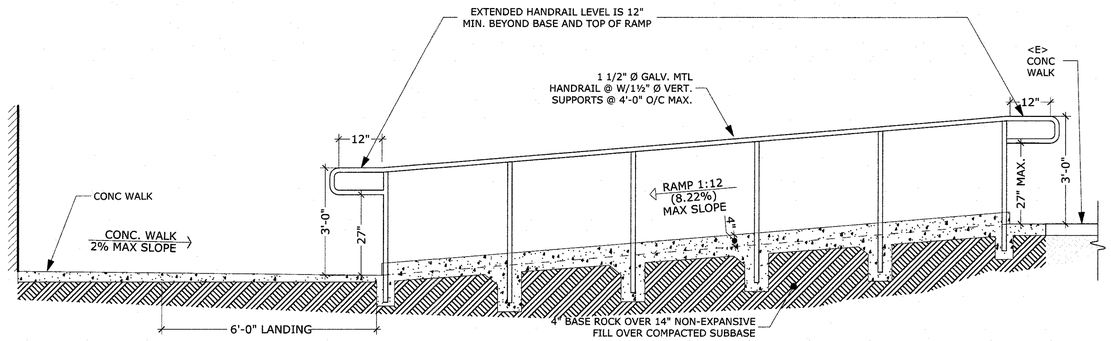

GUARDRAIL AT WALKWAY (16)
SCALE: 1/2" = 1'-0"

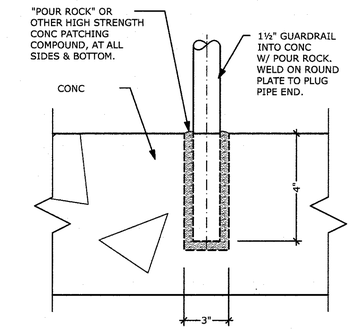

GUARDRAIL IN CONC (12)
SCALE: 3" = 1'-0"

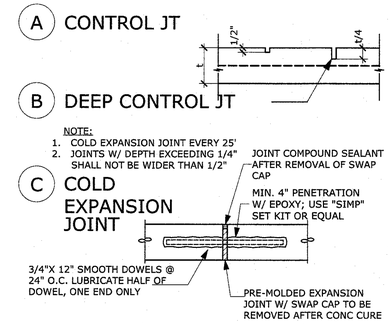

TYP. SLAB JOINT (8)
SCALE: 1 1/2"= 1'-0"

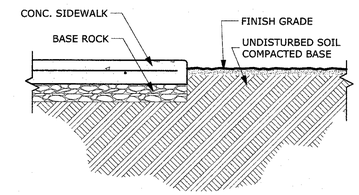

CONCRETE PATIO EDGE (4)
SCALE: 1" = 1'-0"

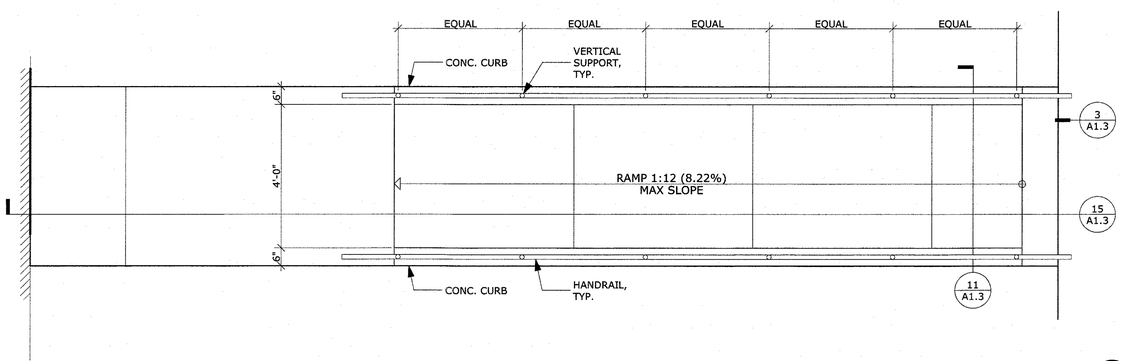

GUARDRAIL AT WALKWAY (15)
SCALE: 1/2" = 1'-0"

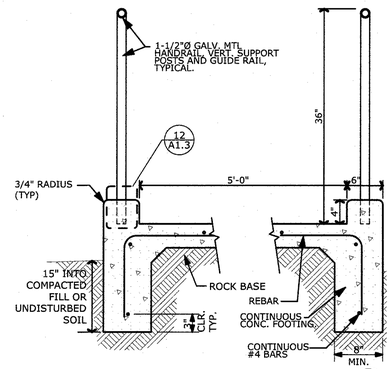

RAMP WITH CURB (11)
SCALE: 1" = 1'-0"

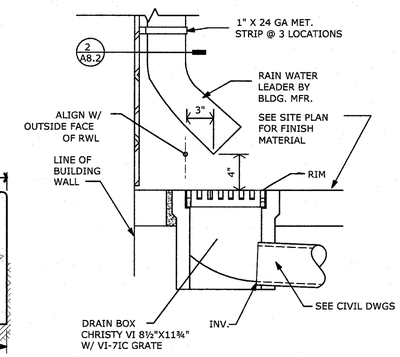

RAIN WATER LEADER (7)
SCALE: 1 1/2"= 1'-0"

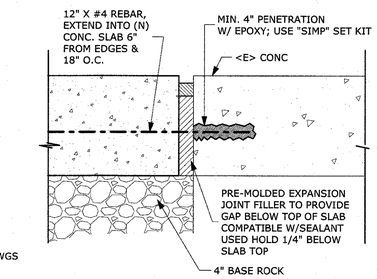

(N) CONCRETE TO <E> CONCRETE (3)
SCALE: 1 1/2"= 1'-0"

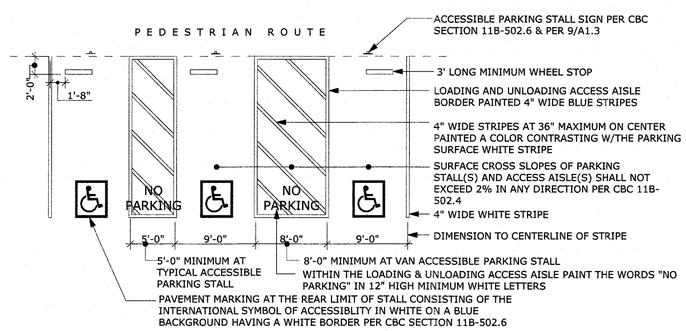

FOR REFERENCE ONLY
TYPICAL ADA PARKING DETAIL (18)
SCALE: 1/8" = 1'-0"

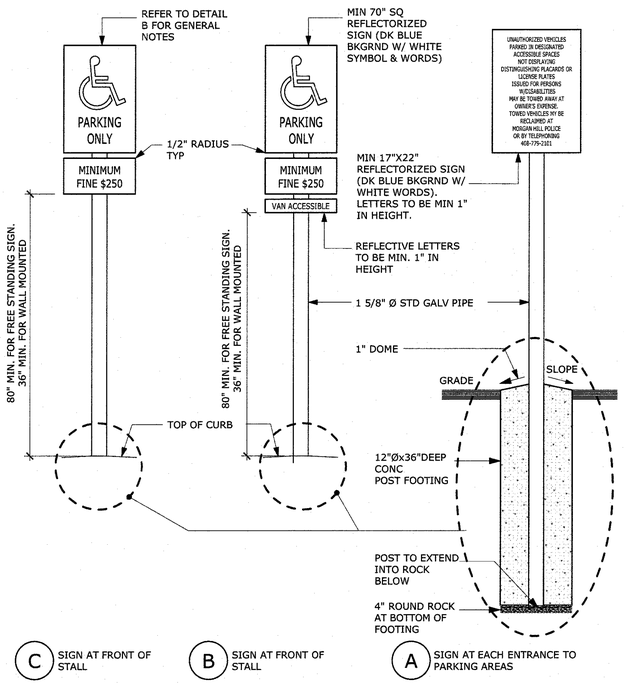

FOR REFERENCE ONLY
PARKING SIGN REQUIREMENTS (9)
SCALE: 1/4" = 1'-0"

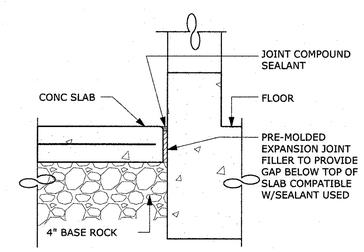

CONCRETE PAD @ BUILDING (6)
SCALE: 1 1/2"= 1'-0"

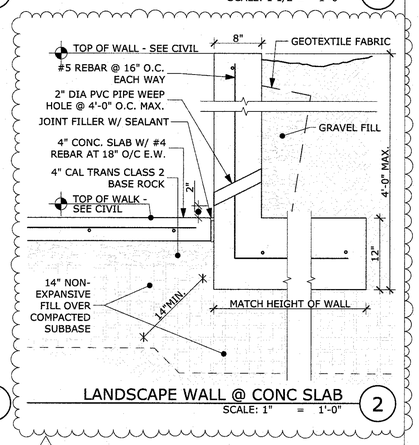

LANDSCAPE WALL @ CONC SLAB (2)
SCALE: 1" = 1'-0"

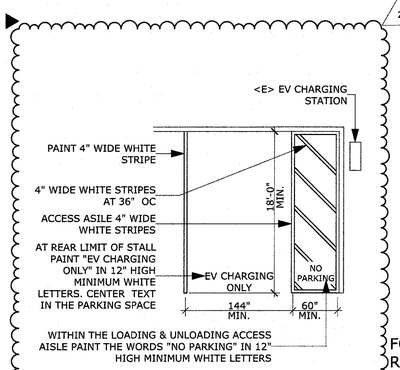

VAN EVCS PARKING (21)
SCALE: 1/8" = 1'-0"

FOR REFERENCE ONLY

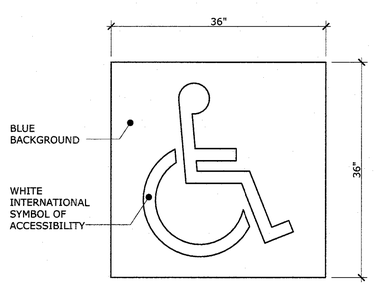

PAVEMENT MARKING AT THE REAR LIMIT OF STALL CONSISTING OF THE INTERNATIONAL SYMBOL OF ACCESSIBILITY IN WHITE ON A BLUE BACKGROUND HAVING A WHITE BORDER PER CBC SECTION 1129B.4

ISA PARKING GRAPHIC (17)
SCALE: 1" = 1'-0"

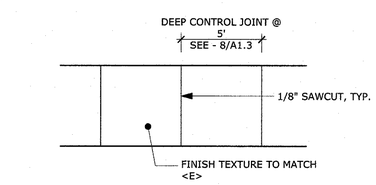

NOTES:
1. SEE PLAN FOR COLD EXPANSION JOINT LOCATIONS

TYP. SIDEWALK PATTERN (5)
SCALE: 3/8" = 1'-0"

JOB COPY
These plans must be kept on the job at all times.
CITY OF MORGAN HILL BUILDING DIVISION

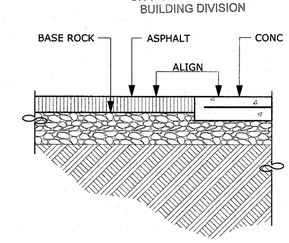

CONCRETE @ ASPHALT (1)
SCALE: 1" = 1'-0"

WESTON MILES
ARCHITECTS
17500 Depot Street, Suite #200
Morgan Hill, CA 95037
1 •408 • 779 • 6686
• Architecture • Landscape •

REGISTERED ARCHITECT No. C 18,552 EXPIRES 06-30-20 STATE OF CALIFORNIA
NOT VALID WITHOUT SIGNATURE

REVISIONS
1 03/28/2019 PLAN REVIEW #2
2 05/01/2019 PLAN REVIEW #3
3

BUILDING DEPT.
MAY 02 2019
CITY OF MORGAN HILL

SITE DETAILS

MORGAN HILL LIBRARY ADDITION

CITY OF MORGAN HILL
660 W MAIN AVE, MORGAN HILL, CA 95037

These drawings are instruments of service and are the property of WESTON MILES ARCHITECTS, INC. All designs and other information on the drawings are for use on the specified project and shall not be used otherwise without the expressed written permission of WESTON MILES ARCHITECTS, INC.

Written dimensions on these drawings shall have precedence over scaled dimensions. Contractors shall verify and be responsible for all dimensions and conditions on the job and this office shall be notified of any variations from the dimensions and conditions shown by these drawings. Shop details shall be submitted to this office for approval before proceeding with fabrication.

© Copyrighted 2019

DATE: 02/8/2019

JOB NO: 15058

A1.3

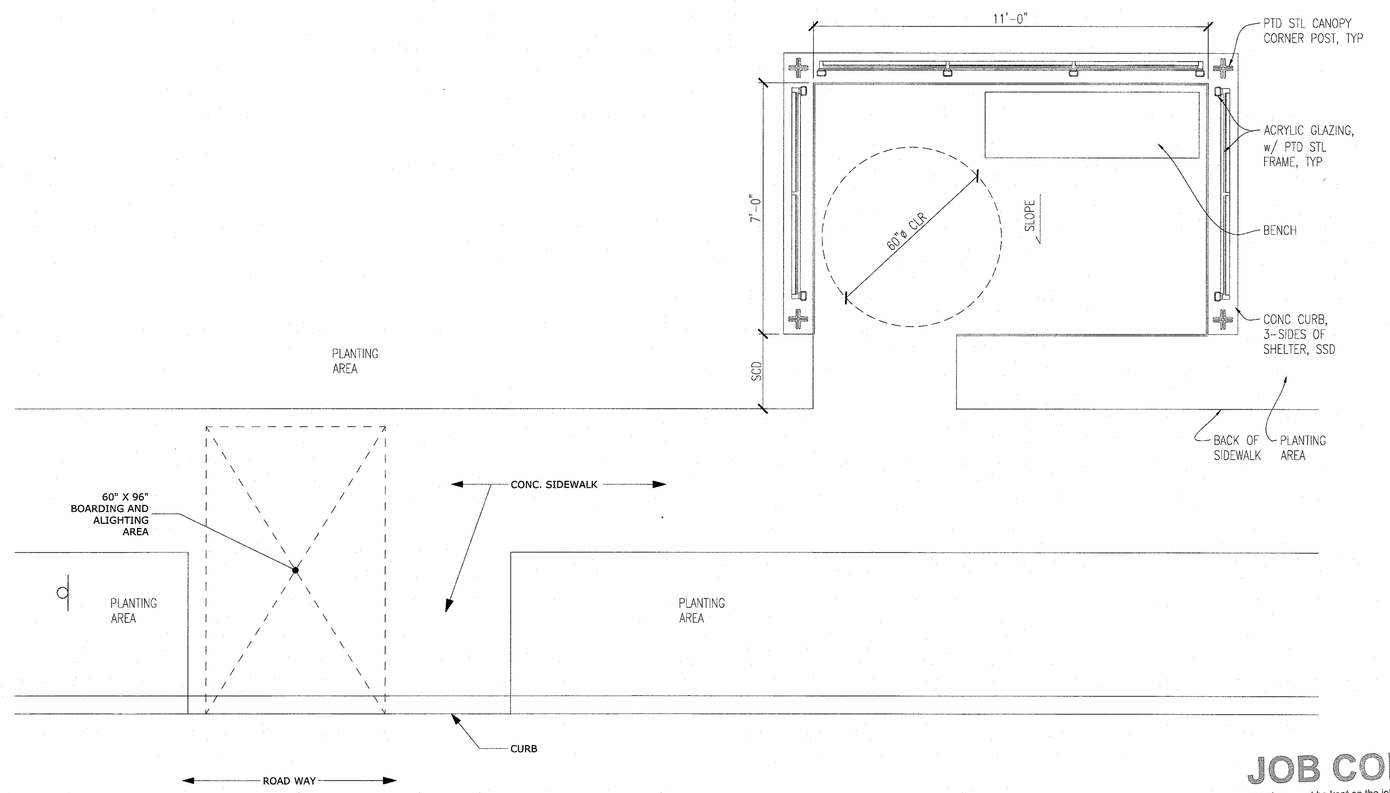

JOB COPY

These plans must be kept on the job at all times.

CITY OF MORGAN HILL
BUILDING DIVISION

FOR REFERENCE ONLY
BUS SHELTER
SCALE: 1/2" = 1'-0"
2

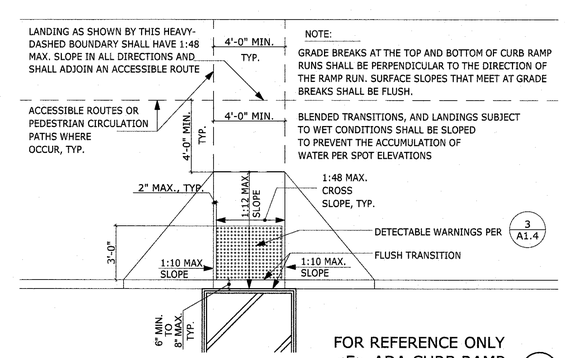

NOTE:

GRADE BREAKS AT THE TOP AND BOTTOM OF CURB RAMP RUNS SHALL BE PERPENDICULAR TO THE DIRECTION OF THE RAMP RUN. SURFACE SLOPES THAT MEET AT GRADE BREAKS SHALL BE FLUSH.

BLENDED TRANSITIONS, AND LANDINGS SUBJECT TO WET CONDITIONS SHALL BE SLOPED TO PREVENT THE ACCUMULATION OF WATER PER SPOT ELEVATIONS

FOR REFERENCE ONLY
<E> ADA CURB RAMP
SCALE: 1/4" = 1'-0"
20

NOTE: COLOR SHALL CONTRACT WITH ADJACENT WLAKING SURFACE PER 2016 CBC 11B-705.1.1.3

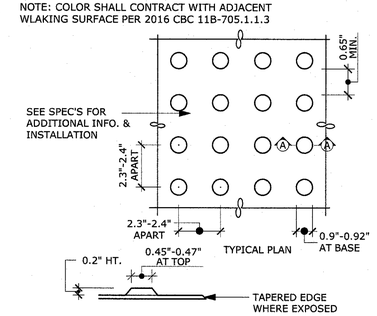

TACTILE WARNING SURFACE
SCALE: 3" = 1'-0"
3

WESTON MILES
ARCHITECTS
17500 Depot Street, Suite #200
Morgan Hill, CA 95037
1 •408 • 779 • 6686
• Architecture • Landscape •

LICENSED ARCHITECT No. C 18,552 RENEWAL 08-31-20 STATE OF CALIFORNIA

NOT VALID WITHOUT SIGNATURE

REVISIONS
1 03/28/2019 PLAN REVIEW #2
2
3

SITE DETAILS

MORGAN HILL LIBRARY ADDITION

CITY OF MORGAN HILL
660 W MAIN AVE, MORGAN HILL, CA 95037

These drawings are instruments of service and are the property of WESTON MILES ARCHITECTS, INC. All designs and information on the drawings are for use on the specified project and shall not be used otherwise without the expressed written permission of WESTON MILES ARCHITECTS, INC.

Written dimensions on these drawings shall have precedence over scaled dimensions. Contractors shall verify and be responsible for all dimensions. Contractors shall check the job and this office shall be notified of any variations from the dimensions and conditions shown by these drawings. Shop details shall be submitted to this office for approval before proceeding with fabrication.

© Copyrighted 2019

DATE: 02/8/2019

JOB NO: 15058

A1.4

1

SYMBOL LEGEND

- - - - - ITEMS TO BE DEMOLISHED

GENERAL NOTES

1. CONTRACTOR SHALL VERIFY LOCATION AND DEPTH OF ALL <E> UTILITIES PRIOR TO ANY EXCAVATION FOR DEMOLITION.
2. CONTRACTOR SHALL VERIFY LOCATION OF ALL <E> ABOVE GROUND UTILITIES AND PROVIDE FOR THEIR TEMPORARY DISCONNECTION, PROTECTION, REMOVAL AND/OR STORAGE AS MAY BE REQUIRED DURING CONSTRUCTION. CONTRACTOR SHALL COORDINATE WITH THE OWNER TO DETERMINE WHETHER TEMPORARY SERVICES ARE NECESSARY.
3. ALL SPOILS, DEBRIS, AND INCIDENTAL ITEMS REMOVED FROM THE DEMOLITION WORK SHALL BE HAULED OFF SITE BY CONTRACTOR AND BE DISPOSED OF IN A LAWFUL MANNER AS IT ACCUMULATES. EXCAVATED, CLEAN FILL MAY BE USED IN CONSTRUCTION IF APPROVED BY THE OWNER'S REPRESENTATIVE.
4. CONTRACTOR SHALL TAKE CARE NOT TO DAMAGE IN ANY WAY, ANY EXISTING ELEMENTS NOT DESIGNATED FOR REMOVAL. SUCH DAMAGE IS THE RESPONSIBILITY OF THE CONTRACTOR AT NO ADDITIONAL COST TO THE OWNER.
5. SHUT OFF ALL WATER, GAS, & ELECTRIC AT STREET PRIOR TO ANY DEMOLITION.
6. CONTRACTOR IS TO PROTECT AND KEEP <E> TREES, U.N.O.
6. CONTRACTOR IS TO PROTECT AND KEEP <E> TREES, U.N.O.
7. THE SITE MUST BE CLEANED AT THE END OF EACH BUSINESS DAY.
8. CONTRACTOR TO MAINTAIN A SAFE, SECURE SITE WHILE UNATTENDED OR PERFORMING ANY OPERATIONS OF THIS PROJECT. INCLUDING, BUT NOT LIMITED TO TEMPORARY SHORING TO PROJECT PERSONNEL, STRUCTURES, ONGOING ACTIVITIES AND/OR OPERATIONS AND UTILITIES REMAINING IN TACT.
9. THIS DRAWING IS TO OUR BEST KNOWLEDGE, AND REFLECTS THE <E> SITE CONDITIONS,
10. FOR SITE DEMOLITION, SEE A1.1.
11. CONTRACTOR TO REFER TO SCA HAZARDOUS MATERIAL SURVEY
12. THROUGHOUT CONSTRUCTION THE CONTRACTOR SHALL MAINTAIN AND MAKE AVAILABLE A LIST OF ITEMS FOR RELOCATION NOTING WHERE EACH ITEM IS REINSTALLED. BY THE END OF CONSTRUCTION, THE CONTRACTOR SHALL REVIEW THE LIST WITH THE ARCHITECT AND EITHER STORE OR DISPOSE OF EACH ITEM REMAINING UNINSTALLED AS DIRECTED.
12. THROUGHOUT CONSTRUCTION THE CONTRACTOR SHALL MAINTAIN AND MAKE AVAILABLE A LIST OF ITEMS FOR RELOCATION NOTING WHERE EACH ITEM IS REINSTALLED. BY THE END OF CONSTRUCTION, THE CONTRACTOR SHALL REVIEW THE LIST WITH THE ARCHITECT AND EITHER STORE OR DISPOSE OF EACH ITEM REMAINING UNINSTALLED AS DIRECTED.
13. SEE INTERIOR AND EXTERIOR ELEVATIONS FOR ADDITIONAL DEMO INFORMATION.
14. CONTRACTOR TO REQUEST INFORMATION TO ARCHITECT IF PLAN DEVIATES FROM AS-BUILT CONDITIONS FOR CLARIFICATION OF PLAN.
15. CONTRACTOR TO REMOVE DRYWALL AS REQUIRED TO INSTALL NEW ELECTRICAL WORK.
16. WHERE <E> CARPET IS REMOVED THE <E> BASE SHALL REMAIN. CARE IS TO BE TAKEN TO NOT DAMAGE <E> BASE. DAMAGED BASE SHALL BE REPLACED AT NO ADDITIONAL COST.

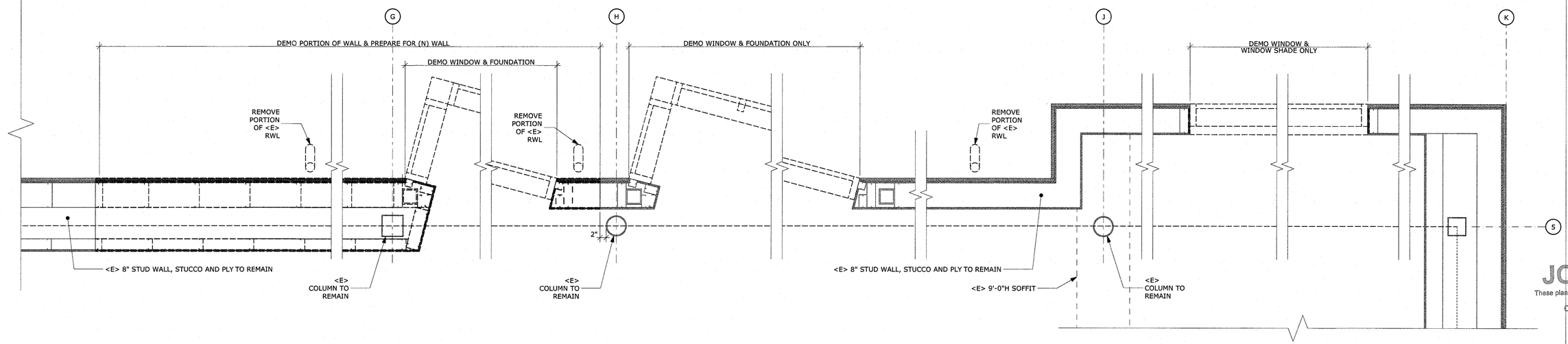

DEMO PLAN

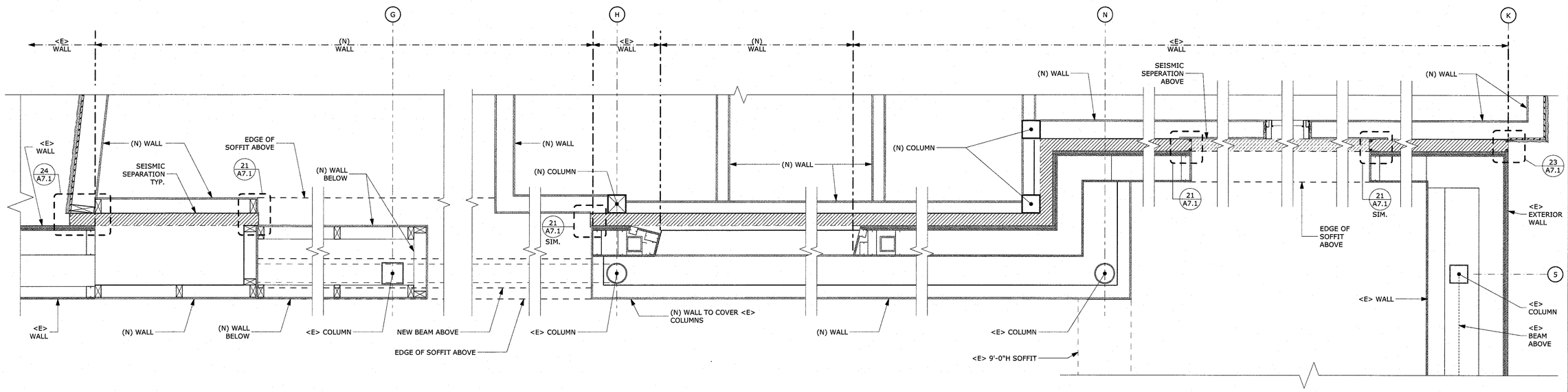

NEW PLAN

DEMO AND NEW WALL FRAMING PLAN (1)
SCALE: 3/4" = 1'-0"

WESTON MILES
ARCHITECTS
17500 Depot Street, Suite #200
Morgan Hill, CA 95037
1 •408 • 779 • 6686
• Architecture • Landscape •

NOT VALID WITHOUT SIGNATURE

REVISIONS
1 03/28/2019 PLAN REVIEW #2
2
3

JOB COPY
These plans must be kept on the job at all times.
CITY OF MORGAN HILL
BUILDING DIVISION

EXISTING/DEMO WALL PLAN

MORGAN HILL LIBRARY ADDITION

CITY OF MORGAN HILL
660 W MAIN AVE, MORGAN HILL, CA 95037

These drawings are instruments of service and are the property of WESTON MILES ARCHITECTS, INC. All designs and other information on the drawings are for use on the specified project and shall not be used otherwise without the express written permission of WESTON MILES ARCHITECTS, INC.

Written dimensions on these drawings shall have precedence over scaled dimensions. Contractors shall verify and be responsible for all dimensions and conditions on the job and the office shall be notified of any variations from the dimensions and conditions shown on these drawings. Shop details shall be submitted to the office for approval before proceeding with fabrication.

© Copyrighted 2019

DATE: 02/8/2019

JOB NO: 15058

A2.0

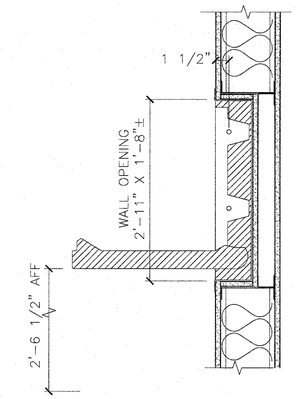

BABY CHANGING STATION (3)
SCALE: 1 1/2"= 1'-0"

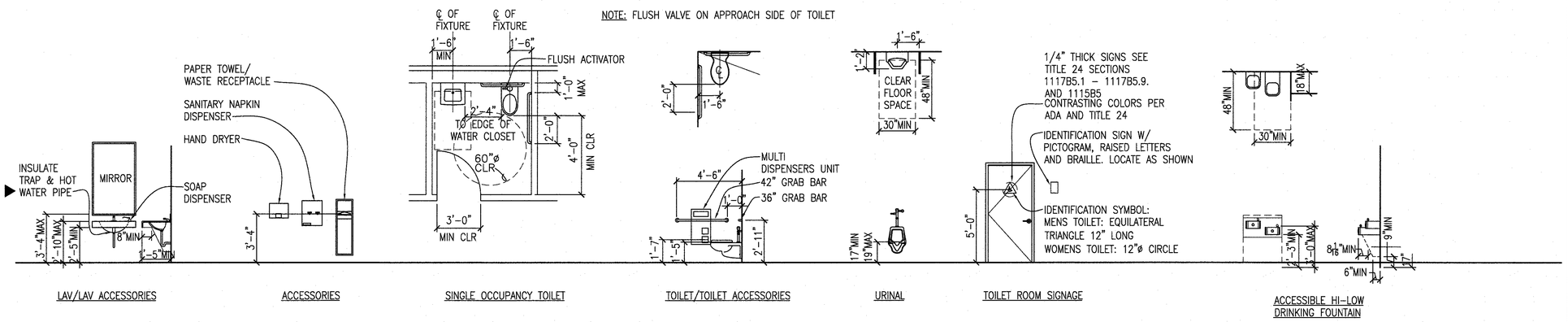

EXISTING & DEMO FLOOR PLAN (4)
SCALE: 1/4" = 1'-0"

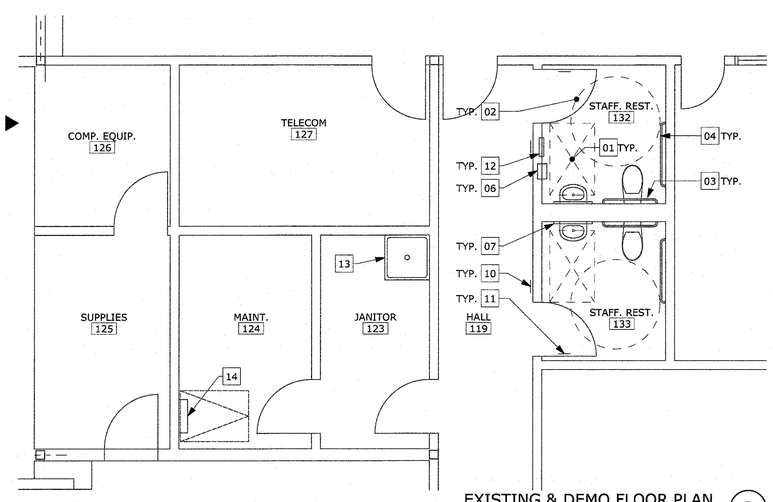

EXISTING & DEMO FLOOR PLAN (2)
SCALE: 1/4" = 1'-0"

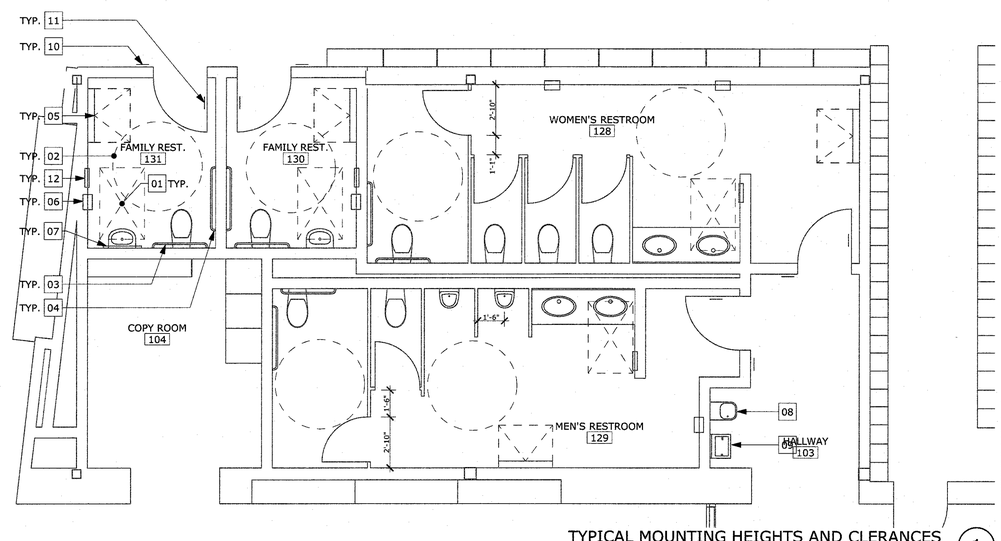

TYPICAL MOUNTING HEIGHTS AND CLERANCES (1)
SCALE: 1/4" = 1'-0"

GENERAL NOTES

1. SEE 4/A2.01 FOR TYPICAL MOUNTING HEIGHTS AND CLEARANCES

KEY NOTES

##

01	30" x 48" CLEAR FLOOR SPACE
02	5'-0" DIA. CLEAR TURNING RADIUS
03	36" GRAB BAR
04	42" GAB BAR
05	RECESSED BABY CHANGING STATION
06	RECESSED HAND DRYER
07	MIRROR ON WALL
08	DRINKING FOUNTAIN
09	DRINKING FOUNTAIN WITH BOTTLE FILLER
10	WALL MOUNTED ROOM IDENTIFICATION SIGN
11	DOOR MOUNTED IDENTIFICATION SYMBOL
12	RECESSED PAPER TOWEL DISENSER/WASTE RECEPTACLE
13	MOP SINK
14	ACCESS LADDER AND ROOF HATCH ABOVE

JOB COPY
These plans must be kept on the job at all times.
CITY OF MORGAN HILL
BUILDING DIVISION

WESTON MILES
ARCHITECTS
17500 Depot Street, Suite #200
Morgan Hill, CA 95037
1 •408 • 779 • 6686
• Architecture • Landscape •

NOT VALID WITHOUT SIGNATURE

REVISIONS
1 03/28/2019 PLAN REVIEW #2
2
3

EXISTING RESTROOMS - FOR REFERENCE ONLY

MORGAN HILL LIBRARY ADDITION

CITY OF MORGAN HILL
660 W MAIN AVE, MORGAN HILL, CA 95037

These drawings are instruments of service and are the property of WESTON MILES ARCHITECTS, INC. All designs and plans shown on these drawings are intended for use on the specified project and shall not be used otherwise without the expressed written permission of WESTON MILES ARCHITECTS, INC.

Written dimensions on these drawings shall have precedence over scaled dimensions. Contractors shall verify and be responsible for all dimensions and conditions on the job and this office shall be notified of any variations from the dimensions and conditions shown by these drawings. Shop details shall be submitted to this office for approval before proceeding with fabrication.

© Copyrighted 2019

DATE: 02/8/2019

JOB NO: 15058

A2.01
1

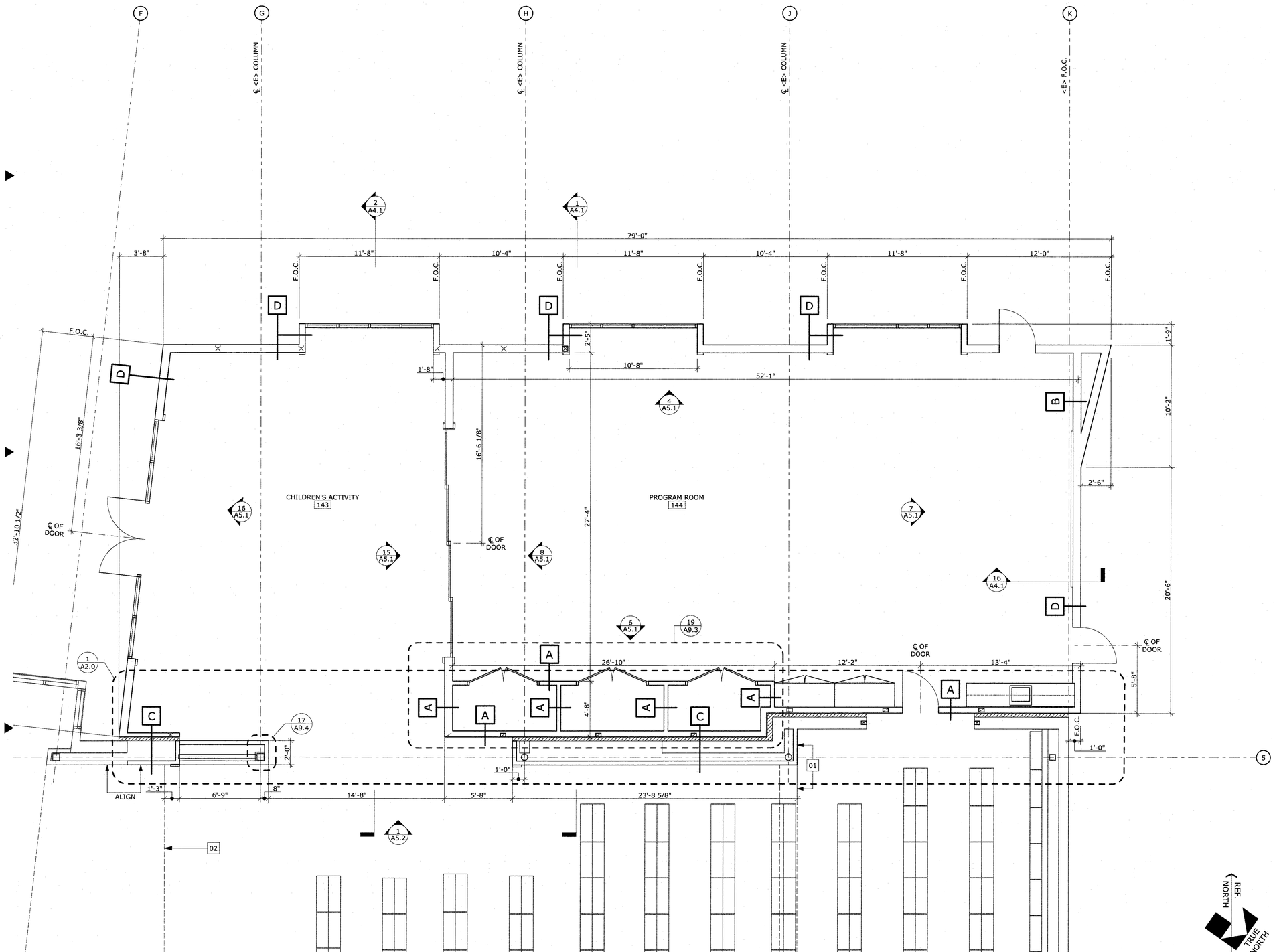

FLOOR PLAN
SCALE: 1/4" = 1'-0"
1

GENERAL NOTES

FOC = FACE OF CONCRETE
FOCOL = FACE OF COLUMN

KEY NOTES

##

01 ALIGN WALL WITH EXISTING SOFFIT ABOVE

02 <E> SOFFIT ABOVE

SYMBOL LEGEND

A WALL TYPE - SEE A7.1

JOB COPY
These plans must be kept on the job at all times.
CITY OF MORGAN HILL
BUILDING DIVISION

WESTON MILES
ARCHITECTS
17500 Depot Street, Suite #200
Morgan Hill, CA 95037
1 •408 • 779 • 6686
• Architecture • Landscape •

LICENSED ARCHITECT
No. C 18,552
EXPIRES 12-31-20
STATE OF CALIFORNIA
NOT VALID WITHOUT SIGNATURE

REVISIONS
1 03/28/2019 PLAN REVIEW #2
2
3

FLOOR PLAN

MORGAN HILL LIBRARY ADDITION

CITY OF MORGAN HILL
660 W MAIN AVE, MORGAN HILL, CA 95037

These drawings are instruments of service and are the property of WESTON MILES ARCHITECTS, INC. All designs and other information on the drawings are for use on the specified project and shall not be used otherwise without the expressed written permission of WESTON MILES ARCHITECTS, INC.

Written dimensions on these drawings shall have precedence over scale dimensions. Contractors shall verify and be responsible for all dimensions and conditions on the job and this office shall be notified of any variations from the dimensions and conditions shown by these drawings. Shop details shall be submitted to this office for approval before proceeding with fabrication.

© Copyrighted 2019

DATE: 02/8/2019

JOB NO: 15058

A2.1

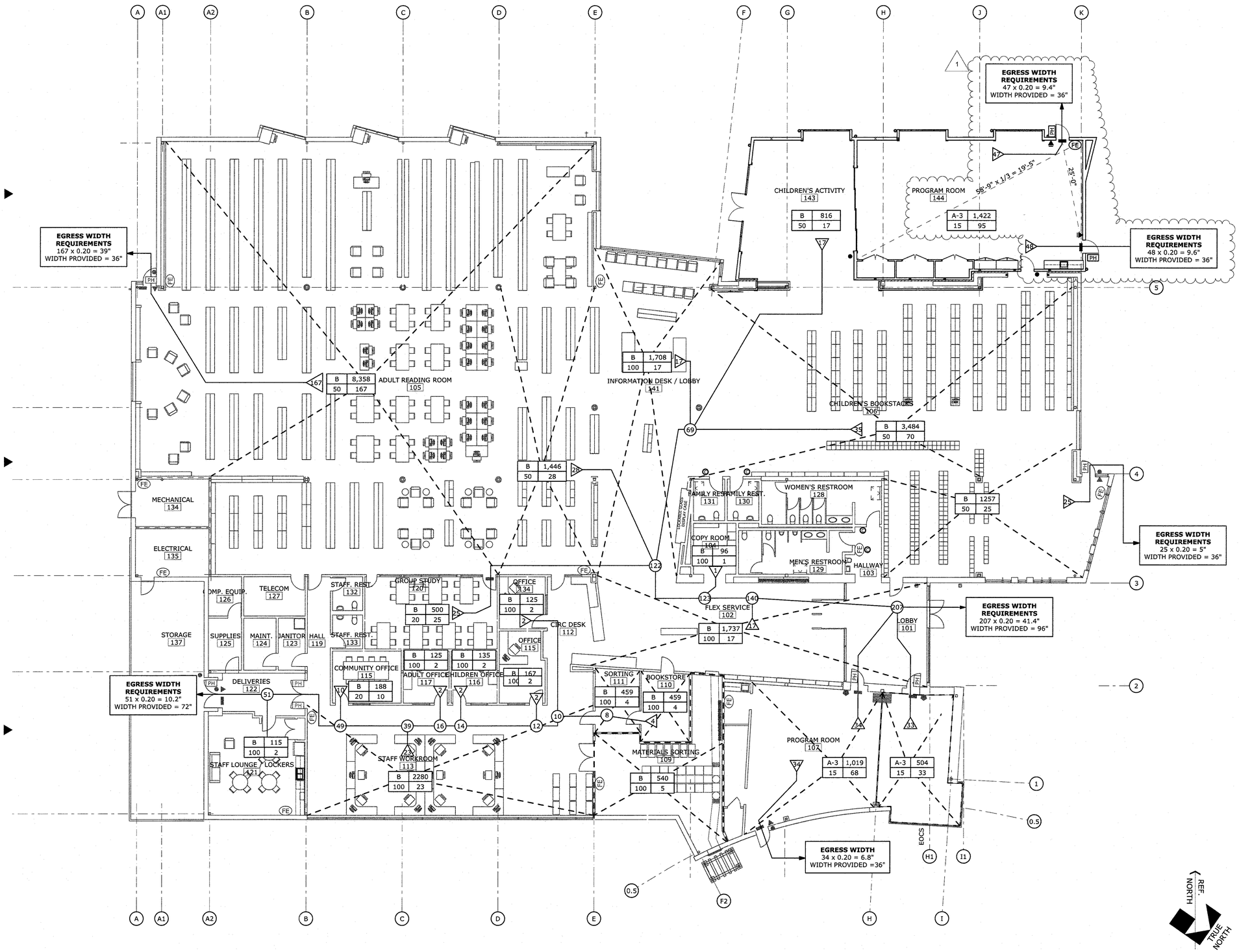

EGRESS PLAN
SCALE: 3/32" = 1'-0"

GENERAL NOTES

1. NONE

KEY NOTES

	##
01	NONE

SIGNAGE LEGEND

- DOOR SIGNAGE - SEE DETAILS 2/A9.4 &3A/A9.4
- ILLUMINATED EXIT SIGN WITH DIRECTIONAL ARROW WHEN NECESSARY -SEE ELECTRICAL DRAWINGS
- EMERGENCY EXIT ONLY SIGN - SEE DETAILS 2/A9.4 &3B/A9.4
- <E> TOILET DOOR SIGNAGE
- <E> TOILET WALL SIGNAGE
- <E> EXIT SIGN
- <E> EXIT ROUTE SIGN
- <E> "NOT AN EXIT" SIGN
- BABY DIAPER CHANGING STATION SIGN

JOB COPY
These plans must be kept on the job at all times.
CITY OF MORGAN HILL
BUILDING DIVISION

SYMBOL LEGEND

- <E> 1-HR RATED WALL SYMBOL
- FE <E> FIRE EXTINGUISHER
- FE FIRE EXTINGUISHER - FOR FIRE EXTINGUISHER CABINET SEE DETAIL 2/A9.3 AND SPEC
- ALL PORTIONS OF THE BUILDING SHALL BE WITHIN 75 FEET OF A FIRE EXTINGUISHER. THE MINIMUM SIZE OF THE EXTINGUISHER SHALL BE 2-A:10-BC. SEE DETAIL 2/A9.3.
- ## ROOM OCCUPANCY LOAD
- ## COMBINED OCCUPANCY LOAD FROM ADJOINING ROOMS
- PH DOORS W/PANIC HARDWARE - SEE DOOR SCHEDULE FOR <E> OR (N) HARDWARE LOCATIONS

OCCUPANCY TYPE
ROOM SQUARE FEET
OCCUPANCY LOAD
OCCUPANCY FACTOR

WESTON MILES
ARCHITECTS
17500 Depot Street, Suite #200
Morgan Hill, CA 95037
1 •408 • 779 • 6686
• Architecture • Landscape •

LICENSED ARCHITECT
No. C 18,552
EXPIRES 06-30-20
STATE OF CALIFORNIA
NOT VALID WITHOUT SIGNATURE

REVISIONS
1 03/28/2019 PLAN REVIEW #2
2
3

EGRESS PLAN

MORGAN HILL LIBRARY ADDITION

CITY OF MORGAN HILL
660 W MAIN AVE, MORGAN HILL, CA 95037

These drawings are instruments of service and are the property of WESTON MILES ARCHITECTS, INC. All designs and other information on the drawings are for use on the specified project and shall not be used otherwise without the written permission of WESTON MILES ARCHITECTS, INC.

Written dimensions on these drawings shall have precedence over scaled dimensions. Contractors shall verify and be responsible for all dimensions and conditions on the job and this office shall be notified of any variations from the dimensions and conditions shown by these drawings. Shop details shall be submitted to this office for approval before proceeding with fabrication.

© Copyrighted 2019

DATE: 02/8/2019

JOB NO: 15058

A2.2

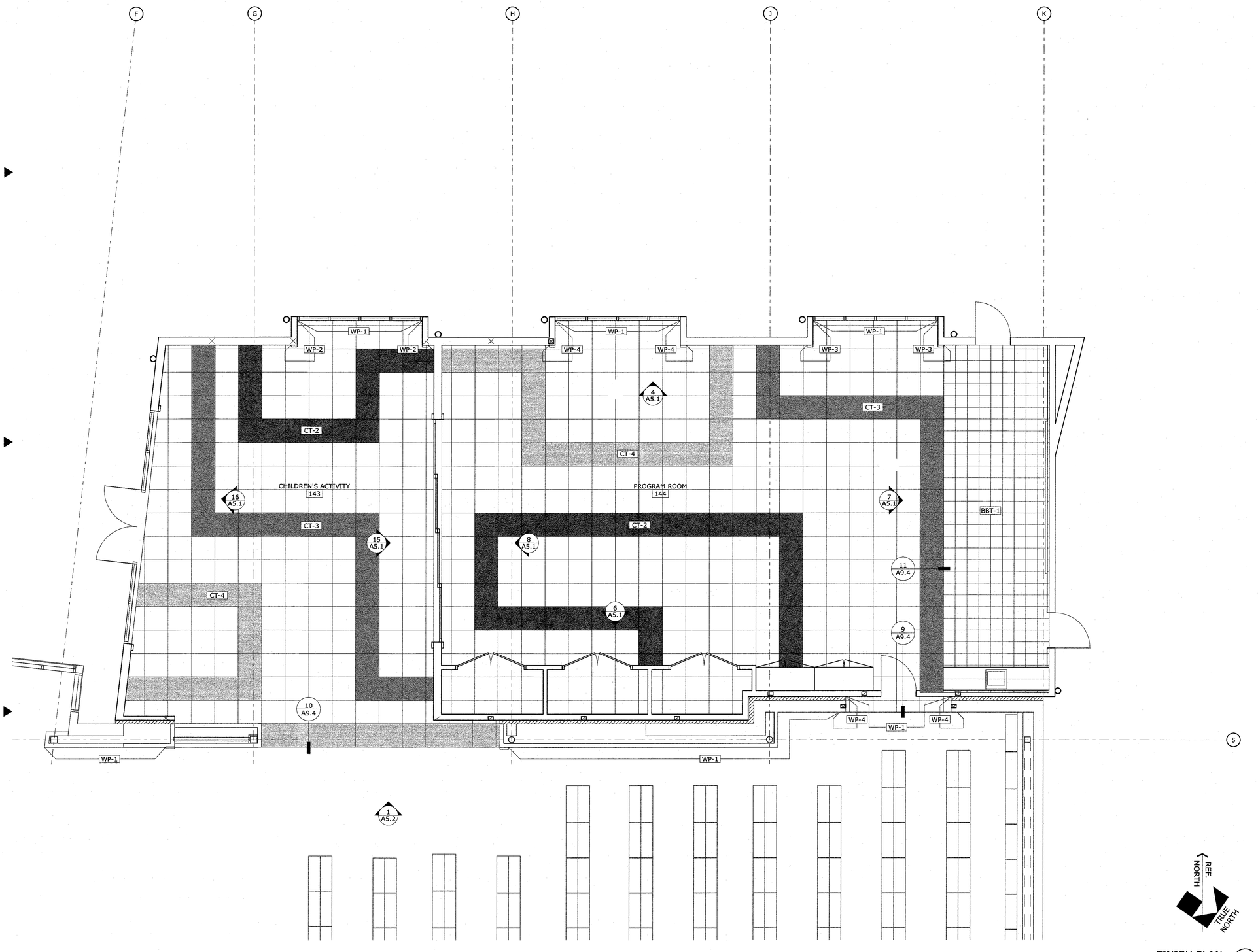

FINISH PLAN
SCALE: 1/4" = 1'-0"
1

GENERAL NOTES

1. SEE INTERIOR ELEVATIONS ON A5.1 & A5.2 FOR MORE INFORMATION ABOUT FINISHES
2. ALL INTERIOR PAINTING TO BE BY SCCLD

KEY NOTES

##

01 NONE

ROOM FINISHES SCHEDULE

FLOOR

CARPET TILE

CT-1	FIELD COLOR - SEE SPEC SECTION 096800 - CARPET TILE
CT-2	ORANGE - SEE SPEC SECTION 096800 - CARPET TILE
CT-3	BLUE - SEE SPEC SECTION 096800 - CARPET TILE
CT-4	GREEN - SEE SPEC SECTION 096800 - CARPET TILE

RESILIENT TILE

BBT-1	SEE SPEC SECTION 096500 - RESILIENT FLOORING

BASE

WOOD BASE

WB	SEE SPEC SECTION 062000 - FINISH CARPENTRY

WALLS

PAINT - SEE INTERIOR ELEVATIONS - FOR REFERENCE ONLY, ALL INTERIOR PAINT BY SCCLD

WP-1	FIELD COLOR - SEE SPEC SECTION 099100 - PAINTING
WP-2	ORANGE - SEE SPEC SECTION 099100 - PAINTING
WP-3	BLUE - SEE SPEC SECTION 099100 - PAINTING
WP-4	GREEN - SEE SPEC SECTION 099100 - PAINTING
WP-5	WRITABLE - SEE SPEC SECTION 099100 - PAINTING

TACKABLE WALL PANEL

WT-1	FIELD COLOR - SEE SPEC SECTION 098400 - ACOUSTIC WALL PANEL
WT-2	ORANGE - SEE SPEC SECTION 098400 - ACOUSTIC WALL PANEL
WT-3	BLUE - SEE SPEC SECTION 098400 - ACOUSTIC WALL PANEL
WT-4	GREEN - SEE SPEC SECTION 098400 - ACOUSTIC WALL PANEL

WALL COVERING - SEE INTERIOR ELEVATIONS

WC-1	SEE SPEC SECTION 097700 - SPECIAL WALL SURFACING

CEILING

PAINT - SEE REFLECTED CEILING PLAN - FOR REFERENCE ONLY, ALL INTERIOR PAINT BY SCCLD

CP-1	TBD - SEE SPEC SECTION 099100 - PAINTING

JOB COPY
These plans must be kept on the job at all times.
CITY OF MORGAN HILL
BUILDING DIVISION

FLOORING SYMBOL

CT-1
BBT
CT-1
CT-1
CT-1

SYMBOL LEGEND

- - - - 1-HR RATED WALL SYMBOL

FLOOR FINISH
BASE FINISH
WALL FINISH
CEILING FINISH

WESTON MILES
ARCHITECTS
17500 Depot Street, Suite #200
Morgan Hill, CA 95037
1 • 408 • 779 • 6686
• Architecture • Landscape •

LICENSED ARCHITECT
No. C 18,552
RENEWAL 12-31-19
STATE OF CALIFORNIA
NOT VALID WITHOUT SIGNATURE

REVISIONS
1 03/28/2019 PLAN REVIEW #2
2
3

FINISH PLAN

MORGAN HILL LIBRARY ADDITION

CITY OF MORGAN HILL
660 W MAIN AVE, MORGAN HILL, CA 95037

These drawings are instruments of service and are the property of WESTON MILES ARCHITECTS, INC. All designs and other information on the drawings are for use on the specified project and shall not be used otherwise without the expressed written permission of WESTON MILES ARCHITECTS, INC.

Written dimensions on these drawings shall have precedence over scaled dimensions. Contractors shall verify and be responsible for all dimensions and conditions on the job and this office shall be notified of any variations from the dimensions and conditions shown by these drawings. Shop drawings must be submitted to this office for approval before proceeding with fabrication.

© Copyrighted 2019

DATE: 02/8/2019

JOB NO: 15058

A2.3

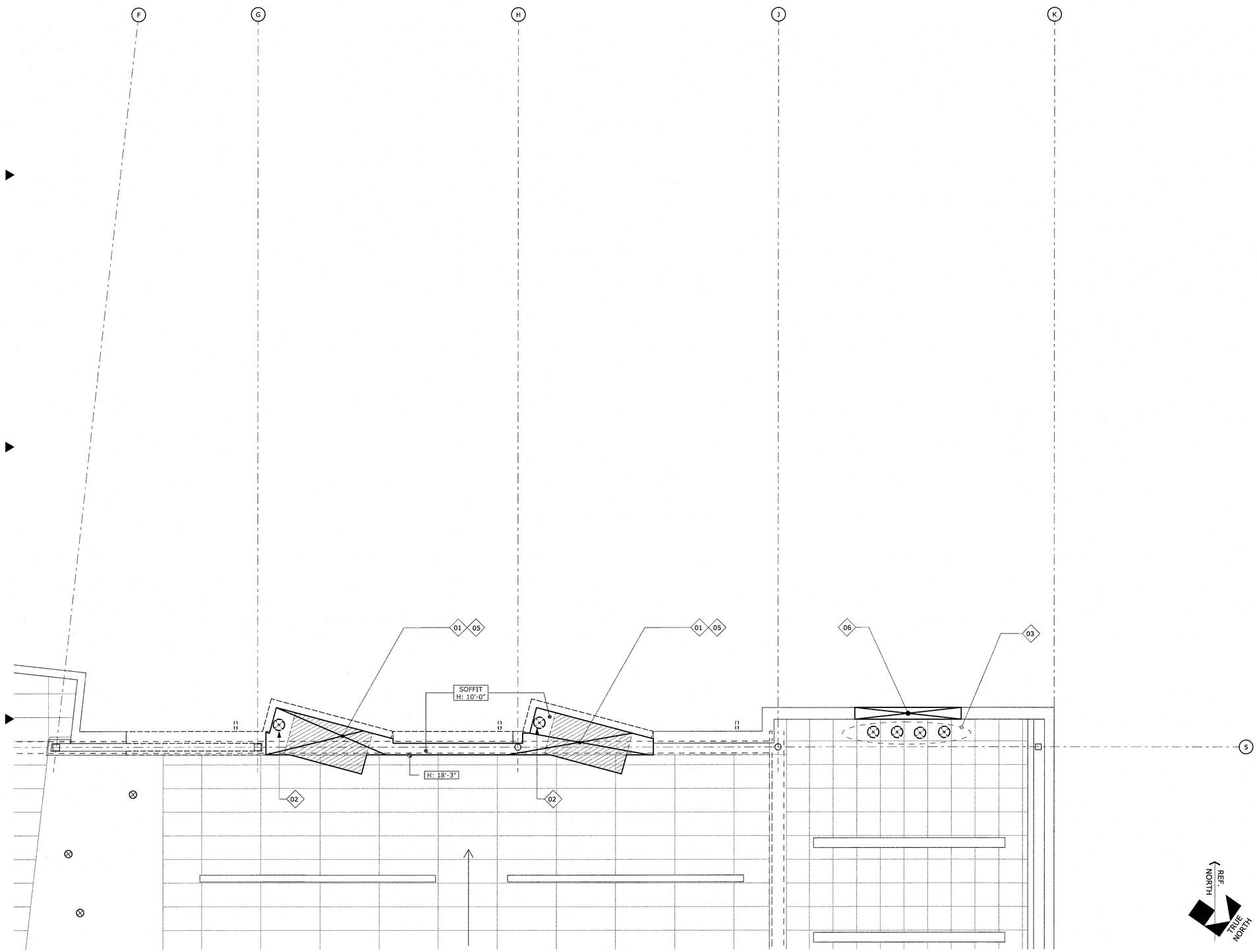

EXISTING & DEMO REFLECTED CEILING PLAN 1
SCALE: 1/4" = 1'-0"

GENERAL NOTES

DEMOLITION KEY NOTES

01 REMOVE AND DISCARD ALL CEILING, LIGHTING, AND SOFFITS IN THIS AREA, U.N.O.

02 REMOVE AND DISCARD LIGHT FIXTURE

03 REMOVE AND SAVE LIGHT FIXTURE FOR REINSTALLATION

04 REMOVE AND SAVE HVAC REGISTER FOR REINSTALLATION

05 REMOVE AND DISCARD SUSPENED PANEL AND MOUNTING ACCESSORIES

06 REMOVE GYPSUM BOARD & WINDOW SHADE AT EXISITNG WINDOW OPENING AND PREPARE FOR NEW

SYMBOL LEGEND

H: #'-#" CEILING HEIGHT

H: #'-#" SLOPED CEILING HEIGHT AT LOW/HIGH POINT

<E> GYP. BD. CEILING

<E> T-BAR CEILING

<E> 3 FORM SUSPENDED PANELS

JOB COPY
These plans must be kept on the job at all times.
CITY OF MORGAN HILL
BUILDING DIVISION

WESTON MILES
ARCHITECTS
17500 Depot Street, Suite #200
Morgan Hill, CA 95037
1 •408 • 779 • 6686
• Architecture • Landscape •

LICENSED ARCHITECT
No. C 18,552
STATE OF CALIFORNIA
NOT VALID WITHOUT SIGNATURE

REVISIONS
1 03/28/2019 PLAN REVIEW #2
2
3

EXISTING & DEMO REFLECTED CEILING PLAN

MORGAN HILL LIBRARY ADDITION

CITY OF MORGAN HILL
660 W MAIN AVE, MORGAN HILL, CA 95037

These drawings are instruments of service and are the property of WESTON MILES ARCHITECTS, INC. All designs, details and specifications are for use only on the specified project and shall not be used otherwise without the expressed written permission of WESTON MILES ARCHITECTS, INC.

Written dimensions on these drawings shall have precedence over scaled dimensions. Contractors shall verify and be responsible for all dimensions and conditions on the job and this office shall be notified of any variations from the dimensions and conditions shown by these drawings. Shop details shall be submitted to this office for approval before proceeding with fabrication.

© Copyrighted 2019

DATE: 02/8/2019

JOB NO: 15058

A2.4

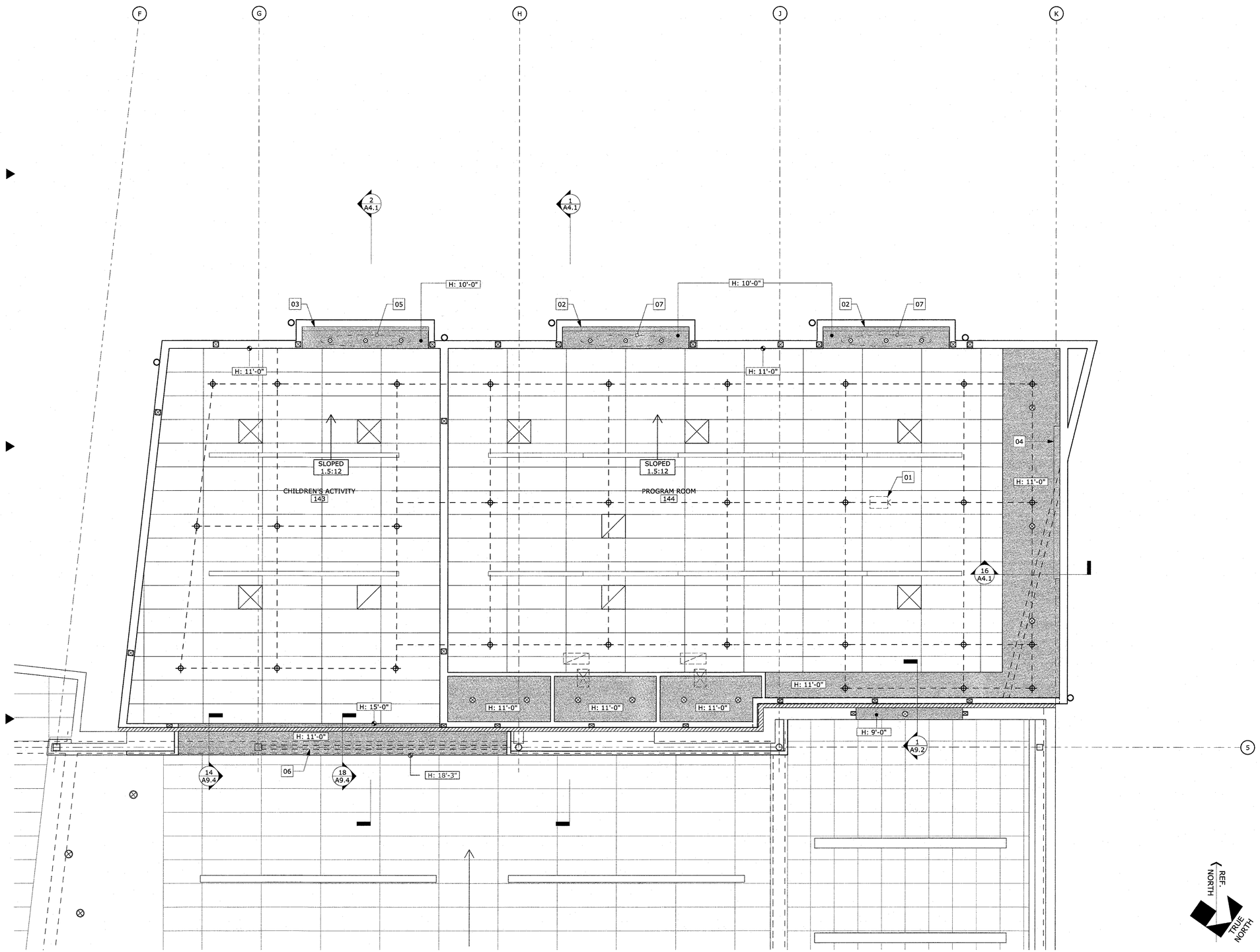

REFLECTED CEILING PLAN
SCALE: 1/4" = 1'-0"
1

GENERAL NOTES

1. REAPAIR OR REPLACE ALL <E> T-BAR GRID AND <E> ACOUSTIC TILES THAT WERE REQUIRED TO BE REMOVED TO INSTALL NEW WALLS, TYP.
2. SOFFITS TO BE PAINTED GYP. BD. FINISH

KEY NOTES

##

01	PROJECTOR
02	ARMSTRONG AXIOM PERIMETER SHADE POCKET & WINDOW SHADE TYPE A, SEE SPECS
03	ARMSTRONG AXIOM PERIMETER SHADE POCKET & WINDOW SHADE TYPE B, SEE SPECS
04	MOTORIZED PROJECTION SCREEN
05	RELOCATED <E> PENDANT LIGHT FIXTURE
06	NEW BEAM, SSD
07	NEW PENDANT LIGHT FIXTURE

SYMBOL LEGEND

XX-#	SEE FINISH SCHEDULE
H: #'-#"	CEILING HEIGHT
H: #'-#"	SLOPED CEILING HEIGHT AT LOW/HIGH POINT
	<E> GYP. BD. CEILING
	(N) GYP. BD. CEILING
	(N) T-BAR CEILING, FOR T-BAR ATTACHMENT SEE DETAILS ON A9.1
	<E> T-BAR CEILING
	<E> T-BAR CEILING
	AIR DIFFUSER - SMD
	AIR RETURN - SMD
	RECESSED DOWNLIGHT
	PENDANT LIGHT FIXTURE
	FIRE SPRINKLER - CONCEPTUAL PLACEMENT

JOB COPY
These plans must be kept on the job at all times.
CITY OF MORGAN HILL
BUILDING DIVISION

WESTON MILES
ARCHITECTS
17500 Depot Street, Suite #200
Morgan Hill, CA 95037
1 •408 • 779 • 6686
• Architecture • Landscape •

REGISTERED ARCHITECT
No. C 18,552
EXPIRAL 08-31-20
STATE OF CALIFORNIA
NOT VALID WITHOUT SIGNATURE

REVISIONS
1 03/28/2019 PLAN REVIEW #2
2
3

REFLECTED CEILING PLAN

MORGAN HILL LIBRARY ADDITION

CITY OF MORGAN HILL
660 W MAIN AVE, MORGAN HILL, CA 95037

These drawings are instruments of service and are the property of WESTON MILES ARCHITECTS, INC. The designs and other information on the drawings are for use on the specified project and shall not be used otherwise without the expressed written permission of WESTON MILES ARCHITECTS, INC.

Written dimensions on these drawings shall have precedence over scaled dimensions. Contractors shall verify and be responsible for all dimensions and conditions on the job and this office shall be notified of any variations from the dimensions and conditions shown by these drawings. Shop details shall be submitted to this office for approval before proceeding with fabrication.

© Copyrighted 2019

DATE: 02/8/2019

JOB NO: 15058

A2.5

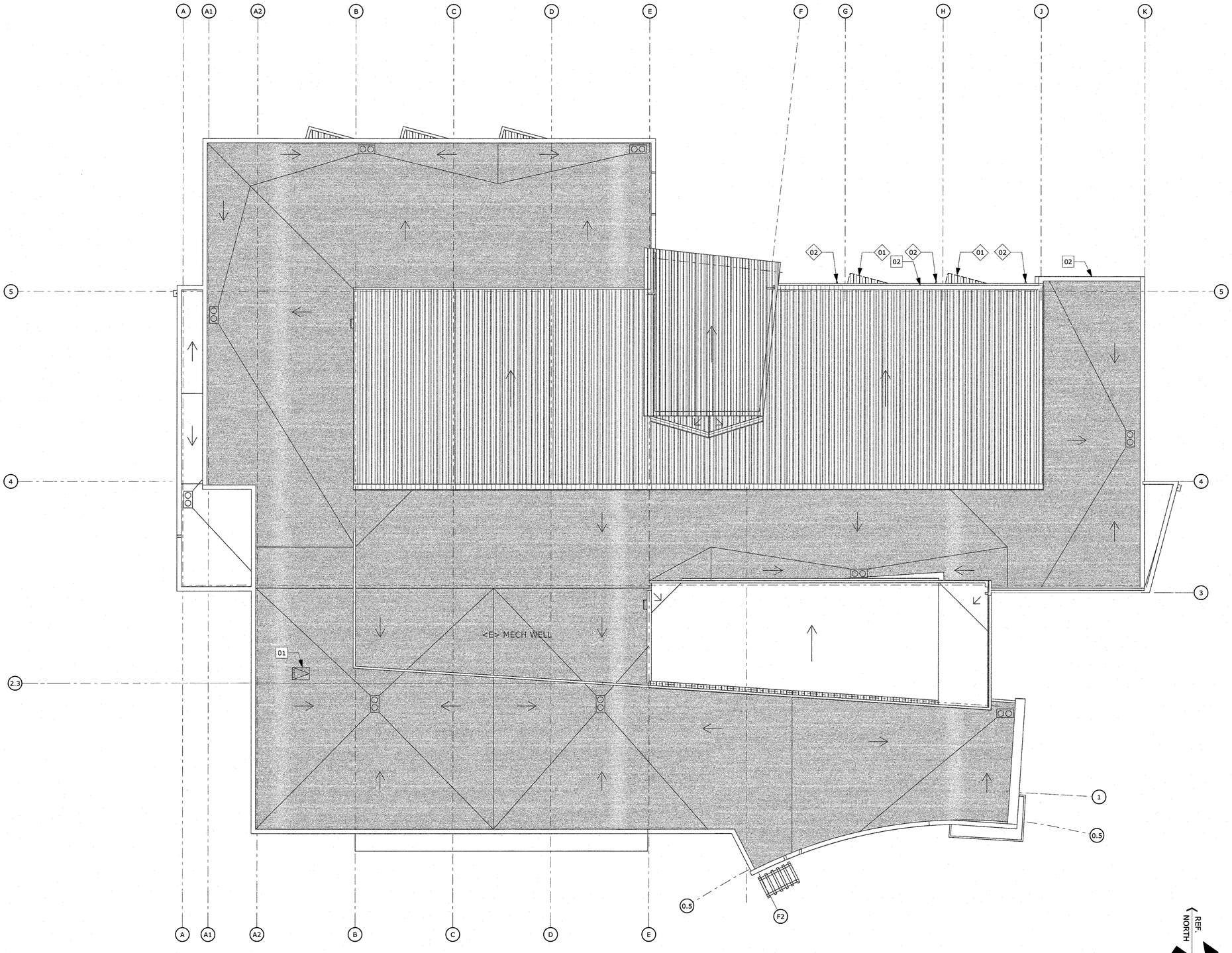

EXISTING & DEMO ROOF PLAN 1
SCALE: 3/32" = 1'-0"

GENERAL NOTES

1. ROOF CLASSIFICATION A PER CBC TABLE 15-A & SECTION 1504

DEMOLITION KEY NOTES

01 REMOVE <E> ROOF

02 CUT <E> RWL AND PREPARE FOR NEW

KEY NOTES

01 <E> ROOF ACCESS HATCH AND LADDER

02 <E> PARAPET

JOB COPY
These plans must be kept on the job at all times.
CITY OF MORGAN HILL
BUILDING DIVISION

SYMBOL LEGEND

<E> ROOF ACCESS HATCH AND LADDER

<E> MTL ROOF

<E> BUILT-UP ROOF

WESTON MILES
ARCHITECTS
17500 Depot Street, Suite #200
Morgan Hill, CA 95037
1 •408 • 779 • 6686
• Architecture • Landscape •

REGISTERED ARCHITECT
No. C 18,552
EXPIRES 12-31-19
STATE OF CALIFORNIA
NOT VALID WITHOUT SIGNATURE

REVISIONS
1 03/28/2019 PLAN REVIEW #2
2
3

EXISTING & DEMO ROOF PLAN

MORGAN HILL LIBRARY ADDITION

CITY OF MORGAN HILL
660 W MAIN AVE, MORGAN HILL, CA 95037

These drawings are instruments of service and are the property of WESTON MILES ARCHITECTS, INC. All designs and other information on the drawings are for use on the specified project and shall not be used otherwise without the written permission of WESTON MILES ARCHITECTS, INC.

Written dimensions on these drawings shall have precedence over scaled dimensions. Contractors shall verify and be responsible for all dimensions and conditions on the job and this office shall be notified of any variations from the dimensions and conditions shown by these drawings. Shop details shall be submitted to this office for approval before proceeding with fabrication.

© Copyrighted 2019

DATE: 02/8/2019

JOB NO: 15058

A2.6

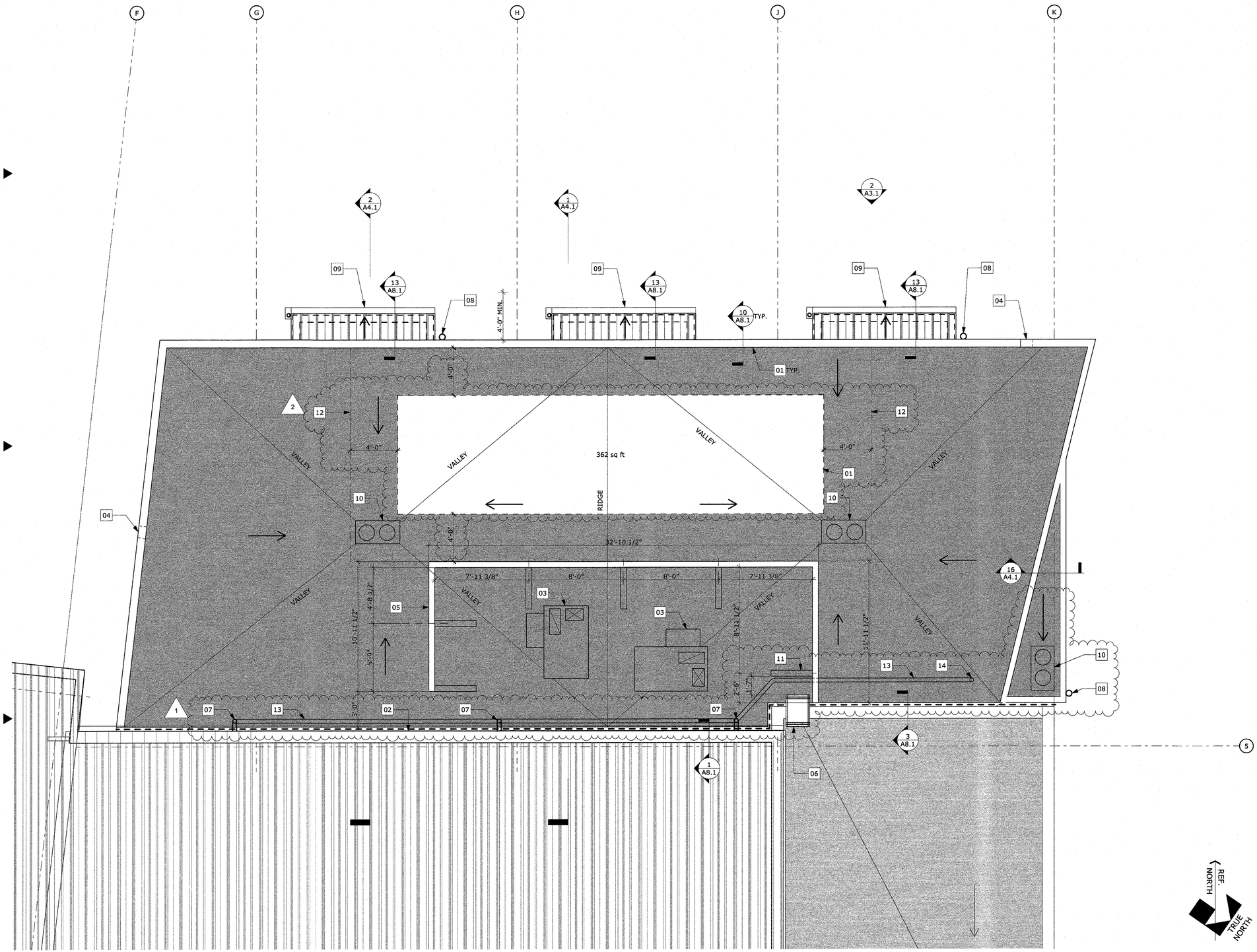

ROOF PLAN
SCALE: 1/4" = 1'-0"

1

GENERAL NOTES

1. ROOF CLASSIFICATION A PER CBC TABLE 15-A & SECTION 1504
2. ALL ROOFTOP MECHANICAL EQUIPMENT SHALL BE SCREENED FROM GROUND LEVEL

KEY NOTES

##

01	PARAPET WALL
02	SEISMIC JOINT
03	NEW HVAC LOCATION
04	ROOF DRAIN OVERFLOW SCUPPER
05	MECHANICAL EQUIPMENT SCREEN - SSD
06	ROOF PARAPET LADDER - SEE DETAIL 19/A8.2
07	<E> DOWNSPOUT - MODIFY PER DETAIL 9/A8.2
08	COPPER DOWN SPOUT & SCUPPER
09	COPPER GUTTER
10	ROOF DRAIN PER DETAIL 3/A8.2
11	SCREEN WALL BRACE, TYP. - SSD
12	4'-0" MIN. CLEAR PERIMETER FOR SOALR READINESS PER CBC 3111.2.3.1
13	HORIZONTAL RWL ON ROOF - SEE PLUMBING DRAWINGS
14	SEE PLUMBING FOR RWL CONTINUATION

1

SYMBOL LEGEND

- HVAC - PARAPET WALL TO BLOCK VIEW PER M.H. STANDARDS
- ROOF DRAIN
- <E> ROOF ACCESS HATCH AND LADDER
- MTL ROOF
- TPO
- <E> MTL ROOF
- <E> BUILT-UP ROOF

JOB COPY
These plans must be kept on the job at all times.
CITY OF MORGAN HILL
BUILDING DIVISION

WESTON MILES
ARCHITECTS
17500 Depot Street, Suite #200
Morgan Hill, CA 95037
1 •408 • 779 • 6686
• Architecture • Landscape •

LICENSED ARCHITECT
No. C 18,552
EXPIRES 06-30-19
STATE OF CALIFORNIA
NOT VALID WITHOUT SIGNATURE

REVISIONS
1 03/28/2019 PLAN REVIEW #2
2 05/01/2019 PLAN REVIEW #3
3

BUILDING DEPT.
MAY 02 2019
CITY OF MORGAN HILL

ROOF PLAN

MORGAN HILL LIBRARY ADDITION

CITY OF MORGAN HILL
660 W MAIN AVE, MORGAN HILL, CA 95037

These drawings are instruments of service and are the property of WESTON MILES ARCHITECTS, INC. All designs and other information on the drawings are for use on the specified project and shall not be used otherwise without the written consent and permission of WESTON MILES ARCHITECTS, INC.

Written dimensions on these drawings shall have precedence over scaled dimensions. Contractors shall verify and be responsible for all dimensions and conditions on the job and this office shall be notified of any variations from the dimensions and conditions shown by these drawings. Shop details shall be submitted to this office for approval before proceeding with fabrication.

© Copyrighted 2019

DATE: 02/8/2019

JOB NO: 15058

A2.7

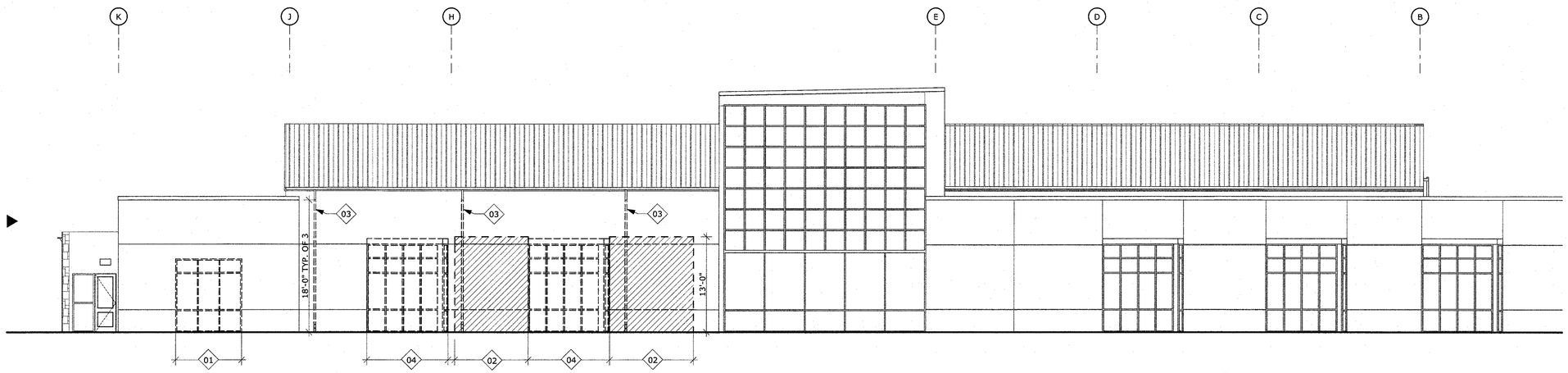

DEMO WEST ELEVATION (2)
SCALE: 1/8" = 1'-0"

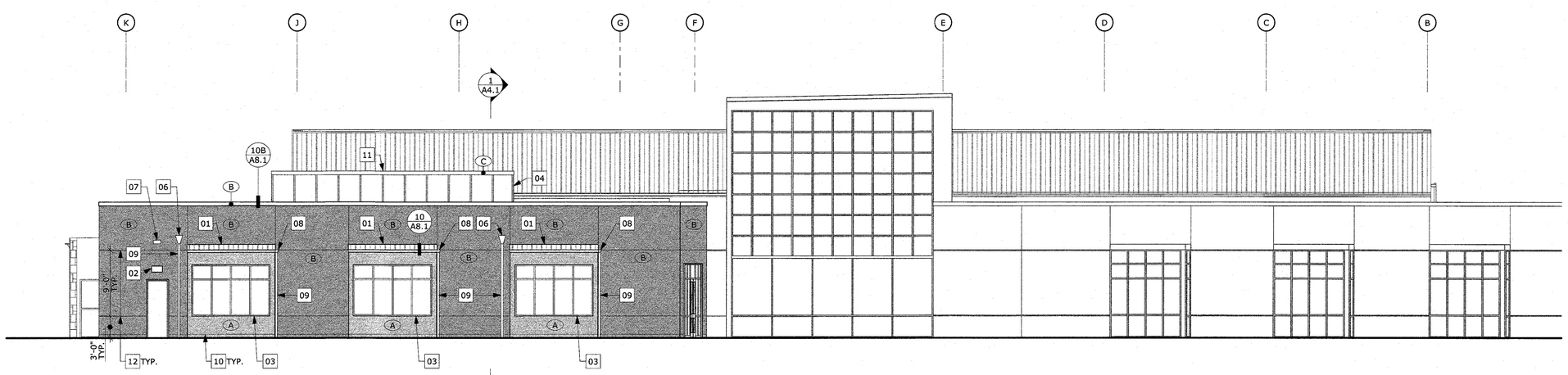

WEST ELEVATION (1)
SCALE: 1/8" = 1'-0"

GENERAL NOTES

1. COPPER SCUPPER, RAINWATER LEADER AND DOWNSPOUTS ARE NOT TO BE PAINTED
2. PAINT CONCRETE CURB SAME COLOR AS WALL ABOVE.
3. CEMENT PLASTER FINISH TEXTURE TO MATCH EXISITNG.

DEMOLITION NOTES

##

01 REMOVE AND DISCARD <E> STOREFRONT WINDOW - SEE DETAIL 1/A2.0

02 REMOVE AND DISCARD PORTION OF EXISITNG WALL - SEE DETAIL 1/A2.0

03 CUT AND REMOVE PORTION OF <E> RWL

04 REMOVE AND DISCARD <E> STOREFRONT WINDOW, ROOF, GUTTER, RWL AND FOOTING - SEE DETAIL 1/A2.0

KEY NOTES

##

01 STANDING SEAM ROOF TO MATCH <E> IN "COOL CHAMPAGNE" FINISH

02 LIGHT FIXTURE

03 (N) ALUMINIUM WINDOW

04 KALWALL MECHANICAL EQUIPMENT SCREEN - SSD

06 COPPER SCUPPER, SEE DETAIL 1/A8.2

07 OVERFLOW SCUPPER

08 COPPER GUTTER

09 COPPER DOWN SPOUT, SEE DETAIL 2/A8.2

10 CONCRETE CURB, SEE 9/A7.1

11 METAL FASCIA TO MATCH STANDING SEAM METAL ROOF IN "COOL CHAMPAGNE" FINISH

12 CEMENT PLASTER CONTROL JOINT

PAINT SCHEDULE

SEE SPECIFICATIONS FOR ADDITIONAL INFORMATION

A BODY PAINT - BENJAMIN MOORE HC-81 MANCHESTER TAN

B BODY PAINT - KELLY MOORE KM5764 MENDOCINO HILLS

C "COOL CHAMPAGNE" SHEET METAL FASCIA

JOB COPY
These plans must be kept on the job at all times.
CITY OF MORGAN HILL
BUILDING DIVISION

WESTON MILES
ARCHITECTS
17500 Depot Street, Suite #200
Morgan Hill, CA 95037
1 •408 • 779 • 6686
• Architecture • Landscape •

LICENSED ARCHITECT
No. C 18,552
Expires 12-31-20
STATE OF CALIFORNIA
NOT VALID WITHOUT SIGNATURE

REVISIONS
1 03/28/2019 PLAN REVIEW #2
2
3

EXTERIOR ELEVATIONS

MORGAN HILL LIBRARY ADDITION

CITY OF MORGAN HILL
660 W MAIN AVE, MORGAN HILL, CA 95037

These drawings are instruments of service and are the property of WESTON MILES ARCHITECTS, INC. All designs and other information on the drawings are for use on the specified project and shall not be used otherwise without the expressed written permission of WESTON MILES ARCHITECTS, INC.

Written dimensions on these drawings shall have precedence over scale dimensions. Contractor shall be fully responsible for all dimensions and conditions on the job and this office shall be notified of any variations from the dimensions and conditions shown by these drawings. Shop details shall be submitted to this office for approval before proceeding with fabrication.

© Copyrighted 2019

DATE: 02/8/2019

JOB NO: 15058

A3.1

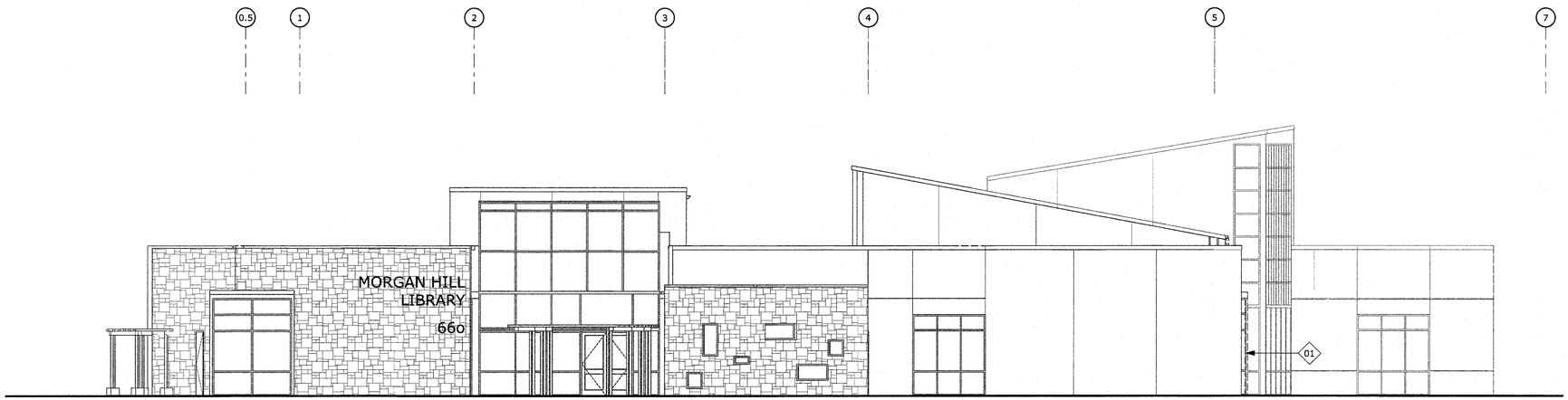

DEMO NORTH ELEVATION (2)
SCALE: 1/8" = 1'-0"

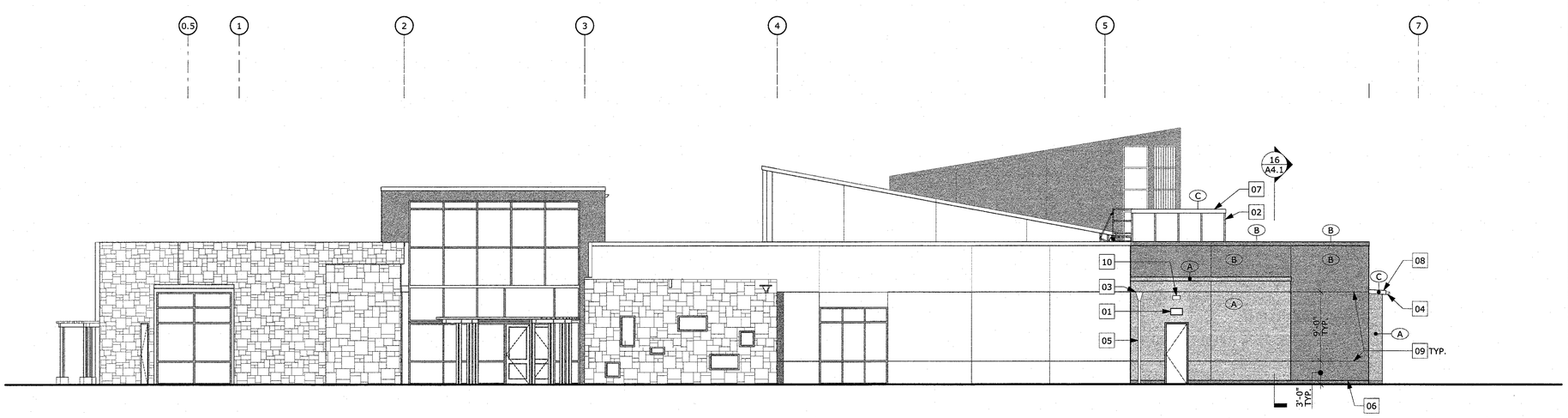

NORTH ELEVATION (1)
SCALE: 1/8" = 1'-0"

GENERAL NOTES

1. COPPER SCUPPER, RAINWATER LEADER AND DOWNSPOUTS ARE NOT TO BE PAINTED
2. PAINT CONCRETE CURB SAME COLOR AS WALL ABOVE.
3. CEMENT PLASTER FINISH TEXTURE TO MATCH EXISITNG.

DEMOLITION NOTES

##

01 REMOVE AND DISCARD <E> STOREFRONT WINDOW, ROOF, GUTTER, RWL AND FOOTING - SEE DETAIL 1/A2.0

KEY NOTES

##

01 LIGHT FIXTURE
02 KALWALL MECHANICAL EQUIPMENT SCREEN - SSD
03 COPPER SCUPPER, SEE DETAIL 1/A8.2
04 COPPER GUTTER
05 COPPER DOWN SPOUT, SEE DETAIL 2/A8.2
06 CONCRETE CURB, SEE 9/A7.1
07 METAL FASCIA TO MATCH STANDING SEAM METAL ROOF IN "COOL CHAMPAGNE" FINISH
08 STANDING SEAM METAL ROOF IN "COOL CHAMPAGNE" FINISH
09 CEMENT PLASTER CONTROL JOINT
10 OVERFLOW SCUPPER

PAINT SCHEDULE

SEE SPECIFICATIONS FOR ADDITIONAL INFORMATION

A BODY PAINT - BENJAMIN MOORE HC-81 MANCHESTER TAN
B BODY PAINT - KELLY MOORE KM5764 MENDOCINO HILLS
C "COOL CHAMPAGNE" SHEET METAL FASCIA

JOB COPY
These plans must be kept on the job at all times.
CITY OF MORGAN HILL
BUILDING DIVISION

WESTON MILES
ARCHITECTS
17500 Depot Street, Suite #200
Morgan Hill, CA 95037
1 •408 • 779 • 6686
• Architecture • Landscape •

REGISTERED ARCHITECT
No. C 18,552
EXPIRES 06-30-20
STATE OF CALIFORNIA
NOT VALID WITHOUT SIGNATURE

REVISIONS
1 03/28/2019 PLAN REVIEW #2
2
3

EXTERIOR ELEVATIONS

MORGAN HILL LIBRARY ADDITION

CITY OF MORGAN HILL
660 W MAIN AVE, MORGAN HILL, CA 95037

These drawings are instruments of service and are the property of WESTON MILES ARCHITECTS, INC. All designs and other information on the drawings are for use on the specified project and shall not be used otherwise without the written consent and permission of WESTON MILES ARCHITECTS, INC.

Written dimensions on these drawings shall have precedence over scaled dimensions. Contractors shall verify and be responsible for all dimensions and conditions on the job and this office shall be notified of any variations from the dimensions and conditions shown by these drawings. Shop details shall be submitted to this office for approval before proceeding with fabrication.

© Copyrighted 2019

DATE: 02/8/2019
JOB NO: 15058

A3.2

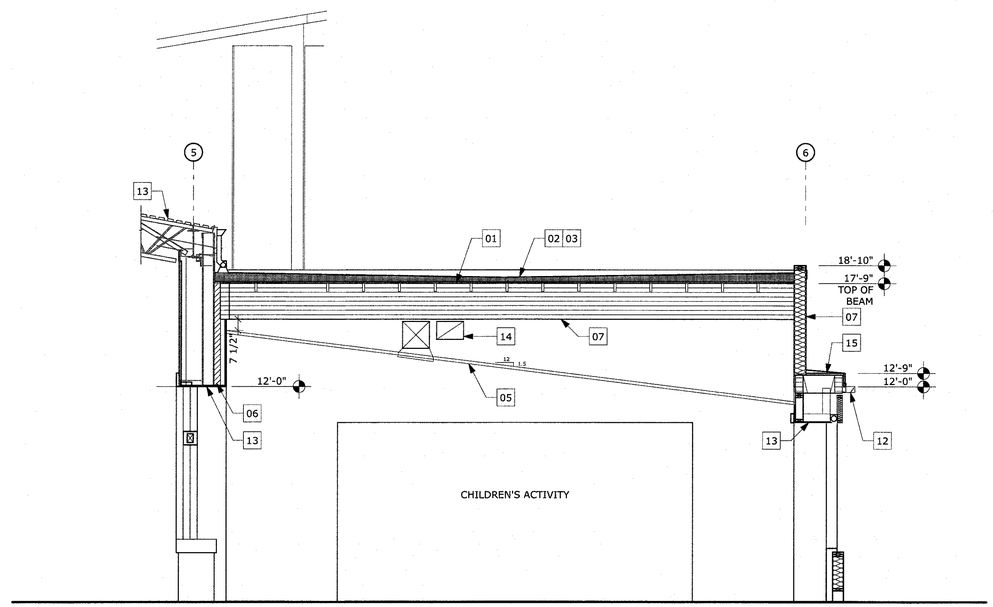

ROOM 143 CHILDREN'S ACTIVITY (2)
SCALE: 1/4" = 1'-0"

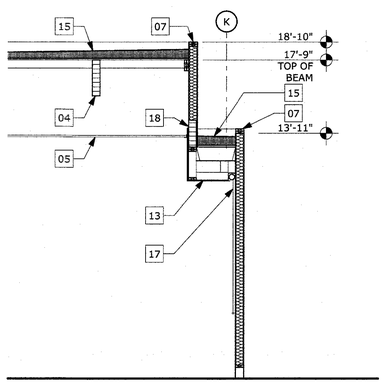

CHILDRENS PROGRAM 2 (16)
SCALE: 1/4" = 1'-0"

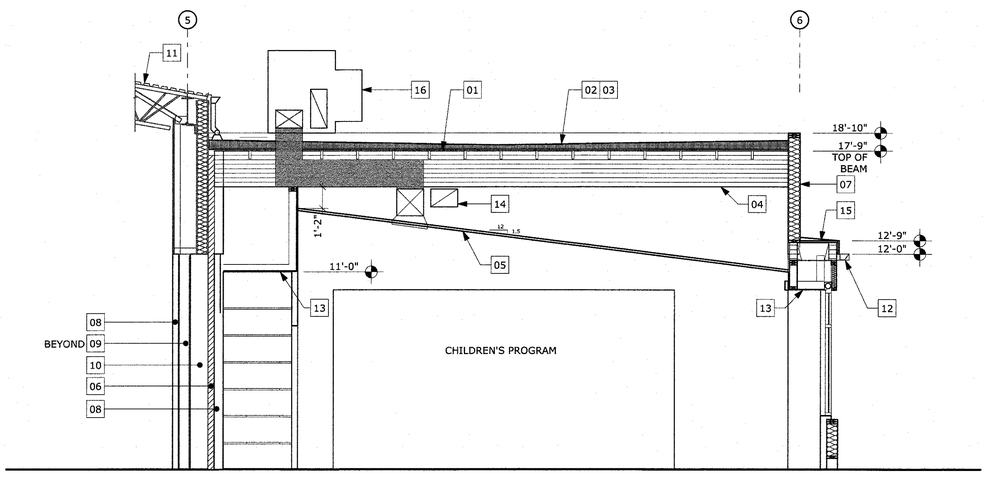

ROOM 144 CHILDREN'S PROGRAM (1)
SCALE: 1/4" = 1'-0"

GENERAL NOTES

1. IN CONCEALED SPACES OF STUD WALLS PROVIDE 2X SOLID FIRE BLOCKING AT CEILING LEVELS, FLOOR LEVELS AND AT 10 FOOT INTERVALS BOTH HORIZONTAL & VERTICAL. ALL FIRE BLOCKING SHALL BE IN ACCORDANCE WITH CBC SECTION 717

KEY NOTES

##

01	ROOF SHEATHING - SEE STRUCTURAL
02	RIGID INSULATION
03	TPO ROOF
04	GLULAM BEAM - SEE STRUCTURAL
05	ACOUSTIC T-BAR CEILING
06	4" SEISMIC SEPARATOR
07	PARAPET WALL
08	NEW WALL
09	<E> COLUMN
10	(N) INFILL @ <E> WALL
11	<E> ROOF
12	GUTTER
13	GYP. BD. CEILING
14	MECHANCIAL SUPPY/RETURN AIR DUCT
15	STANDING SEAM METAL ROOF OVER PLYWOOD SHEATHING OVER WOOD PURLINS
16	HVAC UNIT
17	PROJECTOR SCREEN
18	HEADER - SEE STRUCTURAL

JOB COPY
These plans must be kept on the job at all times.
CITY OF MORGAN HILL
BUILDING DIVISION

WESTON MILES
ARCHITECTS
17500 Depot Street, Suite #200
Morgan Hill, CA 95037
1 •408 • 779 • 6686
• Architecture • Landscape •

LICENSED ARCHITECT
No. C 18,552
EXPIRES 08-31-19
STATE OF CALIFORNIA
NOT VALID WITHOUT SIGNATURE

REVISIONS
1 03/28/2019 PLAN REVIEW #2
2
3

BUILDING SECTIONS

MORGAN HILL LIBRARY ADDITION

CITY OF MORGAN HILL
660 W MAIN AVE, MORGAN HILL, CA 95037

These drawings are instruments of service and are the property of WESTON MILES ARCHITECTS, INC. All designs and plans indicated on the drawings are for use on the specified project and shall not be used on any venue without the expressed written permission of WESTON MILES ARCHITECTS, INC.

Written dimensions on these drawings shall have precedence over scaled dimensions. Contractors and sub-contractors are responsible for all dimensions and conditions on the job and this office shall be notified of any variations from the dimensions and conditions shown by these drawings. Shop details shall be submitted to this office for approval before proceeding with fabrication.

© Copyrighted 2019

DATE: 02/8/2019

JOB NO: 15058

A4.1

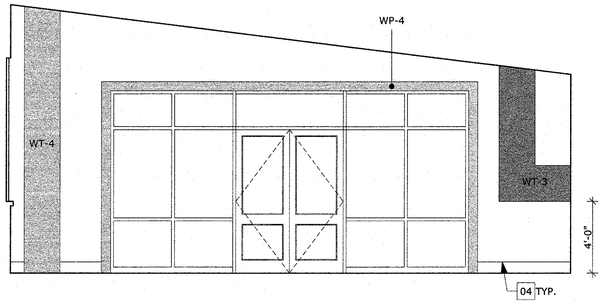

WEST ACTIVITY RM INT. ELEVATION (16)
SCALE: 1/4" = 1'-0"

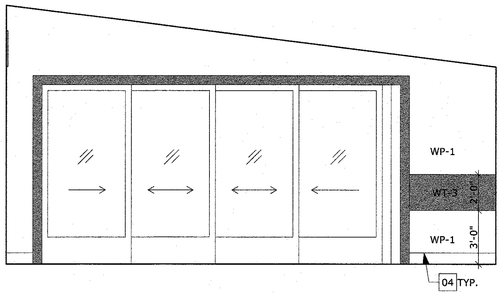

WEST PROGRAM RM INT. ELEVATION (8)
SCALE: 1/4" = 1'-0"

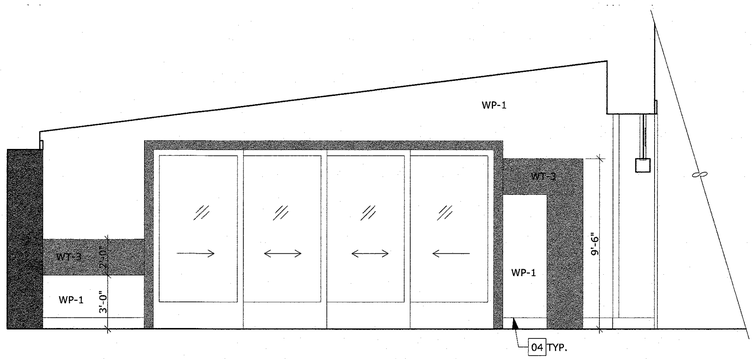

EAST ACTIVITY RM INT. ELEVATION (15)
SCALE: 1/4" = 1'-0"

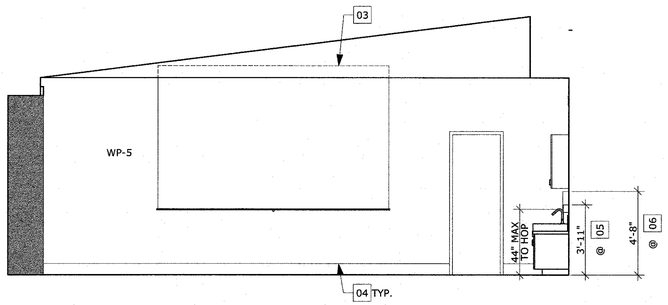

EAST PROGRAM RM INT. ELEVATION (7)
SCALE: 1/4" = 1'-0"

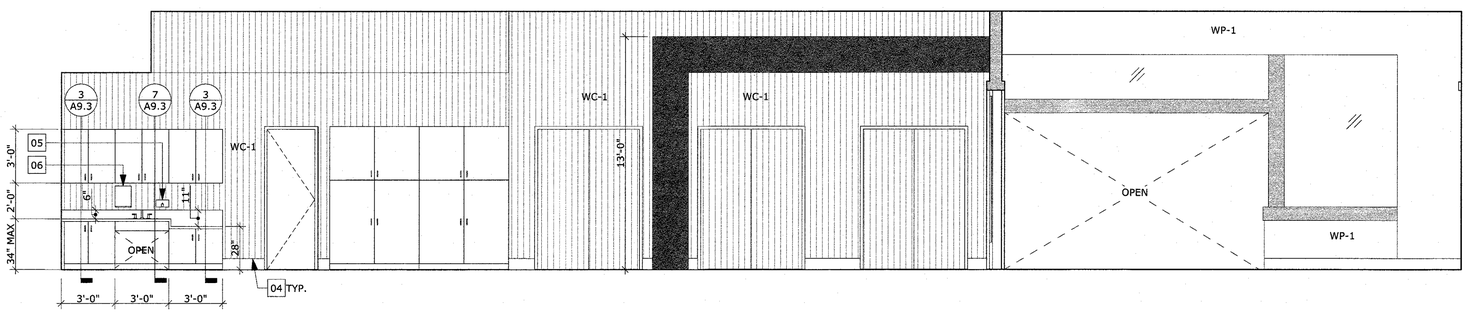

SOUTH INT. ELEVATION (6)
SCALE: 1/4" = 1'-0"

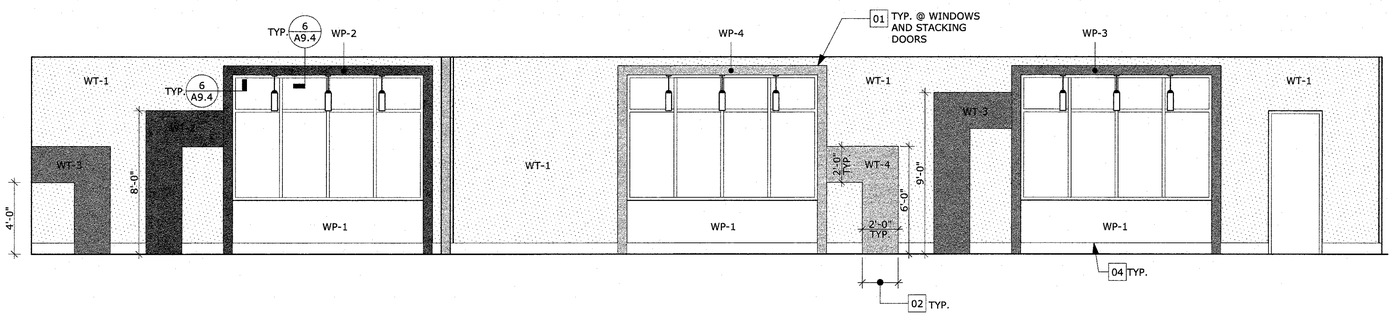

NORTH INT. ELEVATION (4)
SCALE: 1/4" = 1'-0"

GENERAL NOTES

1. HOP - HIGHEST OPERABLE PART

KEY NOTES

##

- 01 6" TRIM PAINTED, TYP.
- 02 ALIGN 2'-0" WIDE WALL TILE WITH 2'-0" WIDE COLORED CARPET TILE. SEE FINISH PLAN
- 03 CEILING MOUNTED PROJECTION SCREEN
- 04 WOOD BASE, TYP. PER DETAIL 5/A9.4
- 05 WALL MOUNTED SOAP DISPENSER
- 06 WALL MOUNTED PAPERTOWEL DISPENSER

FINISH LEGEND

SEE FINISH PLAN A2.3 FOR ADDITIONAL INFORMATION

WT-1 WT-2 WT-3 WT-4

WP-1 WP-2 WP-3 WP-4

WC-1

JOB COPY
These plans must be kept on the job at all times.
CITY OF MORGAN HILL
BUILDING DIVISION

WESTON MILES
ARCHITECTS
17500 Depot Street, Suite #200
Morgan Hill, CA 95037
1 •408 • 779 • 6686
• Architecture • Landscape •

LICENSED ARCHITECT
No. C 18,552
EXPIRES 08-31-19
STATE OF CALIFORNIA
NOT VALID WITHOUT SIGNATURE

REVISIONS
1 03/28/2019 PLAN REVIEW #2
2
3

INTERIOR ELEVATIONS

MORGAN HILL LIBRARY ADDITION

CITY OF MORGAN HILL
660 W MAIN AVE, MORGAN HILL, CA 95037

These drawings are instruments of service and are the property of WESTON MILES ARCHITECTS, INC. All designs and other information on the drawings are for use on the specified project and shall not be used otherwise without the expressed written permission of WESTON MILES ARCHITECTS, INC.

Written dimensions on these drawings shall have precedence over scaled dimensions. Contractors shall verify and be responsible for all dimensions and conditions on the job and this office shall be notified of any variations from the dimensions and conditions shown by these drawings. Shop details shall be submitted to this office for approval before proceeding with fabrication.

© Copyrighted 2019

DATE: 02/8/2019

JOB NO: 15058

A5.1

GENERAL NOTES

1. HOP - HIGHEST OPERABLE PART
2. RS - REFLECTIVE SURFACE

KEY NOTES

##

01	2X10 TRIM PAINTED, SEE 6/A9.4 SIM.
02	<E> CEILING SOFFIT
03	<E> COLUMN FURRED AND PAINTED, SEE DETAIL 17/A9.4
04	WOOD BASE, TYP. PER DETAIL 5/A9.4
05	<E> WOOD BASE
06	PAINT WALL AROUND OPENING WITH ACCENT COLOR PAINT PER FINISH SCHEDULE
07	CORNER GUARD

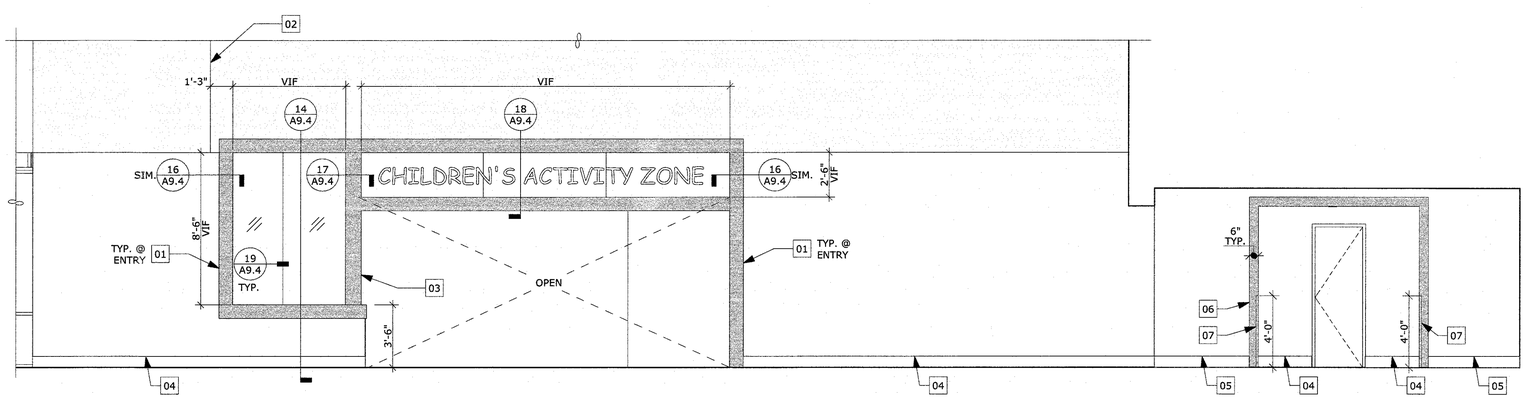

ROOM 106 ACTIVITY ZONE
SCALE: 1/4" = 1'-0"
1

FINISH LEGEND

- WP-2
- WP-3
- WP-4

JOB COPY
These plans must be kept on the job at all times.
CITY OF MORGAN HILL
BUILDING DIVISION

WESTON MILES
ARCHITECTS
17500 Depot Street, Suite #200
Morgan Hill, CA 95037
1 •408 • 779 • 6686
• Architecture • Landscape •

NOT VALID WITHOUT SIGNATURE

REVISIONS
1 03/28/2019 PLAN REVIEW #2
2
3

INTERIOR ELEVATIONS

MORGAN HILL LIBRARY ADDITION

CITY OF MORGAN HILL
660 W MAIN AVE, MORGAN HILL, CA 95037

These drawings are instruments of service and are the property of WESTON MILES ARCHITECTS, INC. All designs and other information on the drawings are for use on the specified project and shall not be used otherwise without the expressed written permission of WESTON MILES ARCHITECTS, INC.

Written dimensions on these drawings shall have precedence over scaled dimensions. Contractors shall verify and be responsible for all dimensions and conditions on the job and this office shall be notified of any variations from the dimensions and conditions shown on these drawings. Shop details shall be submitted to this office for approval before proceeding with fabrication.

© Copyrighted 2019

DATE: 02/8/2019

JOB NO: 15058

A5.2

DOOR TYPES

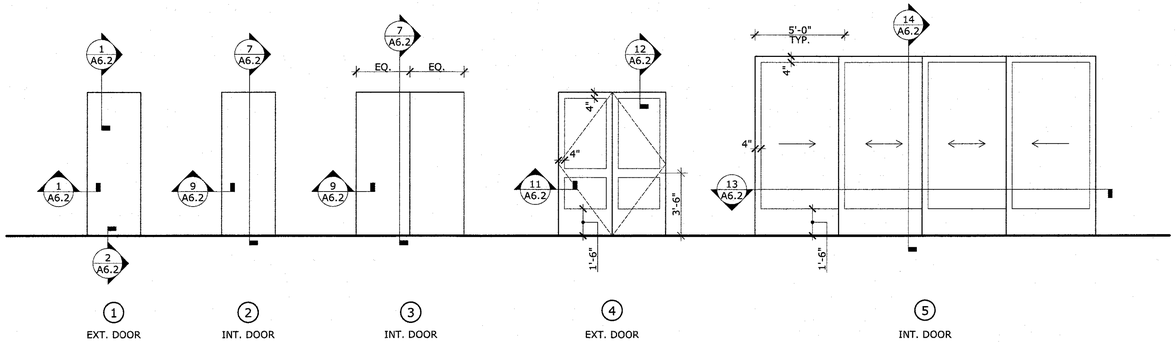

WINDOW TYPES

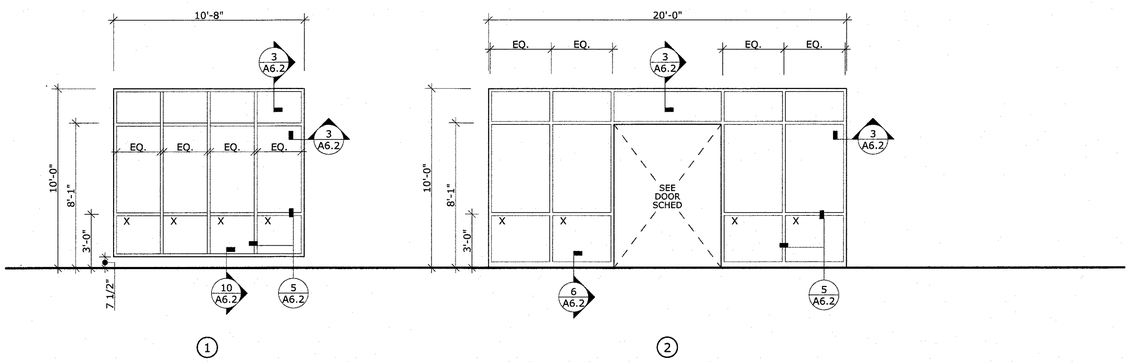

DOOR & WINDOW TAGS FLOOR PLAN

SCALE: 1/8" = 1'-0"

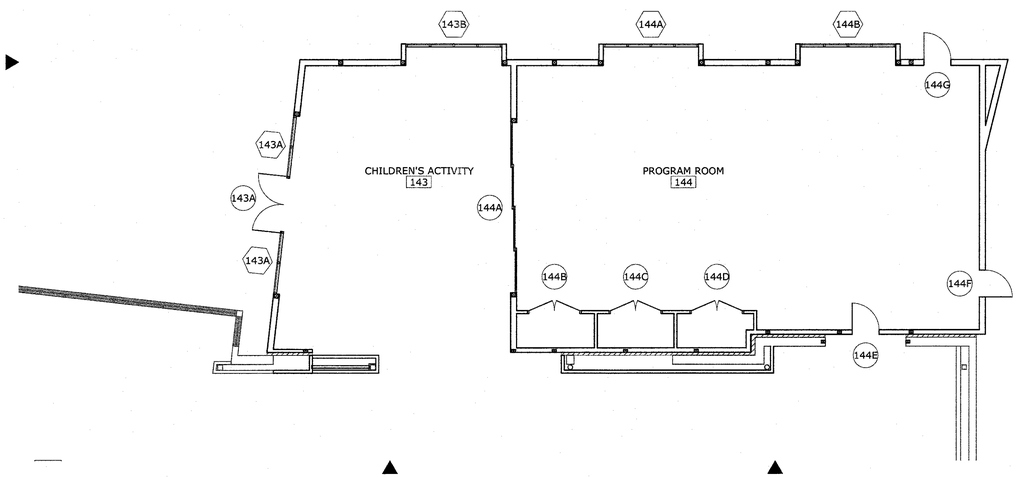

DOOR GENERAL NOTES

1. DOOR OPENING EFFORTS - NOT TO EXCEED 5 LBS AT EXTERIOR & INTERIOR. 15 LBS FORCE REQUIRED TO ACHIEVE POSITIVE LATCHING FOR FIRE DOORS
2. ALL DOORS ARE EQUIPPED WITH HAND-ACTIVED HARDWARE, INCLUDING ALL DEAD BOLTS, ARE TO BE MOUNTED BETWEEN 30" & 44" ABOVE THE FINISH FLOOR (36" PREFERRED).
3. ALL DOORS, FINISH, AND LEVER HARDWARE, SEE SPECS
4. ALL DOOR HEADER HEIGHTS = 7'-0" U.N.O. SEE DOOR SCHEDULE FOR APPROPRIATE HEIGHT
5. VERIFY DOOR ROUGH OPENING SIZE IN FIELD
6. FOR EXACT THROAT DIMENSIONS OF DOOR FRAMES, AND ADDITIONAL INFORMATION, REFER TO STRUCTURAL SHEAR WALL PLAN, ARCHITECTRUAL FINISH SCHEDULE AND DETAILS
7. GLASS IN DOORS SHALL BE TEMPERED. SEE SPECIFICATIONS
8. 3'x7' = 3'-0" x 7'-0"
9. GATES - WHEN OPEN, MINIMUM CLEAR WIDTH TO BE 32"
10. SEE EGRESS PLAN ON A2.2 FOR SIGNANGE

DOOR SPECIFIC REMARKS

1. EXIT DOORS SHALL BE OPENED FROM THE INSIDE WITHOUT THE USE OF A KEY OR ANY SPECIAL KNOWLEDGE OR EFFORT. MANUALLY OPERATED EDGE - OR SURFACE MOUNTED FLUSH BOLTS AND SURFACE BOLTS SHALL NOT BE USED ON EXIT DOORS. ALL EXIT DOORS SHALL BE PROVIDED WITH PANIC HARDWARE PER SECTION 1007.2.5, AND KICK PLATE AT PUSH SIDE.
2. SEE WINDOW SCHEDULE FOR STOREFRONT SYSTEM CONFIGURATION

DOOR SCHEDULE

####

ID	TYPE	SIZE WXH	DOOR MATERIAL	DOOR FINISH	FRAME MATERIAL	FRAME FINISH	HARDWARE	SIGNAGE	SPECIFIC REMARKS
143A	4	6'-0"×8'-0"	ALUMINUM	CLEAR ANODIZED	ALUMINUM	CLEAR ANODIZED	02	SEE SPECS & A2.2	2
144A	5	19'-0"×10'-0"	ALUMINUM	CLEAR ANODIZED	ALUMINUM	CLEAR ANODIZED	02	SEE SPECS & A2.2	
144B	3	6'-0"×8'-0"	WOOD	LAMINATE	ALUMINUM	CLEAR ANODIZED	04	SEE SPECS & A2.2	
144C	3	6'-0"×8'-0"	WOOD	LAMINATE	ALUMINUM	CLEAR ANODIZED	04	SEE SPECS & A2.2	
144D	3	6'-0"×8'-0"	WOOD	LAMINATE	ALUMINUM	CLEAR ANODIZED	04	SEE SPECS & A2.2	
144E	2	3'-0"×8'-0"	WOOD	STAINED	ALUMINUM	CLEAR ANODIZED	03	SEE SPECS & A2.2	
144F	1	3'-0"×8'-0"	METAL	PAINT	METAL	PAINT	01	SEE SPECS & A2.2	1
144G	1	3'-0"×8'-0"	METAL	PAINT	METAL	PAINT	01	SEE SPECS & A2.2	1

WINDOW GENERAL NOTES

1. SAFETY GLAZING - ALL GLAZING SHALL COMPLY W/ CBC 2016
   x= tempered
2. SEE WINDOW TYPES FOR WINDOW SIZES
3. A WINDOW THAT IS IN THE PATH OF TRAVEL SHALL HAVE PROJECTION OF NO MORE THAN 4"
4. SEE DETAIL 4/A6.2 FOR TYPICAL FLASHING DETAIL

WINDOW SPECIFIC REMARKS

1. NONE

WINDOW SCHEDULE

####

ID	TYPE	MATERIAL	FINISH	GLAZING	SPECIFIC REMARKS
143A	2	ALUMINUM	CLEAR ANODIZED	CLEAR	
143B	1	ALUMINUM	CLEAR ANODIZED	CLEAR	
144A	1	ALUMINUM	CLEAR ANODIZED	CLEAR	
144B	1	ALUMINUM	CLEAR ANODIZED	CLEAR	

JOB COPY
These plans must be kept on the job at all times.
CITY OF MORGAN HILL
BUILDING DIVISION

WESTON MILES
ARCHITECTS
17500 Depot Street, Suite #200
Morgan Hill, CA 95037
1 •408 • 779 • 6686
• Architecture • Landscape •

REGISTERED ARCHITECT
CHRISTOPHER WESTON MILES
No. C 18,552
EXPIRES: 08-31-20
STATE OF CALIFORNIA
NOT VALID WITHOUT SIGNATURE

REVISIONS
1 03/28/2019 PLAN REVIEW #2
2
3

DOOR & WINDOW SCHEDULE

MORGAN HILL LIBRARY ADDITION

CITY OF MORGAN HILL
660 W MAIN AVE, MORGAN HILL, CA 95037

These drawings are instruments of service and are the property of WESTON MILES ARCHITECTS, INC. All designs and other information on the drawings are for use on the specified project and shall not be used otherwise without the expressed written permission of WESTON MILES ARCHITECTS, INC.

Written dimensions on these drawings shall have precedence over scaled dimensions. Contractors shall verify and be responsible for all dimensions and conditions on the job and this office shall be notified of any variations from the dimensions and conditions shown by these drawings. Shop details shall be submitted to this office for approval before proceeding with fabrication.

© Copyrighted 2019

DATE: 02/8/2019

JOB NO.: 15058

A6.1

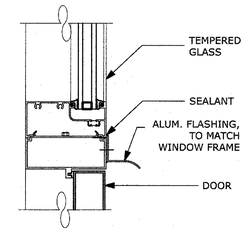

STOREFROND ALU DOOR HEAD (12)
SCALE: 3" = 1'-0"

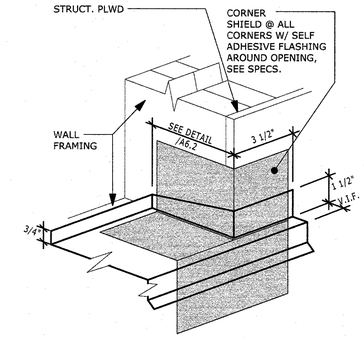

EXT WINDOW SILL DTL 3D (4)
SCALE: 3" = 1'-0"

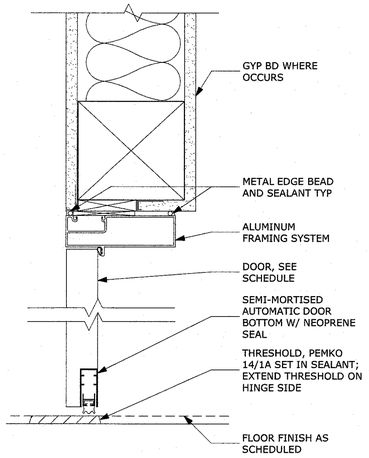

INTERIOR DOOR SOUND RATED (7)
SCALE: 3" = 1'-0"

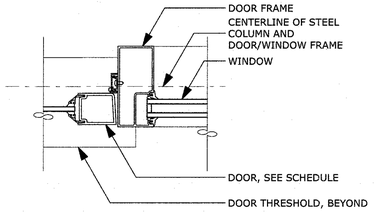

EXT. ALUM. DOOR JAMB (11)
SCALE: 3" = 1'-0"

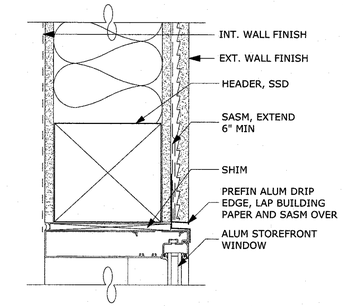

TYP EXT WINDOW HEAD (JAMB, SIM) (3)
SCALE: 3" = 1'-0"

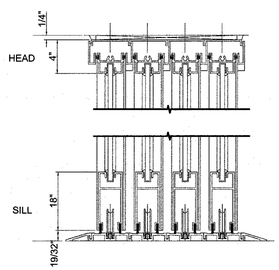

STACKING DOOR HEAD & SILL (14)
SCALE: 3" = 1'-0"

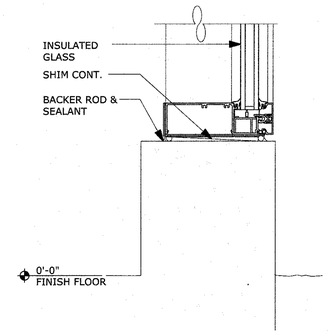

STOREFRONT ALU WIND BASE (10)
SCALE: 3" = 1'-0"

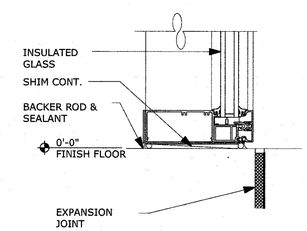

STOREFRONT ALU WIND BASE (6)
SCALE: 3" = 1'-0"

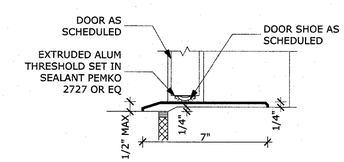

EXT DOOR THRESHOLD (2)
SCALE: 3" = 1'-0"

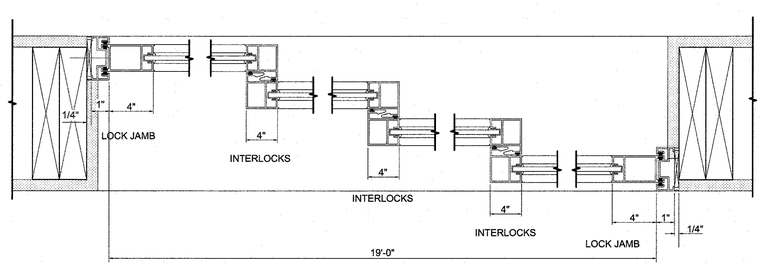

STACKING DOOR JAMB (13)
SCALE: 3" = 1'-0"

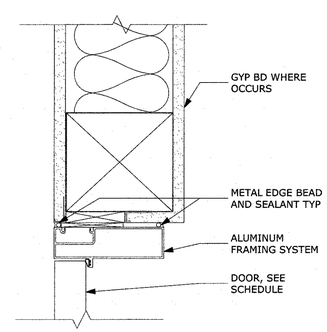

INTERIOR DOOR SOUND RATED (9)
SCALE: 3" = 1'-0"

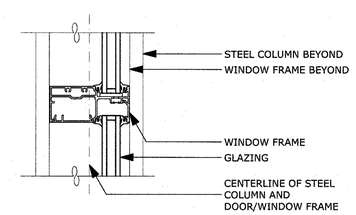

ALUM. WINDOW MULLION (5)
SCALE: 3" = 1'-0"

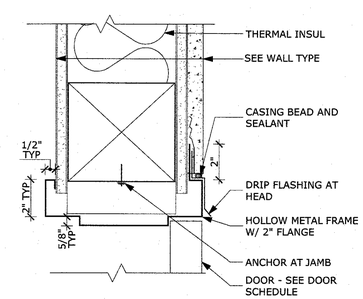

EXT DOOR HEAD/JAMB (1)
SCALE: 3" = 1'-0"

JOB COPY
These plans must be kept on the job at all times.
CITY OF MORGAN HILL
BUILDING DIVISION

WESTON MILES
ARCHITECTS
17500 Depot Street, Suite #200
Morgan Hill, CA 95037
1 •408 • 779 • 6686
• Architecture • Landscape •

LICENSED ARCHITECT
No. C 19,552
EXPIRES 06-30-20
STATE OF CALIFORNIA
NOT VALID WITHOUT SIGNATURE

REVISIONS
1 03/28/2019 PLAN REVIEW #2
2
3

DOOR & WINDOW DETAILS

MORGAN HILL LIBRARY ADDITION

CITY OF MORGAN HILL
660 W MAIN AVE, MORGAN HILL, CA 95037

These drawings are instruments of service and are the property of WESTON MILES ARCHITECTS, INC. All designs and other information on the drawings are for use on the specified project and shall not be used otherwise without the expressed written permission of WESTON MILES ARCHITECTS, INC.

Written dimensions on these drawings shall have precedence over scaled dimensions. Contractors shall verify and be responsible for all dimensions and conditions on the job and this office shall be notified of any variations from the dimensions and conditions shown by these drawings. Shop details shall be submitted to this office for approval before proceeding with fabrication.

© Copyrighted 2019

DATE: 02/8/2019

JOB NO: 15058

A6.2

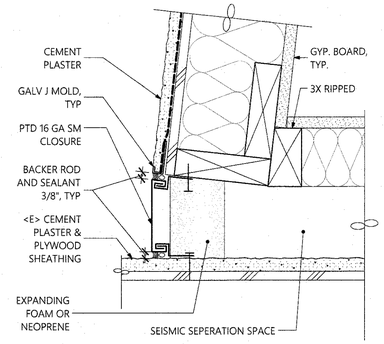

SEISMIC CLOSURE (24)
SCALE: 3" = 1'-0"

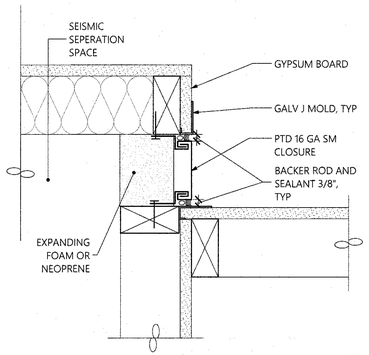

SEISMIC CLOSURE (22)
SCALE: 3" = 1'-0"

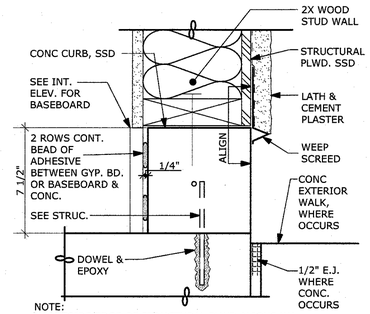

NOTE:
1. OUTSIDE EDGE OF STRUCTURAL PLWD ALIGNS W/ OUTSIDE FACE OF FOUNDATION.
2. SEE 9/A7.1 FOR CURB LOCATIONS AND CURB HEIGHT

EXT WALL BASE - MULTI POUR (8)
SCALE: 3" = 1'-0"

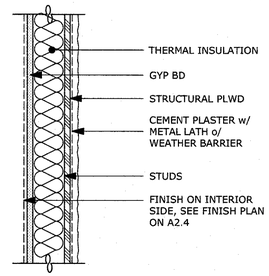

EXT GYP BD WALL - TYPE D (D)
SCALE: 1 1/2"= 1'-0"

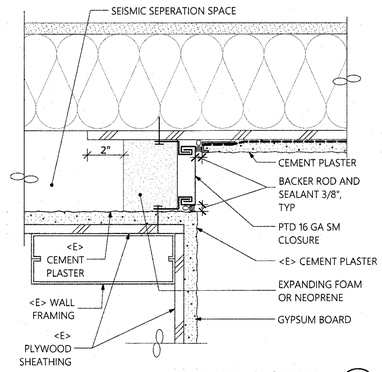

SEISMIC CLOSURE (23)
SCALE: 3" = 1'-0"

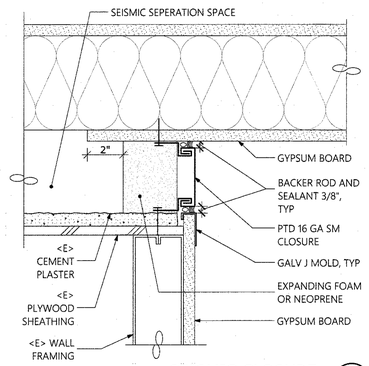

SEISMIC CLOSURE (21)
SCALE: 3" = 1'-0"

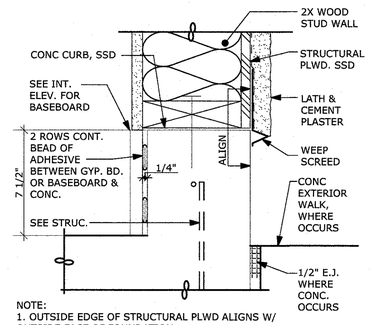

NOTE:
1. OUTSIDE EDGE OF STRUCTURAL PLWD ALIGNS W/ OUTSIDE FACE OF FOUNDATION.
2. SEE 9/A7.1 FOR CURB LOCATIONS AND CURB HEIGHT

EXT WALL BASE - SINGLE POUR (7)
SCALE: 3" = 1'-0"

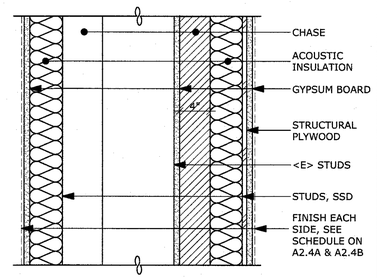

INT WALL - TYPE C (C)
SCALE: 1 1/2"= 1'-0"

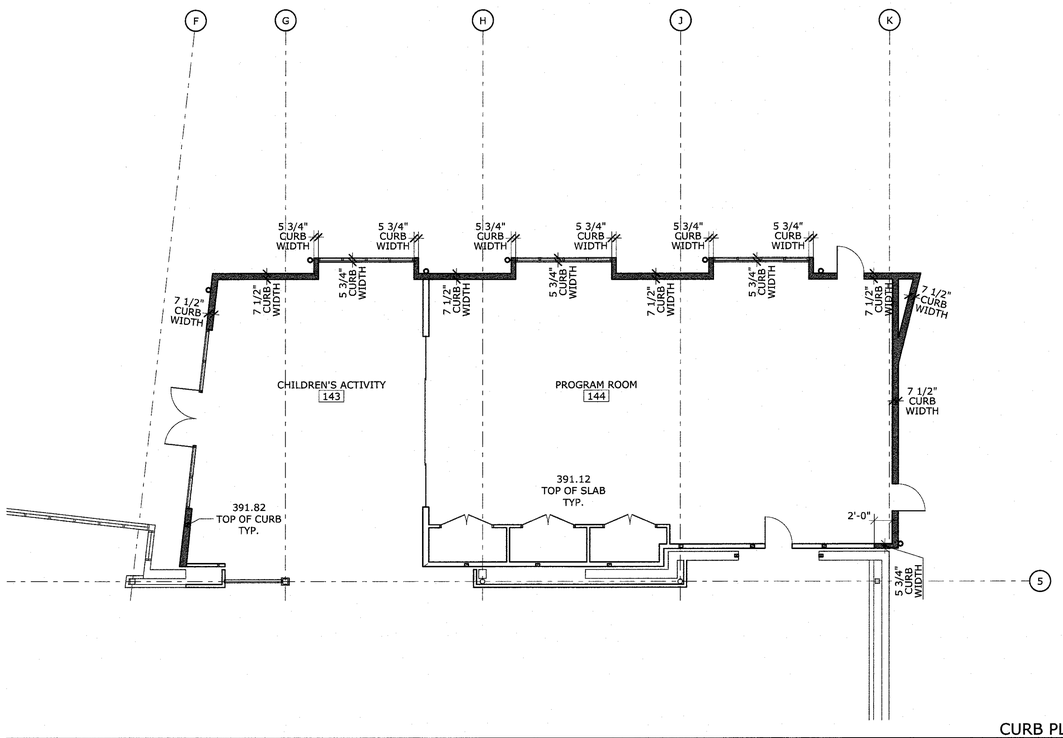

CURB PLAN (9)
SCALE: 1/8" = 1'-0"

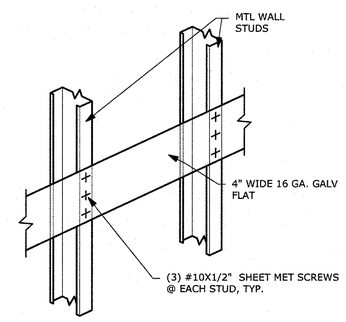

BACKING STRIP METAL (6)
SCALE: 1 1/2"= 1'-0"

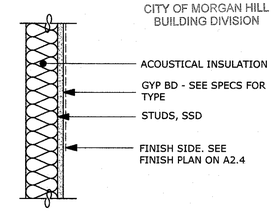

INT WALL - TYPE B (B)
SCALE: 1 1/2"= 1'-0"

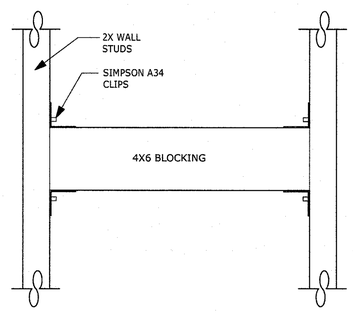

BACKING STRIP WOOD (5)
SCALE: 3" = 1'-0"

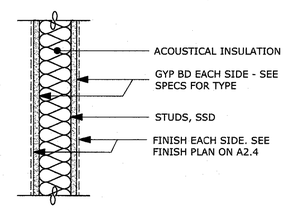

INT WALL - TYPE A (A)
SCALE: 1 1/2"= 1'-0"

JOB COPY
These plans must be kept on the job at all times.
CITY OF MORGAN HILL
BUILDING DIVISION

WESTON MILES
ARCHITECTS
17500 Depot Street, Suite #200
Morgan Hill, CA 95037
1 •408 • 779 • 6686
• Architecture • Landscape •

NOT VALID WITHOUT SIGNATURE

REVISIONS
1 03/28/2019 PLAN REVIEW #2
2
3

WALL TYPES & CURB PLAN

MORGAN HILL LIBRARY ADDITION

CITY OF MORGAN HILL
660 W MAIN AVE, MORGAN HILL, CA 95037

These drawings are instruments of service and are the property of WESTON MILES ARCHITECTS, INC. All designs and other information on the drawings are for use on the specified project and shall not be used otherwise without the expressed written permission of WESTON MILES ARCHITECTS, INC.

Written dimensions on these drawings shall have precedence over scaled dimensions. Contractors shall verify and be responsible for all dimensions and conditions on the job and this office shall be notified of any variations from the dimensions and conditions shown by these drawings. Shop details shall be submitted to this office for approval before proceeding with fabrication.

© Copyrighted 2019

DATE: 02/8/2019

JOB NO: 15058

A7.1

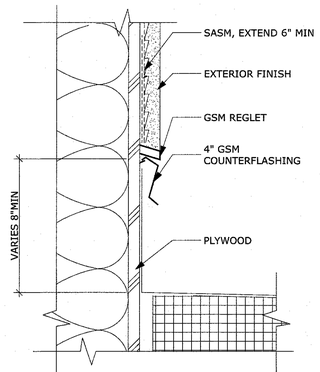

FLASHING @ CMT PLSTR WALL (11)
SCALE: 3" = 1'-0"

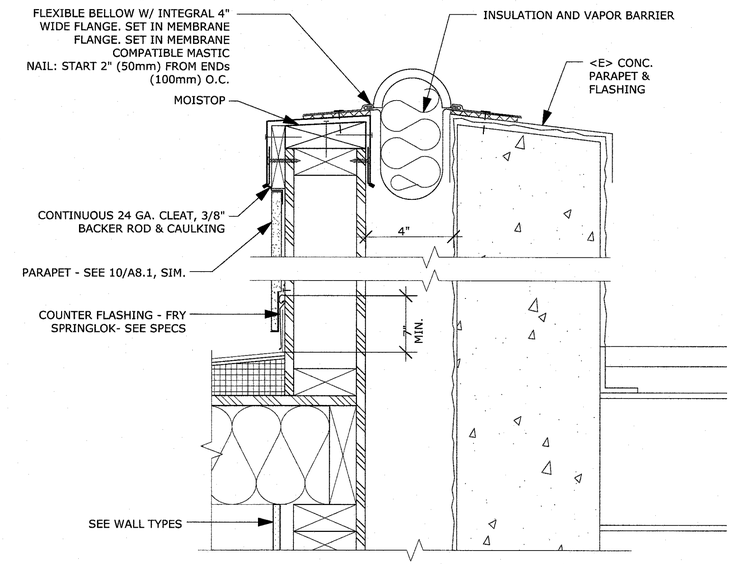

SEISMIC JOINT - PARAPETS (3)
SCALE: 3" = 1'-0"

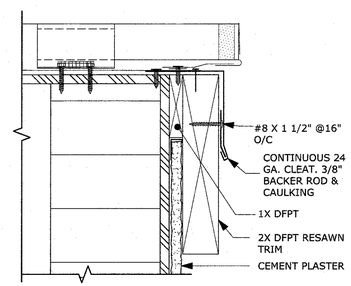

RAKE @ LOW METAL ROOF (10)
SCALE: 3" = 1'-0"

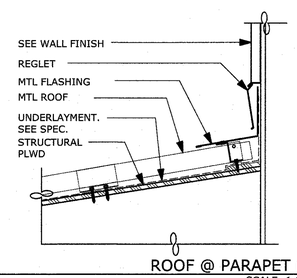

ROOF @ PARAPET (ANGLE) (14)
SCALE: 1 1/2"= 1'-0"

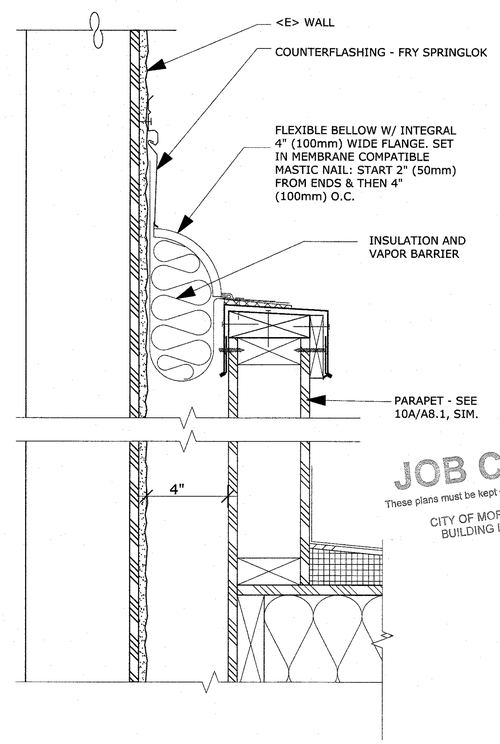

SEISMIC JOINT - FLAT ROOF TO WALL (1)
SCALE: 3" = 1'-0"

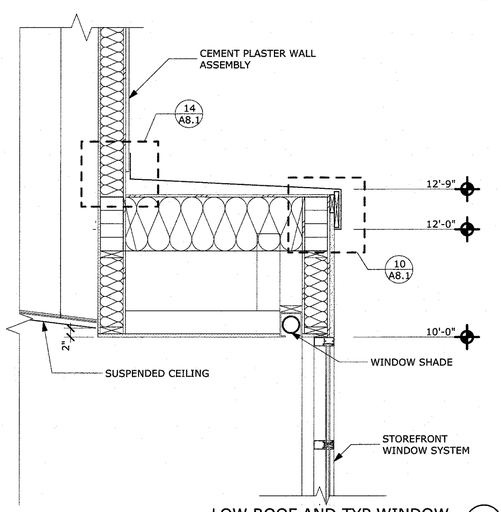

LOW ROOF AND TYP WINDOW (13)
SCALE: 3/4" = 1'-0"

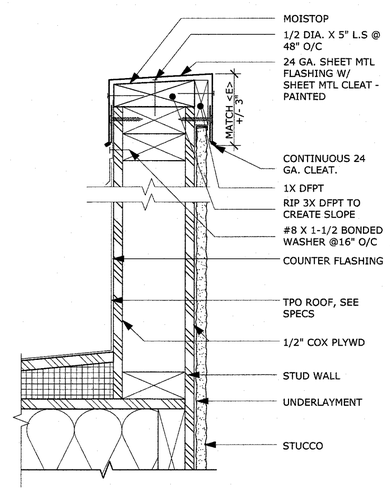

TOP OF PARAPET (10)
SCALE: 3" = 1'-0"

WESTON MILES
ARCHITECTS
17500 Depot Street, Suite #200
Morgan Hill, CA 95037
1 •408 • 779 • 6686
• Architecture • Landscape •

LICENSED ARCHITECT No. C 18,552 RENEWAL 08-31-19 STATE OF CALIFORNIA

NOT VALID WITHOUT SIGNATURE

REVISIONS
1 03/28/2019 PLAN REVIEW #2
2
3

ROOF DETAILS

MORGAN HILL LIBRARY ADDITION

CITY OF MORGAN HILL
660 W MAIN AVE, MORGAN HILL, CA 95037

JOB COPY
These plans must be kept on the job at all times.
CITY OF MORGAN HILL BUILDING DIVISION

These drawings are instruments of service and are the property of WESTON MILES ARCHITECTS, INC. All designs and other information on the drawings are for use on the specified project and shall not be used otherwise without the expressed written permission of WESTON MILES ARCHITECTS, INC.

Written dimensions on these drawings shall have precedence over scaled dimensions. Contractors shall verify and be responsible for all dimensions and conditions on the job and this office shall be notified of any variations from the dimensions and conditions shown by these drawings. Shop details shall be submitted to this office for approval before proceeding with fabrication.

© Copyrighted 2019

DATE: 02/8/2019

JOB NO: 15058

A8.1

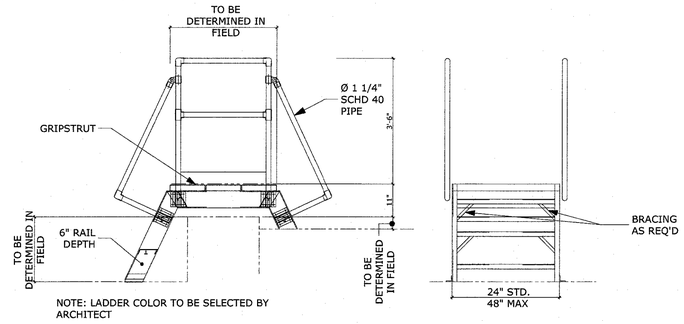

ROOF LADDER 19
SCALE: 1/2" = 1'-0"

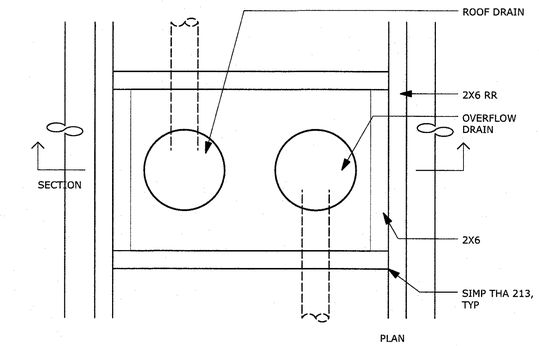

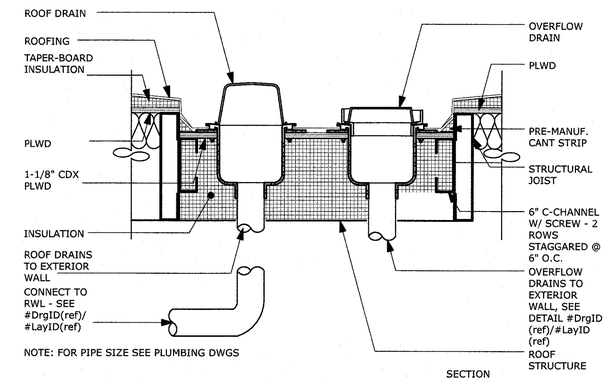

ROOF DRAIN 3
SCALE: 1 1/2"= 1'-0"

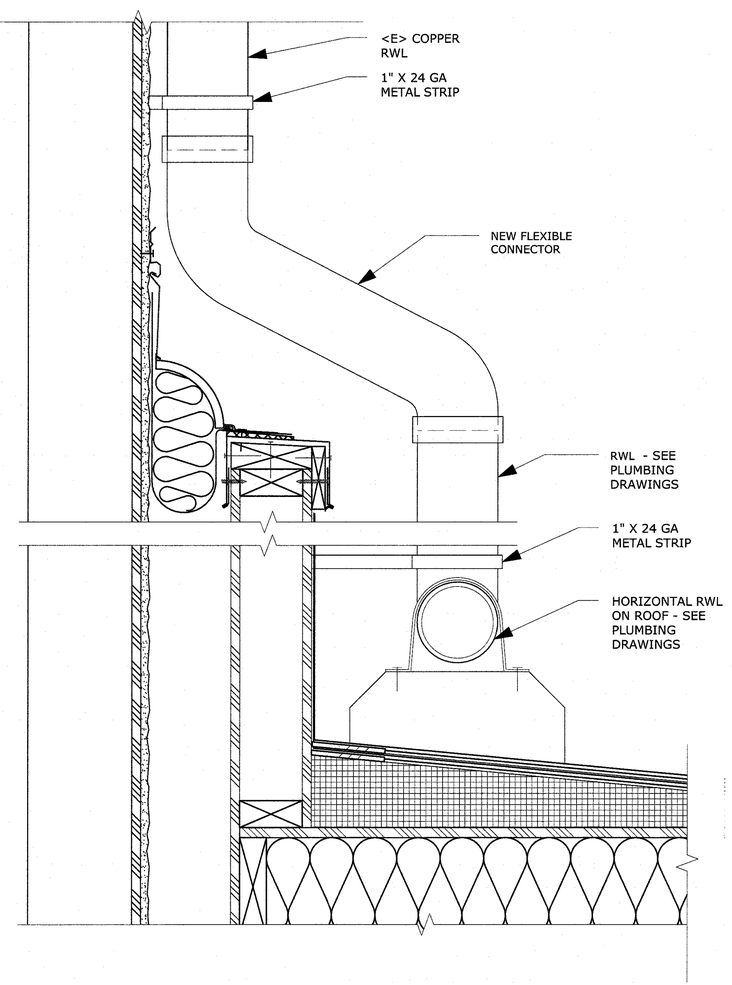

<E> RWL TO (N) RWL 9
SCALE: 3" = 1'-0"

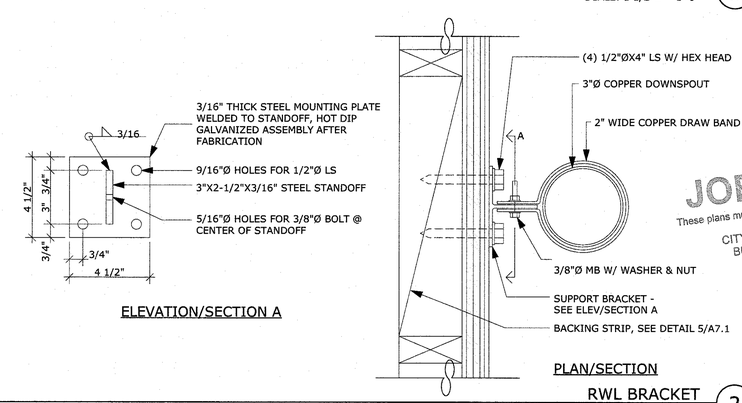

RWL BRACKET 2
SCALE: 3" = 1'-0"

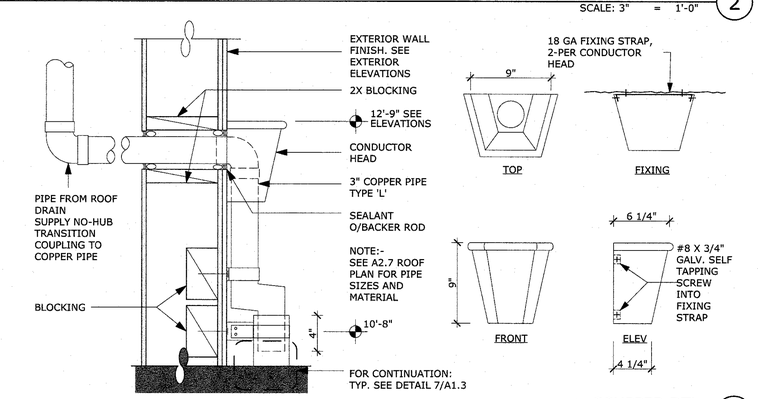

SCUPPER DTL 1
SCALE: 1 1/2"= 1'-0"

WESTON MILES
ARCHITECTS
17500 Depot Street, Suite #200
Morgan Hill, CA 95037
1 •408 • 779 • 6686
• Architecture • Landscape •

REGISTERED ARCHITECT
No. C 18,552
STATE OF CALIFORNIA
NOT VALID WITHOUT SIGNATURE

REVISIONS
1 03/28/2019 PLAN REVIEW #2
2
3

JOB COPY
These plans must be kept on the job at all times.
CITY OF MORGAN HILL
BUILDING DIVISION

ROOF DETAILS

MORGAN HILL LIBRARY ADDITION

CITY OF MORGAN HILL
660 W MAIN AVE, MORGAN HILL, CA 95037

These drawings are instruments of service and are the property of WESTON MILES ARCHITECTS, INC. All designs and other information on the drawings are for use on the specified project and shall not be used otherwise without the expressed written permission of WESTON MILES ARCHITECTS, INC.

Written dimensions on these drawings shall have precedence over scaled dimensions. Contractors shall verify and be responsible for all dimensions and conditions on the job and this office shall be notified of any variations from the dimensions and conditions shown by these drawings. Shop details shall be submitted to this office for approval before proceeding with fabrication.

© Copyrighted 2019

DATE: 02/8/2019

JOB NO: 15058

A8.2

1. CEILING SYSTEM GENERAL NOTES:

1.01 Ceiling system components shall comply with ASTM C635-07 and Section 5.1 of ASTM E580-10a.

1.02 The ceiling grid system must be rated heavy duty as defined by ASTM C635-08.

1.03 Ceiling systems. The following ceiling system(s) is/are part of the scope of this project: ***[For each system used, the RDP shall indicate in the construction documents, the information that follows]***

Manufacturer's Name ARMSTRONG
Product Evaluation Report Type and Number ICC-ES (ESR-1308)
Manufacturer's Model Number - main runner 7301 - HEAVY DUTY MAIN BEAM
Manufacturer's catalog number - cross runner XL7328 CROSS TEE

1.04 Seismic Wall Clip:

Manufacturer's Model NOT USED

1.05 Ceiling panels shall not support any light fixtures, air terminals or devices.

1.06 For ceiling installations utilizing acoustical tile panels of mineral or glass fiber, it is not mandatory to provide ¾" clearance between the acoustical tile panels and the wall on the sides of the ceiling which are free to slip. For all other ceiling panel types, provide ¾" clearance between the ceiling panel and the wall on the sides of the ceiling free to slip.

2. MATERIALS:

2.01 Ceiling wire shall be Class 1 zinc coated (galvanized) carbon steel conforming to ASTM A641-09a. Wire shall be #12 gage (0.106" diameter) with soft temper and minimum tensile strength = 70 ksi.

2.02 Galvanized sheet steel (including that used for metal stud and track compression struts/post) shall conform to ASTM A653-11, or other equivalent sheet steel listed in Section A2.1 of the North American Specification for the Design of Cold-Formed Steel Structural Members 2007, including supplement 2 dated 2010 (AISI S100-07/S2-10). Material 43 mil (18 gage) and lighter shall have minimum yield strength of 33 ksi. Material 54 mil (16 gage) and heavier shall have a minimum yield strength of 50 ksi.

2.03 Electrical metallic tube (EMT) shall be ANSI C80.3/UL 797 carbon steel with G90 galvanizing. EMT shall have minimum yield strength (Fy) of 30 ksi and minimum ultimate strength (Fu) of 48 ksi.

3. ATTACHMENT OF HANGER AND BRACING WIRES:

3.01 Separate all ceiling hanger and bracing wires at least six (6) inches from all unbraced ducts, pipes, conduit, etc.

3.02 Hanger and bracing wires shall not attach to or bend around obstructions including but not limited to: piping, ductwork, conduit and equipment.

3.03 Hanger wires that are more than one (horizontal) in six (vertical) out of plumb shall have counter-sloping wires.

3.04 Slack safety wires shall be considered hanger wires for installation and testing requirements.

3.05 Hanger and bracing wire anchorage to the structure shall be installed in such a manner that the direction of the anchorage aligns closely with the direction of the wire. (e.g. bracing wire ceiling clips must be bent as shown in the details and rotated as required to align closely with the direction of the wire, screw eyes in wood must be installed so they align closely with the direction of the wire, etc.)

4. FASTENERS AND WELDING:

4.01 Sheet metal screws shall comply with ASTM C1513-10, ASME B18.6.4-89 (R2005). Penetration of screws through joined material shall not be less than three exposed threads.

5. TESTING: All field testing must be performed in the presence of the project inspector.

5.01 Post-installed anchors in concrete used to support hanger wires shall be tested at a frequency of 10 percent. Power actuated fasteners in concrete shall be field tested for 200 lbs. in tension. All other post-installed anchors in concrete shall be tested in accordance with CBC Section 1913A.7.

5.02 Post-installed anchors in concrete used to attach bracing wires shall be tested at a frequency of 50 percent in accordance with CBC Section 1913A.7.

6. LIGHT FIXTURES:

6.01 All light fixtures shall be positively attached to the ceiling suspension systems by mechanical means to resist a horizontal force equal to the weight of the fixture. A minimum of two screws or approved fasteners are required at each light fixture, per ASTM E580, Section 5.3.1.

6.02 Surface-mounted light fixtures shall be attached to the main runner with at least two positive clamping devices. The clamping device shall completely surround the supporting ceiling runner and be made of steel with a minimum thickness of #14 gage. Rotational spring catches do not comply. A #12 gage slack safety wire shall be connected from each clamping device to the structure above. Provide additional supports when light fixtures are eight (8) feet or longer or exceed 56 lb. Maximum spacing between supports shall not exceed eight (8) feet.

6.03 Light fixtures weighing less than or equal to 10 lb. shall have a minimum of one (1) #12 gage slack safety wire connected from the fixture housing to the structure above.

6.05 Light fixtures weighing greater than 10 lb. but less than or equal to 56 lbs. may be supported directly on the ceiling runners, but they shall have a minimum of two (2) #12 gage slack safety wires connected from the fixture housing at diagonal corners to the structure above.

Exception: All light fixtures greater than two by four feet weighing less than 56 lbs. shall have a #12 gage slack safety wire at each corner.

6.06 All Light fixtures weighing greater than 56 lb. shall be independently supported by not less than four (4) taut #12 gage hanger wires (one at each corner) attached from the fixture housing to the structure above or other approved hangers. The four (4) taut #12 gage wires or other approved hangers, including their attachment to the structure above, shall be capable of supporting four (4) times the weight of the fixture.

7. SERVICES WITHIN THE CEILING:

7.01 All flexible sprinkler hose fitting mounting brackets, ceiling-mounted air terminals or other services shall be positively attached to the ceiling suspension systems by mechanical means. Screws or approved fasteners are required. A minimum of two attachments are required at each component.

7.02 Ceiling-mounted air terminals or other services weighing less than or equal to 20 lb. shall have one (1) #12 gage slack safety wire attached from the terminal or service to the structure above.

7.03 Flexible sprinkler hose fittings, ceiling-mounted air terminals or other services weighing more than 20 lb. but less than or equal to 56 lb. shall have two (2) #12 gage slack safety wires (at diagonal corners) connected from the terminal or service to the structure above.

7.04 Flexible sprinkler hose fittings, ceiling-mounted air terminals or other services weighing more than 56 lb. shall be supported directly from the structure above by not less than four (4) taut #12 gage hanger wires attached from the terminal or service to the structure above or other approved hangers.

8. OTHER DEVICES WITHIN THE CEILING:

8.01 All lightweight miscellaneous devices, such as strobe lights, occupancy sensors, speakers, exit signs, etc., shall be attached to the ceiling grid. In addition, devices weighing more than 10 lbs. shall have a #12 gage slack safety wire anchored to the structure above. Devices weighing more than 20 lb. shall be supported independently from the structure above.

TABLE 3.21 - COMPRESSION STRUT TABLE
PER DSA IR 25-2.13

CHANNEL COMPRESSION STRUT	MAXIMUM LENGTH
250S125-33	5'-0"
250S137-33	6'-10"
362S137-33	8'-0"
250137-43	8'-10"
400S137-43	10'-10"

TABLE 4.11 - HANGER AND BRACING WIRE CONNECTION MATRIX
PER DSA IR 25-2.13

STRUCUTRAL CONDITION OF FLOOR/ROOF ABOVE SUSPENDED CEILING	APPLICABLE HANGER WIRE DETAIL	APPLICABLE BRACING WIRE DETAIL
SAWN TIMBER	1/A9.1.2 (4.25) 2/A9.1.2 (4.29)	3/A9.1.2 (4.35)

TABLE 5.10 - COMPRESSION STRUT CONNECTION TO STRUCTURE - CONNECTION MATRIX

PER DSA IR 25-2.13

STRUCUTRAL CONDITION OF FLOOR/ROOF ABOVE COMPRESSION STRUT	APPLICABLE DETAIL
SAWN TIMBER WITH GYPSUM BOARD	4/A9.1.2 (5.50)
SAWN TIMBER WITHOUT GYPSUM BOARD	5/A9.1.2 (5.60)

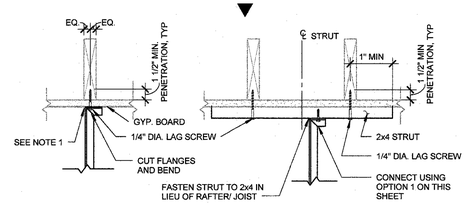

OPTION 1 OPTION 2

CHANNEL STRUT

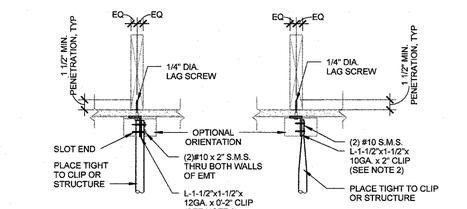

OPTION 1 OPTION 2

TUBE STRUT

NOTES:

1. WEB OF CHANNEL TO BEAR WITHIN WIDTH OF THE WOOD MEMBER.
2. FOR ANGLE ORIENTED IN THE STANDARD POSITION, VERTICAL LEG TO FALL WITHIN THE WIDTH OF THE WOOD MEMBER.

STRUT CONNECTION @ SAWN TIMBER WITH GYP BRD (5.50)
SCALE: 1' = 1'-0"

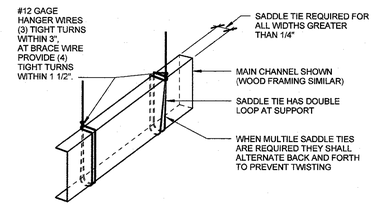

TYPICAL SADDLE TIE DETAIL

HANGER WIRE CONDITION SHOWN. BRACE WIRE CONDITION SIMILAR

SADDLE TIE DETAIL (4.29)
SCALE: 1' = 1'-0"

ATTACHED JOINT FREE JOINT

NOTES:

1. PROVIDE #12 GAGE HANGER WIRES AT THE ENDS OF ALL MAIN AND CROSS RUNNERS WITHIN EIGHT (8) INCHES OF THE SUPPORT OR WITHIN ONE-FOURTH (1/4) OF THE LENGTH OF THE END TEE, WHICHEVER IS LESS, FOR THE PERIMETER OF THE CEILING AREA. PERIMETER WIRES ARE NOT REQUIRED WHEN THE LENGTH OF THE END TEE IS EIGHT (8) INCHES OR LESS.
2. NAILS AT ENDS OF HORIZONTAL STABILIZERS ARE TO BE PLACED WITH NAIL HEAD TOWARD CENTER LINE OF SPAN OF STRUT.
3. STABILIZER BAR MAY BE SLOTTED APPROVED ANGLES OR CHANNELS WITH "DIAMOND POINTS" OF SPRING STEEL WHICH SNAP TIGHT TO PREVENT MOVEMENT OF STRUT.
4. (1) #10 SMS TO 20 GA. MIN. WALL STUD @ 24" O.C.

APPROVED STABILIZER
(SEE NOTE 3)

CEILING PERIMETER (2.60)
SCALE: 1' = 1'-0"

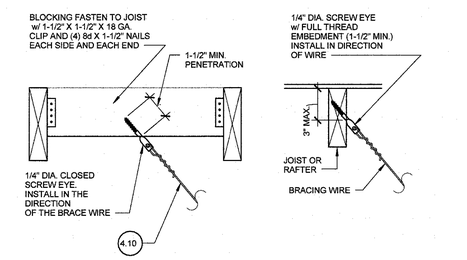

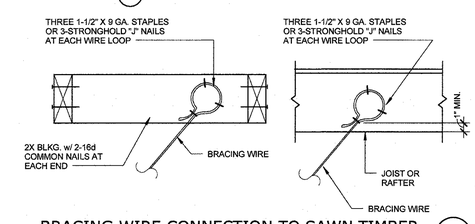

BRACING WIRE CONNECTION TO SAWN TIMBER (4.35)
SCALE: 1' = 1'-0"

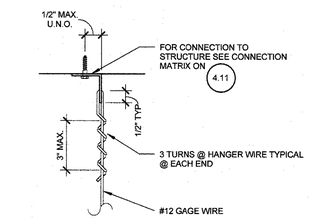

HANGER WIRE

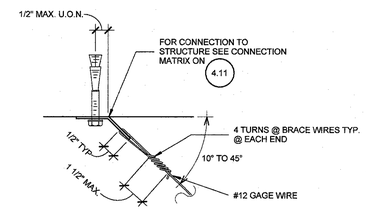

BRACING WIRE

HANGER AND BRACING WIRE CONNECTION (4.10)
SCALE: 1' = 1'-0"

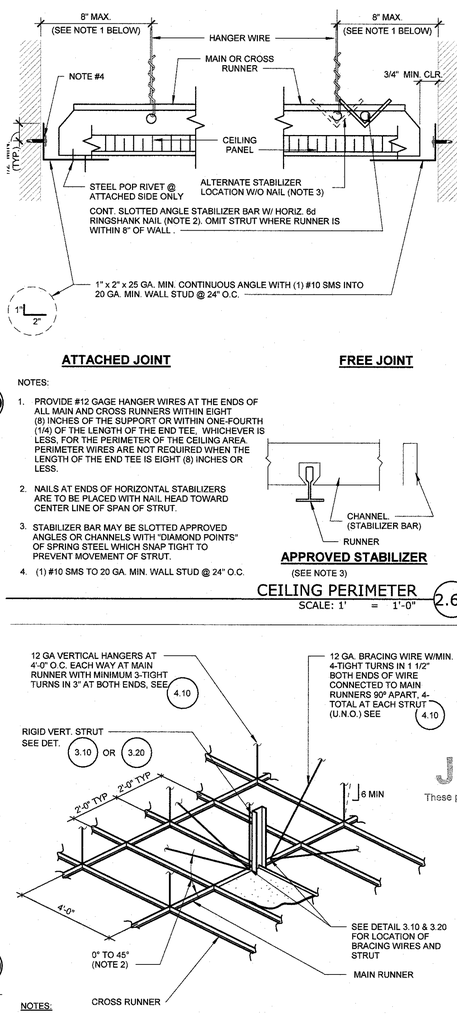

NOTES:

1. STRUTS SHALL NOT REPLACE HANGER WIRES.
2. THE MINIMUM ACCEPTABLE ANGLE IS DETERMINED SUCH THAT THE WIRES DO NOT INTERFERE WITH THE RUNNERS, LIGHT FIXTURES, ETC. AND REMAIN STRAIGHT AND UNOBSTRUCTED.

SUSPENSION AND BRACING ASSEMBLY (2.35)
SCALE: 1' = 1'-0"

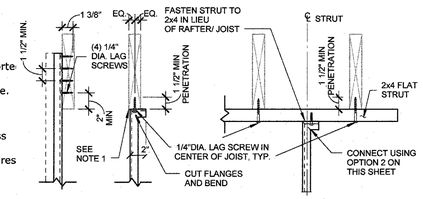

OPTION 1 OPTION 2 OPTION 3

CHANNEL STRUT

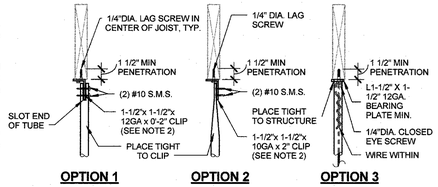

OPTION 1 OPTION 2 OPTION 3

TUBE STRUT

NOTES:

1. WEB OF CHANNEL TO BEAR WITHIN WIDTH OF WOOD MEMBER.
2. VERTICAL LEG OF MEMBER TO FALL WITHIN THE WIDTH OF THE WOOD MEMBER.
3. SEE PAGE 5.50 FOR ADDITIONAL INFORMATION.

STRUT CONNECTION TO SAWN TIMBER (5.60)
SCALE: 1' = 1'-0"

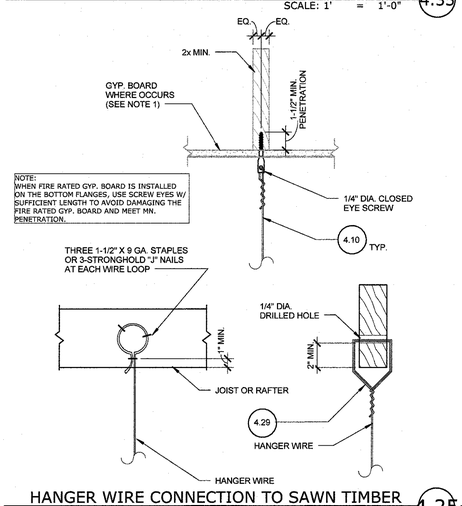

HANGER WIRE CONNECTION TO SAWN TIMBER (4.25)
SCALE: 1' = 1'-0"

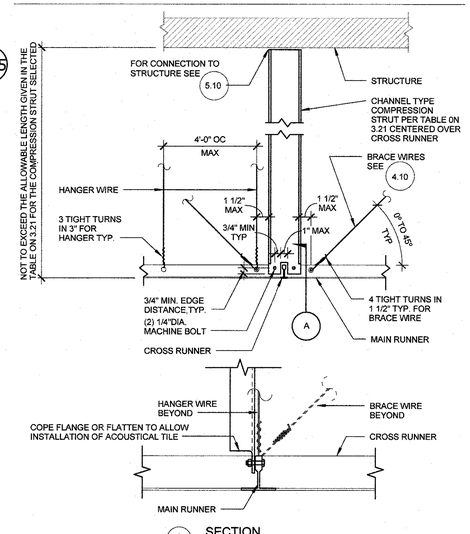

(A) SECTION
3" = 1'-0"

CHANNEL TYPE STRUT (3.10)
SCALE: 1' = 1'-0"

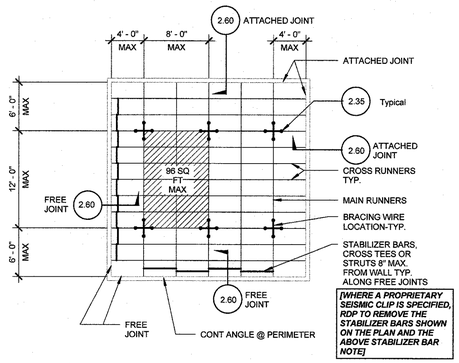

[WHERE A PROPRIETARY SEISMIC CLIP IS SPECIFIED, RDP TO REMOVE THE STABILIZER BARS SHOWN ON THE PLAN AND THE ABOVE STABILIZER BAR NOTE]

NOTE:

BRACING WIRES AND COMP. STRUT SHALL OCCUR AT EVERY 96 SQ. FT. MAX. IN ROOMS OVER 144 SQ. FT.

TYPICAL CEILING PLAN (2.11)
SCALE: 1' = 1'-0"

WESTON MILES
ARCHITECTS
17500 Depot Street, Suite #200
Morgan Hill, CA 95037
1 •408 • 779 • 6686
• Architecture • Landscape •

NOT VALID WITHOUT SIGNATURE

REVISIONS
1 03/28/2019 PLAN REVIEW #2
2
3

JOB COPY
These plans must be kept on the job at all times.
CITY OF MORGAN HILL BUILDING DIVISION

T-BAR CEILING DETAILS

MORGAN HILL LIBRARY ADDITION

CITY OF MORGAN HILL
660 W MAIN AVE, MORGAN HILL, CA 95037

These drawings are instruments of service and are the property of WESTON MILES ARCHITECTS, INC. All designs and other information on the drawings are for use on the specified project and shall not be used otherwise without the expressed written permission of WESTON MILES ARCHITECTS, INC.

Written dimensions on these drawings shall have precedence over scaled dimensions. Contractors shall verify and be responsible for all dimensions and conditions on the job and WESTON MILES ARCHITECTS must be informed of any dimensions and conditions shown by these drawings. Shop details shall be submitted to this office for approval before proceeding with fabrication.

© Copyrighted 2019

DATE: 02/8/2019

JOB NO: 15058

A9.1

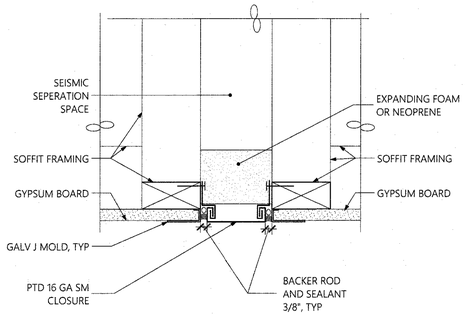

SEISMIC CLOSURE 11
SCALE: 3" = 1'-0"

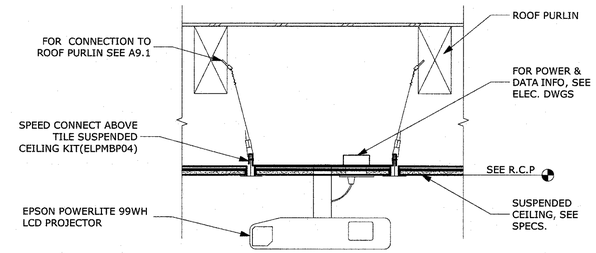

PROJECTOR 3
SCALE: 1" = 1'-0"

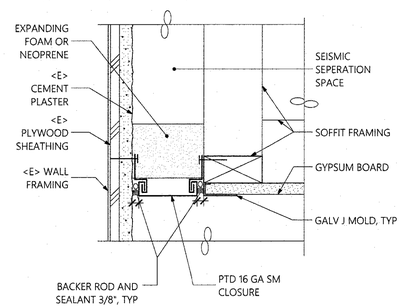

SEISMIC CLOSURE 10
SCALE: 3" = 1'-0"

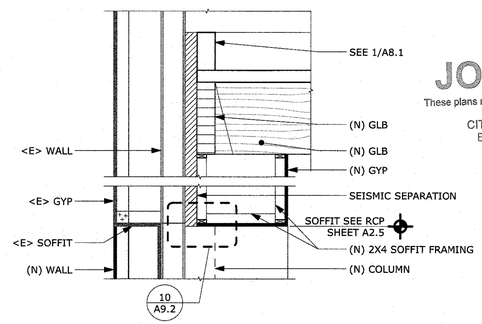

SOFFIT FRAMING 2
SCALE: 1/2" = 1'-0"

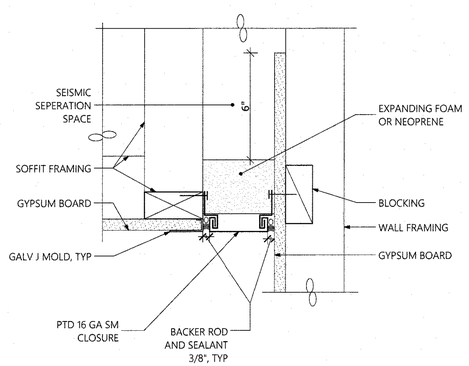

SEISMIC CLOSURE 9
SCALE: 3" = 1'-0"

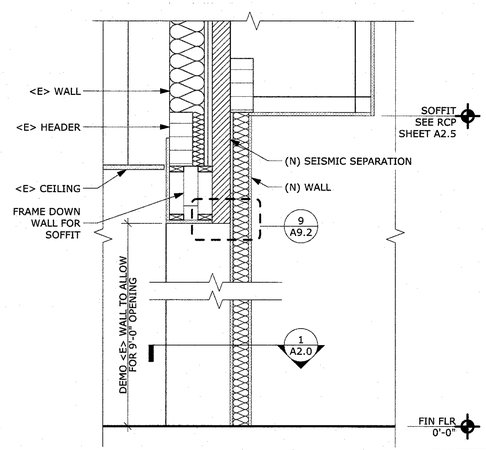

SOFFIT FRAMING 1
SCALE: 3/4" = 1'-0"

JOB COPY
These plans must be kept on the job at all times.
CITY OF MORGAN HILL
BUILDING DIVISION

WESTON MILES
ARCHITECTS
17500 Depot Street, Suite #200
Morgan Hill, CA 95037
1 •408 • 779 • 6686
• Architecture • Landscape •

REGISTERED ARCHITECT
No. C 18,552
EXPIRES 12-31-19
STATE OF CALIFORNIA
NOT VALID WITHOUT SIGNATURE

REVISIONS
1 03/28/2019 PLAN REVIEW #2
2
3

CEILING DETAILS

MORGAN HILL LIBRARY ADDITION

CITY OF MORGAN HILL
660 W MAIN AVE, MORGAN HILL, CA 95037

These drawings are instruments of service and are the property of WESTON MILES ARCHITECTS, INC. All designs and other information on the drawings are for use on the specified project and shall not be used otherwise without the expressed written permission of WESTON MILES ARCHITECTS, INC.

Written dimensions on these drawings shall have precedence over scaled dimensions. Contractors shall verify and be responsible for all dimensions and conditions on the job and the Architect must be informed of any variation from the dimensions and conditions shown by these drawings. Shop details shall be submitted to this office for approval before proceeding with fabrication.

© Copyright(s) 2019

DATE: 02/8/2019

JOB NO: 15058

A9.2

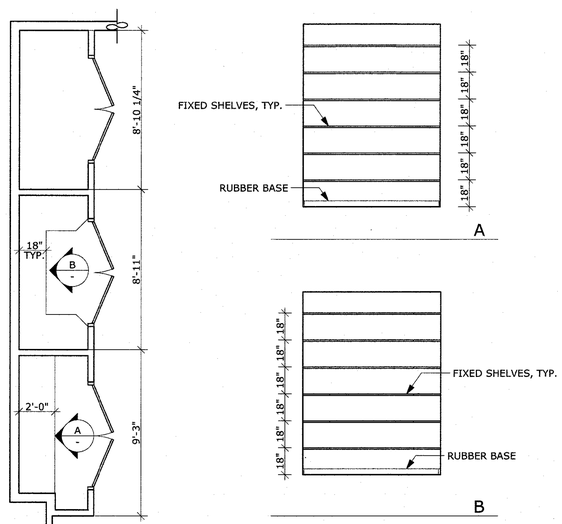

MULTIPURPOSE CLOSETS (19)
SCALE: 1/4" = 1'-0"

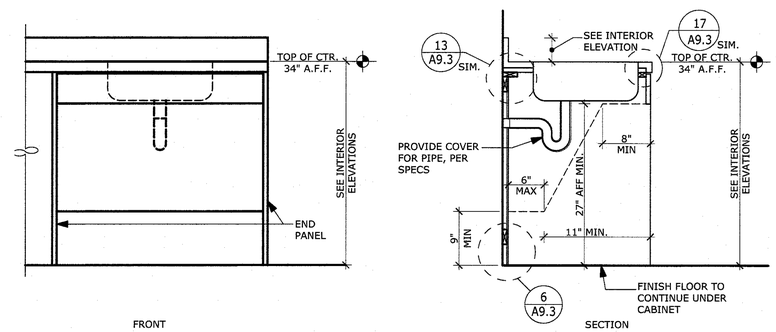

ACCESSIBLE SINK CABINET (7)
SCALE: 1" = 1'-0"

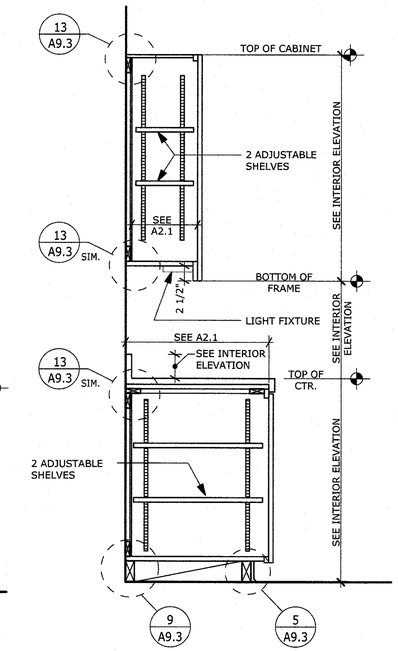

TYP. WALL & BASE CABINET (3)
SCALE: 1" = 1'-0"

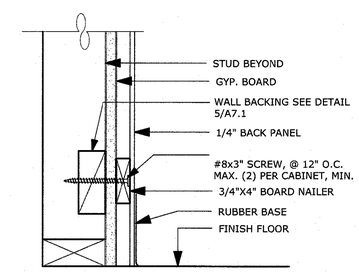

ADA SINK CABINET @ RUBBER BASE (6)
SCALE: 3" = 1'-0"

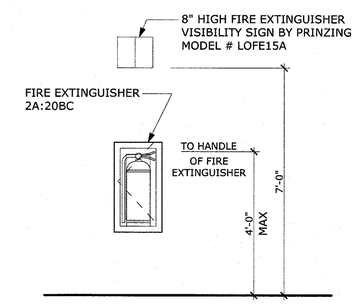

NOTE:
1. HANDLE TO BE U-SHAPED WIRE PULL OR SIMILAR.

2. CABINET NOT TO PROTRUDE HORIZONTALLY INTO CIRULATION PATH MORE THAN 4"

EXTINGUISHER CABINET (2)
SCALE: 1/2" = 1'-0"

GENERAL NOTES

1. ALL CABINETS TO BE PLASTIC LAMINATE WITH 4" TOE KICK.
2. ALL COUNTERTOP TO BE SOLID SURFACE WITH A 4" BACKSPLASH.
3. ALL CABINETRY TO BE EQUIPPED WITH LOCKS

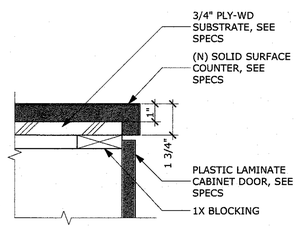

CABINET TOP ANCHOR (17)
SCALE: 3" = 1'-0"

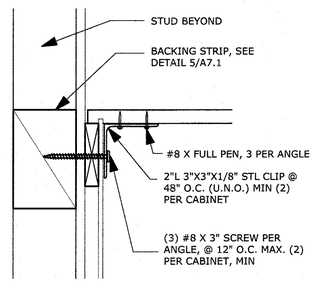

CABINET TOP ANCHOR (13)
SCALE: 3" = 1'-0"

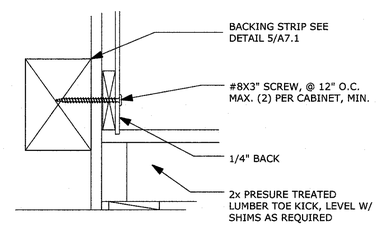

CABINET WALL ANCHOR (9)
SCALE: 3" = 1'-0"

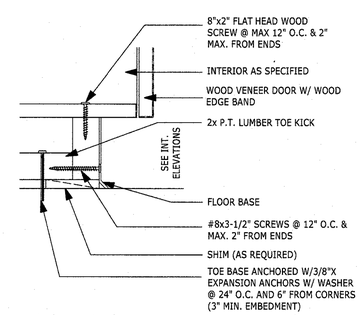

CABINET FLOOR ANCHOR (5)
SCALE: 3" = 1'-0"

WESTON MILES
ARCHITECTS
17500 Depot Street, Suite #200
Morgan Hill, CA 95037
1 •408 • 779 • 6686
• Architecture • Landscape •

LICENSED ARCHITECT
No. C 18,552
RENEWAL 01-31-19
STATE OF CALIFORNIA
NOT VALID WITHOUT SIGNATURE

REVISIONS
1 03/28/2019 PLAN REVIEW #2
2
3

CABINET DETAILS

MORGAN HILL LIBRARY ADDITION

CITY OF MORGAN HILL
660 W MAIN AVE, MORGAN HILL, CA 95037

These drawings are instruments of service and are the property of WESTON MILES ARCHITECTS, INC. All designs shown on these drawings are intended for use on the specified project and shall not be used otherwise without the expressed written permission of WESTON MILES ARCHITECTS, INC.

Written dimensions on these drawings shall have precedence over scaled dimensions. Contractors shall verify and be responsible for all dimensions and conditions on the job and this office shall be notified of any variations from the dimensions and conditions shown by these drawings. Shop details shall be submitted to this office for approval before proceeding with fabrication.

© Copyrighted 2019

DATE: 02/8/2019

JOB NO: 15058

A9.3

JOB COPY
These plans must be kept on the job at all times.
CITY OF MORGAN HILL
BUILDING DIVISION

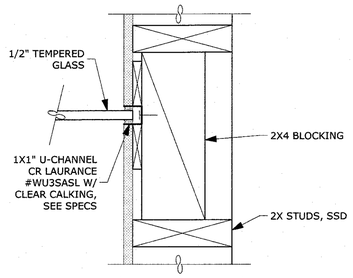

RECESSED U-CHANNEL @ WALL 16
SCALE: 3" = 1'-0"

NOTE:
1. PROVIDE DOOR IDENTIFICATION SIGNAGE ON WALL ADJACENT TO THE LATCH SIDE OF THE DOOR W/BRAILLE 11B-703.3, PROPORTIONS 11B-703.2.4, CONTRAST (NON-RAISED CHARACTERS) 11B-703.5.1, RAISED CHARACTERS 11B-703.2 AND PICTOGRAMS 11B-703.6
3. INSTALLATION HEIGHT AND LOCATION PER 11B703.4, SEE DETAIL 2/A9.4, U.N.O. WHERE THERE IS NO WALL SPACE ON THE LATCH SIDE INCLUDING DOUBLE LEAF DOORS, SIGNS SHALL BE PLACED ON THE NEAREST ADJACENT WALL, PREFERABLY ON THE RIGHT.
5. RAISED CHARACTERS - SHALL COMPLY WITH 11B-703.2 AND SHALL BE DUPLICATED IN BRAILLE COMPLYING WITH 11B-703.3. CHARACTER HEIGHT 5/8" MIN TO 2' MAX. RAISED 1/32" ABOVE BACKGROUND, UPPERCASE, SANS SERIF. CHARACTERS CANNOT BE ITALIC, OBLIQUE, SCRIPT, HIGHLY DECORATIVE, OR OTHER UNUSUAL FORMS.
4. BRAILLE SPECIFICATION PER 11B-703.3:
TO BE CALIFORNIA CONTRACTED GRADE 2 BRAILLE SHALL BE USED WHERE BRAILLE SYMBOLS ARE SPECIFICALLY REQUIRED IN OTHER PORTION OF THESE STANDARDS. DOTS SHALL BE 1/10 IN (2.5mm) ON CENTER IN SAME CELL, W/ 3/10 IN. (7.6mm) SPACE BETWEEN CORRESPONDING DOTS IN ADJACENT CELL. DOTS SHALL BE RAISED A 0.025" (0.6mm) TO 0.037" (0.9mm) ABOVE THE BACKGROUND. DOMES SHALL BE DOMED OR ROUNDED.
6. ALL SIGNS TO BE 1/4" THK. ACRYLIC PLASTIC.
7. ANCHOR SIGN TO WALL W/EXPOSED TAMPER RESISTANT SCREWS.
8. SEE SPECIFICATIONS FOR SIGN TYPE AND LOCATION.
9. ALL CHARACTERS AND BACKGROUNDS OF ALL SIGNS SHALL HAVE A NON-GLARE FINISH.
10. CHARACTERS ON ALL SIGNS SHALL CONTRAST 70% W/THEIR BACKGROUND.
11. SIGNS TO HAVE COLOR WHICH CONTRASTS W/SURFACE TO WHICH THEY ARE MOUNTED.
12. NAME OF ROOM SHALL ALWAYS BE BELOW ROOM NUMBER, BRAILLE ALWAYS BELOW THE ROOM NAME.
13. FOR SIGNAGE FRAME INSTALLATION, SEE 1A/A9.4 OR 1B/A9.4
14. FOR SIGNAGE MOUNTING HEIGHTS SEE DETAIL 2/A9.4
15. ROOM IDENTIFICATION TEXT TO BE APPROVED BY OWNER PRIOR TO MAKING OF SIGNS.

SIGNAGE NOTES 4
SCALE: 1 1/2"= 1'-0"

WESTON MILES
ARCHITECTS
17500 Depot Street, Suite #200
Morgan Hill, CA 95037
1 •408 • 779 • 6686
• Architecture • Landscape •

NOT VALID WITHOUT SIGNATURE

REVISIONS
1 03/28/2019 PLAN REVIEW #2
2
3

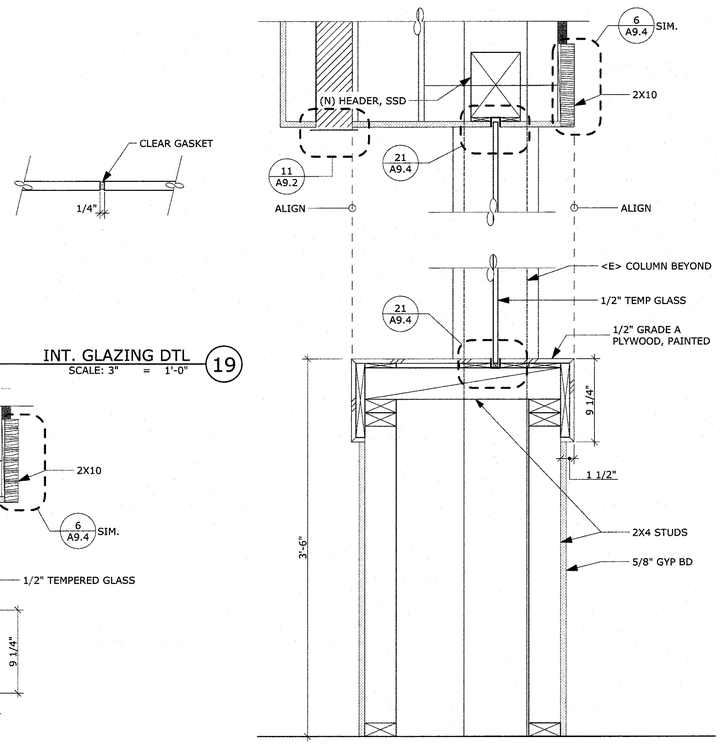

CHILDRENS ENTRY DETAIL 14
SCALE: 1 1/2"= 1'-0"

INT. GLAZING DTL 19
SCALE: 3" = 1'-0"

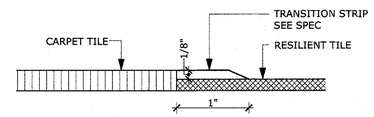

(N) CARPET TO (N) RESILIENT TILE 11
SCALE: 1' = 1'-0"

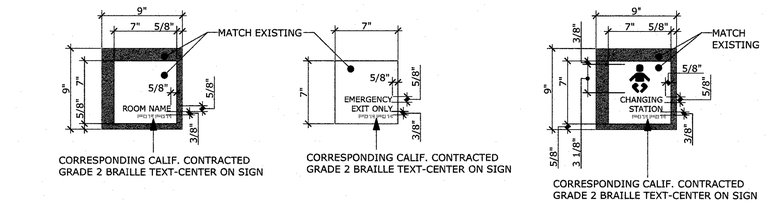

CORRESPONDING CALIF. CONTRACTED GRADE 2 BRAILLE TEXT-CENTER ON SIGN

CORRESPONDING CALIF. CONTRACTED GRADE 2 BRAILLE TEXT-CENTER ON SIGN

CORRESPONDING CALIF. CONTRACTED GRADE 2 BRAILLE TEXT-CENTER ON SIGN

● (A) ROOM IDENTIFICATION

▲ (B) EMERGENCY EXIT ONLY SIGN

© (C) DIAPER CHANGING STATION

GENERAL SIGNAGE 3
SCALE: 1 1/2"= 1'-0"

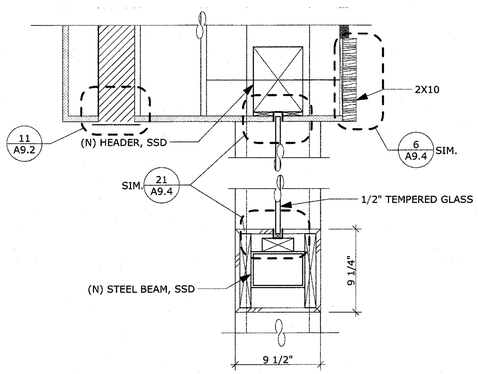

CHILDRENS ENTRY DETAIL 18
SCALE: 1 1/2"= 1'-0"

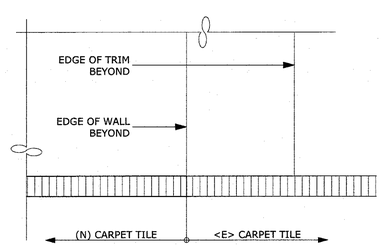

(N) CARPET TO <E> CARPET 10
SCALE: 1' = 1'-0"

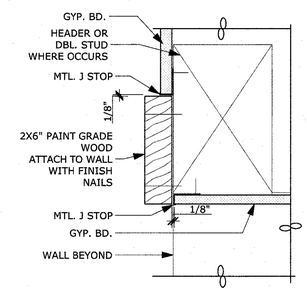

2X6 WOOD TRIM - HEAD/JAMB 6
SCALE: 3" = 1'-0"

JOB COPY
These plans must be kept on the job at all times.
CITY OF MORGAN HILL BUILDING DIVISION

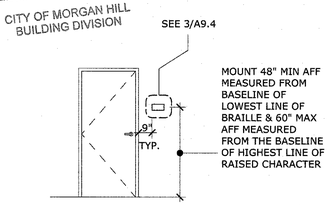

NOTE:
SIGNAGE SHALL FOLLOW INTERNATIONAL SYMBOL OF ACCESSIBILITY SEC. 1117B.5.1, CHAPTER 11B, TITLE 24, CALIFORNIA CODE.

GENERAL DOOR SIGNAGE 2
SCALE: 1/4" = 1'-0"

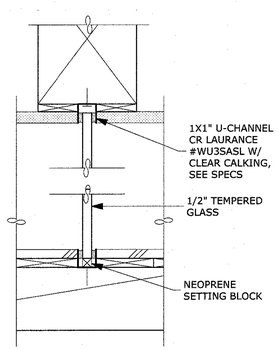

RECESSED U-CHANNEL @ SHELF 21
SCALE: 3" = 1'-0"

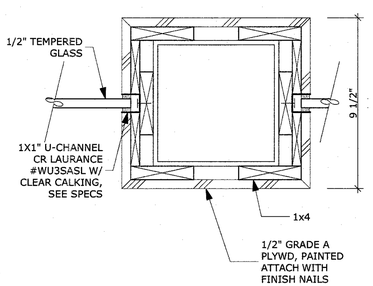

RECESSED U-CHANNEL @ COLUMN 17
SCALE: 3" = 1'-0"

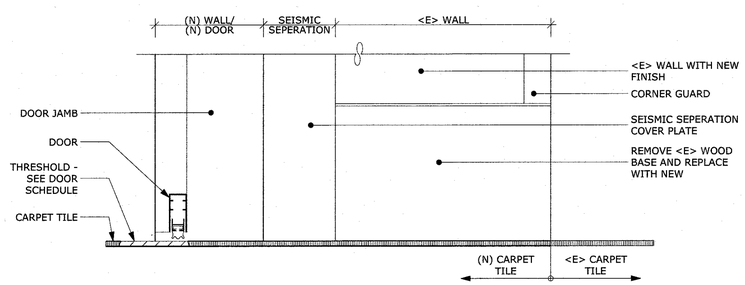

FLOOR TRANSITION 9
SCALE: 3" = 1'-0"

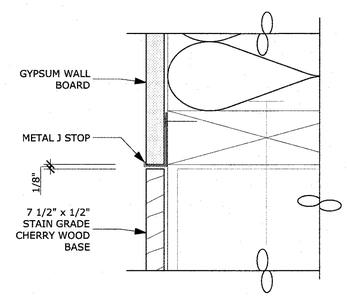

WOOD BASE 5
SCALE: 6" = 1'-0"

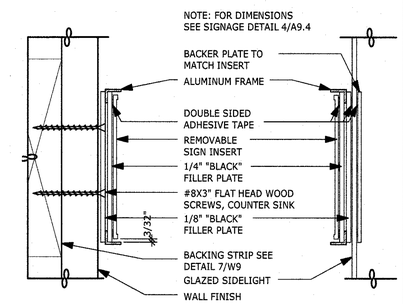

(A) WALL MOUNTED

(B) GLASS MOUNTED

GENERAL SIGNAGE FRAME 1
SCALE: 6" = 1'-0"

SIGNAGE & MISC DETAILS

MORGAN HILL LIBRARY ADDITION

CITY OF MORGAN HILL
660 W MAIN AVE, MORGAN HILL, CA 95037

These drawings are instruments of service and are the property of WESTON MILES ARCHITECTS, INC. All designs and other information on the drawings are for use on the specified project and shall not be used otherwise without the expressed written permission of WESTON MILES ARCHITECTS, INC.

Written dimensions on these drawings shall take precedence over scaled dimensions. Contractors shall verify and be responsible for all dimensions and conditions on the job and this office shall be notified of any variations from the dimensions and conditions shown by these drawings. Shop details shall be submitted to this office for approval before proceeding with fabrication.

© Copyrighted 2019

DATE: 02/8/2019

JOB NO: 15058

A9.4

MATERIAL SPECIFICATIONS

STRUCTURAL SHEATHING
STRUCTURAL SHEATHING SHALL BE PLYWOOD UNLESS OTHERWISE NOTED BELOW. EACH PANEL SHALL BE IDENTIFIED WITH THE APPROPRIATE TRADEMARK OF APA AND SHALL MEET THE REQUIREMENTS OF THE LATEST EDITION OF VOLUNTARY PRODUCT STANDARD PS-1, VOLUNTARY PRODUCT STANDARD PS-2 OR APA PRP-108 PERFORMANCE STANDARDS.

ROOF SHEATHING
- SHALL BE 5/8" APA RATED SHEATHING, EXPOSURE 1, SPAN RATING 32/16. (PLYWOOD @ LOW SLOPE ROOFS. OSB @ PITCHED ROOFS WITH 4:12 OR GREATER SLOPE)

WALL SHEATHING
- SHALL BE 15/32" APA RATED SHEATHING, EXPOSURE 1, SPAN RATING 32/16 (4-PLY).
- SHALL BE 15/32" APA STRUCTURAL 1 RATED SHEATHING. EXPOSURE 1, SPAN RATING 32/16 (4-PLY), WHERE NOTED ON DRAWINGS AS REQUIRING STRUCTURAL 1 SHEATHING.
- (USE PLYWOOD @ WALLS THAT WILL RECEIVE WATERPROOFING/BUILDING ENVELOPE MEMBRANE, OR EXTERIOR WALLS COVERED IN PAPER AND STUCCO)
- (USE OSB @ INTERIOR WALL)

ALL WOOD STRUCTURAL PANELS PERMANENTLY EXPOSE TO WEATHER SHALL BE EXTERIOR VS EXPOSURE 1 AS REFERENCED ABOVE.

ALL UNBLOCKED ROOF AND FLOOR SHEATHING EDGES SHALL BE TONGUE-AND-GROOVE. AS AN ALTERNATIVE, UNBLOCKED ROOF SHEATHING MAYBE SUPPORTED WITH PLYWOOD CLEATS OR EDGE CLIPS.

PLYWOOD ADHESIVES ADHESIVES
SHALL CONFORM TO APA SPECIFICATION AFG-01, APPLIED IN ACCORDANCE WITH THE MANUFACTURER'S RECOMMENDATIONS. IF OSB PANELS WITH SEALED SURFACES AND EDGES ARE USED, GLUE SHALL BE SOLVENT-BASED.

FRAMING
DOUGLAS FIR COAST REGION, CONFORMING TO WEST COAST LUMBER INSPECTION BUREAU STANDARD GRADING AND DRESSING RULE NO. 17 AS AMENDED TO DATE.

1. 2x, 3x, 4x JOISTS AND BEAMS, NO. 2, 123-C, UNLESS NOTED OTHERWISE ON THE DRAWINGS.
2. 6x & LARGER BEAMS, DENSE NO. 1, PARA. 130-BB
3. 2x, 3x, 4x LEDGERS AND RAFTERS, NO. 2 PARA. 123-C, UNLESS NOTED OTHERWISE ON THE DRAWINGS.
4. 4x4 POSTS, NO. 1, PARA. 124-B, UNLESS NOTED OTHERWISE ON THE DRAWINGS
5. 4x6 POSTS, NO. 1, PARA. 123-B, UNLESS NOTED OTHERWISE ON THE DRAWINGS.
6. 6x6 AND LARGER POSTS, DENSE NO. 1, PARA. 131-BB. 2x4, 3x4 STUDS AND BLOCKING, STUD GRADE, PARA. 121-C, UNLESS NOTED OTHERWISE.
7. 2x6 OR LARGER STUDS AND BLOCKING, NO. 2, PARA. 123-C.
8. 2x, 3x PLATES, NO.2, PARA 124-C, UNLESS NOTED OTHERWISE ON THE DRAWINGS. PRESSURE TREATED LUMBER SHALL BE SBX/DOT AND ZINC BORATE.
9. FOUNDATION PLATES: PRESSURE TREATED DOUGLAS FIR. NO. 2, UNLESS NOTED OTHERWISE ON DRAWINGS. PRESSURE TREATED LUMBER SHALL BE SBX/DOT AND ZINC BORATE
10. 4x SLEEPERS EXPOSED TO WEATHER, PRESSURE TREATED DOUGLAS FIR, NO. 2 OR CALIFORNIA REDWOOD NO. 2 AT CONTRACTOR'S OPTION.

LAMINATED MEMBERS
LAMINATED MEMBERS SHALL BE IN CONFORMANCE WITH THE STANDARD SPECIFICATIONS FOR STRUCTURAL GLUE-LAMINATED TIMBER PER ANSI/AITC A190.1-2007. MEMBERS SHALL BE INDUSTRIAL APPEARANCE GRADE, EXTERIOR GLUE, END SEALED, LOAD WRAPPED AND MARKED WITH A QUALITY MARK AND A CERTIFICATE SHALL BE PROVIDED TO THE ENGINEER AND BUILDING DEPARTMENT INDICATING CONFORMANCE WITH ANSI/AITC A190.1, STRUCTURAL GLUED LAMINATED TIMBER.

1. GLULAMS: AITC COMBINATION SYMBOL 24F-V4, LAMINATIONS DF/DF AT SIMPLE SPANS. AITC COMBINATION SYMBOL 24F-V8, LAMINATIONS DF/DF AT CANTILEVER, CONTINUOUS SPAN BEAMS, OR BEAMS SUPPORTING TIEDOWNS.

ALL GLULAMS SHALL BE MANUFACTURED WITH A STANDARD CAMBER OF 3500 FT U.N.O. ON DRAWINGS. ALL BEAMS TO BE INSTALLED WITH CAMBER FACING UP.

ENGINEERED LUMBER
ALL ENGINEERED LUMBER BEAMS SHALL BE BY TRUS-JOIST MACMILLAN, BOISE, IDAHO:
1. LVL - LAMINATED VENEER LUMBER SHALL BE 1.9E MICROLLAM LVL.
2. PSL - PARALLEL STRAND LUMBER SHALL BE 2.0E PARALLAM PSL.
3. LSL - LAMINATED STRAND LUMBER SHALL BE 1.3E TIMBERSTRAND FOR STUDS, RIM BOARDS AND BLOCKING, 1.55 TIMBERSTRAND FOR JOISTS, BEAMS AND HEADERS.

LIGHT GAGE METAL CONNECTORS
ALL LIGHT GAGE METAL CONNECTORS SHALL BE "SIMPSON COMPANY STRONG TIE CONNECTORS," OR APPROVED EQUAL. INSTALL PER MANUFACTURER'S RECOMMENDATIONS, U.N.O. ON DRAWINGS.

NAILS
ALL NAILS SHALL BE BRIGHT COMMON WIRE NAILS, GALVANIZED FOR EXTERIOR WORK. 16d GREEN VINYL SINKERS MAY BE SUBSTITUTED FOR 10d COMMONS IN ALL APPLICATIONS EXCEPT SHEET METAL CONNECTORS AND PERMANENT EXTERIOR CONDITIONS. 16d GREEN VINYL SINKERS MAY BE SUBSTITUTED FOR 16d COMMONS AT 7/8 OF THE SPACING REQUIREMENT FOR THE 16d NAILS. IN NO CASE SHALL GREEN VINYL SINKERS BE USED FOR SHEET METAL CONNECTORS - USE THE MANUFACTURER'S RECOMMENDED NAILS. TO PROVIDE CORROSION RESISTANCE, NAILS INTO PRESSURE PRESERVATIVE TREATED AND FIRE-RETARDENT TREATED WOOD SHALL BE HOT-DIPPED GALVANIZED; HOWEVER, SOME METHODS OF PRESSURE-TREATING MAY ACT ADVERSELY WITH GALVANIZED METAL COMPONENTS. CONTRACTOR SHALL VERIFY WITH PRESSURE TREATED LUMBER SUPPLIER THAT GALVANIZED COMPONENTS WILL NOT BE ADVERSELY AFFECTED.

LIGHT-GAUGE METAL FRAMING
ALL LIGHT-GAUGE METAL FRAMING SHALL CONFORM TO THE STEEL STUD MANUFACTURER'S ASSOCIATION'S STANDARDS. INSTALL PER THEIR RECOMMENDATIONS AS STATED IN ICC-ES ESR-3046P. ALL SHEET METAL SHALL BE ASTM A653, GRADE D WITH A MINIMUM YIELD STRESS OF 50 KSI. USE GRADE A, 33 KSI FOR 43 MIL. (18 GAUGE) OR THINNER.

SELF-DRILLING FASTENERS
SELF-DRILLING FASTENERS SHALL BE "TEKS" AS MANUFACTURED BY ITW BUILDEX, GLENDALE HEIGHTS, ILLINOIS OR APPROVED EQUAL. USE LENGTH AND TYPE AS RECOMMENDED BY MANUFACTURER FOR INTENDED USE. INSTALLATION OF FASTENERS SHALL CONFORM TO MANUFACTURER RECOMMENDATIONS AND ICC-ES ESR-1976.

STRUCTURAL STEEL AND MISCELLANEOUS IRON
ASTM A992 FOR ALL W-SHAPES, A36 FOR ALL OTHER SHAPES, EXCEPT TUBE AND PIPE AND A572 GR. 50 FOR ALL PLATES, IN ACCORDANCE WITH AISC SPECIFICATIONS. ALL STRUCTURAL STEEL AND MISCELLANEOUS IRON SHALL RECEIVE SHOP PRIME COAT AND FINISH COAT PER ARCH., EXCEPT AS FOLLOWS:

- ALL STEEL EMBEDDED IN CONCRETE & EXPOSED TO WEATHER SHALL BE GALVANIZED U.N.O.
- CONTACT SURFACES IN SLIP CRITICAL CONNECTIONS SHALL BE FREE OF OIL, PAINT, LACQUER OR OTHER COATINGS (CLEAN MILL SCALE). NO OVERSPRAY IS PERMITTED. THESE CONNECTIONS SHALL BE PRIMED AFTER TIGHTENING.
- STEEL WHICH WILL RECEIVE SPRAY ON FIRE PROOFING MATERIAL.

STRUCTURAL TUBING - ASTM A500, GRADE B, Fy = 46 KSI.

STEEL PIPE - ASTM A53, TYPES E OR S, GRADE B, WITH SULPHUR NOT EXCEEDING 0.05%.

WELDING
ALL WELDING SHALL BE PERFORMED BY CERTIFIED WELDERS PER AWS "STANDARD QUALIFICATION PROCEDURE" TO PERFORM THE TYPE OF WORK REQUIRED. ALL WELDING SHALL BE IN ACCORDANCE WITH AWS WELDING CODE. ARC WELDING ELECTRODES SHALL BE E70 SERIES. WELDING SHALL BE DONE IN AN APPROVED FABRICATOR'S SHOP IN ACCORDANCE WITH IBC SECTION 1704.3. SHOPS NOT APPROVED WILL BE CHARGED FOR ALL SHOP WELDING INSPECTION REQUIRED BY THE CALIFORNIA BUILDING CODE. THE SOILS ENGINEER SHALL BE RETAINED TO PROVIDE OBSERVATION AND TESTING SERVICES DURING THE GRADING AND FOUNDATION PHASE OF CONSTRUCTION. INSPECTION & TESTING REPORTS SHALL BE SUBMITTED TO THE BUILDING DEPARTMENT FOR REVIEW.

MACHINE BOLTS, ANCHOR BOLTS & STUDS - ASTM A307. HOLES IN STEEL SHALL BE 1/16" OVERSIZED U.N.O.

LAG SCREWS
LAG SCREWS SHALL BE ASTM A307 FASTENERS. LEAD HOLES SHALL BE DRILLED AS FOLLOWS: FOR A DEPTH EQUAL TO THE UNTHREADED PORTION OF THE SHANK, THE LEAD HOLE SHALL BE THE SAME DIAMETER AS THE SHANK; FOR THE THREADED PORTION, THE DIAMETER SHALL BE 40% TO 70% OF THE DIAMETER OF THE SHANK TO THE SPECIFIED DEPTH OF PENETRATION. LEAD HOLES SHALL BE LUBRICATED PRIOR TO INSTALLATION.

THREADED RODS - ASTM A36 MATERIAL MEETING THE MECHANICAL REQUIREMENTS OF ASTM A307.

HIGH STRENGTH BOLTS - ASTM A325. UNLESS NOTED OTHERWISE ON THE DRAWINGS, ALL TYPES ARE SLIP-CRITICAL (SC), AND SHALL BE INSTALLED PER THE RESEARCH COUNCIL ON STRUCTURAL CONNECTIONS (RCSC) "SPECIFICATION FOR STRUCTURAL JOINTS USING ASTM A325 OR A490 BOLTS", SECTION 8(d). HOLES IN STEEL SHALL BE 1/16" OVERSIZED U.N.O.

HEADED ANCHOR STUDS
HEADED ANCHOR STUDS SHALL BE NELSON SHEAR CONNECTOR STUDS AS MANUFACTURED BY NELSON STUD WELDING, INC., ELYRIA, OHIO. PREPARATION OF HOLES & INSTALLATION OF ANCHORS SHALL CONFORM TO MANUFACTURER'S RECOMMENDATIONS AND ICC REPORT NO. 2614.

POWDER ACTUATED FASTENERS
POWDER ACTUATED FASTENERS SHALL BE "X-U" AS MANUFACTURED BY HILTI, TULSA, OKLAHOMA. INSTALL PER MANUFACTURER RECOMMENDATIONS AND ICC ESR 2269.

EXPANSION ANCHORS
EXPANSION ANCHORS SHALL BE KWIK BOLT TZ AS MANUFACTURED BY HILTI, INC. TULSA OKLAHOMA. PREPARATION OF HOLES AND INSTALLATION OF ANCHORS SHALL CONFORM TO MANUFACTUER'S RECOMMENDATIONS AND ICC REPORT 1917

SCREW ANCHORS
SCREW ANCHORS SHALL BE "TITEN HD SCREW ANCHOR" AS MANUFACTURED BY SIMPSON STRONG-TIE COMPANY, INC., PLEASANTON, CALIFORNIA. PREPARATION OF HOLES & INSTALLATION OF ANCHORS SHALL CONFORM TO MANUFACTURER'S RECOMMENDATIONS AND ICC-ES ESR-2713.

EPOXY ANCHORS AND DOWELS
EPOXY ANCHORS AND DOWELS SHALL BE INSTALLED USING "RE 500 SD", AS MANUFACTURED BY HILTI, INC. TULSA, OKLAHOMA. THREADED ROD ANCHORS SHALL BE ASTM A307 AND REINFORCING DOWELS SHALL BE ASTM A615 GRADE 60, UNLESS NOTED OTHERWISE ON THE DRAWINGS. ANCHORS AND DOWELS SHALL BE INSTALLED PER MANUFACTURER'S RECOMMENDATIONS AND ICC REPORT NO. 2322. [ANCHORS AND DOWELS SHALL NOT BE INSTALLED IN CONCRETE LESS THAN 28 DAYS OLD WITHOUT WRITTEN APPROVAL FROM THE ENGINEER.]

SHOP DRAWINGS FOR THE ENGINEERS REVIEW WILL BE REQUIRED AS FOLLOWS:
1. MIX DESIGNS;
2. REINFORCING STEEL;
3. STRUCTURAL STEEL AND MISCELLANEOUS METALS;

CONTRACTOR SHALL SUBMIT THREE SETS OF BOND PRINTS FOR REVIEW. FABRICATION SHALL NOT PROCEED UNTIL SHOP DRAWINGS HAVE BEEN REVIEWED BY THE ENGINEER.

LIGHT-GAGE METAL ROOF DECKING
LIGHT-GAUGE METAL ROOF DECKING SHALL BE 18 GAGE, HSB-36 AS MANUFACTURED BY VERCO MANUFACTURING CO., PHOENIX, ARIZONA OR APPROVED EQUAL. PANELS SHALL BE G60 GALVANIZED PER ASTM A653. PANELS SHALL BE ATTACHED TO PERPENDICULAR FRAMING WITH #12-24 x 7/8" HWH TEKS/4 SELF-DRILLING FASTENERS AT EACH FLUTE. PANELS SHALL BE ATTACHED AT SIDELAPS WITH #12-14 x 3/4" HWH TEKS/1 SELF-DRILLING FASTENERS AT 12" O.C. PANELS SHALL BE ATTACHED TO PARALLEL MEMBERS WITH #12-24 x 7/8" HWH TEKS/4 SELF-DRILLING FASTENERS AT 12" O.C.

SPECIAL INSPECTIONS
THE OWNER SHALL EMPLOY A SPECIAL INSPECTOR DURING CONSTRUCTION ON THE FOLLOWING PHASE OF WORK:

EXPANSION ANCHORS
- DURING INSTALLATION OF EXPANSION BOLTS, INCLUDING DIAMETER OF HOLE, DEPTH OF EMBEDMENT AND TORQUING OF BOLT.

SCREW ANCHORS
- DURING INSTALLATION OF SCREW ANCHORS TO VERIFY ANCHOR TYPE, ANCHOR DIMENSIONS, CONCRETE TYPE, DRILL-BIT TYPE, HOLE DIMENSIONS, HOLE CLEANING PROCEDURE, ANCHOR SPACING, EDGE DISTANCES, CONCRETE MEMBER THICKNESS, ANCHOR EMBEDMENT, TIGHTENING TORQUE, MAXIMUM IMPACT WRENCH TORQUE RATING AND ADHERENCE TO THE MANUFACTURER'S PUBLISHED INSTALLATION INSTRUCTIONS.

EPOXY ANCHORS AND DOWELS
- DURING INSTALLATION OF EPOXY ANCHORS AND DOWELS TO VERIFY ANCHOR/DOWEL TYPE, ANCHOR/DOWEL DIMENSIONS, CONCRETE TYPE, ADHESIVE IDENTIFICATION AND EXPIRATION DATE, DRILL-BIT TYPE, HOLE DIMENSIONS, HOLE CLEANING PROCEDURE, ANCHOR/DOWEL SPACING, EDGE DISTANCES, CONCRETE MEMBER THICKNESS, ANCHOR/DOWEL EMBEDMENT, TIGHTENING TORQUE AND ADHERENCE TO THE MANUFACTURER'S PUBLISHED INSTALLATION INSTRUCTIONS.
- SPECIAL INSPECTOR SHALL VERIFY INITIAL INSTALLATION OF EACH TYPE AND SIZE OF ANCHOR/DOWEL BY CONSTRUCTION PERSONNEL ON SITE.
- ANY CHANGE IN ANCHOR/DOWEL PRODUCT BEING INSTALLED OR PERSONNEL PERFORMING THE INSTALLATION MUST REQUIRE AN INITIAL INSPECTION.
- FOR ONGOING INSTALLATIONS OVER A PERIOD OF TIME, SPECIAL INSPECTOR SHALL PERFORM REGULAR INSPECTIONS TO CONFIRM CORRECT HANDLING AND INSTALLATION OF PRODUCT.

CONCRETE
- VERIFY USE OF REQUIRED DESIGN MIX.
- DURING TIME FRESH CONCRETE IS SAMPLED TO FABRICATE SPECIMENS FOR STRENGTH TESTS, PERFORMANCE OF SLUMP AND AIR CONTENT TESTS, AND DETERMINATION OF CONRETE TEMPERATURE.
- INSPECTION OF CONCRETE AND SHOTCRETE PLACEMENT FOR PROPER APPLICATION TECHNIQUES.

EXCEPTIONS:
1. STRUCTURAL DESIGN OF FOOTING IS BASED ON A SPECIFIED COMPRESSIVE STRENGTH (f'c) NO GREATER THAN 2,500 PSI.
2. NONSTRUCTURAL CONCRETE SLABS SUPPORTED DIRECTLY ON EARTH WHERE NO SPECIAL HAZARD EXISTS.

PIER FOUNDATIONS
SPECIAL INSPECTION IS REQUIRED FOR PIER FOUNDATIONS FOR BUILDINGS ASSIGNED TO SEISMIC DESIGN CATEGORY C, D, E OR F. PERIODIC SPECIAL INSPECTION IS REQUIRED DURING PLACEMENT OF REINFORCEMENT AND CONTINUOUS SPECIAL INSPECTION IS REQUIRED DURING PLACEMENT OF CONCRETE.

NON-SHRINK GROUT
- DURING THE TAKING OF TEST SPECIMENS AS RECOMMENDED BY MANUFACTURER AND DURING THE PLACEMENT OF GROUT TO VERIFY FULL BEARING BELOW BASE PLATE.

BOLTS INSTALLED IN CONCRETE
- DURING INSTALLATION OF BOLTS AND PLACING OF CONCRETE AROUND SUCH BOLTS. WHERE SPECIFIED ON DETAILS.

REINFORCING STEEL
- INSPECTION AND PLACEMENT OF REINFORCING STEEL.

WELDING
- ALL STRUCTURAL WELDING, INCLUDING WELDING OF REINFORCING STEEL.

EXCEPTIONS:
1. WELDING DONE ON THE PREMISES OF A FABRICATOR REGISTERED AND APPROVED BY THE BUILDING OFFICIAL TO PERFORM SUCH WORK WITHOUT SPECIAL INSPECTION AND PER CBC SECTION 1704.3.
2. ALL SINGLE PASS FILLETS MAY HAVE PERIODIC INSPECTIONS IN ACCORDANCE WITH CBC SECTION 1704.3

HIGH STRENGTH BOLTING
- DURING ALL BOLT INSTALLATIONS AND TIGHTENING OPERATIONS.

EXCEPTIONS:
1. THE SPECIAL INSPECTOR NEED NOT BE PRESENT DURING THE ENTIRE INSTALLATION AND TIGHTENING OPERATION, PROVIDED HE HAS:
   i) INSPECTED THE SURFACES AND BOLT TYPE FOR CONFORMANCE TO PLANS AND SPECIFICATIONS PRIOR TO START OF BOLTING.
   ii) AND WILL, UPON COMPLETION OF ALL BOLTING, VERIFY THE MINIMUM SPECIFIED BOLT TENSION FOR 10 PERCENT OF THE BOLTS FOR EACH CONNECTION WITH A MINIMUM OF TWO BOLTS PER CONNECTION.
2. IN BEARING-TYPE CONNECTIONS WHEN THREADS ARE NOT REQUIRED BY DESIGN TO BE EXCLUDED FROM THE SHEAR PLANE, INSPECTION PRIOR TO OR DURING INSTALLATION WILL NOT BE REQUIRED.

STRUCTURAL MASONRY
- INSTALLATION OF STRUCTURAL MASONRY SHALL BE INSPECTED AND VERIFIED IN ACCORDANCE WITH THE QUALITY ASSURANCE PROGRAM REQUIREMENTS OF TMS 402-11/ACI 530-11/ASCE 5-11 "BUILDING CODE REQUIREMENTS FOR MASONRY STRUCTURES" AND TMS 602-11/ACI 530.1-11/ASCE 6-11 "SPECIFICATION FOR MASONRY STRUCTURES."
  1. MINIMUM QUALITY ASSURANCE PROGRAM FOR MASONRY IN RISK CATEGORY I, II, OR III STRUCTURES SHALL COMPLY WITH TABLE 1.19.2.
  2. MINIMUM QUALITY ASSURANCE PROGRAM FOR MASONRY IN RISK CATEGORY IV STRUCTURES SHALL COMPLY WITH TABLE 1.19.3.

WOOD
CONTINUOUS SPECIAL INSPECTION IS REQUIRED DURING FIELD GLUING OPERATIONS OF ELEMENTS OF THE SEISMIC-FORCE-RESISTING SYSTEM. PERIODIC SPECIAL INSPECTION IS REQUIRED FOR NAILING, BOLTING, ANCHORING AND OTHER FASTENING OF COMPONENTS WITHIN THE SEISMIC-FORCE-RESISTING SYSTEM, INCLUDING WOOD SHEAR WALLS, WOOD DIAPHRAGMS, DRAG STRUTS, BRACES, SHEAR PANELS, AND HOLD-DOWNS.
EXCEPTIONS:
SPECIAL INSPECTION IS NOT REQUIRED FOR WOOD SHEAR WALLS, SHEAR PANELS, AND DIAPHRAGMS, INCLUDING NAILING, BOLTING, ANCHORING, AND OTHER FASTENING TO OTHER COMPONENTS OF THE SEISMIC-FORCE-RESISTING SYSTEM, WHERE THE FASTENER SPACING OF THE SHEATHING IS MORE THAN 4 INCHES (102mm) ON CENTER (O.C.)

HIGH-LOAD DIAPHRAGMS
HIGH-LOAD DIAPHRAGMS DESIGNED IN ACCORDANCE WITH C.B.C. 2013 TABLE 2306.2(2) SHALL BE INSTALLED WITH SPECIAL INPECTIONS. THE SPECIAL INSPECTOR SHALL INSPECT THE WOOD STRUCTURAL PANEL SHEATHING TO ASCERTAIN WHETHER IT IS OF THE GRADE AND THICKNESS SHOWN ON THE APPROVED BUILDING PLANS. ADDITIONALLY, THE SPECIAL INSPECTOR MUST VERIFY THE NOMINAL SIZE OF FRAMING MEMBERS AT ADJOINING PANEL EDGES, THE NAIL OR STAPLE DIAMETER AND LENGTH, THE NUMBER OF FASTENER LINES AND THAT THE SPACING BETWEEN FASTENERS IN EACH LINE AND AT THE EDGE MARGINS AGREES WITH THE APPROVED BUILDING PLANS.

COLD FORM STEEL FRAMING
PERIODIC SPECIAL INSPECTION IS REQUIRED DURING WELDING OPERATIONS OF ELEMENTS OF THE SEISMIC-FORCE-RESISTING SYSTEM. PERIODIC SPECIAL INSPECTION IS REQUIRED FOR SCREW ATTACHMENT, BOLTING, ANCHORING, AND OTHER FASTENING OF COMPONENTS WITHIN THE SEISMIC-FORCE-RESISTING SYSTEM, INCLUDING STRUTS, BRACES, AND HOLD-DOWNS.

ARCHITECTURAL COMPONENTS
PERIODIC SPECIAL INSPECTION IS REQUIRED DURING THE ERECTION AND FASTENING OF EXTERIOR CLADDING, INTERIOR AND EXTERIOR NON-BEARING WALLS AND INTERIOR AND EXTERIOR VENEER IN STRUCTURES ASSIGNED TO SEISMIC DESIGN CATEGORY D, E OR F.
EXCEPTIONS:
1. SPECIAL INSPECTION IS NOT REQUIRED FOR ARCHITECTURAL COMPONENTS IN STRUCTURES 30 FEET (9,144 mm) OR LESS IN HEIGHT.
2. SPECIAL INSPECTION IS NOT REQUIRED FOR CLADDING AND VENEER WEIGHING 5 psf (24.5 N/m^2) OR LESS.
3. SPECIAL INSPECTION IS NOT REQUIRED FOR INTERIOR NON-BEARING WALLS WEIGHING 15 psf (73.5 N/m^2) OR LESS.

MECHANICAL AND ELECTRICAL COMPONENTS
SPECIAL INSPECTION FOR MECHANICAL AND ELECTRICAL EQUIPMENT SHALL BE AS FOLLOWS:
1. PERIODIC SPECIAL INSPECTION IS REQUIRED DURING THE ANCHORAGE OF ELECTRICAL EQUIPMENT FOR EMERGENCY OR STANDBY POWER SYSTEMS IN STRUCTURES ASSIGNED TO SEISMIC DESIGN CATEGORY C, D, E OR F.
2. PERIODIC SPECIAL INSPECTION IS REQUIRED DURING THE INSTALLATION OF ANCHORAGE OF OTHER ELECTRICAL EQUIPMENT IN STRUCTURES ASSIGNED TO SEISMIC DESIGN CATEGORY E OR F.
3. PERIODIC SPECIAL INSPECTION IS REQUIRED DURING THE INSTALLATION OF PIPING SYSTEMS INTENDED TO CARRY FLAMMABLE, COMBUSTABLE OR HIGHLY TOXIC CONTENTS AND THEIR ASSOCIATED MECHANICAL UNITS IN STRUCTURES ASSIGNED TO SEISMIC DESIGN CATEGORY C, D, E OR F.
4. PERIODIC SPECIAL INSPECTION IS REQUIRED DURING THE INSTALLATION OF HVAC DUCTWORK THAT WILL CONTAIN HAZARDOUS MATERIALS IN STRUCTURES ASSIGNED TO SEISMIC DESIGN CATEGORY C, D, E OR F.
5. PERIODIC SPECIAL INSPECTION IS REQUIRED DURING THE INSTALLATION OF VIBRATION ISOLATION SYSTEMS IN STRUCTURES ASSIGNED TO SEIMIC DESIGN CATEGORY C, D, E OR F WHERE THE CONSTRUCTION DOCUMENTS REQUIRE A NOMINAL CLEARANCE OF 0.25 INCHES (6.4 mm) OR LESS BETWEEN THE EQUIPMENT SUPPORT FRAME AND RESTRAINT.

SPECIAL INSPECTOR
- THE SPECIAL INSPECTOR SHALL BE A QUALIFIED PERSON WHO SHALL DEMONSTRATE HIS COMPETENCE, TO THE SATISFACTION OF THE BUILDING OFFICIAL, FOR INSPECTION OF A PARTICULAR TYPE OF CONSTRUCTION OR OPERATION REQUIRING SPECIAL INSPECTION.

DUTIES AND RESPONSIBILITIES OF THE SPECIAL INSPECTOR
- THE SPECIAL INSPECTOR SHALL OBSERVE THE WORK ASSIGNED FOR CONFORMANCE WITH THE APPROVED DESIGN DRAWINGS AND SPECIFICATIONS.
- THE SPECIAL INSPECTOR SHALL FURNISH INSPECTION REPORTS TO THE BUILDING OFFICIAL, THE ENGINEER OR ARCHITECT OF RECORD, AND OTHER DESIGNATED PERSONS. ALL DISCREPANCIES SHALL BE BROUGHT TO THE IMMEDIATE ATTENTION OF THE CONTRACTOR FOR CORRECTION, THEN, IF UNCORRECTED, TO THE PROPER DESIGN AUTHORITY AND TO THE BUILDING OFFICIAL.
- THE SPECIAL INSPECTOR SHALL SUBMIT A FINAL SIGNED REPORT STATING WHETHER THE WORK REQUIRING SPECIAL INSPECTION WAS, TO THE BEST OF THE INSPECTOR'S KNOWLEDGE, IN COMPLIANCE WITH THE APPROVED PLANS AND SPECIFICATIONS AND THE APPLICABLE WORKMANSHIP PROVISIONS OF THE CODE.

CONSTRUCTION LIABILITY
CONSTRUCTION CONTRACTOR AND HIS SUBCONTRACTORS AGREE THAT IN ACCORDANCE WITH GENERALLY ACCEPTED CONSTRUCTION PRACTICES, CONSTRUCTION CONTRACTOR AND HIS SUBCONTRACTORS WILL BE REQUIRED TO ASSUME SOLE AND COMPLETE RESPONSIBILITY FOR JOB SITE CONDITIONS DURING THE COURSE OF CONSTRUCTION OF THE PROJECT, INCLUDING SAFETY OF ALL PERSONS AND PROPERTY; THAT THIS REQUIREMENT SHALL BE MADE TO APPLY CONTINUOUSLY AND NOT LIMITED TO NORMAL WORKING HOURS, AND CONSTRUCTION CONTRACTOR AND HIS SUBCONTRACTORS FURTHER AGREE TO DEFEND, INDEMNIFY AND HOLD DESIGN PROFESSIONAL HARMLESS FROM ANY AND ALL LIABILITY, REAL OR ALLEGED, IN CONNECTION WITH THE PERFORMANCE OF WORK ON THIS PROJECT, EXCEPT LIABILITY ARISING FROM THE SOLE NEGLIGENCE OF DESIGN PROFESSIONAL.

PROJECT DESIGN DATA

GOVERNING CODE: 2016 CALIFORNIA BUILDING CODE

SUPERSTRUCTURE DESIGN LOAD
ROOF DEAD LOAD = 20.0 psf
ROOF LIVE LOAD = 20.0 psf

WIND DESIGN
MEAN BUILDING HEIGHT = 23.0'
Vult = 110 MPH (LRFD)
Vasd = 85 MPH (ASD)
RISK CATEGORY = II
EXPOSURE = B
Gcpi = ± 0.18
C&C WIND PRESSURES:
WALL = 15.1 psf (ASD)
ROOF = 9.6 psf (ASD)

SEISMIC DESIGN
RISK CATEGORY = II
IMPORTANCE FACTOR, Ie = 1.00
SITE CLASS = C
Ss = 1.50 S1 = 0.60
Fa = 1.0 Fv = 1.3
Sds = 1.00 Sd1 = 0.52
SEISMIC DESIGN CATEGORY = D
BASIC S.F.R.S. = LIGHT-FRAMED WALLS W/ WOOD SHEAR PANELS
Cs = 0.154W (LRFD); 0.110W (ASD)
R = 6.5 ANALYSIS = EQUIVALENT LATERAL FORCE PROCEDURE
SEISMIC OVERSTRENGTH FACTOR, Ωo = 3.0
MAX ALLOWABLE STORY DRIFT = 2%

DEFERRED SUBMITTALS

NOTE:
SUBMITTAL DOCUMENTS (SHOP DRAWING & CALCULATIONS) FOR DEFERRED SUBMITTAL ITEMS SHALL BE SUBMITTED TO THE ARCHITECT OR ENGINEER OF RECORD, WHO SHALL REVIEW THEM AND FORWARD THEM TO THE BUILDING OFFICIAL WITH A NOTATION INDICATING THAT THE DEFERRED SUBMITTAL DOCUMENTS HAVE BEEN REVIEWED AND THAT THEY HAVE BEEN FOUND TO BE IN GENERAL CONFORMANCE WITH THE DESIGN OF THE BUILDING. THE DEFERRED SUBMITTAL ITEMS SHALL NOT BE INSTALLED UNTIL THEIR DESIGN AND SUBMITTAL DOCUMENTS HAVE BEEN APPROVED BY THE BUILDING OFFICIAL. ITEMS REQUIRING DEFERRED SUBMITTALS ARE AS FOLLOWS:
1. WIRE MESH SCREEN
2. INTERIOR RAILS
3. CEILING

THE ABOVE LISTED SUBMITTAL DOCUMENTS SHALL BE STAMPED AND SIGNED BY A REGISTERED PROFESSIONAL ENGINEER IN THE STATE OF CALIFORNIA. SEE STRUCTURAL SPECIFICATIONS ON THIS SHEET FOR ADDITIONAL SUBMITTAL REQUIREMENTS.

ANY FRAMING (BEAM, POST, BLOCKING, ETC) NEEDED TO SUPPORT THE DEFERRED SUBMITTAL ITEMS ABOVE WILL BE ADDED AFTER THE FINAL REVIEW OF THE SUBMITTAL DOCUMENTS.

GENERAL NOTES

1. <E> DENOTES EXISTING CONSTRUCTION
   <N> DENOTES NEW CONSTRUCTION
2. 20'-0"± DENOTES EXISTING DIMENSION
   2'-0"* DENOTES DIMENSION PROVIDED BY VENDOR. CONTRACTOR TO VERIFY.
3. SEE STRUCTURAL SPECIFICATIONS THIS SHEET
4. CONTRACTOR SHALL VERIFY ALL EXISTING CONDITIONS AND DIMENSIONS PRIOR TO BEGINNING CONSTRUCTION AND/OR ORDERING MATERIALS. ANY DISCREPANCIES SHALL BE BROUGHT TO THE ATTENTION OF THE ENGINEER IMMEDIATELY.

DRAWING INDEX

S1.1 STRUCTURAL SPECIFICATIONS
S1.2 STRUCTURAL WOOD SCHEDULES AND NOTES
S1.3 STRUCTURAL CONCRETE SCHEDULES AND NOTES
S2.0 FOUNDATION PLAN
S2.1 ROOF FRAMING PLAN
S5.10 FOUNDATION SECTIONS AND DETAILS
S5.11 FOUNDATION SECTIONS AND DETAILS
S6.30 ROOF FRAMING SECTIONS AND DETAILS
S6.31 ROOF FRAMING SECTIONS AND DETAILS
S6.40 WALL FRAMING SECTIONS AND DETAILS
S6.41 WALL FRAMING SECTIONS AND DETAILS
S6.90 COLLECTOR DETAILS

FOUNDATION DESIGN CRITERIA

SOIL REPORT BY GEO-LOGIC ASSOCIATES
REPORT #: PA18.1016.00
DATE: MARCH 15, 2018

DRILLED PIER
- ALLOWABLE SKIN FRICTION
  DEAD AND LIVE = 500 PSF
  DEAD AND LIVE AND SEISMIC = 500 PSF
  UPLIFT = 500 PSF

NOTE: SEE S1.2 & S1.3 FOR ADDITIONAL FOUNDATION NOTES.

NOTE:
"EARTHWORK, SLAB SUBGRADE PREPARATION, FOUNDATION CONSTRUCTION, PIER DRILLING, UTILITY TRENCH BACKFILL, PAVEMENT CONSTRUCTION, AND SITE DRAINAGE SHOULD BE PERFORMED IN ACCORDANCE WITH THE GEOTECHNICAL REPORT PREPARED BY PACIFIC GEOTECHNICAL ENGINEERING, DATED MARCH 15, 2018

STRUCTURAL CONCRETE MATERIAL SPECIFICATIONS

CONCRETE
ALL CONCRETE SHALL HAVE MINIMUM 28 DAY COMPRESSIVE STRENGTH AND MAXIMUM WATER/CEMENT RATIO AS LISTED IN THE TABLE BELOW:

CONCRETE CLASS	MINIMUM 28 DAY COMPRESSIVE STRENGTH	MAXIMUM WATER/CEMENT RATIO	
		NON-AIR ENTRAINED	AIR ENTRAINED
CLASS A	2500 psi	.55	.55
CLASS B	3000 psi	.55	.55
CLASS C	3500 psi	.55	.50
CLASS D	4000 psi	.50	.45
CLASS E	5000 psi	.45	.40

AT CONTRACTOR'S OPTION APPROXIMATELY 4 OUNCES PER 100 POUNDS OF CEMENT OF POZZOLITH 300-R BY MASTER BUILDERS OR APPROVED EQUAL SHALL BE USED AS A WATER DISPERSING ADDITIVE. TO PROVIDE THE REQUIRED AIR CONTENT, THE CONTRACTOR MAY ADD AN AIR ENTRAINING AGENT CONFORMING TO THE LATEST REVISION OF ASTM SPECIFICATIONS C 260 TO THE CONCRETE MIX.

CONCRETE ELEMENT	CLASS OF CONCRETE	MAX. SIZE AGGREGATE (INCH)	MAX. SLUMP (INCH)	TOTAL AIR CONTENT (%)
FOOTINGS & DRILLED PIERS	B	1"	4"	-
5" SLAB-ON-GRADE (ONLY THOSE SHOWN ON STRUCT. DWGS.)**	B	3/4"	3"	3%-4%
MAT SLABS (SLAB-ON-GRADE**	D	3/4"	3"	-

MAINTAIN CONCRETE IN A MOIST CONDITION FOR A SUITABLE PERIOD AFTER PLACEMENT IN ACCORDANCE WITH ACI 301, CHAPTER 12. CEMENT SHALL BE TYPE II AND CONFORM TO ASTM C150. AGGREGATE SHALL CONFORM TO ASTM C33. USE OF PLEASANTON AGGREGATE IS NOT RECOMMENDED.

MIX DESIGN MAY BE PROPORTIONED TO CONTAIN A MAXIMUM OF 30% FLY ASH PER WEIGHT OF CEMENTIUS MATERIAL EXCEPT RC/PT SLABS SHALL NOT EXCEED 15% WITHOUT PRIOR APPROVAL OF THE ENGINEER AND SUBSEQUENT TESTING TO VERIFY MECHANICAL PROPERTIES OF HARDENED CONCRETE AT THE TIME OF STRESSING/RELEASE OF FALSEWORK. CONCRETE MIX FOR PT. SLABS & WALLS SHALL HAVE A 21 DAY TOTAL DRYING SHRINKAGE OF LESS THAN 0.036%.

**AT SLABS-ON-GRADE W/ MOISTURE PROTECTION. PROVIDE WATER/CEMENT RATIO OF 0.45 PER SOILS REPORT.

LIGHT-WEIGHT CONCRETE
MATERIALS SHALL BE PROPORTIONED TO PRODUCE CONCRETE WITH A MINIMUM COMPRESSIVE STRENGTH OF 3000 PSI AT 28 DAYS WITH A MAXIMUM AIR DRIED WEIGHT OF 110 PCF. SLUMP SHALL BE 3" (±1"). AIR CONTENT SHALL BE 4% (±2%) BY VOLUME. MAXIMUM WATER CEMENT RATIO SHALL NOT EXCEED 6.25 GALS PER SACK. MAXIMUM AGGREGATE SIZE SHALL NOT EXCEED 3/4". LIGHT-WEIGHT CONCRETE SHALL BE MIXED AND BATCHED PER ASTM C94. CONCRETE SHALL BE MAINTAINED ABOVE 50 DEGREES FAHRENHEIT AND IN A MOIST CONDITION FOR AT LEAST 7 DAYS AFTER PLACEMENT.

REINFORCING STEEL
BARS FOR REINFORCING SHALL BE GRADE 60 DEFORMED BARS CONFORMING TO ASTM A615 INCLUDING SUPPLEMENT S1. WHERE REINFORCING STEEL IS SHOWN TO BE WELDED, BARS SHALL CONFORM TO ASTM 706. LAP SPLICES SHALL CLASS B U.N.O. IN ACCORDANCE WITH ACI 318. STANDARD HOOKS SHALL BE IN ACCORDANCE WITH ACI 318.
VERTICAL REINFORCEMENT FOR COLUMNS SHALL CONFORM TO ASTM A706 [MEMBERS NOT PART OF THE LATERAL FORCE RESISTING SYSTEM] OR SHALL MEET THE FOLLOWING REQUIREMENTS:
1. THE ACTUAL YIELD STRENGTH BASE ON MILL TESTS SHALL NOT EXCEED THE SPECIFIED YIELD STRENGTH BY MORE THAN 18,000 psi.
2. THE RATIO OF THE ACTUAL ULTIMATE TENSILE STRENGTH TO THE ACTUAL YIELD STRENGTH SHALL NOT BE LESS THAN 1.25.

SHORING
ALL EXCAVATION AND SHORING SHALL BE PERFORMED IN SUBSTANTIAL CONFORMANCE WITH OSHA, STATE AND LOCAL JURISDICTION REQUIREMENTS AS WELL AS THE GEOTECHNICAL REPORT, AND SHALL BE THE SOLE RESPONSIBILITY OF THE CONTRACTOR. WHERE REQUIRED, CONTRACTOR SHALL PROVIDE CALCULATIONS AND SHOP DRAWINGS FOR SHORING SIGNED BY A REGISTERED CIVIL OR STRUCTURAL ENGINEER FROM THE STATE OF CALIFORNIA. SHOP DRAWINGS AND CALCULATIONS SHALL BE REVIEWED AND APPROVED BY THE ENGINEER PRIOR TO START OF ANY WORK. (DO NOT USE PLEASANTON AGGREGATE)

EARTHWORK
ALL EARTHWORK SHALL BE IN CONFORMANCE WITH GEOTECHNICAL INVESTIGATION REPORT BY PACIFIC GEOTECHNICAL ENGINEERING DATED NOVEMBER 30, 2001. INCLUDING ANY AMENDMENTS & SUPPLEMENTS
THE SOILS ENGINEER SHALL BE RETAINED TO PROVIDE OBSERVATION AND TESTING SERVICES DURING THE GRADING AND FOUNDATION PHASE OF CONSTRUCTION. INSPECTION & TESTING REPORTS SHALL BE SUBMITTED TO THE BUILDING DEPARTMENT FOR REVIEW.

FORMWORK DESIGN:
DESIGN AND CONSTRUCTION OF FORMWORK, FORMWORK SHORING, AND RE-SHORING IS THE RESPONSIBILITY OF THE CONTRACTOR AND SHALL BE IN CONFORMANCE WITH ACI 301. SUBMIT PROPOSED SOFFIT PLANS TO THE ENGINEER AS A RECORD.

RESHORING:
RESHORING SHALL CONFORM TO ACI 301. SUBMIT PROPOSED RESHORING PLANS TO THE ENGINEER AS A RECORD.

JOB COPY
These plans must be kept on the job at all times.
CITY OF MORGAN HILL
BUILDING DIVISION

WESTON MILES
ARCHITECTS
17500 Depot Street, Suite #200
Morgan Hill, CA 95037
1 •408 • 779 • 6686
• Architecture • Landscape •

PEOPLES ASSOCIATES
STRUCTURAL ENGINEERS
408-957-9220 • www.pase.com
San Jose, California Pleasanton, California

REGISTERED PROFESSIONAL ENGINEER
DAVE Y. LO
S 5589
Exp. 6/30/19
STRUCTURAL
STATE OF CALIFORNIA

CONSULTANT JOB NO: 17-253

REVISIONS
1 03/28/2019 PLAN REVIEW #2
2
3

STRUCTURAL SPECIFICATIONS

MORGAN HILL LIBRARY ADDITION

CITY OF MORGAN HILL
660 W MAIN AVE, MORGAN HILL, CA 95037

These drawings are instruments of service and are the property of WESTON MILES ARCHITECTS, INC. All designs and other information on the drawings are for use on the specified project and shall not be used otherwise without the expressed written permission of WESTON MILES ARCHITECTS, INC.

Written dimensions on these drawings shall have precedence over scaled dimensions. Contractors shall verify and be responsible for all dimensions and conditions on the job and this office shall be notified of any variations from the dimensions and conditions shown by these drawings. Shop details shall be submitted to this office for approval before proceeding with fabrication.

© Copyrighted 2019

DATE: 02/8/2019

JOB NO: 15058

S1.1

SHEARWALL SCHEDULE

EDGE NAILING (P.E.N.)		FDN. SILL PLATE	ANCHOR BOLT SPACING		SHEAR CLIP SPACING 'A35' / 'LTP4'		PLATE CONNECTION NAILING OR BOLTING				SHEAR CAPACITY (PLF)		REFERENCE NOTES
MARK	SPACING		1 SIDE	2 SIDES	1 SIDE	2 SIDES	1 SIDE	RIM/BLKG.	2 SIDES	BLKG.	1 SIDE	2 SIDES	SEE BELOW
TYP MIN. UNO	6" O.C.	2x MIN.	48" O.C.	–	24"/24" O.C.	–	16d @ 8" O.C.	1½x LSL	–	–	–	–	1, 7
6	6" O.C.	2x MIN.	48" O.C.	–	16"/16" O.C.	–	16d @ 4" O.C.	1¾x LSL	–	–	340	–	1
4	4" O.C.	3x	44" O.C.	22" O.C	11"/11" O.C.	–/11" O.C. EA. SIDE	2–16d @ 6" O.C.	1¾x LSL	'SDS' @ 6" O.C.	3½x LSL (MIN)	510	1020	1,2,3,4,5
3	3" O.C.	3x	32" O.C.	16" O.C.	8"/8" O.C.	–/8" O.C. EA. SIDE	'SDS' @ 9" O.C.	3½x LSL	2 ROWS 'SDS' @ 9" O.C.	3½x LSL (MIN)	665	1330	1,2,3,4,5,6
2	2" O.C.	3x	24" O.C.	12" O.C.	6"/6" O.C.	–/6" O.C. EA. SIDE	'SDS' @ 6" O.C.	3½x LSL	2 ROWS 'SDS' @ 6" O.C.	3½x LSL (MIN)	870	1740	1,2,3,4,5,6

NOTES:

1. – STRUCTURAL DRAWINGS SHOW SHEATHING ONLY WHERE REQUIRED. AS REQUIRED BY THE ARCHITECT, PROVIDE FULL WRAP PLYWOOD SHEATHING. AT OTHER WALLS SHOWN AS STRUCTURAL WALLS, ANCHOR BOLTS, PLATE CONNECTION & CLIPS SHALL BE INSTALLED AS SPECIFIED AS TYP. MIN. U.N.O.
   - SHEATHING SHALL BE ½" PLYWOOD (STRUCTURAL 1) OR OSB (STRUCTURAL 1) PER THE STRUCTURAL SPECIFICATIONS.
   - SHEATHING FASTENERS SHALL BE 10d COMMON OR 10d GALVANIZED BOX. (STAGGER IF SPACING IS 3" O.C. & CLOSER. MINIMUM SPACING BETWEEN NAIL LINES IS ⅜")
   - PROVIDE ⅛" SPACE AT ALL PANEL END AND EDGE JOINTS.
   - ALL STUDS AND PLATES SHALL BE 2x U.N.O.
   - BLOCK ALL EDGES OF SHEATHING.
   - PLATE CONNECTION NAILS SHALL BE 16d COMMON, U.N.O.
   - ALL FIELD NAILING SHALL BE 10d @ 12" O.C.
   - SHEAR CLIPS SHALL BE SIMPSON 'A35' OR 'LTP4' CONNECTORS. 'LTP4' CLIPS SHALL BE INSTALLED USING 8d COMMON NAILS AND MAY BE INSTALLED OVER WALL SHEATHING WITH LONG DIMENSION HORIZONTAL
   - ALL ANCHOR BOLTS SHALL HAVE 3" SQ.x¼" W/ 11/16"x1¾" DIAGONAL SLOT (USE STD. CUT WASHER O/ PLATE WASHER) PLATE WASHERS. USE SIMPSON BPS-6 WASHER (3"x4½") @ 6" THICK SHEARWALL. PLATE WASHER TO EXTEND TO WITHIN ½" OF THE EDGE OF THE SILL PLATE ON THE SIDE(S) WITH SHEATHING. INCREASE PLATE WASHER AS REQUIRED. A.B. CAN BE OFFSET AS REQUIRED BUT SHOULD NOT BE PLACED LESS THAN 1¾" FROM EDGE OF SILL PLATE. STAGGERED A.B. @ DOUBLE SIDED SHEARWALLS IS ALSO ACCEPTABLE. PROVIDE 2 ANCHOR BOLTS MINIMUM PER PLATE W/ ONE BOLT WITHIN 6" TO 12" OF ENDS. THESE DO NOT APPLY TO TIEDOWN ANCHORS. SEE TIEDOWN SCHEDULE FOR TIEDOWN ANCHOR REQUIREMENTS. ANCHOR BOLTS SHALL BE HOT-DIPPED GALVANIZED OR ZINC PLATED UNLESS IT CAN BE SHOWN THAT THE PRESSURE-TREATING PROCESS USED SBX/DOT OR ZINC BORATE. ANCHOR BOLTS SHALL BE ONE OF THE FOLLOWING:
     1. ⅝"ø A.B. W/ 1⅞" HOOK x 7" MINIMUM EMBEDMENT INTO CONCRETE. (HOOK LENGTH IS MEASURED FROM INSIDE FACE OF VERT. TO END OF HOOK); OR
     2. AT ELEVATED CONCRETE SLABS AT LEAST 6" THICK, ⅝"ø THREADED ROD IN BOLT STAND W/ 1" MAX. STAND HEIGHT.
   - AT EXTERIOR WALLS WHERE ONE SIDE SHEATHING IS NOTED, NO PLATE CONNECTION OR SIMPSON CLIPS WILL BE REQUIRED; IF TWO SIDES SHEATHING IS NOTED, THEN ONE SIDED PLATE CONNECTION AND ONE SIDED SHEAR CLIPS WILL BE REQUIRED. SEE FLOOR SECTIONS AT EXTERIOR WALLS.
   - SHEAR WALLS SHALL BE CONSTRUCTED WITH PANEL SHEETS NOT LESS THAN 4' BY 8', EXCEPT AT BOUNDARIES AND CHANGES IN FRAMING WHERE MINIMUM SHEET DIMENSION SHALL BE 24" UNLESS ALL EDGES OF THE UNDERSIZED SHEETS ARE SUPPORTED BY FRAMING MEMBERS OR BLOCKING.
2. – 'SDS' DENOTES ¼"ø 'SDS' WOOD SCREWS BY SIMPSON STRONG-TIE WITH 2" MINIMUM PENETRATION INTO FRAMING BELOW.
   - WHERE SHEATHING IS APPLIED TO BOTH FACES OF THE WALL, ADJOINING SHEATHING EDGES SHALL BE OFFSET TO FALL ON DIFFERENT FRAMING MEMBERS.
   - ALL FRAMING MEMBERS RECEIVING EDGE NAILING FROM ABUTTING PANELS SHALL BE 3x MIN.
3. – ROWS OF 16d SHALL BE STAGGERED & SPACED ½" APART
4. – FOR INTERIOR DOUBLE SIDED SHEARWALL, USE 3½" LSL RIM/BLKG. @ 4" WALL AND 5½" LSL RIM/BLKG. @ 6" WALL. USE 'LTP4' SHEAR CLIPS EA. SIDE OF WALL (STAGGERED) AT 6" WALL, IT IS ACCEPTABLE TO SISTER 3.5x & 1.75x LSL RIM. USING SILL PLATE CONNECTION. BOTH ROWS OF SCREWS SHALL BE IN 3.5x RIM. DO NOT PUT SCREW IN 1.75x RIM. AT 6". IN LIEU OF SISTERING RIM, IT IS ACCEPTABLE TO USE 5.5x PSL OR 5.5x LP 1730 F_B– 1.35E LSL RIM.
5. – FOR 4" THICK NOMINAL DOUBLE SIDED SHEARWALL, USE 3x FLOOR SILL PLATE.
6. – AT DOUBLE SIDED SHEARWALLS, MOISTURE CONTENT OF SILL SHALL NOT EXCEED 19% AT THE TIME OF INSTALLATION OF SILL CONNECTION (ALTERNATIVELY, DRY SILL PLATES SHALL BE USED).
   - AT DOUBLE SIDED SHEARWALLS, 2 ROWS OF 'SDS' SHALL BE STAGGERED ROWS TO BE SPACED AT 1.5" APART. EDGE DISTANCE IS 1" MINIMUM.
7. USE 1½x MIN. LSL RIM ALONG CORRIDOR WALLS.
8. WHERE COMPRESSION POSTS INTERFERE W/ ANCHOR BOLT PLACEMENT – SEE 9/S5.11

HEADER SCHEDULE[3]

OPENING SIZE	MINIMUM HEADER, U.N.O. ON PLAN	
	2x4 STUDWALL[1]	2x6 STUDWALL[2]
0 – 3'	4x6	6x6
3.1' – 6'	4x8	6x8
6.1' – 8'	4x10	6x10
8.1' – 11'	4x12	6x12

NOTE:

1. 4x HEADERS SHALL BE DOUGLAS FIR NO. 2
2. 6x HEADER SHALL BE DOUGLAS FIR NO. 1
3. CONTRACTOR SHALL VERIFY THAT WOOD HEADERS ARE FREE FROM MANUFACTURING IMPERFECTIONS.
4. SEE 2/S6.40 FOR TRIMMER & KING.
5. AT STAGGERED STUD IN 6" WALL, USE 6x HEADER. ALSO USE TRIMMER & POST FOR 6" WALL.
6. OPENING SIZE SHALL BE MEASURED FROM TRIM STUD TO TRIM STUD INTERMEDIATE WINDOW POSTS SHALL NOT BE CONSIDERED DURING SIZING OF HEADER EXCEPT WHERE THESE POSTS ARE SPECIFIED ON PLAN
7. WHERE ADDITIONAL SPACE IS NEEDED FOR HEADER, PROVIDE CONTINUOUS SINGLE TOP PLATE ABOVE HEADER. (PROVIDE 4'-0" MIN. PLATE SPLICE BEYOND HEADER – SEE 2/S6.40)
8. 4X4 MIN. HEADER IS ACCEPTABLE AT NON-BEARING WALL FOR OPENING WIDTH NO MORE THAN 5'-0" AND PLATE HEIGHT NO MORE 12'-0"

STUD SCHEDULE

	EXTERIOR WALL		INTERIOR WALL	MAX. PLATE HEIGHT
	6" NOMINAL	8" NOMINAL	6" NOMINAL	
1ST LEVEL	3x6 DFL NO. 1	2x8 DFL NO. 2	2x6 DFL NO. 2	25'-0" (USE 2x8 MIN. FOR HT. > 18'-0")

NOTE:

1. STUDS ARE SPACED 16" O.C., STAGGERED STUDS HAVE NET SPACING OF 8" O.C.
2. SEE 2/S6.40 FOR ADDITIONAL STUD REQUIREMENT AT WALLS WITH PARAPET
3. DO NOT PLANE STUD 1/8" OR MORE WITHOUT CHECKING WITH EOR. SISTER OF NEW STUD WILL LIKELY BE NEEDED.
4. SEE ARCHITECTURAL DRAWINGS FOR WALL THICKNESS
5. FOR ANY WALL PENETRATION THAT INTERRUPTS WALL STUDS, HEAD OUT PER 2/S6.40

INTERIOR NON-STRUCTURAL WALL		
4" NOMINAL	6" NOMINAL	MAX PLATE HEIGHT
2X4 DFL STUD GRADE @ 24" O.C.	–	13'-0"
–	2X6 DFL NO. 2 @ 24" O.C.	21'-0"

TIEDOWN SCHEDULE

MARK	SIMPSON HARDWARE	TIEDOWN POST	CAPACITY	DETAIL	NOTES
1	1-'HDQ8-SDS3' W/ ⅝"ø ALL THREAD ROD	6x6	7,630#	9/S6.41	POST TO SLAB
2	1-'HHDQ14' W/ 1"ø ALL THREAD ROD	6x6	13,710#	9/S6.41	POST TO SLAB

TYPICAL NAILING SCHEDULE

CONNECTION	NAILING
JOIST, RAFTER OR TRUSS TO TOP PLATE	3–8d TOENAILS
TOP PLATE TO STUD, END NAIL	2–16d
STUD TO 2x SOLE PLATE	4–8d, TOENAIL OR 2–16d, END NAIL
STUD TO 3x SOLE PLATE	4–8d, TOENAIL OR 2–20d (PRE–DRILL), END NAIL
DOUBLE STUDS, FACE NAIL	16d @ 24" O.C.
BLOCKING BETWEEN JOISTS OR RAFTERS TO TOP PLATE	3–8d TOENAIL OR 16d END NAIL (TOP & BOTTOM)
RIM JOIST TO TOP PLATE, TOENAIL	8d @ 6" O.C.
CONTINUOUS HEADER TO STUD, TOENAIL	4–8d

NOTES

1. NAILING REQUIREMENTS SHOWN HERE ARE SUPERCEDED WHERE REQUIREMENTS OF THE STRUCTURAL DRAWINGS INDICATE DIFFERENT ATTACHMENT.
2. THE REQUIREMENTS ABOVE ARE DERIVED FROM THE 2016 CALIFORNIA BUILDING CODE CHAPTER 23, TABLE 2304.10.1. ATTACHMENTS NOT INDICATED ON THE STRUCTURAL DRAWINGS SHALL BE IN CONFORMANCE TO THESE MINIMUM REQUIREMENTS.

ABBREVIATIONS

@	AT	INFO.	INFORMATION
A.B.	ANCHOR BOLT	JT.	JOIST
A.C.I.	AMERICAN CONCRETE INSTITUTE	K.	KIP (1,000 LBS.)
A.I.S.C.	AMERICAN INSTITUTE OF STEEL CONSTRUCTION	K/FT.,K/'	KIP PER FOOT
ALT.	ALTERNATE	LG.	LONG
ARCH.	ARCHITECTURAL	L.L.	LIVE LOAD
A.S.T.M.	AMERICAN STANDARD FOR TESTING AND MATERIALS	M.B.	MACHINE BOLT
A.W.S.	AMERICAN WELDING SOCIETY	M.D.	MID–DEPTH
(B)	BOTTOM	MATL.	MATERIAL
BLDG.	BUILDING	MAX.	MAXIMUM
C.G.S.	CENTROID OF TENDON	MECH.	MECHANICAL
C.I.P.	CAST–IN–PLACE CONCRETE	MFR.	MANUFACTURER
C.J.	CONSTRUCTION JOINT	MIN.	MINIMUM
℄	CENTERLINE	MISC.	MISCELLANEOUS
CLG.	CEILING	N.A.	NEUTRAL AXIS
CLR.	CLEAR	NO., #	NUMBER
C.M.U.	CONCRETE MASONRY UNIT	N.T.S.	NOT TO SCALE
COL.	COLUMN	O.C.	ON CENTER
CONC.	CONCRETE	O.H.	OPPOSITE HAND
CONT.	CONTINUOUS	O.F.	OUTSIDE FACE
CTR.	CENTER	⅊	PROPERTY LINE, PLATE
CU FT.	CUBIC FOOT	P.S.F.	POUND PER SQUARE FOOT
CU. IN.	CUBIC INCH	P.S.I.	POUND PER SQUARE INCH
CU. YD.	CUBIC YARD	P.T.	POST–TENSIONING
d_b	BAR DIAMETER	R.	RADIUS
DBL.	DOUBLE	R.D.	ROOF DRAIN
DET.	DETAIL	REF.	REFERENCE
DIA. ø	DIAMETER	REINF.	REINFORCE(D)/REINFORCING
DIAG.	DIAGONAL	REQD.	REQUIRED
DIM.	DIMENSION	S.A.D.	SEE ARCHITECTURAL DRAWINGS
D.L.	DEAD LOAD	SEAONC	STRUCTURAL ENGINEERS ASSOCIATION OF NORTHERN CALIFORNIA
DN.	DOWN		
DWG.(S)	DRAWING(S)	SEC.	SECTION
EA.	EACH	SIM.	SIMILAR
E.F.	EACH FACE	S.J.	SLAB JOINT
EL.	ELEVATION	S.O.G.	SLAB ON GRADE
ELEV.	ELEVATOR	SPECS.	SPECIFICATIONS
EQ.	EQUAL(LY)	SQ.	SQUARE
E.S.	EACH SIDE	STD.	STANDARD
E.W.	EACH WAY	STR.	STRIAGHT
F.D.	FLOOR DRAIN	SYM.	SYMMETRICAL
FDN.	FOUNDATION	(T)	TOP
F.F.	FINISH FLOOR	(T&B)	TOP & BOTTOM
F.G.	FINISH GRADE	T.S.	STRUCTURAL TUBE
FLR.	FLOOR	TYP.	TYPICAL
FTG.	FOOTING	U.B.C.	UNIFORM BUILDING CODE
GA.	GAGE	U.N.O.	UNLESS NOTED OTHERWISE
G.B.	GRADE BEAM	VERT.	VERTICAL
HDR.	HEADER	V.T.	VALLEY TRUSS
HORIZ.	HORIZONTAL	W/	WITH
H.T.	HIP TRUSS	W.J.	WALL JOINT
IN.	INCH(ES)	W.P.	WATERPROOFING
I.F.	INSIDE FACE	W.W.F.	WELDED WIRE FABRIC

ROOF FRAMING NOTES

1. CONFIRM ALL DIMENSIONS AND ELEVATIONS WITH ARCHITECTURAL DRAWINGS.
2. SEE STRUCTURAL SPECIFICATIONS ON SHEET S1.1
3. PLANS SHOW ROOF FRAMING ON WALLS BELOW. – CONFIRM ALL BACKGROUND INFORMATION WITH CURRENT ARCHITECTURAL DRAWINGS.
4. PLUMBING, SPRINKLER AND MECHANICAL SUBCONTRACTOR TO COORDINATE LOCATIONS OF FLOOR/WALL PENETRATIONS WITH FRAMING SUBCONTRACTOR, SEE 1/S6.30 & 4/S6.40
5. ROOF SHEATHING SHALL BE BLOCKED (2x MIN.) 5/8" T&G SHEATHING U.N.O. W/10d @ 6" O.C. EDGES, 10d @ 12" O.C. FIELD TYP. ROOF SHEATHING SHALL BE INSTALLED WITH 4' x 8' PANELS EXCEPT AT BOUNDARIES AND CHANGES IN FRAMING WHERE MINIMUM SHEET DIMENSION SHALL BE 24" UNLESS ALL EDGES OF UNDERSIZED SHEETS ARE SUPPORTED BY FRAMING MEMBERS OR BLOCKING. SHEATHING SHALL BE INSTALLED WITH 8' SIDE PERPENDICULAR TO FRAMING AND 4' SIDES STAGGERED. PROVIDE ⅛" SPACE AT ALL PANEL END AND EDGES JOINTS. PROVIDE 2x4 (MIN U.N.O.) BLK'G W/ E.N. @ ALL RIDGES, HIPS, VALLEYS & OTHER ROOF DISCONTINUITIES.
6. FOR BEAMS, JOISTS AND POST SIZES, SEE SCHEDULES ON FRAMING PLANS. PROVIDE POSTS FOR BEAMS AT ALL BEARING WALLS.
7. FOR POSTS @ BEAMS AND TYPICAL WALL FRAMING– SEE 2/S6.40
8. FOR TYPICAL JOIST, STUD OR BEAM NOTCHING AND/OR HOLES IN TOP PLATES – SEE 3/S6.40
   FOR HOLES IN SHEARWALL RIM. – SEE 4/S6.41
   FOR HOLES IN OTHER RIMS – SEE 5/S6.41
9. TYPICAL HANGER SCHEDULE, U.N.O.

JOIST/BEAM	HANGER (DEPTH SHALL MATCH JOIST/BM DEPTH. SMALLER HANGER THAT WILL FIT IS NOT ALLOWED)
2x	'LUS' OR 'HU'
DBL 2x	'LUS' OR 'HU'
4x, 6x	'LUS' OR 'HU'
GLB	'HGUS' @ 3⅛x, 5⅛x, 6¾x GLB (12" DEEP BEAM MAX, U.N.O.)
	'HGU' @ 6¾x GLB & WIDER (12" DEEP BEAM MAX, U.N.O.)
	'HHGU' @ FOR FLOOR BEAMS W/ DEPTH GREATER THAN 12"
	(USE 'HHGUX' FOR HANGERS WITH ONE SIDE CONCEALED)
2x (PRESERVATIVE TREATED)	'LUS' W/ ZMAX COATIING. (STAINLESS STEEL IF TREATMENT OTHER THAN MCA/MCQ IS USED).

10. SEE TYPICAL NAILING SCHEDULE ON THIS SHEET FOR FRAMING CONNECTIONS NOT DEFINED OTHERWISE ON THE STRUCTURAL DRAWINGS.
11. CEILING AND ITS SHEETROCK SHALL NOT BE INSTALLED BEFORE FULL FLOOR DEAD LOAD (I.E. FLOOR & WALL FINISHES, EQPT. LOAD, ETC.) IS INSTALLED.
12. PENETRATIONS:
    FLOOR/ROOF – SEE 1/S6.30
    SHEARWALL – SEE 3/S6.40 & 4/S6.40
13. WHERE INTERSECTING WALLS INTERRUPT SHEARWALL PLYWOOD – PROVIDE SHEAR TRANSFER BLOCK PER 3/S6.41
14. AT INTERSECTING WALLS & FOR WALLS OF DIFFERENT WIDTHS, SEE 2/S6.40 FOR TOP PLATE LAP/SPLICE.
15. SEE 6/S6.41 FOR WALL SHEAR SHEATHING SPLICE @ DIFFERENT WALL THICKNESSES.
16. JOIST STICK LAYOUT IS FOR GENERAL REPRESENTATION ONLY. SEE OTHER DETAILS, NOTES & CALLOUTS FOR ADDED JOIST AND REDUCED JOIST SPACING REQUIREMENTS.
17. PROVIDE BACKING @ ALL GUARDRAILS, HANDRAILS & SCONCE LIGHT FIXTURES PER 8/S6.41 TYP., U.N.O.

JOB COPY
These plans must be kept on the job at all times.
CITY OF MORGAN HILL
BUILDING DIVISION

FRAMING LEGEND

1. DENOTES DIRECTION OF SLOPE – VERIFY SLOPE WITH ARCH. DRAWINGS
2. WALL LEGEND:
   2a. DENOTES STRUCTURAL BEARING WALL BELOW FLOOR FRAMING – SEE STUD SCHEDULE THIS SHEET
   'SHADED' WALLS REQUIRE DIFFERENT FRAMING MEMBERS – SEE STUD SCHEDULE THIS SHEET
   DENOTES WOOD BEARING WALL ABOVE FLOOR FRAMING
   ALL SHEARWALLS, WITH OR WITHOUT HATCH, ARE CONSIDERED BEARING WALLS
   2b. DENOTES TYPICAL HEADER AT WALL BELOW – SEE "HEADER SCHEDULE" U.N.O.
3. DENOTES POST LOCATION. SEE PLANS AND POST SCHEDULE FOR ADD'L LOCATIONS. PROVIDE POSTS BELOW BEAMS AT ALL BEARING WALLS. POSTS SHALL HAVE A CONTINUOUS BEARING LOAD PATH DOWN TO FOUNDATION/PODIUM LEVEL.
   – ROOF BEAMS OVER WINDOWS & DOORS CAN USE KING STUDS AS POST (POST FROM THIS SCHEDULE CAN BE OMITTED), U.N.O. ON PLANS.
4. 2W 8.0 ES
   NUMBER DENOTES SHEARWALL TYPE – SEE "SHEARWALL SCHEDULE"
   LETTER DENOTES STRAPPED SHEARWALL CONFIGURATION – SEE 1/S6.40
   DENOTES LENGTH OF WALL (FT) TO RECEIVE SHEATHING ON SIDE OF WALL SHOWN – SEE 10/S6.41
   CONTACT ENGINEER IMMEDIATELY IF REQ'D. LENGTH CANNOT BE ACHIEVED
   SEE SHEARWALL SCHEDULE (ALL SHEARWALLS ARE BEARING WALLS)
   DENOTES SHEATHING INSTALLED ON EACH SIDE OF WALL
   'w' LOWER CASE LETTER DENOTES SHEARWALL WITH CAPACITY REDUCTION DUE TO WALL HEIGHT WIDTH RATIO GREATER THAN 2:1
5. 6A
   LETTER INDICATES TIEDOWN TO ALIGN W/ OPENING (OR WALL EDGE) (OR BEAM) [A]BOVE.
   DENOTES HOLDOWN – SEE HOLDOWN SCHEDULE ON THIS SHEET. HOLDOWNS ARE SHOWN ON PLAN LEVEL WHERE THEY TERMINATE.
6. 3
   DENOTES COLLECTOR CONNECTION – SEE COLLECTOR SCHEDULE ON SHEET S6.90
7. DENOTES MECH./ELEC./PLUMBING EQUIPMENT. REFER TO MEP PLANS FOR LOCATIONS & LAYOUT.
8. +20'-0"
   DENOTES TOP OF WALL ELEVATION. CONFIRM W/ ARCH.
9. +15'-0"
   DENOTES TOP OF SHEATHING ELEVATION. CONFIRM W/ ARCH.

WESTON MILES
ARCHITECTS
17500 Depot Street, Suite #200
Morgan Hill, CA 95037
1 •408 • 779 • 6686
• Architecture • Landscape •

PEOPLES ASSOCIATES
STRUCTURAL ENGINEERS
408-957-9220 www.pase.com
San Jose, California Pleasanton, California

REGISTERED PROFESSIONAL ENGINEER
DAVE Y. LO
S 5589
Exp. 6/30/19
STRUCTURAL
STATE OF CALIFORNIA

CONSULTANT JOB NO: 17-253

REVISIONS
1 03/28/2019 PLAN REVIEW #2
2
3

STRUCTURAL WOOD SCHEDULES AND NOTES

MORGAN HILL LIBRARY ADDITION

CITY OF MORGAN HILL
660 W MAIN AVE, MORGAN HILL, CA 95037

These drawings are instruments of service and are the property of WESTON MILES ARCHITECTS, INC. All designs and other information on the drawings are for use on the specified project and shall not be used otherwise without the expressed written permission of WESTON MILES ARCHITECTS, INC.

Written dimensions on these drawings shall have precedence over scaled dimensions. Contractors shall verify and be responsible for all dimensions and conditions on the job and report any errors, inconsistencies or omissions in dimensions and conditions shown by these drawings. Shop details shall be submitted to this office for approval before proceeding with fabrication.

© Copyrighted 2019

DATE: 02/8/2019

JOB NO: 15058

S1.2

MINIMUM REBAR COVER[1]

EXPOSURE	MINIMUM COVER	INSTALLATION TOLERANCE
CAST AGAINST AND PERMANENTLY EXPOSED TO EARTH:	3"	$\frac{3}{8}$"
EXPOSED TO EARTH OR WEATHER:		
NO. 5 BAR AND SMALLER	$1\frac{1}{2}$"	$\frac{1}{4}$"
NO. 6 BAR AND LARGER	2"	$\frac{1}{4}$"
NOT EXPOSED TO WEATHER OR IN CONTACT WITH GROUND:		
STRUCTURAL SLABS & WALLS (NO. 11 BAR AND SMALLER)	1"	$\frac{1}{8}$"
BEAMS COLUMNS (PRIMARY REINFORCEMENT, TIES, STIRRUPS & SPIRALS)	$1\frac{1}{2}$"	$\frac{1}{4}$"

NOTE:
1. PROVIDE MIN. REBAR COVER PER THIS TABLE, UNLESS NOTED OTHERWISE.

REBAR HOOK DETAILS

STIRRUP & TIE HOOK DIMENSION GRADES 40–50–60 ksi

BAR SIZE	D	90° HOOK	135° HOOK	
		A	A	H (APPROX.)
#3	1 1/2"	4"	4"	2 1/2"
#4	2"	4½"	4 1/2"	3"
#5	2 1/2"	6"	5 1/2"	3 3/4"
#6	4 1/2"	1'–0"	8"	4 1/2"
#7	5 1/4"	1'–2"	9"	5 1/4"
#8	6"	1'–4"	10 1/2"	6"

135° SEISMIC STIRRUP/TIE HOOK DIMENSION ALL GRADES

BAR SIZE	D	135° HOOK	
		A	H (APPROX.)
#3	1 1/2"	4 1/4"	3"
#4	2"	4 1/2"	3"
#5	2 1/2"	5 1/2"	3 3/4"
#6	4 1/2"	8"	4 1/2"
#7	5 1/4"	9"	5 1/4"
#8	6"	10 1/2"	6"

STANDARD END HOOKS & BAR BENDING – ALL GRADES

BAR SIZE	180° HOOKS			90° HOOKS
	D	A	J	A
#3	2 1/4"	5"	3"	6"
#4	3"	6"	4"	8"
#5	3 3/4"	7"	5"	10"
#6	4 1/2"	8"	6"	1'–0"
#7	5 1/4"	10"	7"	1'–2"
#8	6"	11"	8"	1'–4"
#9	9 1/2"	1'–3"	11 3/4"	1'–7"
#10	10 3/4"	1'–5"	1'–1 1/4"	1'–10"
#11	12"	1'–7"	1'–2 3/4"	2'–0"

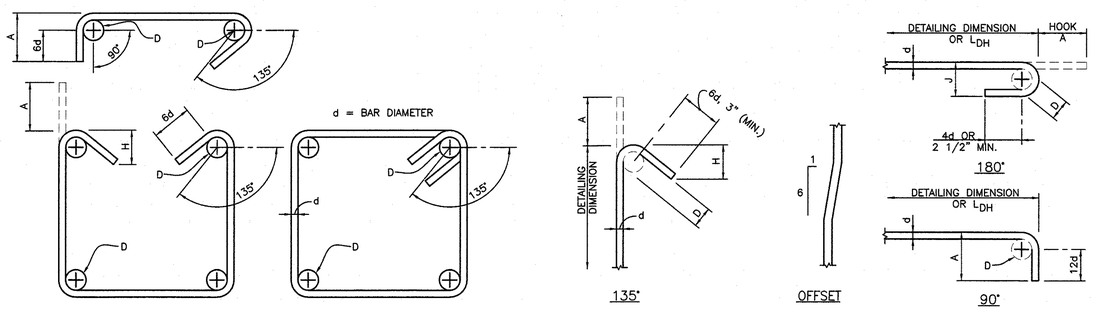

STIRRUP & TIE DETAIL

135° SEISMIC STIRRUP/TIE HOOK

STANDARD END HOOKS & BAR BENDING – ALL GRADES

REINFORCEMENT DEVELOPMENT & LAP SPLICE LENGTHS

	f'c = 2500 psi, Fy=60ksi					f'c = 3000 psi, Fy=60ksi					f'c = 4000 psi, Fy=60ksi					f'c = 5000 psi, Fy=60ksi				
BAR NO.	L_D(IN)	L_T(IN)	L_{SB}(IN)	L_{ST}(IN)	L_{DH}(IN)	L_D(IN)	L_T(IN)	L_{SB}(IN)	L_{ST}(IN)	L_{DH}(IN)	L_D(IN)	L_T(IN)	L_{SB}(IN)	L_{ST}(IN)	L_{DH}(IN)	L_D(IN)	L_T(IN)	L_{SB}(IN)	L_{ST}(IN)	L_{DH}(IN)
3	18	24	24	32	9	17	22	23	29	9	15	19	20	25	8	13	17	17	23	7
4	24	32	32	42	12	22	29	29	38	11	19	25	25	33	10	17	23	23	30	9
5	30	39	39	51	15	28	36	37	47	14	24	31	32	41	12	22	28	29	37	11
6	36	47	47	62	18	33	43	43	56	17	29	37	38	49	15	26	34	34	45	13
7	53	69	69	90	21	48	63	63	82	20	42	54	55	71	17	38	49	50	64	15
8	60	78	78	102	24	55	72	72	94	22	48	62	63	81	19	43	56	56	73	17
9	68	88	88	115	28	62	81	81	106	25	54	70	71	91	22	48	63	63	82	20
10	77	100	100	130	31	70	91	91	119	28	61	79	80	103	25	54	71	71	93	22

NOTES:
1. REINFORCEMENT DEVELOPMENT AND SPLICE LENGTHS ARE IN ACCORDANCE WITH ACI 318–11.
2. NOTATIONS:

L_D : TENSION DEVELOPMENT LENGTH (IN) FOR REINFORCEMENT SATISFYING THE FOLLOWING REQUIREMENTS:
SLABS AND WALLS: CLEAR SPACING > 2db, AND CONCRETE CLEAR COVER > db
BEAMS AND COLUMNS: CLEAR SPACING > db, AND CONCRETE CLEAR COVER > db

L_T : TENSION DEVELOPMENT LENGTH (IN) FOR TOP BARS

L_{SB} : TENSION LAP SPLICE LENGTH FOR OTHER THAN TOP BARS (IN)

L_{ST} : TENSION LAP SPLICE LENGTH OF TOP BARS WITH MORE THAN 12" OF CONCRETE CAST BELOW (IN)

L_{DH} : TENSION DEVELOPMENT HOOK LENGTH (IN)

3. MULTIPLY VALUES IN THE TABLE BY 1.5 IF CLEAR SPACING OR CONCRETE COVER DO NOT MEET THE REQUIREMENTS FOR L_D IN NOTE 2.
4. LAP SPLICE LENGTHS L_{SB} & L_{ST} ARE FOR CLASS B SPLICES.

FOUNDATION NOTES

1. CONFIRM ALL DIMENSIONS AND ELEVATIONS WITH ARCHITECTURAL DRAWINGS
2. SEE STRUCTURAL SPECIFICATIONS SHEET S1.1
3. SEE FRAMING LEGEND ON SHEET S1.2
4. PLANS SHOW BOTTOM PLATE OF STRUCTURAL WALLS ABOVE ON FOOTING. – CONFIRM ALL BACKGROUND INFORMATION WITH CURRENT ARCHITECTURAL DRAWINGS.
5. ⟶ DENOTES SLOPING SLAB – SEE ARCH. DRAWING FOR ELEVATIONS.
6. SLAB SECTION:
   – CONC. SLAB – SEE PLAN FOR THICKNESS & REINFORCEMENT.
   – STEGO WRAP VAPOR BARRIER (15 MIL.) (DELETE @ EXTERIOR SLABS)
   – 4" OF CAPILLARY BREAK – SEE SOILS REPORT
   – PROPERLY PREPARED SUBGRADE – SEE SOILS REPORT
   – 14" NON–EXPANSIVE FILL – SEE SOILS REPORT.
7. WHERE PIPES PASS UNDER OR ADJACENT TO FOOTINGS, SEE 4/S5.11 & 5/S5.11
8. DENOTES STEPPED SLAB – SEE ARCH. DRAWINGS FOR ELEVATIONS.
9. FOR TYPICAL CONSTRUCTION JOINTS IN FOOTINGS – SEE 2/S5.11
10. FOR CORNERS & INTERSECTIONS – SEE 3/S5.11
11. FOR POST SIZES SUPPORTING BEAMS ABOVE – SEE POST SCHEDULE ON FRAMING PLANS
12. SEE TYPICAL NAILING SCHEDULE ON SHEET S1.2 FOR FRAMING CONNECTIONS NOT DEFINED OTHERWISE ON THE STRUCTURAL DRAWINGS.
13. [218.5] / [221.0] DENOTES STEP IN FOOTING
14. X'–X" DENOTES TOP OF SLAB ELEVATION
15. [XX.XX] DENOTES TOP OF FOOTING ELEVATION
16. THE CONTRACTOR SHALL INFORM THE ENGINEER IN WRITING OF ANY DISCREPANCIES OR OMISSIONS NOTED ON THE DRAWINGS OR OF ANY VARIATIONS NEEDED IN ORDER TO CONFORM TO CODES, RULES AND REGULATIONS. UPON RECEIPT OF SUCH INFORMATION, THE ENGINEER WILL SEND WRITTEN INSTRUCTIONS TO ALL CONCERNED.
17. SEE ARCHITECTURAL, ELECTRICAL, AND MECHANICAL DRAWINGS FOR SIZE AND LOCATION OF PIPE, VENT, DUCT AND OTHER OPENINGS AND DETAILS NOT SHOWN ON THESE STRUCTURAL DRAWINGS. ALL DIMENSIONS ARE TO BE CHECKED AND VERIFIED WITH THE ARCHITECTURAL DRAWINGS.
18. THE CONTRACTOR SHALL ADEQUATELY PROTECT HIS WORK, ADJACENT PROPERTY AND THE PUBLIC AND BE RESPONSIBLE FOR DAMAGE OR INJURY DUE TO HIS ACT OR NEGLECT.
19. THE CONCRETE AND FRAMING CONTRACTORS SHALL COORDINATE THEIR WORK.
20. CONTRACTOR TO FIELD VERIFY ALL EXISTING CONDITION PRIOR TO CONNECTION ANY WORK. NOTIFY ENGINEER OF ALL DISCREPANCIES.
21. FOR TYPICAL CRACK CONTROL JOINT & SLAB CONSTRUCTION JOINT – SEE 1/S5.11
22. DENOTES MAT OF MILD REINFORCEMENT.
23. ### (T) – DENOTES ADD'L BAR WITH NUMBER, BAR SIZE, LENGTH & SPACING AS SHOWN
   – (T) MEANS TOP BAR
   – (B) MEANS BOTTOM BAR
24. ALL STEEL POSTS & STEEL BEAMS WILL HAVE INTUMESCENT PAINT FIRE PROTECTION – VERIFY WITH ARCHITECT
25. HOLDOWN ANCHORS SHALL BE RE–TIGHTENED JUST PRIOR TO COVERING THE WALL FRAMING.
26. ALL HOLDOWN ANCHORS SHALL BE TIED IN PLACE PRIOR TO CALLING FOUNDATION INSPECTION
27. DENOTES 24"ø x 20'–0" DEEP FOUNDATION PIER – SEE C/S5.10
   DENOTES 24"ø x 10'–0" DEEP FOUNDATION PIER – SEE C/S5.10

JOB COPY
These plans must be kept on the job at all times.
CITY OF MORGAN HILL
BUILDING DIVISION

WESTON MILES
ARCHITECTS
17500 Depot Street, Suite #200
Morgan Hill, CA 95037
1 •408 • 779 • 6686
• Architecture • Landscape •

PEOPLES ASSOCIATES
STRUCTURAL ENGINEERS
408-967-6220 San Jose, California • www.pase.com Pleasanton, California

REGISTERED PROFESSIONAL ENGINEER
DAVE Y. LO
S 5589
Exp. 6/30/19
STRUCTURAL
STATE OF CALIFORNIA

CONSULTANT JOB NO: 17-253

REVISIONS
1 03/28/2019 PLAN REVIEW #2
2
3

STRUCTURAL CONCRETE SCHEDULES AND NOTES

MORGAN HILL LIBRARY ADDITION

CITY OF MORGAN HILL
660 W MAIN AVE, MORGAN HILL, CA 95037

These drawings are instruments of service and are the property of WESTON MILES ARCHITECTS, INC. All designs and other information on the drawings are for use on the specified project only and are not to be reproduced without the expressed written permission of WESTON MILES ARCHITECTS, INC.

Written dimensions on these drawings shall have precedence over scale measurements. Contractor shall be fully responsible for all dimensions and conditions on the job and this office shall be notified of any variations from the dimensions and conditions shown by these drawings. Shop details shall be submitted to this office for approval before proceeding with fabrication.

© Copyright 2019

DATE: 02/8/2019

JOB NO: 15058

S1.3

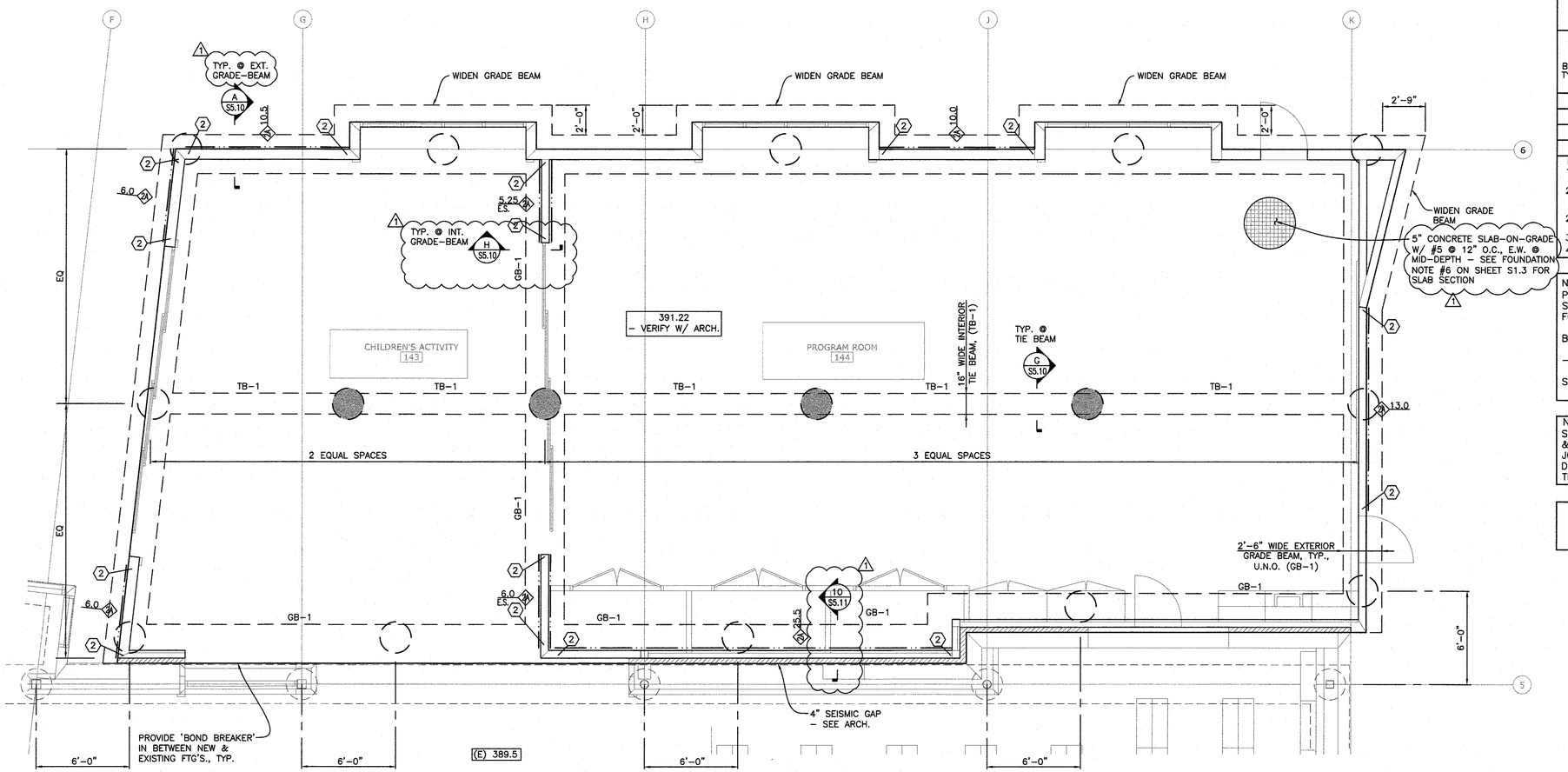

FOUNDATION PLAN
1/4"=1'-0"

N

BEAM SCHEDULE

MARK [1]	SIZE & MATERIAL [2]	MARK [1]	SIZE & MATERIAL [2]
B59	5½x9 GLB.	B518	5½x18 GLB.
B512	5½x12 GLB.	B524	5½x24 GLB.

NOTES:
1. B59D* — SEE NOTE 7
   - DENOTES BEAM FEATURE – SEE DETAIL BELOW AND PLAN
   - ALL BEAMS ARE FLUSHED U.N.O.
   - 'D' DENOTES DROPPED
   - 'U' DENOTES UPSET
   - 'E' DENOTES EXPOSED BEAM
   - 'H' DENOTES HEADER – SEE WALL FRAMING
   - INDICATES MEMBER DIMENSIONS
2. SEE STRUCTURAL SPECIFICATIONS
3. FOR FLUSH BEAMS WITH DEPTHS LESS THAN FLOOR JOISTS (E.G. GLB's) PROVIDE FILLER PLYWOOD OVER TOP OF BEAM W/ 2 ROWS 10d @ 12" O.C. STAGGERED NAILING
4. SEE S1.2 FOR BEAM HANGER

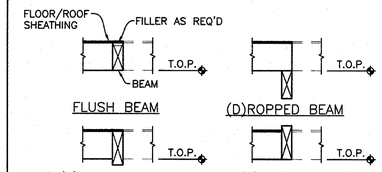

POST/COLUMN SCHEDULE

MARK	SUPPORTED BEAM/HEADER SIZE	POST SIZE		
		8x WALL	6x WALL	4x WALL
'P' AND @ BEAM ENDS TYP., U.N.O.	4x, 3½x GLB./LSL	4x8 DF#1	4x6 DF#1	4x4 DF#1
	6x, 5½x GLB./LSL/PSL	6x8 DF#1	6x6 DF#1	4x6 DF#1
	6¾x OR 8¾x GLB	6x8 DF#1	6x8 DF#1	4x8 DF#1
	10¾x GLB.	6x10 DF#1	6x10 DF#1	4x12 DF#1
C55	SEE FRAMING PLAN	HSS5x5x¼		
C66		HSS6x6x¼		
P66		–	6x6 DF#1	–
P68		6x8 DF#1		–

NOTES:
1. PROVIDE POSTS AT EACH BEAM/HEADER BEARING POINT.
2a. SEE 2/S6.40 FOR PLACEMENT OF POST WITHIN STUDWALLS AND FOR POST CAP REQUIREMENT
2b. SEE 7/S6.41 WHERE POST OCCURS AT SHEAR WALL TIEDOWN.
3. BEAM/HEADER SIZES PER FRAMING PLAN
4. SAWN LUMBER POSTS SHALL BE DF#1 MATERIAL.

NOTE: ADD POST @ EACH BEAM END. PER POST/COLUMN SCHEDULE, POST SHALL BE CONTINUOUS DOWN TO FOUNDATION. PROVIDE SOLID FLOOR BLOCKING AT EVERY POST LOCATION – SEE 2/S6.40 TRIMMER POST TO MATCH STUD SIZE PER SCHEDULE – SEE 2/S6.40

NOTE:
SEE ARCH. DRAWINGS FOR RECESSED LIGHT LOCATIONS & MECH. DRAWINGS FOR DUCT LOCATIONS. LOCATE JOIST TO ALLOW SPACE FOR RECESSED LIGHTS, MECH. DUCT AND ALL OTHER UTILITIES WITHOUT EXCEEDING THE MAXIMUM SPACING PER PLAN.

NOTE:
SEE SHEET A7.1 FOR CURB PLAN

JOB COPY
These plans must be kept on the job at all times.
CITY OF MORGAN HILL
BUILDING DIVISION

WESTON MILES
ARCHITECTS
17500 Depot Street, Suite #200
Morgan Hill, CA 95037
1 • 408 • 779 • 6686
• Architecture • Landscape •

PEOPLES ASSOCIATES
STRUCTURAL ENGINEERS
408-957-9220 San Jose, California
www.pase.com Pleasanton, California

REGISTERED PROFESSIONAL ENGINEER
DAVE Y. LO
S 5589
Exp. 6/30/19
STRUCTURAL
STATE OF CALIFORNIA

CONSULTANT JOB NO: 17-253

REVISIONS
1 — 03/28/2019 PLAN REVIEW #2
2
3

FOUNDATION PLAN

MORGAN HILL LIBRARY ADDITION

CITY OF MORGAN HILL
660 W MAIN AVE, MORGAN HILL, CA 95037

These drawings are instruments of service and are the property of WESTON MILES ARCHITECTS, INC. All designs and other information on the drawings are for use on the specified project and shall not be used otherwise without the expressed written permission of WESTON MILES ARCHITECTS, INC.

Written dimensions on these drawings shall have precedence over scaled dimensions. Contractors shall verify and be responsible for all dimensions and conditions on the job and this office shall be notified of any variations from the dimensions and conditions shown by these drawings. Shop details shall be submitted to this office for approval before proceeding with fabrication.

© Copyrighted 2019

DATE: 02/8/2019

JOB NO: 15058

S2.0

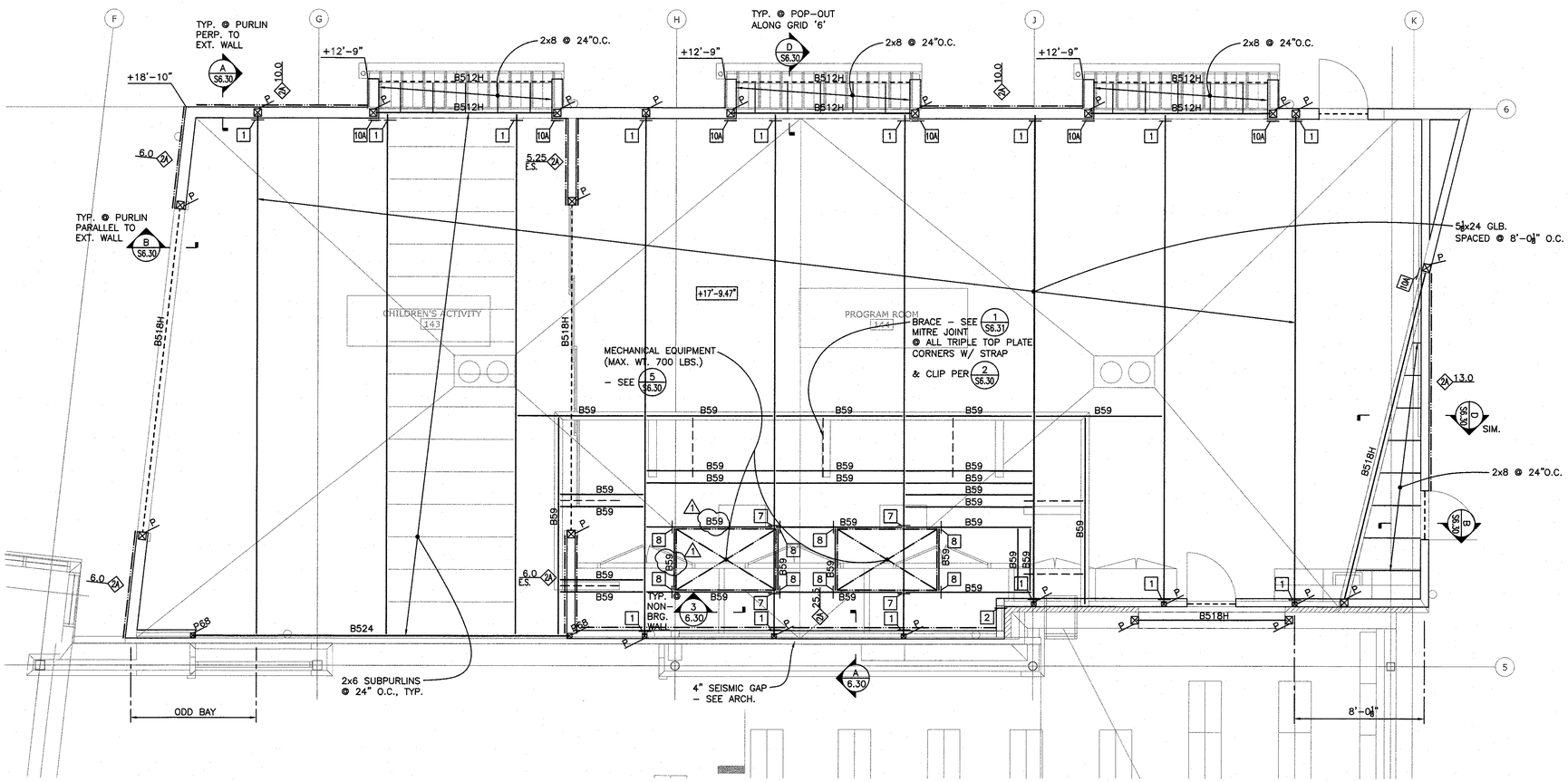

ROOF FRAMING PLAN

1/4"=1'-0"

N

ROOF FRAMING NOTES

1. CONFIRM ALL DIMENSIONS AND ELEVATIONS WITH ARCHITECTURAL DRAWINGS.
2. SEE STRUCTURAL SPECIFICATIONS ON SHEET S1.1.
3. FOR TYP. WOOD FRAME & DETAILS – SEE S6.30

BEAM SCHEDULE

MARK [1]	SIZE & MATERIAL [2]	MARK [1]	SIZE & MATERIAL [2]
B59	5⅛x9 GLB.	B518	5⅛x18 GLB.
B512	5⅛x12 GLB.	B524	5⅛x24 GLB.

NOTES:
1. B59D* — SEE NOTE 7
   - D — DENOTES BEAM FEATURE – SEE DETAIL BELOW AND PLAN
   - ALL BEAMS ARE FLUSHED U.N.O.
   - 'D' DENOTES DROPPED
   - 'U' DENOTES UPSET
   - 'E' DENOTES EXPOSED BEAM
   - 'H' DENOTES HEADER – SEE WALL FRAMING
   - 59 — INDICATES MEMBER DIMENSIONS
2. SEE STRUCTURAL SPECIFICATIONS
3. FOR FLUSH BEAMS WITH DEPTHS LESS THAN FLOOR JOISTS (E.G. GLB's) PROVIDE FILLER PLYWOOD OVER TOP OF BEAM W/ 2 ROWS 10d @ 12" O.C. STAGGERED NAILING
4. SEE S1.2 FOR BEAM HANGER

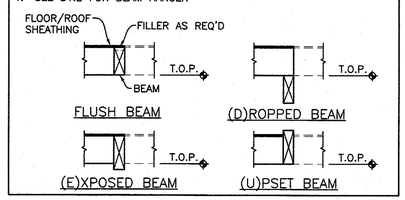

POST/COLUMN SCHEDULE

MARK	SUPPORTED BEAM/HEADER SIZE	POST SIZE		
		8x WALL	6x WALL	4x WALL
'P' AND @ BEAM ENDS TYP., U.N.O.	4x, 3½x GLB./LSL	4x8 DF#1	4x6 DF#1	4x4 DF#1
	6x, 5⅛x GLB./LSL/PSL	6x8 DF#1	6x6 DF#1	4x6 DF#1
	6¾x OR 8¾x GLB	6x8 DF#1	6x8 DF#1	4x8 DF#1
	10¾x GLB.	6x10 DF#1	6x10 DF#1	4x12 DF#1
C55	SEE FRAMING PLAN	HSS5x5x¼		
C66		HSS6x6x¼		
P66		–	6x6 DF#1	–
P68		6x8 DF#1		–

N O T E S:
1. PROVIDE POSTS AT EACH BEAM/HEADER BEARING POINT.
2a. SEE 2/S6.40 FOR PLACEMENT OF POST WITHIN STUDWALLS AND FOR POST CAP REQUIREMENT
2b. SEE 7/S6.41 WHERE POST OCCURS AT SHEAR WALL TIEDOWN.
3. BEAM/HEADER SIZES PER FRAMING PLAN
4. SAWN LUMBER POSTS SHALL BE DF#1 MATERIAL.

NOTE: ADD POST @ EACH BEAM END. PER POST/COLUMN SCHEDULE. POST SHALL BE CONTINUOUS DOWN TO FOUNDATION. PROVIDE SOLID FLOOR BLOCKING AT EVERY POST LOCATION – SEE 2/S6.40 TRIMMER POST TO MATCH STUD SIZE PER SCHEDULE – SEE 2/S6.40

NOTE:
SEE ARCH. DRAWINGS FOR RECESSED LIGHT LOCATIONS & MECH. DRAWINGS FOR DUCT LOCATIONS. LOCATE JOIST TO ALLOW SPACE FOR RECESSED LIGHTS, MECH. DUCT AND ALL OTHER UTILITIES WITHOUT EXCEEDING THE MAXIMUM SPACING PER PLAN.

JOB COPY
These plans must be kept on the job at all times.
CITY OF MORGAN HILL
BUILDING DIVISION

WESTON MILES
ARCHITECTS
17500 Depot Street, Suite #200
Morgan Hill, CA 95037
1 •408 • 779 • 6686
• Architecture • Landscape •

PEOPLES ASSOCIATES
STRUCTURAL ENGINEERS
408-867-8220 • www.pase.com
San Jose, California • Pleasanton, California

REGISTERED PROFESSIONAL ENGINEER
DAVE Y. LO
S 5589
Exp. 6/30/19
STRUCTURAL
STATE OF CALIFORNIA

CONSULTANT JOB NO: 17-253

REVISIONS
1 — 03/28/2019 PLAN REVIEW #2
2
3

ROOF FRAMING PLAN

MORGAN HILL LIBRARY ADDITION

CITY OF MORGAN HILL
660 W MAIN AVE, MORGAN HILL, CA 95037

These drawings are instruments of service and are the property of WESTON MILES ARCHITECTS, INC. All designs and other information on the drawings are for use on the specified project and shall not be used otherwise without the expressed written permission of WESTON MILES ARCHITECTS, INC.

Written dimensions on these drawings shall have precedence over scaled dimensions. Contractors shall verify and be responsible for all dimensions and conditions on the job and this office shall be notified of any variations from the dimensions and conditions shown by these drawings. Shop details shall be submitted to this office for approval before proceeding with fabrication.

© Copyrighted 2019

DATE: 02/8/2019

JOB NO: 15058

S2.1

GRADE BEAM SCHEDULE							
MARK	'H'	'B'	BOTTOM BARS	TOP BARS	SIDE BARS	STIRRUPS	REMARKS
GB–1	32"	30"	(5)–#7	(5)–#7	(2)–#6	#4@12	ADD'L. (2)–#7 T&B AT WIDENED GRADE BEAM
GB–2	32"	30"	(4)–#7	(4)–#7	(2)–#6	#4@12	ADD'L. (2)–#7 T&B AT WIDENED GRADE BEAM

NOTES:
1. SEE FOUNDATION PLAN FOR GRADE BEAM MARKS, LOCATIONS AND TOP OF CONCRETE ELEVATION.

NOTE: SEE ARCH. FOR ANY SPECIAL REQUIREMENTS @ DOORS

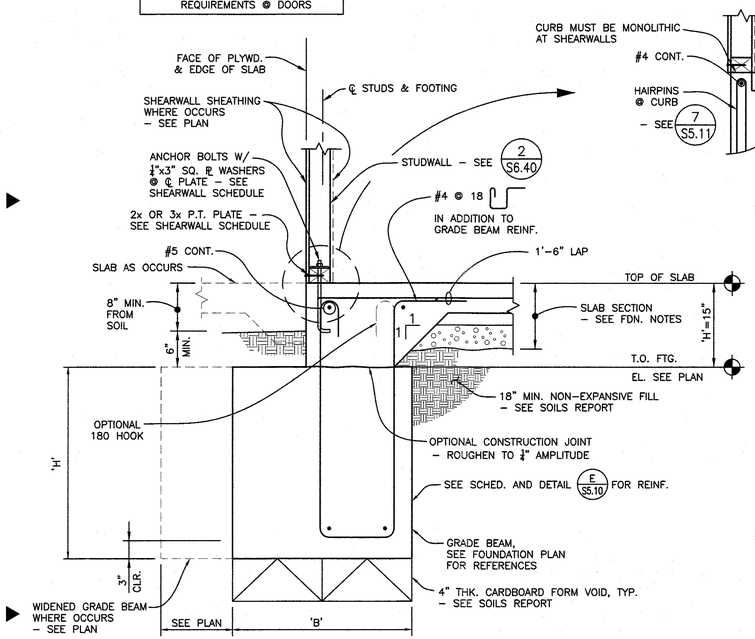

SECTION A 3/4"=1'–0" S5.10

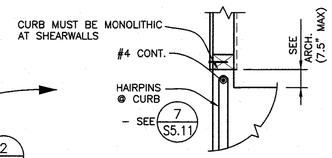

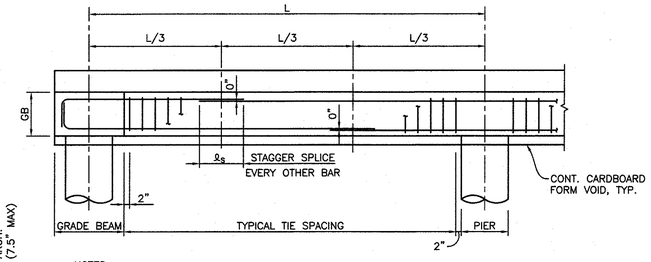

NOTES:
1. MAKE LONGITUDINAL BARS AS LONG AS PRACTICAL, STAGGER LAP SPLICES.
2. LOCATE GRADE BEAM REINFORCING TO CLEAR PIER REINFORCING, ANCHOR BOLTS AND PIPE SLEEVES. SEE STRUCTURAL DETAILS AND PLUMBING DRAWINGS, TYPICAL.

SECTION B N.T.S. S5.10

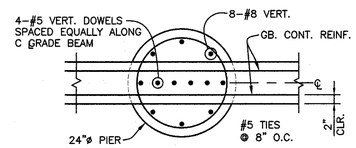

DRILLED PIER AT GRADE BEAM

NOTE:
THE TOPS OF PIERS SHOULD BE PREVENTED FROM "MUSHROOMING" BY PLACING SONOTUBES WITHIN THE UPPER 4'–0" OF THE PIER EXCAVATIONS – SEE SOILS ENGINEER RECOMMENDATION

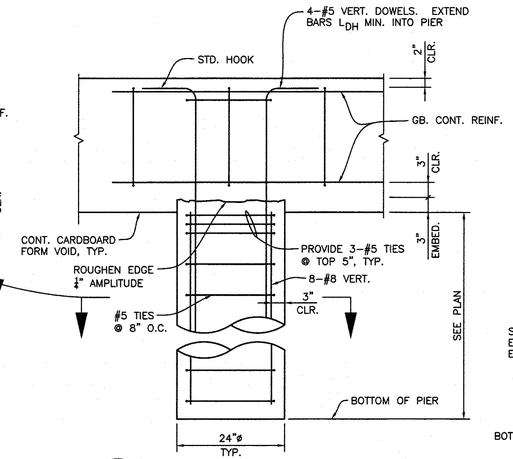

SECTION C 3/4"=1'–0" S5.10

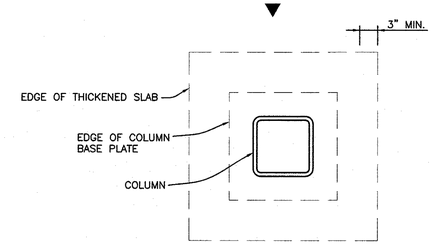

PLAN

SLAB SHALL BE CAST AFTER STEEL IS ERECTED AND GROUTED IF THIS DETAIL IS USED.

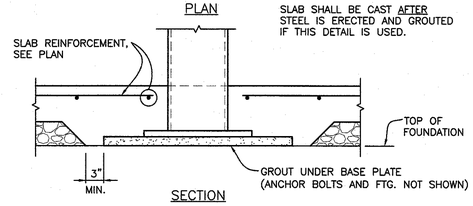

SECTION

SECTION D 1"=1'–0" S5.10

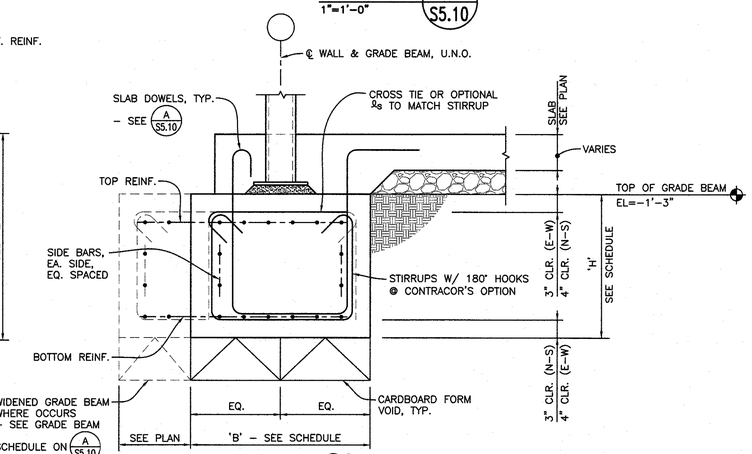

SECTION E 1"=1'–0" S5.10

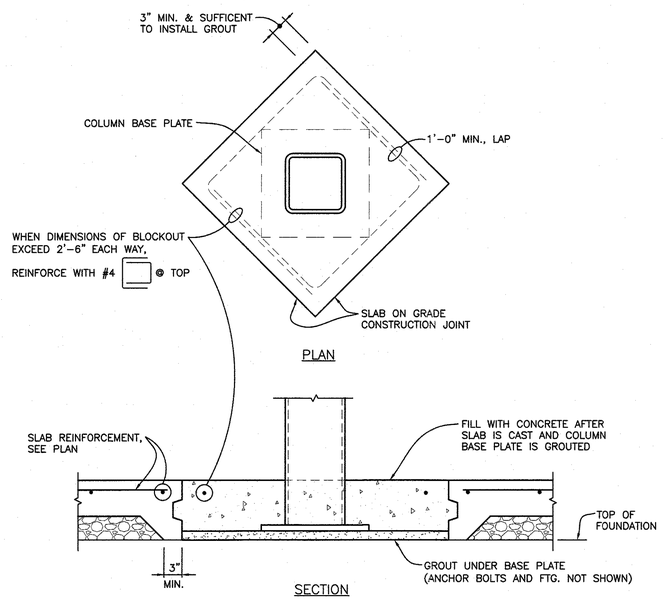

SECTION F 1"=1'–0" S5.10

TIE BEAM SCHEDULE			
MARK	B, IN.	D, IN.	LONGITUDINAL REINF.
TB–1	16	24	(4)–#7's T&B

NOTES;
1. SEE PLAN SHEET S2.0 FOR TIE BEAM MARKS.
2. REPRESENTATIVE SECTIONS THRU TIE BEAMS ARE SHOWN BELOW.
3. OTHER COMBINATIONS OF T.O. SLAB ELEVATION/TIE BEAM TYPE MAY OCCUR.
4. SEE C/S5.0 FOR TIE BEAM DOWELED CONNECTIONS TO PIER.

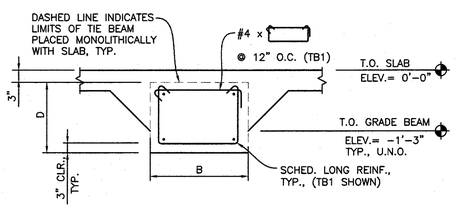

TIE BEAM CONDITION AT TYPICAL T.O. SLAB

SECTION G N.T.S. S5.10

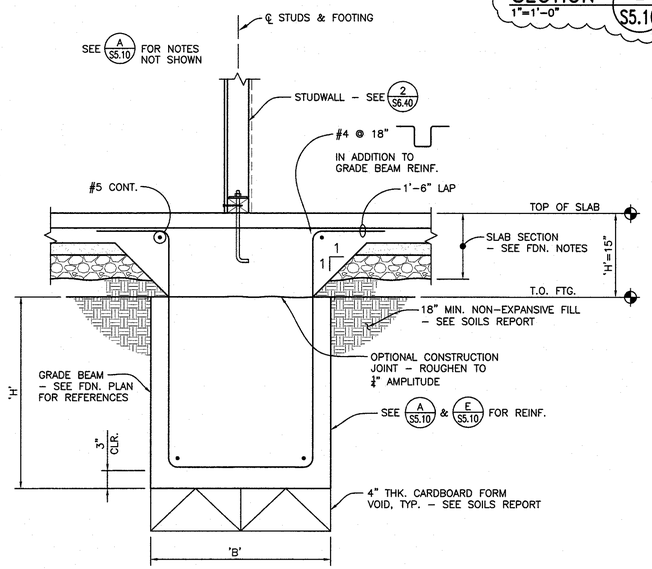

SECTION H 3/4"=1'–0" S5.10

JOB COPY
These plans must be kept on the job at all times.
CITY OF MORGAN HILL BUILDING DIVISION

WESTON MILES ARCHITECTS
17500 Depot Street, Suite #200
Morgan Hill, CA 95037
1 • 408 • 779 • 6686
• Architecture • Landscape •

PEOPLES ASSOCIATES STRUCTURAL ENGINEERS
408-957-0220 www.pase.com
San Jose, California Pleasanton, California

REGISTERED PROFESSIONAL ENGINEER DAVE Y. LO S 5589 Exp. 6/30/19 STRUCTURAL STATE OF CALIFORNIA

CONSULTANT JOB NO: 17-253

REVISIONS
1 03/28/2019 PLAN REVIEW #2
2
3

FOUNDATION SECTIONS AND DETAILS

MORGAN HILL LIBRARY ADDITION

CITY OF MORGAN HILL
660 W MAIN AVE, MORGAN HILL, CA 95037

These drawings are instruments of service and are the property of WESTON MILES ARCHITECTS, INC. All designs and other information on the drawings are for use on the specified project and shall not be used otherwise without the expressed written permission of WESTON MILES ARCHITECTS, INC.

Written dimensions on these drawings shall have precedence over scaled dimensions. Contractors shall verify and be responsible for all dimensions and conditions on the job and the office shall be notified of any variations from the dimensions and conditions shown by these drawings. Shop details shall be submitted to this office for approval before proceeding with fabrication.

© Copyrighted 2019

DATE: 02/8/2019

JOB NO: 15058

S5.10

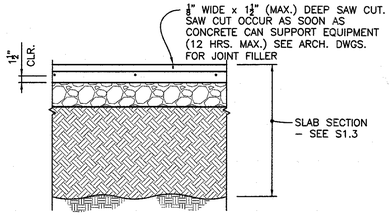

CRACK CONTROL JOINT

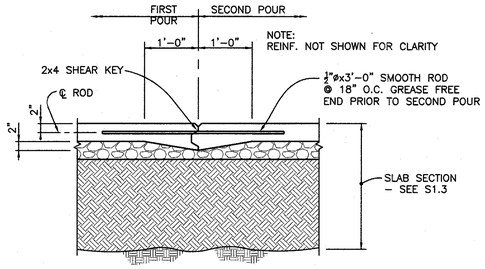

SLAB ON GRADE CONSTRUCTION JOINT

DETAIL 1 / S5.11
3/4"=1'–0"

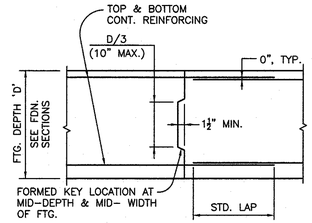

DETAIL 2 / S5.11
3/4"=1'–0"

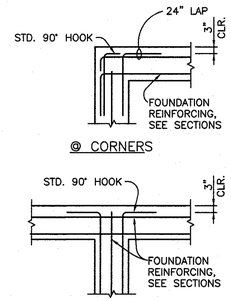

DETAIL 3 / S5.11
N.T.S.

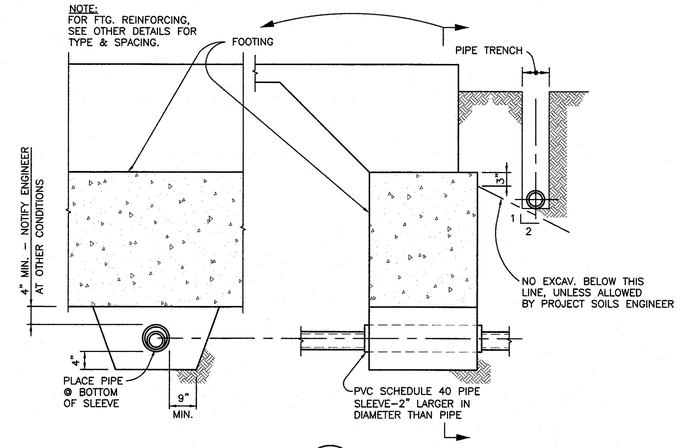

DETAIL 4 / S5.11
N.T.S.

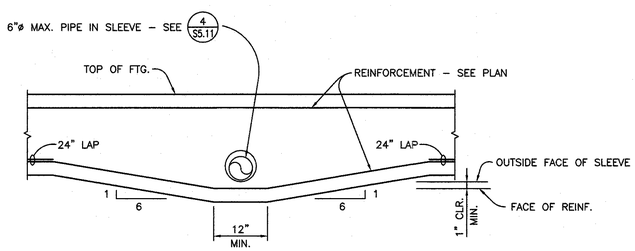

USE THIS DETAIL WHERE SLEEVE INTERFERES WITH LOWER REINF. TO THE POINT WHERE THE SLEEVE IS CLEAR ABOVE THE TYPICAL LOCATION OF THE REINF. BY 1".

CONDITION I

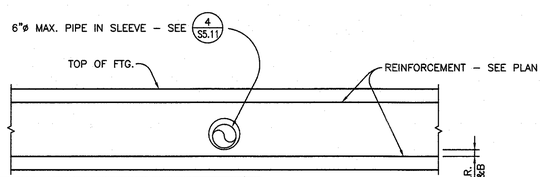

USE THIS DETAIL WHERE SLEEVE PASSES THRU CENTER OF FTG. AND CAN REMAIN CLEAR OF T&B REINF. BY 1" MIN. W/O ALTERING LOCATION

CONDITION II

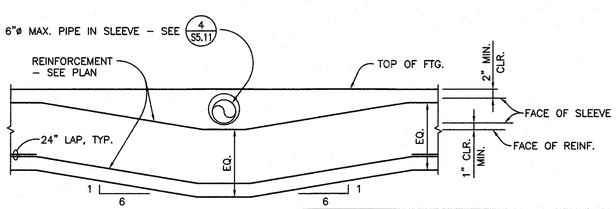

CONDITION III

USE THIS DETAIL WHERE SLEEVE INTERFERES W/ TOP REINF. THICKEN FTG. TO MAINTAIN DEPTH OF TOP REINF.

DETAIL 5 / S5.11
3/4"=1'–0"

NOTE:
CONTRACTOR SHALL COORDINATE SIZE AND LOCATION OF FOOTING STEPS WITH THE CIVIL DRAWINGS.

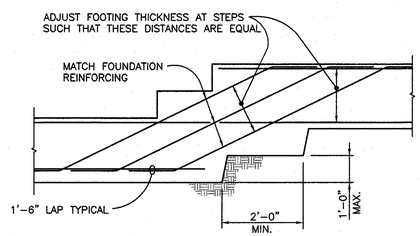

DETAIL 6 / S5.11
3/4"=1'–0"

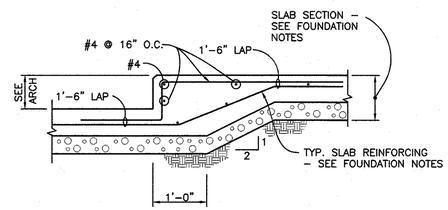

SLAB–ON–GRADE

DETAIL 8 / S5.11
3/4"=1'–0"

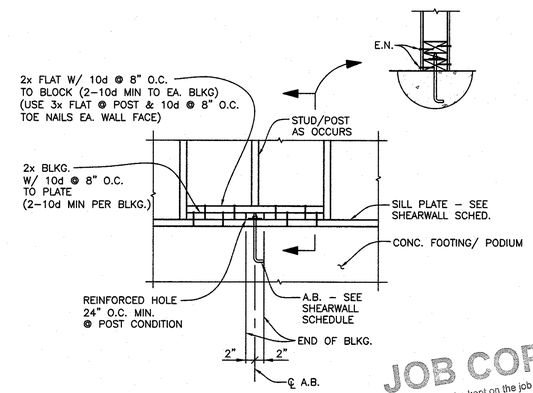

SECTION 9 / S5.11
3/4"=1'–0"

JOB COPY
These plans must be kept on the job at all times.
CITY OF MORGAN HILL BUILDING DIVISION

NOTE:
SEE ARCH. DWG. FOR CURB DIMENSIONS.

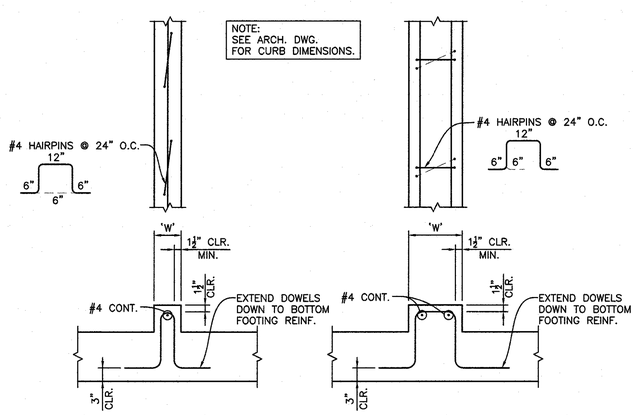

4" ≤ 'W' ≤ 8" 8" < 'W' ≤ 16"

CURB DETAILS (MUST BE MONOLITHIC @ SHEARWALLS)

DETAIL 7 / S5.11
3/4"=1'–0"

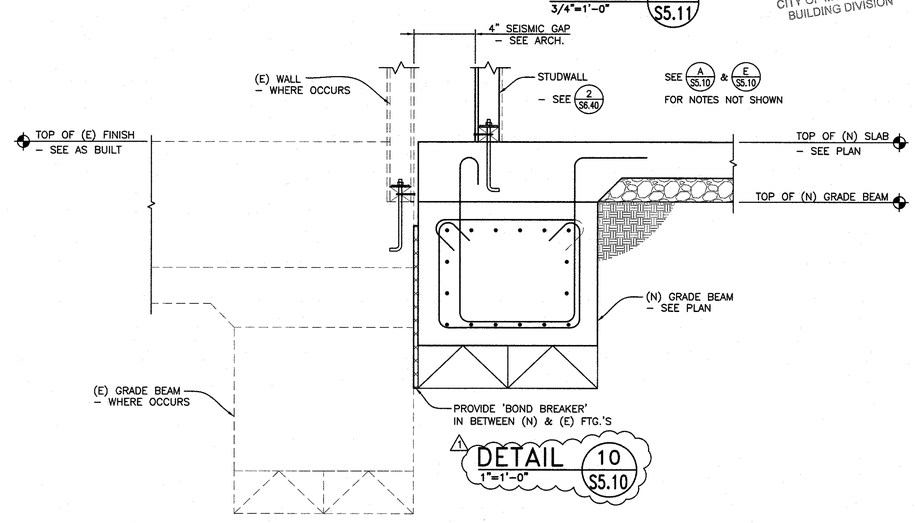

DETAIL 10 / S5.10
1"=1'–0"

WESTON MILES
ARCHITECTS
17500 Depot Street, Suite #200
Morgan Hill, CA 95037
1 •408 • 779 • 6686
• Architecture • Landscape •

PEOPLES ASSOCIATES
STRUCTURAL ENGINEERS
408-957-9220 San Jose, California
www.pase.com Pleasanton, California

REGISTERED PROFESSIONAL ENGINEER DAVE Y. LO S 5589 Exp. 6/30/19 STRUCTURAL STATE OF CALIFORNIA

CONSULTANT JOB NO: 17-253

REVISIONS
1 03/28/2019 PLAN REVIEW #2
2
3

FOUNDATION SECTIONS AND DETAILS

MORGAN HILL LIBRARY ADDITION

CITY OF MORGAN HILL
660 W MAIN AVE, MORGAN HILL, CA 95037

These drawings are instruments of service and are the property of WESTON MILES ARCHITECTS, INC. All designs and other information on the drawings are for use on the specified project and shall not be used otherwise without the expressed written permission of WESTON MILES ARCHITECTS, INC.

Written dimensions on these drawings shall have precedence over scaled dimensions. Contractors shall verify and be responsible for all dimensions and conditions on the job and this office shall be notified of any variations from the dimensions and conditions shown by these drawings. Shop details shall be submitted to this office for approval before processing with fabrication.

© Copyrighted 2019

DATE: 02/8/2019

JOB NO: 15058

S5.11

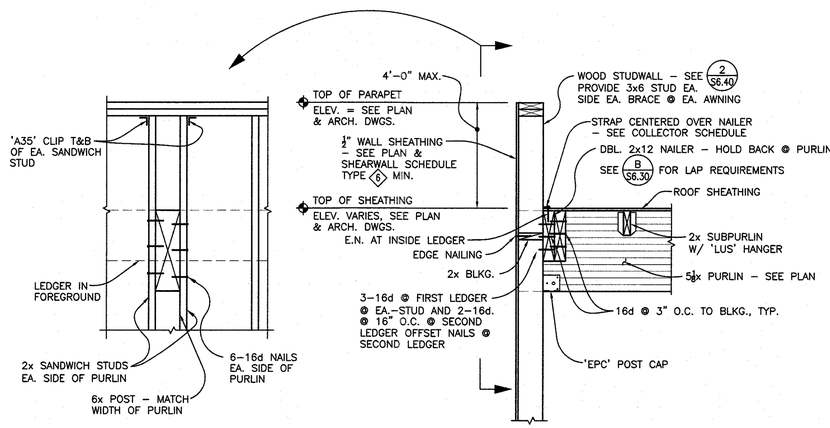

SECTION A/S6.30
3/4"=1'-0"

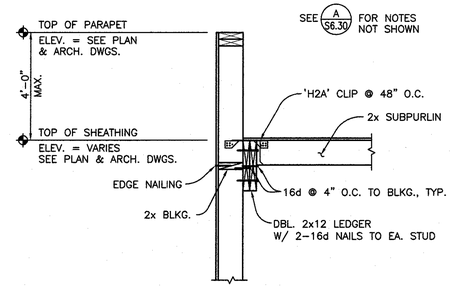

SECTION B/S6.30
3/4"=1'-0"

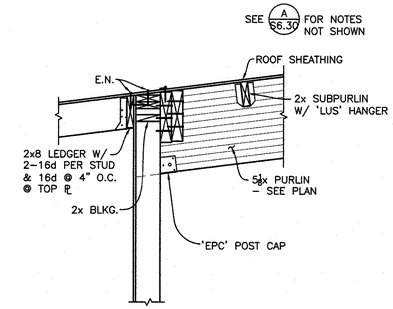

SECTION C/S6.30
3/4"=1'-0"

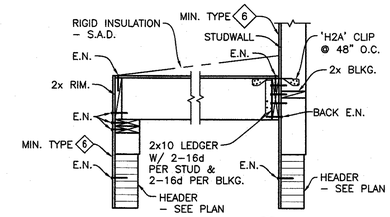

SECTION D/S6.30
3/4"=1'-0"

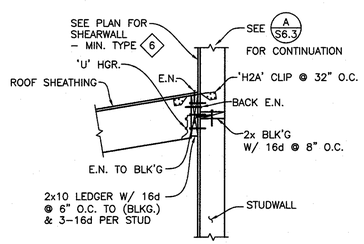

SECTION E/S6.30
3/4"=1'-0"

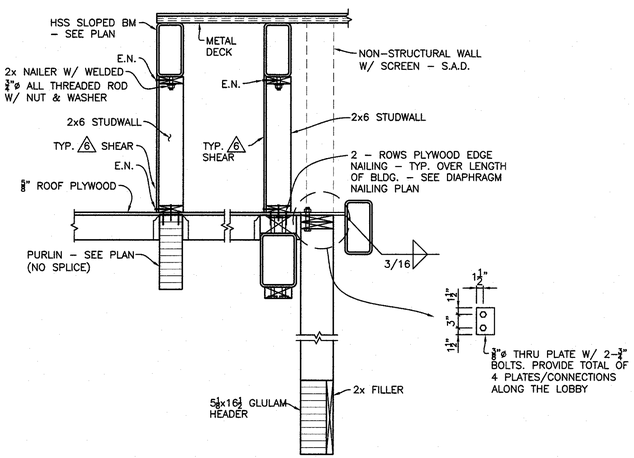

SECTION F/S6.30
3/4"=1'-0"

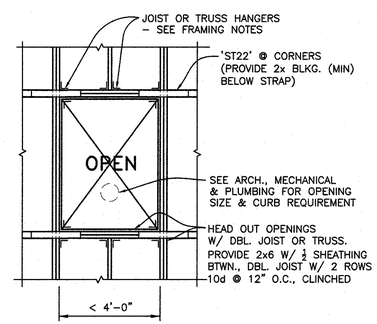

DETAIL 1/S6.30
N.T.S.

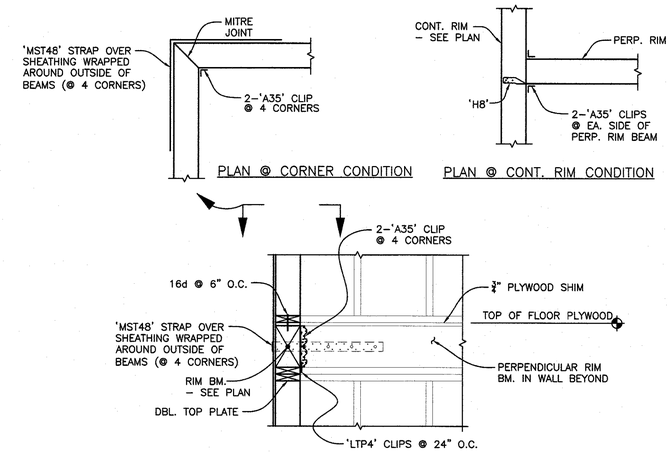

DETAIL 2/S6.30
3/4"=1'-0"

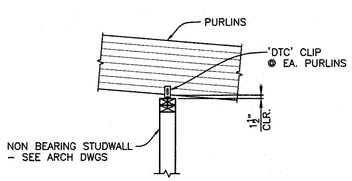

NON–BEARING WALL PERPENDICULAR PURLINS

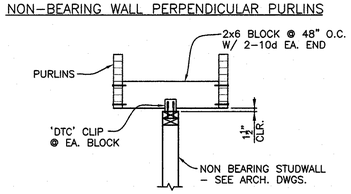

NON–BEARING WALL PARALLEL PURLINS

DETAIL 3/S6.30
3/4"=1'-0"

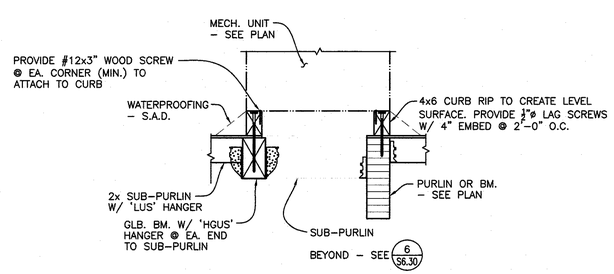

DETAIL 5/S6.30
3/4"=1'-0"

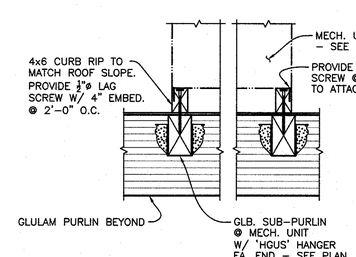

DETAIL 6/S6.30
3/4"=1'-0"

SCHEDULE			
SPAN (MAX.)	RAFTER SIZE (AT 24" O.C.)	RAFTER/NAILER CONN.	BEV. NAILER NAILS
4'-0"	2x4	4–10d TOENAILS	2–16d/TOP CHORD & 1–16d @ 24" O.C.

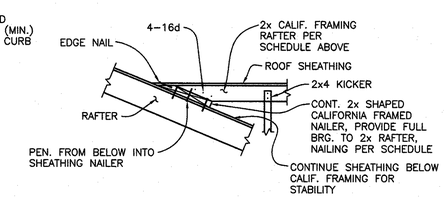

DETAIL 7/S6.30
3/4"=1'-0"

JOB COPY
These plans must be kept on the job at all times.
CITY OF MORGAN HILL
BUILDING DIVISION

WESTON MILES
ARCHITECTS
17500 Depot Street, Suite #200
Morgan Hill, CA 95037
1 •408 • 779 • 6686
• Architecture • Landscape •

PEOPLES ASSOCIATES
STRUCTURAL ENGINEERS
408-867-6220 www.paise.com
San Jose, California • Pleasanton, California

REGISTERED PROFESSIONAL ENGINEER
DAVE Y. LO
S 5589
Exp. 6/30/19
STRUCTURAL
STATE OF CALIFORNIA

CONSULTANT JOB NO: 17-253

REVISIONS
1 03/28/2019 PLAN REVIEW #2
2
3

ROOF FRAMING SECTIONS AND DETAILS

MORGAN HILL LIBRARY ADDITION

CITY OF MORGAN HILL
660 W MAIN AVE, MORGAN HILL, CA 95037

These drawings are instruments of service and are the property of WESTON MILES ARCHITECTS, INC. All designs and other information on the drawings are for use on the specified project and shall not be used otherwise without the expressed written permission of WESTON MILES ARCHITECTS, INC.

Written dimensions on these drawings shall have precedence over scaled dimensions. Contractors shall verify and be responsible for all dimensions and conditions on the job and this office shall be notified of any variations from the dimensions and conditions shown by these drawings. Shop details shall be submitted to this office for approval before proceeding with fabrication.

© Copyrighted 2019

DATE: 02/8/2019
JOB NO: 15058

S6.30

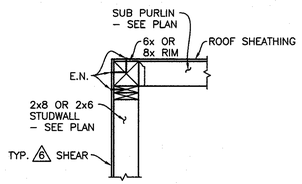

SECTION A S6.31
3/4"=1'-0"

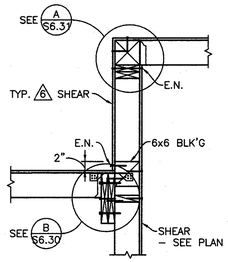

SECTION B S6.31
3/4"=1'-0"

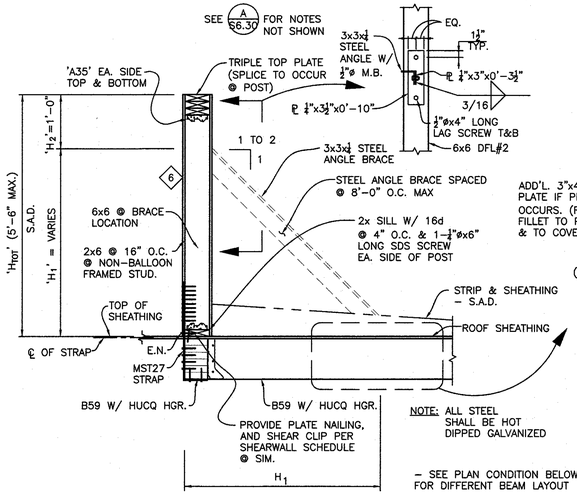

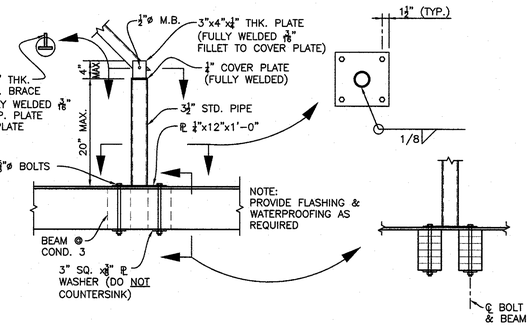

– SEE PLAN CONDITION BELOW FOR DIFFERENT BEAM LAYOUT

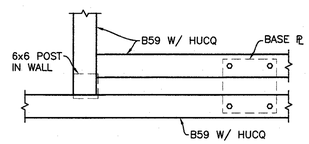

PLAN COND. 1

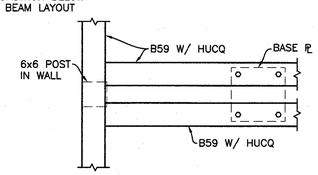

PLAN COND. 2

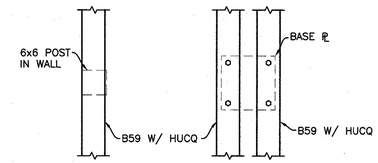

PLAN COND. 3

DETAIL 1 S6.31
3/4"=1'-0"

JOB COPY
These plans must be kept on the job at all times.
CITY OF MORGAN HILL
BUILDING DIVISION

WESTON MILES
ARCHITECTS
17500 Depot Street, Suite #200
Morgan Hill, CA 95037
1 • 408 • 779 • 6686
• Architecture • Landscape •

PEOPLES ASSOCIATES
STRUCTURAL ENGINEERS
408-957-9220 San Jose, California
www.pase.com Pleasanton, California

REGISTERED PROFESSIONAL ENGINEER
DAVE Y. LO
S 5589
Exp. 6/30/19
STRUCTURAL
STATE OF CALIFORNIA

CONSULTANT JOB NO:
17-253

REVISIONS
1 03/28/2019 PLAN REVIEW #2
2
3

ROOF FRAMING SECTIONS AND DETAILS

MORGAN HILL LIBRARY ADDITION

CITY OF MORGAN HILL
660 W MAIN AVE, MORGAN HILL, CA 95037

These drawings are instruments of service and are the property of WESTON MILES ARCHITECTS, INC. All designs and only information on the DRAWING are for use on the specified project and shall not be used otherwise without the expressed written permission of WESTON MILES ARCHITECTS, INC.

Written dimensions on these drawings shall have precedence over scaled dimensions. Contractors shall verify and be responsible for all dimensions and conditions on the job and this office shall be notified of any variations from the dimensions and conditions shown by these drawings. Shop details shall be submitted to this office for approval before proceeding with fabrication.

© Copyrighted 2019

DATE: 02/8/2019

JOB NO: 15058

S6.31

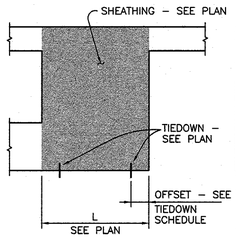

CONFIGURATION A

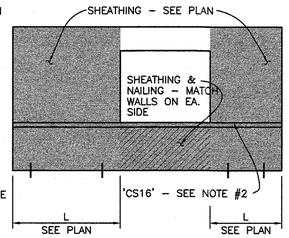

CONFIGURATION B

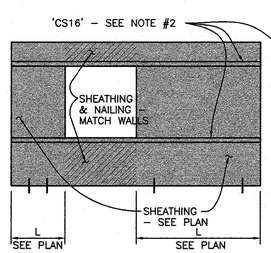

CONFIGURATION W

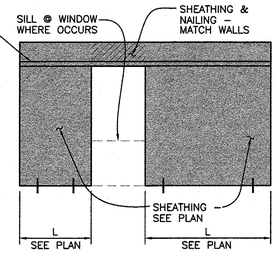

CONFIGURATION D

TYPICAL STUD KING STUD SCHEDULE @ PARAPET CONDITION			
MAX. PARAPET HT.	MAX. OPENING WIDTH		
	TYPICAL STUD	3.00'	6.00'
3.50'	2x6 D.F. #2	2–2x6 D.F. #2	6x6 D.F. #2
4.50'	3x6 D.F. #2	6x6 D.F. #1	6x8 D.F. #1

NOTE:
1. SEE ALSO S1.2 & S6.9 FOR COLLECTOR/COMPRESSION STUD/POST REQUIREMENTS AT TIEDOWNS. KING STUD SIZES SHOULD BE LARGER OF SCHEDULE SIZE ON THIS TABLE AND OF THE COMPRESSION POSTS PER TIEDOWN MANUFACTURER

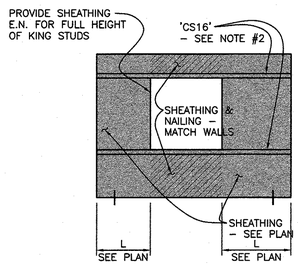

CONFIGURATION 'P1'

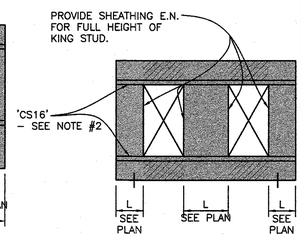

CONFIGURATION 'P2'

NOTES:
1. FOR CONFIGURATION W, F & P AT WINDOW RECESS,
   APPLY SHEATHING PER DETAIL 14/SW6.41
   APPLY STRAPS TO INSIDE FACE OF WALL
2. 'CS16' CONT. STRAP ON TOP OF SHEATHING (FILL ALL HOLES W/ 10d) – PROVIDE 3x BLKG. (USE 4x MIN @ 'CMST' STRAP – SEE PLAN WHERE LARGER STRAP IS REQUIRED) W/ E.N. FOR FULL LENGTH OF STRAP (LOCATE E.N. 3/4" FROM EDGE OF BLKG. OFFSET STRAP SO IT DOES NOT INTERFERE W/ E.N.) APPLY STRAP & E.N. TO EACH SIDE WHERE SHEATHING OCCURS, U.N.O.

DETAIL 1/S6.40
N.T.S.

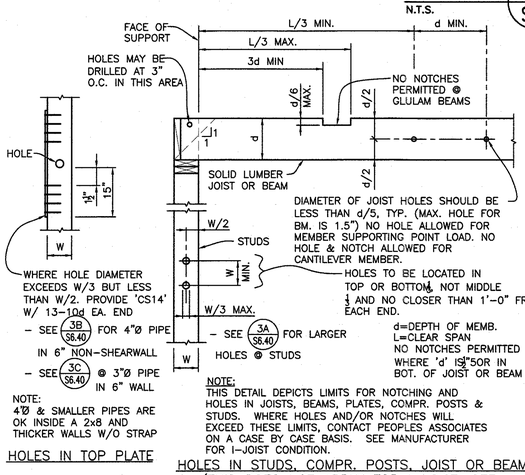

HOLES IN TOP PLATE

NOTE:
THIS DETAIL DEPICTS LIMITS FOR NOTCHING AND HOLES IN JOISTS, BEAMS, PLATES, COMPR. POSTS & STUDS. WHERE HOLES AND/OR NOTCHES WILL EXCEED THESE LIMITS, CONTACT PEOPLES ASSOCIATES ON A CASE BY CASE BASIS. SEE MANUFACTURER FOR I–JOIST CONDITION.

HOLES IN STUDS, COMPR. POSTS, JOIST OR BEAM
(THIS DOES NOT APPLY FOR I–JOIST. SEE MANUFACTURER FOR ALLOWABLE HOLES AT I–JOIST)

DETAIL 3/S6.40
3/4"=1'-0"

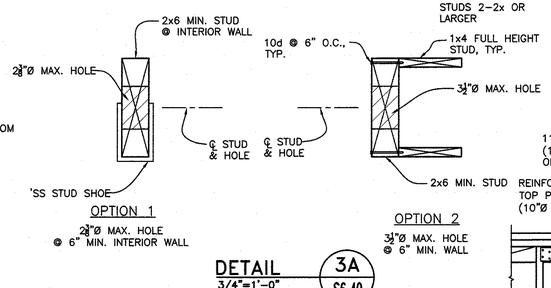

DETAIL 3A/S6.40
3/4"=1'-0"

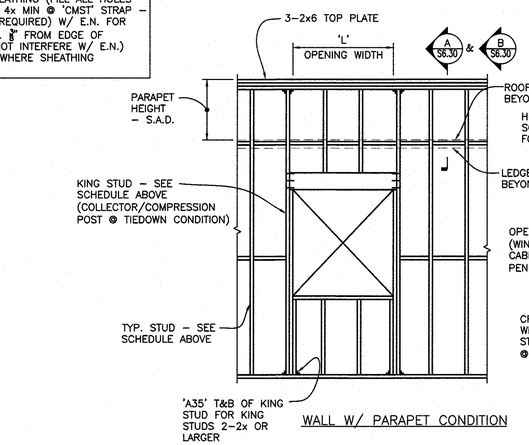

WALL W/ PARAPET CONDITION

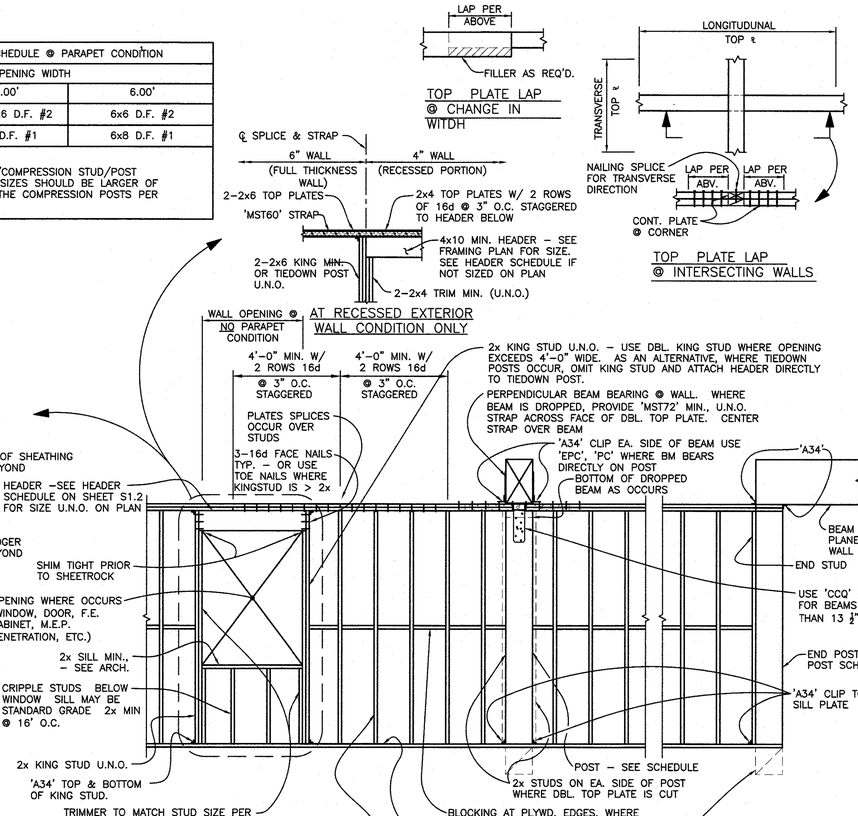

DETAIL 2/S6.40
N.T.S.

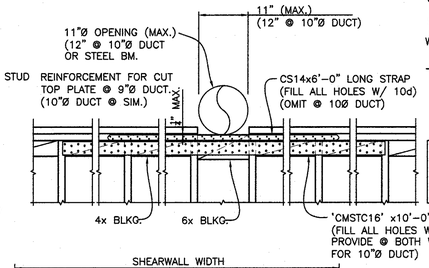

NOTE:
FOR PENETRATIONS WHICH DO NOT CONFORM TO THE LIMITATIONS HEREIN. CONTACT ENGINEER FOR ADDITIONAL INFORMATION

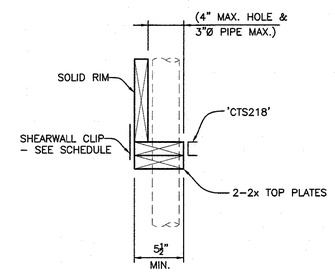

3"Ø PIPE @ 6" WALL

DETAIL 3C/S6.40
1 1/2"=1'-0"

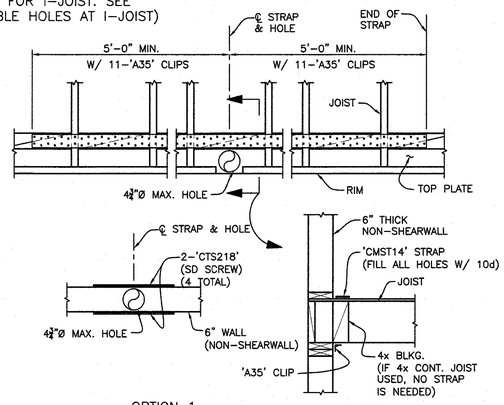

4" PIPE @ 6" THK. NON–SHEARWALL
NOTE: DO NOT INSTALL 4"Ø PIPE @ 6" THICK SHEARWALL

DETAIL 3B/S6.40
3/4"=1'-0"

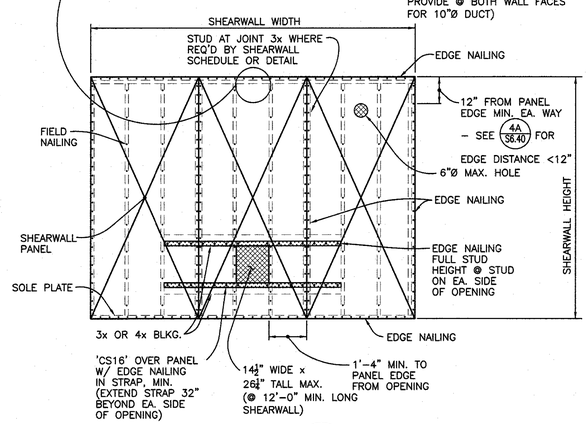

DETAIL 4/S6.40
N.T.S.

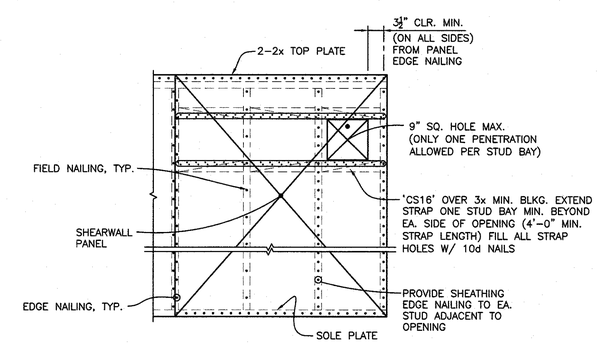

DETAIL 4A/S6.40
3/4"=1'-0"

JOB COPY
These plans must be kept on the job at all times.
CITY OF MORGAN HILL
BUILDING DIVISION

WESTON MILES
ARCHITECTS
17500 Depot Street, Suite #200
Morgan Hill, CA 95037
1 • 408 • 779 • 6686
• Architecture • Landscape •

PEOPLES ASSOCIATES
STRUCTURAL ENGINEERS
408-957-0220 • www.pase.com
San Jose, California • Pleasanton, California

REGISTERED PROFESSIONAL ENGINEER
DAVE Y. LO
S 5589
Exp. 6/30/19
STRUCTURAL
STATE OF CALIFORNIA

CONSULTANT JOB NO: 17-253

REVISIONS
1 03/28/2019 PLAN REVIEW #2
2
3

WALL FRAMING SECTIONS AND DETAILS

MORGAN HILL LIBRARY ADDITION

CITY OF MORGAN HILL
660 W MAIN AVE, MORGAN HILL, CA 95037

These drawings are instruments of service and are the property of WESTON MILES ARCHITECTS, INC. All designs and other information on the drawings are for use on the specified project and shall not be used otherwise without the expressed written permission of WESTON MILES ARCHITECTS, INC.

Written dimensions on these drawings shall have precedence over scaled dimensions. Contractors shall verify and be responsible for all dimensions and conditions on the job and this office shall be notified of any variations from the dimensions and conditions shown by these drawings. Shop drawings must be submitted to this office for approval before proceeding with fabrication.

© Copyrighted 2019

DATE: 02/8/2019
JOB NO: 15058

S6.40

NOTE:
1. U.N.O. ON PLANS

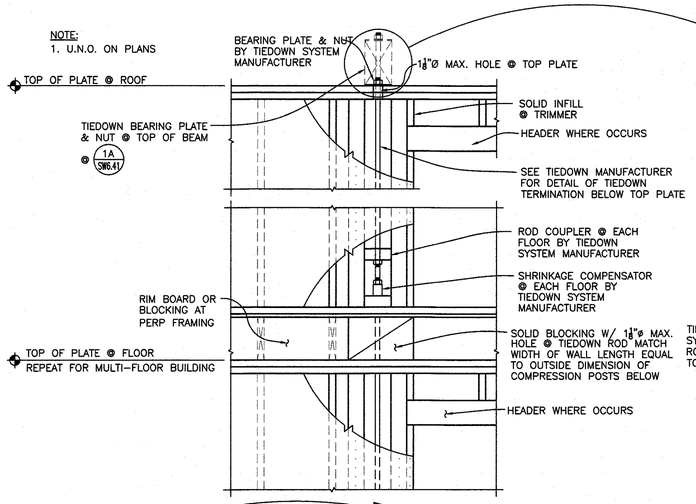

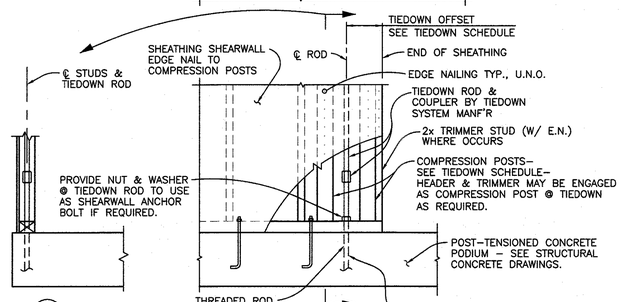

DETAIL 1 / S6.41
3/4"=1'-0"
NOT USED

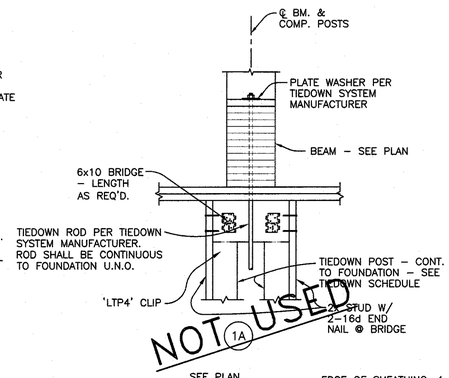

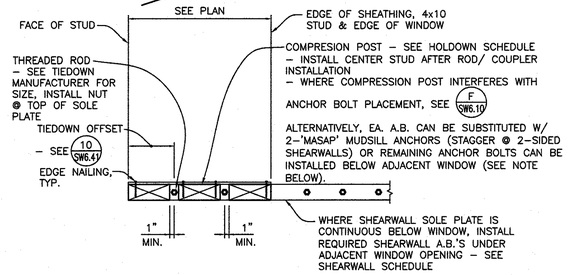

NOTE: 1) AT SHORT SHEARWALLS WHERE TIEDOWN COMPRESSION POSTS OVERLAP, THE CENTER COMPRESSION POSTS MAY BE COUNTED FOR BOTH SETS OF TIEDOWNS.
2) HEADERS SHALL BE ATTACHED TO COMPRESSION STUDS WITH 'FC' FRAMING CLIPS WHERE REQUIRED

DETAIL 2 / S6.41
3/4"=1'-0"
NOT USED

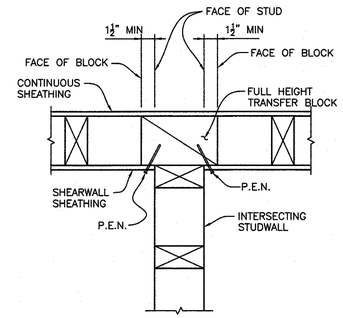

DETAIL 3 / S6.41
3/4"=1'-0"

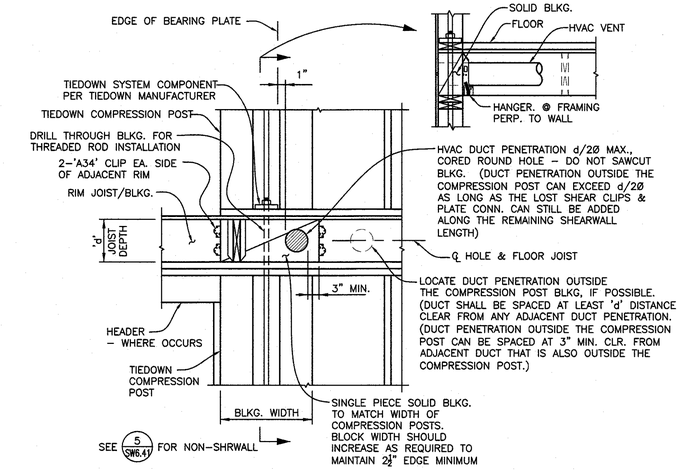

HVAC PENETRATION AT TIEDOWN COMPRESSION BLOCKS

DETAIL 4 / S6.41
3/4"=1'-0"

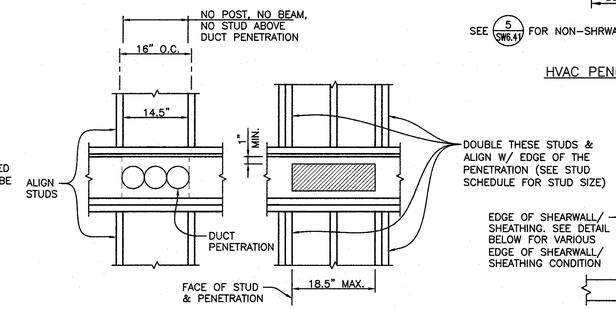

NON–SHEARWALL DUCT PENETRATION

DETAIL 5 / S6.41
3/4"=1'-0"

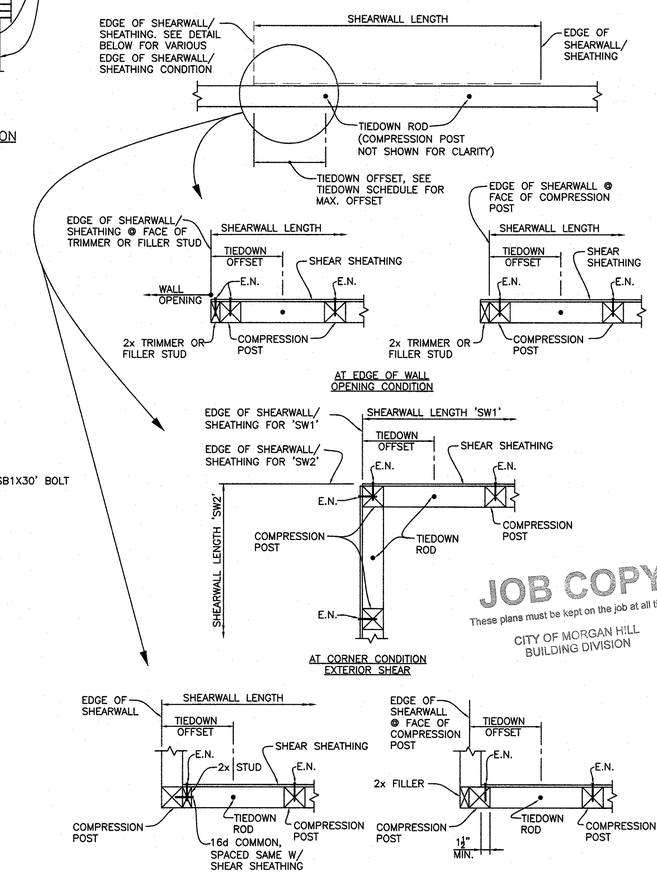

DETAIL 10 / S6.41
3/4"=1'-0"

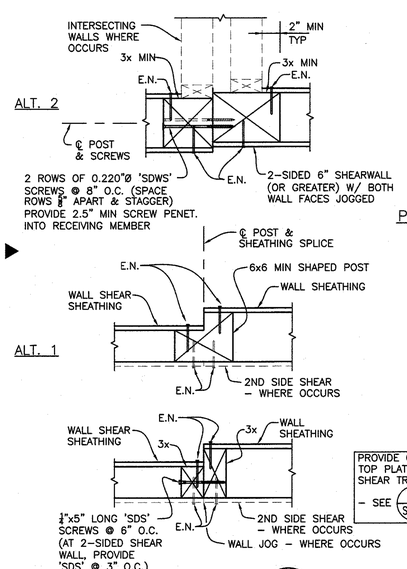

DETAIL 6 / S6.41
3/4"=1'-0"

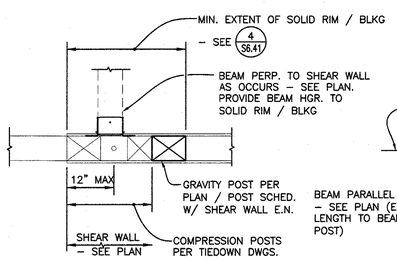

PERPENDICULAR BEAM @ SHEAR WALL END
(PLAN VIEW)

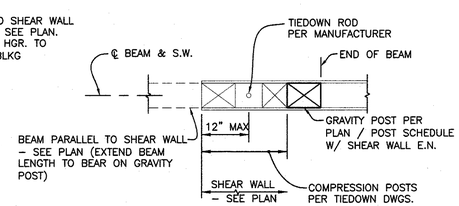

PARALLEL BEAM @ SHEAR WALL END
(PLAN VIEW)

DETAIL 7 / S6.41
3/4"=1'-0"

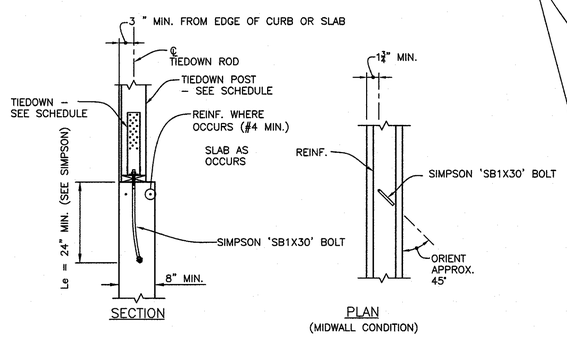

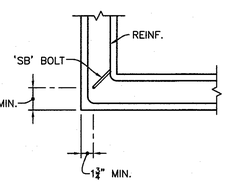

DETAIL 9 / S6.41
3/4"=1'-0"

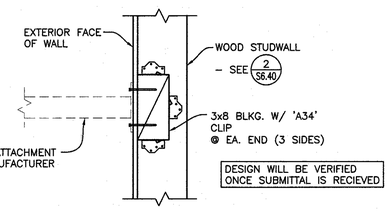

TYP BACKING @ GUARD/HANDRAILS

DETAIL 8 / S6.41
3/4"=1'-0"

WESTON MILES
ARCHITECTS
17500 Depot Street, Suite #200
Morgan Hill, CA 95037
1 •408 • 779 • 6686
• Architecture • Landscape •

PEOPLES ASSOCIATES
STRUCTURAL ENGINEERS
408-957-9220 www.pase.com
San Jose, California Pleasanton, California

REGISTERED PROFESSIONAL ENGINEER
DAVE Y. LO
S 5589
Exp. 6/30/19
STRUCTURAL
STATE OF CALIFORNIA

CONSULTANT JOB NO: 17-253

REVISIONS
1 03/28/2019 PLAN REVIEW #2
2
3

WALL FRAMING SECTIONS AND DETAILS

MORGAN HILL LIBRARY ADDITION

CITY OF MORGAN HILL
660 W MAIN AVE, MORGAN HILL, CA 95037

These drawings are instruments of service and are the property of WESTON MILES ARCHITECTS, INC. The designs and other information on the drawings are for use on the specified project and shall not be used otherwise without the expressed written permission of WESTON MILES ARCHITECTS, INC.

Written dimensions on these drawings shall have precedence over scaled dimensions. Contractors shall verify and be responsible for all dimensions and conditions on the job and this office shall be notified of any variations from the dimensions and conditions shown by these drawings. Shop details shall be submitted to this office for approval before proceeding with fabrication.

© Copyrighted 2019

DATE: 02/8/2019

JOB NO: 15058

S6.41

JOB COPY
These plans must be kept on the job at all times.
CITY OF MORGAN HILL
BUILDING DIVISION

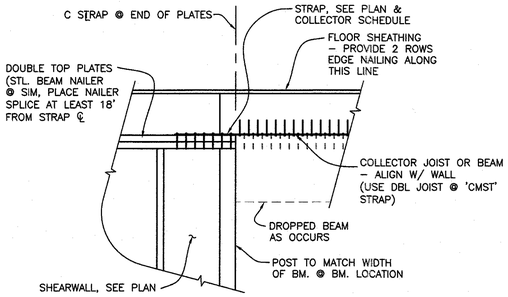

NOTE:
WHEN TIEDOWN ROD PENETRATES THROUGH DBL. TOP ℙ @ STRAP(S), OFFSET STRAP FROM ℄ OF ℙ TO AVOID ROD – ROD HOLE MUST BE < 1"Ø. FOR CMST/CMSTC STRAP WHERE ROD WILL PENETRATE STRAP, USE DOUBLE STRAP (ONE STRAP OVER ANOTHER) W/ MAX. 1½"Ø HOLE @ CENTER.

NOTE:
WHERE STRAP MEETS W/ AN ADJACENT STRAP PROVIDE A SINGLE CONTINUOUS STRAP.

DETAIL 2 / S6.90
3/4"=1'-0"

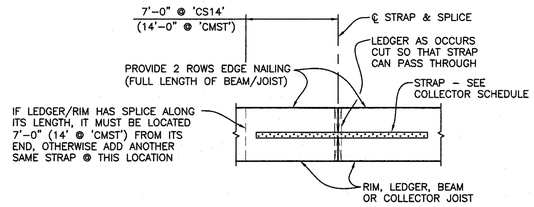

NOTE:
STRAP CAN BE PLACED ON EITHER FACE OF THE JOIST OR BEAM AS LONG AS IT IS ON FLUSH SIDE. PLACE IT WHERE IT WON'T INTERFERE WITH HANGERS OF PERPENDICULAR JOIST

NOTE:
BEAM OR JOIST MUST BE FLUSH ON THE SIDE RECEIVING THE STRAP, OTHERWISE, ADD ANOTHER BEAM OR JOIST

DETAIL 6 / S6.90
3/4"=1'-0"

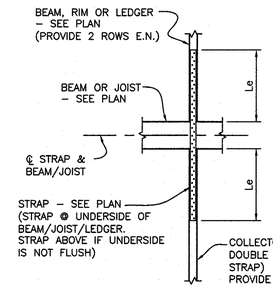

NOTE:
IF LEDGER/RIM HAS SPLICE ALONG ITS LENGTH, IT MUST BE LOCATED 7'-0" FROM ITS END, OTHERWISE ADD ANOTHER SAME STRAP @ THIS LOCATION

PLAN
(BEAM, RIM OR LEDGER TO JOIST)

DETAIL 7 / S6.90
3/4"=1'-0"

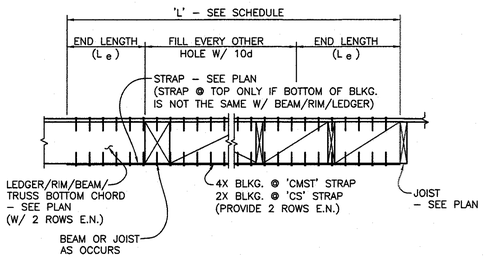

DETAIL 8 / S6.90
3/4"=1'-0"

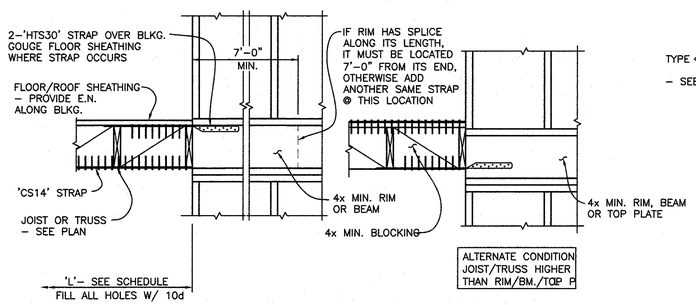

DETAIL 9 / S6.90
3/4"=1'-0"

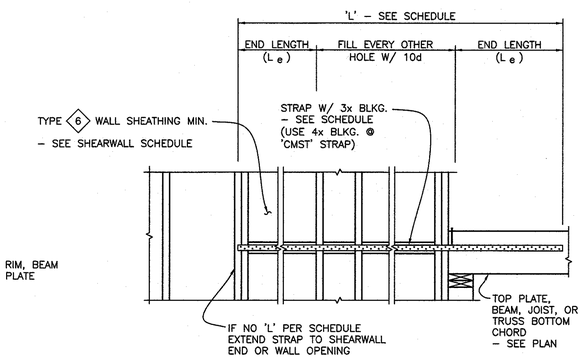

DETAIL 10 / S6.90
3/4"=1'-0"

COLLECTOR SCHEDULE*

MARK	HARDWARE	CAPACITY	DETAIL	NOTES
1	'MST48' STRAP	5310#	A / S6.30	OVER LEDGER
2	'CS14' X 4'-0" LONG FILL ALL HOLES W/ 10d	2490#	2 / S6.90	PLATE TO JOIST/BEAM
2A	'CMST12' X 6'-0" LONG FILL ALL HOLES W/ 10d	4585#	2 / S6.90	PLATE TO DBL JOIST/BEAM
2B	'CMST12' X 8'-0" LONG FILL ALL HOLES W/ 10d	6490#	2 / S6.90	PLATE TO DBL JOIST/BEAM
2C	'CMST12' X 11'-0" LONG FILL ALL HOLES W/ 10d	9215#	2 / S6.90	PLATE TO DBL JOIST/BEAM
6	'CS14' X 4'-0" LONG FILL ALL HOLES W/ 10d	2490#	6 / S6.90	BEAM/RIM/JOIST TO BEAM/RIM/JOIST/TRUSS
6A	'CMST12' X 6-0" LONG FILL ALL HOLES W/ 10d	4585#	6 / S6.90	BEAM/RIM/DBL JOIST TO BEAM/RIM/DBL JOIST
6B	'CMST12' X 8'-0" LONG FILL ALL HOLES W/ 10d	6490#	6 / S6.90	BEAM/RIM/DBL JOIST TO BEAM/RIM/DBL JOIST
6C	'CMST12' X 11'-0" LONG FILL ALL HOLES W/ 10d	9215#	6 / S6.90	BEAM/RIM/DBL JOIST TO BEAM/RIM/DBL JOIST
7	'CS14' Le = 2'-0" FILL ALL HOLES W/ 10d	2490#	7 / S6.90	BEAM/LEDGER/JOIST TO BEAM/JOIST
7A	'CMST12' Le = 3'-0" FILL ALL HOLES W/ 10d	4585#	7 / S6.90	BEAM/LEDGER/DBL JOIST TO BEAM/DBL JOIST/RIM
7B	'CMST12' Le = 4'-0" FILL ALL HOLES W/ 10d	6490#	7 / S6.90	BEAM/LEDGER/DBL JOIST TO BEAM/DBL JOIST/RIM
7C	'CMST12' Le = 5'-6" FILL ALL HOLES W/ 10d	9215#	7 / S6.90	BEAM/LEDGER/DBL JOIST TO BEAM/DBL JOIST/RIM
8	'CS14' X 8'-0" LONG Le = 2'-0" W/ 20-10d @ Le	2490#	8 / S6.90	TRUSS/LEDGER/RIM/BEAM TO BLKG.
8A	'CMST12' X 14'-0" LONG Le = 3'-0" W/ 40-10d @ Le	4585#	8 / S6.90	TRUSS/LEDGER/RIM/BEAM TO BLKG.
8B	'CMST12' X 19'-6" LONG Le = 4'-0" W/ 50-10d @ Le	6490#	8 / S6.90	TRUSS/LEDGER/RIM/BEAM TO BLKG.
8C	'CMST12' X 27'-0" LONG Le = 5'-6" W/ 65-10d @ Le	9215#	8 / S6.90	TRUSS/LEDGER/RIM/BEAM TO BLKG.
9	2-'HTS30' & 'CS14' X 6'-0" LONG	2490#	9 / S6.90	BLKG. TO RIM/BEAM/JOIST/TOP PLATE
10	'CS14' X 9'-6" LONG Le = 2'-0" W/ 20-10d @ Le	2490#	10 / S6.90	TOP PLATE/JOIST/BEAM/TRUSS TO WALL BLKG.
10A	'CMST12' Le = 2'-6" W/ 25-10d @ Le	4585#	10 / S6.90	PLATE/BEAM/TRUSS TO WALL BLKG.
10C	'CMST12' Le = 5'-6" FILL ALL HOLES W/ 10d	9215#	10 / S6.90	TOP PLATE/JOIST/BEAM/TRUSS TO WALL BLKG.
11	2-'HTS30' & 'CS14'	2490#	11 / S6.90	BLKG. TO WALL BLKG.
12	'CS14' X 9'-0" LONG Le = 2'-0" W/ 20-10d @ Le	2490#	12 / S6.90	TRUSS/BEAM/JOIST/LEDGER TO TRUSS BLKG.
12A	'CMST12' X 15'-0" LONG Le = 2'-6" W/ 40-10d @ Le	4585#	12 / S6.90	TRUSS/BEAM/DBL JOIST TO TRUSS BLKG.
12B	'CMST12' X 21'-6" LONG Le = 4'-0" W/ 50-10d @ Le	6490#	12 / S6.90	TRUSS/BEAM/DBL JOIST TO TRUSS BLKG.
12C	'CMST12' X 30'-0" LONG Le = 5'-6" W/ 65-10d @ Le	9215#	12 / S6.90	TRUSS/BEAM/DBL JOIST TO TRUSS BLKG.

* ADDITIONAL NOTES (APPLIES TO ALL STRAPS):
1. WHERE A STRAP MEETS W/ AN ADJACENT STRAP, PROVIDE A SINGLE CONTINUOUS STRAP. WHERE TWO DIFFERENT SIZE STRAPS MEET, USE THE LARGER STRAP CONTINUOUS.
2. PROVIDE TWO ROWS OF PANEL EDGE NAILING AT ALL COLLECTOR TRUSSES, BEAMS, JOISTS AND BLKG.

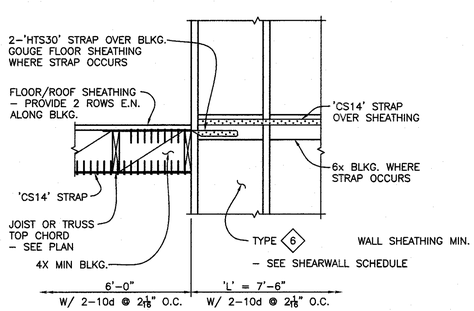

DETAIL 11 / S6.90
3/4"=1'-0"

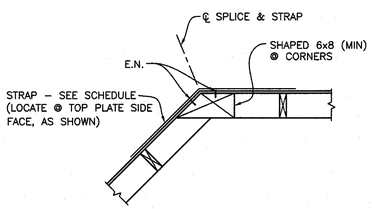

DETAIL 17 / S6.90
3/4"=1'-0"

JOB COPY
These plans must be kept on the job at all times.
CITY OF MORGAN HILL
BUILDING DIVISION

WESTON MILES
ARCHITECTS
17500 Depot Street, Suite #200
Morgan Hill, CA 95037
1 • 408 • 779 • 6686
• Architecture • Landscape •

PEOPLES ASSOCIATES
STRUCTURAL ENGINEERS
408-957-9220 San Jose, California
www.pase.com Pleasanton, California

REGISTERED PROFESSIONAL ENGINEER
DAVE Y. LO
S 5589
Exp. 6/30/19
STRUCTURAL
STATE OF CALIFORNIA

CONSULTANT JOB NO: 17-253

REVISIONS
1 03/28/2019 PLAN REVIEW #2
2
3

COLLECTOR DETAILS

MORGAN HILL LIBRARY ADDITION

CITY OF MORGAN HILL
660 W MAIN AVE, MORGAN HILL, CA 95037

These drawings are instruments of service and are the property of WESTON MILES ARCHITECTS, INC. All designs and other information on the drawings are for use on the specified project and shall not be used otherwise without the expressed written permission of WESTON MILES ARCHITECTS, INC.

Written dimensions on these drawings shall have precedence over scaled dimensions. Contractors shall verify and be responsible for all dimensions and conditions on the job and report any errors or omissions to the architect. Do not scale dimensions and conditions shown by these drawings. Shop details shall be submitted to this office for approval before proceeding with fabrication.

© Copyrighted 2019

DATE: 02/8/2019

JOB NO: 15058

S6.90

GENERAL NOTES

1 BEFORE COMMENCEMENT OF WORK, THE CONTRACTOR SHALL VERIFY THE EXACT LOCATIONS, ELEVATIONS AND CHARACTERISTICS OF ALL UTILITIES AND PIPING, AND SHALL IMMEDIATELY NOTIFY THE ARCHITECT OF ANY DISCREPANCIES.

2 EXACT LOCATIONS AND MOUNTING HEIGHTS OF PLUMBING FIXTURES SHALL BE OBTAINED FROM THE ARCHITECTURAL DRAWINGS.

3 SEE ARCHITECTURAL DRAWINGS FOR ADA FIXTURE LOCATIONS AND MOUNTING HEIGHTS. (INSULATE ALL EXPOSED HOT AND COLD WATER AND DRAIN PIPING BELOW ADA LAVATORIES AND SINKS AND OFFSET P-TRAP AGAINST WALL. ALSO, ALL FLUSH VALVES SHALL BE TO WIDE SIDE OF STALL.)

4 TRAPS FOR ALL LAVATORIES AND SINKS SHALL TRAP STRAIGHT BACK TO WALL WITH ALL REQUIRED OFFSETS HAPPENING WITHIN THE WALL.

5 THE CONTRACTOR SHALL MAKE ALL ARRANGEMENTS WITH UTILITY COMPANIES FOR SERVICE IN THE NAME OF THE OWNER AND SHALL PAY ALL MATERIAL AND LABOR COSTS INCIDENTAL TO AN OPERABLE UTILITY SERVICE AS REQUIRED BY THE DESIGNATED GOVERNING AUTHORITIES OF THE CITY.

6 ALL PLUMBING WORK SHALL BE INSTALLED SO AS TO AVOID INTERFERENCE WITH ELECTRICAL AND MECHANICAL EQUIPMENT AND STRUCTURAL FRAMING.

7 THE CONTRACTOR SHALL COORDINATE THE LOCATION OF ALL CEILING ACCESS PANELS WITH THE ARCHITECTURAL REFLECTED CEILING PLANS AND THE ELEC. LIGHTING LAYOUT.

8 THE PLUMBING CONTRACTOR SHALL PROVIDE THE WATER, SEWER AND STORM DRAIN SYSTEMS TO A POINT OF CONNECTION SHOWN ON FLOOR PLANS AND SHALL MEET THE INVERT ELEVATION AS FIELD VERIFIED WHILE MAINTAINING REQUIRED PIPE GRADE.

9 ANY ALTERATIONS TO A STRUCTURAL MEMBER, SUCH AS CUTTING, BORING, BRAZING, DRILLING, WELDING, ETC. SHALL HAVE PRIOR WRITTEN APPROVAL OF ARCHITECT AND STRUCTURAL ENGINEER.

10 ALL CLEANOUTS SHALL BE INSTALLED WHERE READILY ACCESSIBLE. THE CONTRACTOR SHALL COORDINATE ALL CLEANOUT LOCATIONS WITH EQUIPMENT, CABINETS, ETC., AND THE ARCHITECT PRIOR TO ANY INSTALLATION.

11 CONTRACTOR TO PROVIDE WATER HAMMER ARRESTORS AS MANUFACTURED BY JAY R. SMITH. WATER HAMMER ARRESTORS SHALL BE INSTALLED PER MANUFACTURER'S RECOMMENDATIONS ON ALL DOMESTIC WATER BRANCH LINES SERVING FIXTURES.

12 ALL PLUMBING FIXTURE VENTS TO TERMINATE A MIN. OF 12 INCHES FROM ANY VERTICAL SURFACE AND 10 FEET FROM ANY OUTSIDE AIR INTAKES.

13 ALL VALVES, UNIONS, ETC. TO BE SAME SIZE AS PIPE UNLESS OTHERWISE INDICATED ON DRAWINGS.

14 CONTRACTOR SHALL COORDINATE LAYOUT OF ALL BELOW GRADE PIPING AND COMPONENTS WITH GENERAL CONTRACTOR PRIOR TO BID TO DETERMINE EXTENT OF REQUIRED SAW CUTTING, EXCAVATION, AND SUBSEQUENT REPAIR/RESTORATION OF ALL AFFECTED HARDSCAPE AND SOFTSCAPE SURFACES. ALL SUCH ITEMS SHALL BE INCLUDED IN BID.

15 BEFORE FABRICATION OR INSTALLATION THE CONTRACTOR SHALL VERIFY EXACT LOCATIONS OF ALL MECHANICAL EQUIPMENT AND EQUIPMENT PROVIDED UNDER ANOTHER SECTION OF SPECIFICATIONS. EXACT ROUGH-IN LOCATIONS AND REQUIREMENTS SHALL BE COORDINATED IN FIELD.

16 ALL POINTS OF CONNECTION SHALL BE COORDINATED WITH THE GENERAL CONTRACTOR PRIOR TO BID.

17 ALL WASTE AND VENT PIPING SHALL SLOPE AT 2% UNLESS OTHERWISE INDICATED.

18 ALL VALVES, WATER HAMMER ARRESTORS OR OTHER EQUIPMENT SHOWN IN WALLS OR ABOVE NON-ACCESSIBLE CEILINGS SHALL BE INSTALLED BEHIND AN ACCESS PANEL.

19 THESE DRAWINGS SHALL BE READ IN CONJUNCTION WITH AND BE CONSIDERED TO BE A PART OF SEPARATE AND COMPLETE MECHANICAL SPECIFICATIONS.

20 CONNECTION BETWEEN INCOMPATIBLE MATERIALS ABOVE GRADE AND INSIDE BUILDING SHALL BE MADE WITH TWO (2) DIELECTRIC UNIONS SEPARATED BY A SIX INCH (6") SECTION OF RED BRASS PIPE.

21 ALL EXTERIOR GAS COCKS, WATER SHUT OFF VALVES AND/OR SEWER CLEANOUTS BELOW GROUND SHALL BE INSTALLED IN YARD BOXES WITH THE COVERS CONSPICUOUSLY MARKED "GAS", "WATER", AND "SEWER" RESPECTIVELY.

22 THE CONTRACTOR SHALL VERIFY THE EXACT ELEVATIONS AND LOCATION OF EXISTING DRAINAGE SYSTEM PIPING PRIOR TO CONNECTION OF ANY PIPING.

23 ALL HORIZONTAL PIPING LINES EXTENDED AND CONNECTED TO EQUIPMENT SHALL BE RUN AT THE HIGHEST POSSIBLE ELEVATIONS AND NOT LESS THAN 6" ABOVE THE FLOOR TO PROVIDE CLEARANCE FOR CLEANING. AT WALL OR COLUMN LOCATIONS, PIPING ROUGH-IN SHALL BE STUBBED IN WALLS WHENEVER POSSIBLE.

24 THE CONTRACTOR SHALL BE RESPONSIBLE FOR PATCHING AND REPAIRING ALL AREAS WHICH ARE DAMAGED BY HIS OPERATIONS. IN ADDITION, THE CONTRACTOR SHALL RESTORE TO THEIR ORIGINAL CONDITION ALL EXISTING TO REMAIN STRUCTURE AND NEW CONSTRUCTION DAMAGED BY HIS OPERATIONS.

25 THE CONTRACTOR SHALL BE RESPONSIBLE FOR PATCHING AND REPAIRING ALL PAVED AREAS WHICH ARE EXCAVATED AND/OR DAMAGED BY HIS OPERATIONS. IN ADDITION, THE CONTRACTOR SHALL RESTORE TO THEIR ORIGINAL CONDITION ALL PLANTED AREAS DAMAGED BY HIS OPERATIONS.

26 ALL PATCHING AND REPAIRING OF CONCRETE PAVING AND/OR WALKS SHALL BE UNDER ANOTHER SECTION OF THE SPECIFICATIONS.

27 ALL EXISTING PIPING DAMAGED DURING EXCAVATION SHALL BE REPAIRED WITH MATERIALS TO MATCH EXISTING BY THE CONTRACTOR AT NO COST TO THE OWNER.

28 ALL CUTTING OF EXISTING PAVING, WALKS AND/OR FLOORS SHALL BE BY MACHINE SAW CUTTING. HOLES FOR PIPES IN CONCRETE WALLS OR FLOORS SHALL BE DONE BY CORE DRILLING EQUIPMENT.

29 ALL PIPING, EXCEPT PIPING OF NONFERROUS MATERIAL, INSTALLED WITHIN THE GROUND SHALL BE PROTECTED AGAINST CORROSION BY A PROTECTIVE COVERING SUITABLE FOR THE PURPOSE AND SUBJECT TO THE APPROVAL OF THE BUILDING OFFICIAL. ANY PIPING SUBJECT TO UNDUE CORROSIVE ACTION SHALL BE PROTECTED IN A MATTER SUITABLE FOR THE PURPOSE AND SUBJECT TO THE APPROVAL OF THE BUILDING OFFICIAL.

30 ALL PENETRATIONS AND OPENINGS IN PARTY WALLS AND ROOF/FLOOR/CEILING ASSEMBLIES DUE TO PLUMBING WORK SHALL BE SEALED LINED, INSULATED OR OTHERWISE TREATED TO MAINTAIN THE REQUIRED FIRE AND SOUND RATING.

31 PER CGBS CODE SECTION 301.3.1 & CIVIL CODE SECTION 1101.5(d)(1)(B), ALL EXISTING NON-COMPLIANT PLUMBING FIXTURES ARE REQUIRED TO BE UPGRADED WITH WATER CONSERVING PLUMBING FIXTURES. WATER CLOSETS WITH A FLOW RATE IN EXCESS OF 1.6 GPF WILL NEED TO BE REPLACED WITH WATER CLOSETS WITH A MAXIMUM FLOW RATE OF 1.28 GPF. KITCHEN FAUCETS WITH A FLOW RATE GREATER THAN 2.2 GPM WILL NEED TO BE REPLACED WITH A FAUCET WITH MAXIMUM FLOW RATE OF 1.8 GPM @ 60 PSI. LAVATORY FAUCETS WITH A FLOW RATE GREATER THAN 2.2 GPM WILL NEED TO BE REPLACED WITH A FAUCET WITH MAXIMUM FLOW RATE OF 0.5 PGM @ 60 PSI. URINAL WITH A FLOW RATE EXCEEDING 1 GPF SHALL BE REPLACED WITH MAXIMUM 0.5 GPF (WALL MOUNTED URINAL 0.125 GPF).

1

PLUMBING LEGEND

SYMBOL	ABBREVIATION	DESCRIPTION
— — —	W	SANITARY WASTE/SEWER PIPING
—GW—	GW	GREASE WASTE PIPING
—SD—	SD	STORM DRAIN PIPING
—OFD—	OFD	OVERFLOW DRAIN PIPING
- - - - - - -	V	WASTE/SANITARY VENT PIPING
—GV—	GV	GREASE VENT PIPING
		DEMO PIPING
	(E)W	EXISTING SANITARY SEWER PIPING
	(E)V	EXISTING SANITARY VENT PIPING
	CW	DOMESTIC COLD WATER PIPING
	HW	DOMESTIC HOT WATER PIPING
	HWR	DOMESTIC HOT WATER RETURN PIPING
	(E)CW	EXISTING COLD WATER PIPING
	(E)HW	EXISTING HOT WATER PIPING
	(E)HWR	EXISTING HOT WATER RETURN PIPING
—G—	G	NATURAL GAS PIPING
—MPG—	MPG	MEDIUM PRESSURE NATURAL GAS PIPING
—G—	(E)G	EXISTING NATURAL GAS PIPING
—MPG—	(E)MPG	EXISTING MEDIUM PRESSURE NATURAL GAS PIPING
—CD—	CD	CONDENSATE DRAIN PIPING
C		PIPE GOING DOWN
O		PIPE GOING UP
		TEE
	FCO	FLOOR CLEANOUT/CLEANOUT TO GRADE
		P-TRAP
	POC	POINT OF CONNECTION
	WCO	WALL CLEANOUT
		PIPE CAP
	HB	HOSE BIBB
	SOV	SHUT-OFF VALVE
	SOVAP	SHUT-OFF VALVE IN ACCESS PANEL
	SOVYB	SHUT-OFF VALVE IN YARD BOX
		PLUG VALVE
		GAS COCK VALVE
		CHECK VALVE
	FD	FLOOR DRAIN
	FS	FLOOR SINK
XX-X		EQUIPMENT OR FIXTURE
	CONT.	CONTINUED/CONTINUATION
	DFM	DISTANCE FROM METER
	FR.	FROM
	BEL.	BELOW
	DN.	DOWN
	VTR	VENT THROUGH ROOF
	AP	ACCESS DOOR
	NIC	NOT IN CONTRACT
	REF.	REFERENCE
	S.A.D.	SEE ARCHITECTURAL DRAWINGS
	S.M.D.	SEE MECHANICAL DRAWINGS
	S.C.D.	SEE CIVIL DRAWINGS
	S.S.D.	SEE STRUCTURAL DRAWINGS
	SF	SQUARE FEET

LIST OF APPLICABLE CODES

LIST OF CODES AND STANDARDS MODEL CODE EDITIONS EFFECTIVE JANUARY 1, 2016

2016 CA BUILDING CODE TITLE 24 PART 2 VOLUME #1 AND #2

2016 CA ELECTRICAL CODE TITLE 24 PART 3

2016 CA MECHANICAL CODE TITLE 24 PART 4

2016 CA PLUMBING CODE TITLE 24 PART 5

2016 CA FIRE CODE TITLE 24 PART 9

2016 CA BUILDING STANDARDS TITLE 24 PART 9

PLUMBING FIXTURE SCHEDULE

FIXTURE	MARK	ROUGH IN CONNECTIONS				DESCRIPTION
		HW	CW	WASTE	VENT	
SINK	S-1	1/2"	1/2"	2"	2"	JUST SL-ADA-2125-A-GR 18 GAUGE STAINLESS STEEL SINGLE BOWL SINK. FAUCET: CHICAGO FAUCETS 1100-L9E35ABCP FAUCET WITH 9 1/2 SWING SPOUT AND WING BLADES, 1.5GPM. ANGLE STOPS: BRASSCRAFT OCR39C1. P-TRAP: JAMECO 50317 17 GAUGE. PIPE WRAP: SKALGARD SG101 AND SG102
SEWAGE PUMP	SP-1	-	-	2"	--	SANISWIFT PART NO. 021 ABOVE THE FLOOR DRAIN PUMP SYSTEM. 1" DISCHARGE, 1-1/2"V, 0.4 HP, 4.5 AMPS, 120V 60Hz SINGLE PHASE.
~~ROOF DRAIN~~	~~RD-1~~			~~SEE~~ PLANS		~~ZURN #Z-121-DP ROOF DRAIN WITH 14 GAUGE DECK PLATE.~~ 1
OVERFLOW ROOF DRAIN	OFD-1	-	-	SEE PLANS	-	ZURN #Z-121-DP-89 ROOF DRAIN WITH 14 GAUGE DECK PLATE AND 2" HIGH EXTERNAL WATER DAM.

NOTES:

1. ITEM DESCRIPTIONS INCLUDED IN THIS SCHEDULE ARE INTENDED TO DESCRIBE GENERAL FIXTURE CONFIGURATIONS, AND DO NOT INCLUDE ALL REQUIREMENTS. REFER TO SPECIFICATION SECTION 22 00 00 FOR ADDITIONAL REQUIREMENTS.
2. REFER TO ARCHITECTURAL DRAWINGS FOR MOUNTING HEIGHTS AND REQUIRED CLEARANCES OF ALL FIXTURES.
3. ALL FIXTURES, TRIM, AND VALVING SHALL COMPLY WITH CALIFORNIA'S LEAD FREE PLUMBING LAW, HEALTH AND SAFETY CODE AND CA ASSEMBLY BILL 1953.

ELECTRIC WATER HEATER SCHEDULE

ITEM	MANUFACTURER	MODEL NO.	SERVICE	STORAGE (GAL.)	VOLT	PHASE	KW	TEMP RISE @ 1.0 GPM	INLET TEMP (°F)	OUTLET TEMP (°F)	OPERATING WEIGHT (LBS)
EWH-1	CHRONOMITE	M-30	DOMESTIC WATER	-	208	1	6.2	42	60	105	5

JOB COPY
These plans must be kept on the job at all times.
CITY OF MORGAN HILL
BUILDING DIVISION

SHEET INDEX

P0.1	GENERAL NOTES, LEGEND & SCHEDULES
P0.2	SHEET SPECIFICATIONS AND DETAILS
P2.1	PLUMBING FLOOR AND ROOF PLANS

WESTON MILES
ARCHITECTS
17500 Depot Street, Suite #200
Morgan Hill, CA 95037
1 • 408 • 779 • 6686
• Architecture • Landscape •

LICENSED ARCHITECT
CHARLES D. WESTON
No. C 10,552
RENEWAL 08-31-19
STATE OF CALIFORNIA
NOT VALID WITHOUT SIGNATURE

HM MECHANICAL GROUP
8517 Earhart Rd, Suite 230
Oakland, CA 94621
510-569-2000

CONSULTANT JOB NO:

REGISTERED PROFESSIONAL ENGINEER
GARY L HENNINGS
No. M20245
3/28/2019
MECHANICAL
STATE OF CALIFORNIA

REVISIONS
1 03/28/2019 PLAN REVIEW #2

PLUMBING: GENERAL NOTES

MORGAN HILL LIBRARY ADDITION

CITY OF MORGAN HILL
660 W MAIN AVE, MORGAN HILL, CA 95037

These drawings are instruments of service and are the property of WESTON MILES ARCHITECTS, INC. All designs and other information on the drawings are for use on the specified project and shall not be used otherwise without the expressed written permission of WESTON MILES ARCHITECTS, INC.

Written dimensions on these drawings shall have precedence over scaled dimensions. Contractors shall verify and be responsible for all dimensions and conditions on the job and this office shall be notified of any variations from the dimensions and conditions shown by these drawings. Shop details shall be submitted to this office for approval before proceeding with fabrication.

© Copyrighted 2019

DATE: 02/08/2019

JOB NO: 15058

P0.1

PLUMBING SPECIFICATIONS

1.0 GENERAL

DESCRIPTION OF WORK: FURNISH ALL LABOR, MATERIALS, EQUIPMENT AND PAY ALL FEES REQUIRED TO COMPLETE ALL PLUMBING WORK SHOWN ON THE DRAWINGS AND SPECIFIED HEREIN, INCLUDING:

SANITARY SEWER AND STORM DRAIN SYSTEMS
DOMESTIC HOT AND COLD WATER SYSTEM
CONDENSATE PIPES
INSULATION
EXCAVATION, TRENCHING, AND BACKFILLING FOR WORK UNDER THIS SECTION
MISCELLANEOUS STEELWORK (FLOOR SLEEVES, SLOTS, INSERTS, PLATES, SUPPORTS, HANGERS, ETC.)

INCORPORATED DOCUMENTS: PUBLISHED SPECIFICATIONS, STANDARDS, TESTS OR RECOMMENDED METHODS OF TRADE, INDUSTRY OR GOVERNMENTAL ORGANIZATIONS APPLY TO WORK OF THIS SECTION.

REQUIREMENTS OF REGULATORY AGENCIES AND STANDARDS

PERMITS: OBTAIN AND PAY FOR ALL FEES, PERMITS AND INSPECTIONS. DELIVER ALL CERTIFICATES OF INSPECTION TO ARCHITECT.

LEGAL REQUIREMENTS AND STANDARDS: COMPLY WITH APPLICABLE SECTIONS OF STATE AND LOCAL CODES, LAWS, ORDINANCES, RULES AND REGULATIONS OF AUTHORITIES HAVING JURISDICTION. SUCH REQUIREMENTS SHALL BE THE MINIMUM ACCEPTABLE REQUIREMENTS FOR THE WORK. THE DRAWINGS AND SPECIFICATIONS TAKE PRECEDENCE WHEN THEY CALL FOR MATERIALS OR CONSTRUCTION OF BETTER QUALITY OR LARGER SIZE THAN REQUIRED BY CODES, LAWS, RULES, AND REGULATIONS.

SERVICE CONNECTIONS: ARRANGE AND PAY ALL COSTS FOR UTILITIES REQUIRED TO COMPLETE ALL WORK OF THIS DIVISION. CONNECTION TO ALL UTILITY OR ON-SITE SERVICES, PAYMENT OF SERVICE CHARGES, AND PROVISION FOR INSTALLATION OF TEMPORARY UTILITIES SHALL BE INCLUDED.

LIABILITY OF SUBSTITUTIONS:

PERFORMANCE OF SUBSTITUTIONS MUST BE EQUAL TO THE ITEM SPECIFIED. SHOULD THE SUBSTITUTED ITEM FAIL TO PERFORM ACCORDING TO THE SPECIFICATIONS, REPLACE WITH THE ORIGINALLY SPECIFIED ITEM. NO REQUEST FOR EXTRA COMPENSATION SHALL BE GRANTED.

THE CONTRACTOR IS RESPONSIBLE FOR THE COST OF ANY CHANGES RESULTING FROM APPROVED SUBSTITUTIONS.

2.0 PRODUCTS

BEYOND MATERIAL AND EQUIPMENT SPECIFIED, ALSO PROVIDE INCIDENTAL MATERIALS REQUIRED TO EFFECT COMPLETE INSTALLATION. SUCH INCIDENTAL MATERIALS INCLUDE SOLDER, TAPES, CAULKING, MASTIC, GASKETS, AND SIMILAR ITEMS.

SEALS: FILL ALL CRACKS AND OPEN SPACE BETWEEN FIXTURES AND WALL OR FLOOR WITH NON-ELASTOMERIC SEALER.

FINISH ON EXPOSED PIPES, TRAP, FITTINGS, VALVES, STOPS, ESCUTCHEONS, AND ACCESSORIES SHALL BE CHROME-PLATED BRASS. EXPOSED SHALL INCLUDE ITEMS LOCATED UNDER OPEN COUNTERS AND INSIDE CABINETS WITH DOORS.

BACKING: FOR WALL HUNG LAVATORIES USE JAY R SMITH 0723 CONCEALED ARMS AND PROVIDE 1/4" X 6" WIDE STEEL FLAT PLATE ATTACHED TO BACKING PLATE, DRILLED AND TAPPED TO MATCH FIXTURE HANGER. ATTACH WITH (4) 3/8" X 1 1/4" STEEL BOLTS AND NUTS.

ACCESS DOORS/PANELS

PROVIDE ACCESS DOORS/PANELS WHERE REQUIRED BY AUTHORITIES HAVING JURISDICTION AND BY THE DRAWINGS AND SPECIFICATIONS, INCLUDING BUT NOT LIMITED TO THE FOLLOWING LOCATIONS: ALL CONCEALED VALVES, WATER HAMMER ARRESTORS, UNIONS, ETC. FURNISH FIRE-RATED DOORS WHEN LOCATED IN RATED CONSTRUCTION.

ACCEPTABLE MANUFACTURERS: KARP OR EQUAL.

12" X 12" MIN. FOR WALLS; 24" X 24" FOR CEILINGS.

CLEANOUTS

INSTALL CLEANOUTS AS REQUIRED BY THE CALIFORNIA PLUMBING CODE AND WHERE INDICATED ON DRAWINGS. WALL CLEANOUTS SHALL BE LOCATED 18" ABOVE FINISHED FLOOR.

SIZE CLEANOUT TO MATCH PIPE BEING SERVED, EXCEPT FOR PIPES 4" AND LARGER, CLEANOUTS SHALL BE 4" IN SIZE.

CONDENSATE PIPING

TYPE "M" COPPER TUBING, HARD DRAWN WITH WROUGHT COPPER SWEAT TYPE FITTINGS AND 95-5 LEAD FREE SOLDER. PROVIDE INLINE NEUTRALIZER AT HIGH EFFICIENCY CONDENSING EQUIPMENT. INSULATE WITH 1/2" ARMAFLEX.

DOMESTIC HOT AND COLD WATER PIPING SYSTEM

UNDERGROUND: TYPE "K" COPPER TUBING, HARD TEMPER, COLD DRAWN. COAT PIPE WITH 22 PRIMER ADHESIVE THEN WRAP WITH 10 MIL TAPE AND COAT TAPE WITH 22 PRIMER ADHESIVE. NO EXCEPTIONS.

BELOW FLOOR: TYPE "K" COPPER TUBING, SOFT ANNEALED. NO FITTINGS ALLOWED BELOW SLAB.

ABOVE GROUND: TYPE "L" COPPER TUBING, HARD TEMPER, COLD DRAWN.

FITTINGS, SOLDER & UNIONS

FITTINGS: WROUGHT COPPER OR CAST BRASS SOLDER SWEAT TYPE.

SEALS: USE 95-5 LEAD-FREE SOLDER FOR COPPER PIPING.

UNIONS: SHALL BE INSTALLED AT THE INLET AND OUTLET OF ALL APPARATUS AND EQUIPMENT, AT ALL VALVES, AND ELSEWHERE AS REQUIRED TO FACILITATE REMOVAL OF VALVES AND EQUIPMENT.

DIELECTRIC UNIONS: CONNECTION BETWEEN INCOMPATIBLE MATERIALS, SUCH AS DISSIMILAR METALS, ABOVE GRADE AND INSIDE BUILDING SHALL BE MADE WITH TWO (2) DIELECTRIC UNIONS SEPARATED BY A TWELVE INCH (12") SECTION OF RED BRASS PIPE. DIELECTRIC UNION ISOLATOR FOR CONNECTION PIPING OR NON-COMPATIBLE MATERIALS SHALL BE OF STANDARD COMMERCIAL DESIGN WITH THREADED CONNECTIONS.

INSULATION

INSULATE ALL P-TRAP AND HOT AND COLD WATER ANGLE VALVE ASSEMBLIES ON FIXTURES WHERE TRAP AND SUPPLY PIPING IS EXPOSED OR ACCESSIBLE. INSULATION SHALL BE FULLY MOLDED, WHITE IN COLOR, "PROWRAP" SEAMLESS PREWRAPPED INSULATION KIT AS MANUFACTURED BY MCGUIRE.

VALVES AND IRREGULAR PIPELINE ACCESSORIES SHALL BE INSULATED WITH OVERSIZED SECTIONS OF PIPE INSULATION.

INSERT SECTIONS SHALL BE INSTALLED ON ALL INSULATED PIPING. LOCATE CENTRALLY UNDER EACH HANGER WHERE THE INSULATION RESTS ON THE HANGER. INSERTS SHALL BE AS RECOMMENDED BY MANUFACTURER.

PENETRATION OF ROOF, WALL AND FLOOR

ALL PIPE PENETRATIONS SHALL BE SEALED WITH A PRODUCT THAT WILL SEAL AGAINST THE SPREAD OF FLAME, SMOKE, GASES AND WATER, FOR A RATING EQUIVALENT TO (OR GREATER THAN) THAT OF THE WALL/FLOOR BEING PENETRATED.

ESCUTCHEONS: PROVIDE 1" WIDE CHROME OR NICKEL PLATED PLATES ON ALL PIPES EXPOSED TO VIEW, PASSING THROUGH FLOORS, WALLS, PARTITIONS, ETC. SIZE ESCUTCHEONS TO FIT PIPE AND PIPE COVERING AND TO GIVE A FINISHED APPEARANCE. ESCUTCHEONS SHALL BE HELD IN PLACE BY SET SCREW. PROVIDE PLATES ON PIPES EXTENDING THROUGH SLEEVES.

PIPE ISOLATION

ALL PIPING WHICH IS NOT ISOLATED FROM CONTACT WITH THE BUILDING BY ITS INSULATION SHALL BE INSTALLED WITH A MANUFACTURED TYPE ISOLATOR. ACCEPTABLE MANUFACTURERS: SEMCO, TRISOLATOR, OR EQUAL.

PROVIDE PIPE AND SOUND ISOLATION FOR ALL PIPING THROUGH WALLS. ACCEPTABLE MANUFACTURERS: ACOUSTOPLUMB BY LSP PRODUCTS, HOLDRITE SILENCER BY HUBBARD ENTERPRISES, OR EQUAL.

PIPE SUPPORTS

FOR PIPING 1/2", 3/4" AND 1", FURNISH AND INSTALL THE ACOUSTOPLUMB SYSTEM AS MANUFACTURED BY LSP SPECIALTY PRODUCTS COMPANY.

NO METALLIC PIPES SHALL HAVE METAL-TO-METAL CONTACT WITH HANGERS, CLAMPS, BRACKETS OR ANY OTHER PIPE SUPPORT, OR BE OTHERWISE IN DIRECT CONTACT WITH ANY PART OF THE BUILDING.

WIRE FOR HANGING OR STRAPPING PIPES NOT PERMITTED. SUPPORT EACH RUN OF PIPE INDEPENDENTLY FROM ALL OTHER PIPING.

PLUMBING FIXTURES

FIXTURES SHALL HAVE STOPS OR VALVES. SUPPLY RISERS MAY NOT BE CORRUGATED TUBING.

WATER CONNECTIONS: MUST HAVE RIGID METAL TO METAL CONNECTION. SLIP JOINTS UTILIZING NON-METALLIC WASHERS ARE NOT PERMITTED.

PRESSURE GAUGES

WEKSLER, OR EQUAL, DRAWN STEEL OR BRASS CASE, GLASS LENS, 4½" DIAL, 1% ACCURACY, ANSI B40.1 GRADE 2A, PHOSPHOR BRONZE, BOURDON TUBE, BRASS BOTTOM CONNECTION; WITH WHITE COATED ALUMINUM SCALE WITH PERMANENTLY ETCHED MARKINGS, BLACK GRADUATIONS AND NUMERALS, 270° ARC SCALE; WITH DIAL RANGE APPROXIMATELY TWICE THE WORKING PRESSURE. PROVIDE PRESSURE GAUGE COCKS BETWEEN PRESSURE GAUGES AND GAUGE TEES ON PIPING SYSTEM.

SANITARY SEWER AND STORM DRAIN SYSTEMS

UNDERGROUND: SERVICE WEIGHT CAST IRON, HUBLESS, WITH HEAVY STAINLESS BANDS AND NEOPRENE GASKET AS MANUFACTURED BY MISSION.

ABOVE GROUND:
2 1/2" AND SMALLER: SERVICE WEIGHT CAST IRON HUBLESS WITH STAINLESS STEEL BANDS, SCHEDULE 40 GALVANIZED STEEL PIPE, CAST IRON SCREWED DRAINAGE FITTINGS OR COPPER PIPE WITH DWV FITTINGS AND 95-5 SOLDERED JOINTS.
3" AND LARGER: SERVICE WEIGHT CAST IRON HUBLESS WITH STAINLESS STEEL BANDS OR COPPER PIPE WITH DWV FITTINGS AND 95-5 SOLDERED JOINTS.

HUBLESS/NO-HUB COUPLINGS: HUBLESS CAST IRON COUPLINGS SHALL COMPLY WITH ALL REQUIREMENTS OF FACTORY MUTUAL 1680 CLASS I, 15 PSI WORKING PRESSURE. COUPLINGS SHALL BE CONSTRUCTED OF TYPE 304 STAINLESS STEEL WITH 305 STAINLESS STEEL WORM DRIVE SCREWS. THE GASKET MATERIAL SHALL MEET THE PHYSICAL REQUIREMENTS OF ASTM C564. 4-BAND COUPLINGS TO BE TIGHTENED TO 80 IN-LB TORQUE AND 2 BAND TO 125 IN-LB TORQUE. COUPLINGS SHALL BE MANUFACTURED BY HUSKY OR CLAMP-ALL.

EXTERIOR RAIN WATER LEADERS

COPPER PIPE WITH DWV FITTINGS AND 95-5 SOLDERED JOINTS.

TRAPS

LAVATORIES AND SINK P-TRAPS SHALL BE COMMERCIAL GRADE, CHROME-PLATED CAST BRASS BODY WITH CLEANOUT, WITH 17-GAUGE BRASS ADJUSTABLE WALL BEND, CAST BRASS NIPPLE, 17-GAUGE TUBE, AND CAST BRASS SLIP NUTS. PROVIDE OFFSET STRAINER, AS MANUFACTURED BY MCGUIRE, AT ALL ACCESSIBLE LAVATORIES AND SINKS AND WHERE PLUMBING TRIM IS EXPOSED.

VALVES: DOMESTIC WATER

PROVIDE VALVES WITH FEATURES INDICATED AND WHERE NOT OTHERWISE INDICATED, PROVIDE PROPER VALVE FEATURES AS OUTLINED IN THIS SPECIFICATION. COMPLY WITH ANSI B31.1.

SIZE VALVES TO MATCH UPSTREAM PIPE, UNLESS OTHERWISE INDICATED.

BALL VALVES: MSS SP-110; RATED FOR 600 WOG PRESSURE; FULL PORT. TWO OR THREE PIECE BRONZE BODY CONSTRUCTION, TEFLON SEAT AND SEALS, LOCKING TYPE HANDLE.
VALVES 2" AND SMALLER: NIBCO T/S-685-80-LF, WATTS SERIES LFB6080/LFB6081 OR EQUAL.

BUTTERFLY VALVES: MSS SP-67; RATED AT 200 PSI, BODY CONFORMING TO ASTM A 126, CLASS B. PROVIDE FULL LUG STYLE VALVES WITH FIELD REPLACEABLE EPDM PHENOLIC BACKED SLEEVE, ALUMINUM BRONZE DISC, STAINLESS STEEL STEM, AND EPDM O-RING STEM SEALS. PROVIDE LEVER OPERATORS WITH LOCKS.
VALVES 2-/2" AND LARGER: NIBCO LD-2000, WATTS MODEL BF03-121-45/BF03-121-4G OR EQUAL.

WATER HAMMER ARRESTORS

CONTRACTOR SHALL MAKE EVERY EFFORT TO ALLEVIATE HYDRAULIC SHOCK (WATER HAMMER).

PROVIDE WATER HAMMER ARRESTORS IN WATER LINES TO EQUIPMENT OR FIXTURES HAVING QUICK CLOSING VALVES, FLUSH VALVES, SENSOR OPERATED METERING FAUCETS, MECHANICAL METERING FAUCETS, FOOT PEDAL VALVES, KNEE OPERATED VALVES AND ANY EQUIPMENT THAT MIGHT PRODUCE WATER HAMMER.

LOCATE AND SIZE PER PLUMBING AND DRAINAGE INSTITUTE MANUAL WH-201.

PROVIDE ACCESS PANEL FOR MAINTENANCE AND REPLACEMENT WHEN CONCEALED.

PROVIDE 6" BRASS NIPPLE AT CONNECTIONS TO COPPER LINES.

3.0 EXECUTION

JOB CONDITIONS: REPAIR OR REPLACE, AS DIRECTED BY ARCHITECT, MATERIALS AND PARTS OF PREMISES WHICH BECOME DAMAGED BECAUSE OF INSTALLATION OF WORK OF THIS DIVISION. REMOVE REPLACED PARTS FROM PREMISES.

PROVIDE CARPENTRY, CUTTING, PATCHING, AND CORE DRILLING REQUIRED FOR INSTALLATION OF MATERIAL AND EQUIPMENT SPECIFIED IN THIS DIVISION. DO NOT CUT, CORE OR DRILL STRUCTURAL MEMBERS WITHOUT CONSENT OF STRUCTURAL ENGINEER.

GENERAL PIPING INSTALLATION

CONCEAL ALL PIPING WITHIN FINISHED SPACES, UNLESS OTHERWISE NOTED. INSTALL ALL EXPOSED PIPING PARALLEL TO, OR AT RIGHT ANGLES WITH, BUILDING WALLS AND INSTALL TIGHT TO WALLS OR CEILINGS, UNLESS OTHERWISE NOTED.

VERIFY ALL INVERTS IN PITCHED LINES BEFORE STARTING WORK.

ROUGH-IN WORK: PROCEED AS RAPIDLY AS THE CONSTRUCTION WILL PERMIT. WORK SHALL BE COMPLETED, TESTED AND APPROVED BEFORE BEING ENCLOSED.

THOROUGHLY CLEAN PIPING BEFORE INSTALLATION. CAP ALL PIPE OPENINGS TO EXCLUDE DIRT UNTIL FIXTURES ARE INSTALLED AND FINAL CONNECTIONS MADE.

REAM PIPE ENDS TO REMOVE BURRS, CAREFULLY INSPECT EACH LENGTH OF PIPE, AND REMOVE ALL OBSTRUCTIONS PRIOR TO FABRICATION.

PITCH: INSTALL HORIZONTAL SANITARY AND DRAIN PIPING AT A UNIFORM GRADE OF ONE-QUATER INCH PER FOOT UNLESS OTHERWISE NOTED.

EQUIPMENT BY OTHERS: FOR ROUGH-INS AND FINAL CONNECTIONS TO FIXTURES AND EQUIPMENT FURNISHED UNDER OTHER SECTIONS, ASCERTAIN EXACT SIZES, SERVICES AND LOCATIONS BEFORE STARTING WORK. VERIFY ACCURACY OF WORK SHOWN BEFORE STARTING WORK. CONTRACTOR RESPONSIBLE FOR PROVIDING PROPER INSTALLATION.

COORDINATE THE INSTALLATION OF ACCESS PANELS WITH THE ITEM BEING SERVED. VALVES AND EQUIPMENT LOCATED IN CEILING SPACES SHALL BE ACCESSIBLE AND LOCATED NO MORE THAN 2'-0" ABOVE THE ACCESS PANEL AND WITHIN ARM'S REACH, WHERE POSSIBLE.

POWDER ACTUATED FASTENERS WILL NOT BE ALLOWED. EMBEDS, BEAM CLAMPS, OR DRILLED FASTENERS WILL BE REQUIRED UNLESS OTHERWISE NOTED. SEISMIC BRACING SHALL BE REQUIRED FOR ALL PIPING, SEE SMACNA "SEISMIC RESTRAINT MANUAL: GUIDELINES FOR MECHANICAL SYSTEMS".

PROPERLY SUPPORT ALL MATERIALS, EQUIPMENT AND APPARATUS. ALL HANGERS AND SUPPORTS SHALL HAVE MINIMUM SAFETY FACTOR OF FIVE (5), BASED ON ULTIMATE TENSILE OR COMPRESSIVE STRENGTH, AS APPLICABLE, OF MATERIAL USED. PROVIDE BRACING TO PREVENT LATERAL MOTION OF SUSPEND MATERIALS.

WATER PIPING SHALL NOT BE INSTALLED IN OR UNDER SLAB. (1)

ALL PIPING ON ROOF SHALL BE ANCHORED TO 4"X4" REDWOOD BLOCKING WITH PIPE STRAPS. BLOCKING SHALL BE SET IN MASTIC AT 6'-0" ON CENTER.

PROVIDE PIPE ISOLATION FOR ALL PIPING THROUGH WALLS AND FLOORS. NO PIPING SHALL HAVE DIRECT CONTACT WITH WALLS, CEILINGS, FLOORS, PIPE SUPPORTS, OR HANGERS.

ROOF OPENING

FLASH EACH PIPE EXTENDING THROUGH ROOF WITH PROPERLY SIZED LEAD FLASHING ASSEMBLY. MAKE WATERTIGHT.

TESTING AND ADJUSTING

TEST ALL SYSTEMS IN ACCORDANCE WITH THE GOVERNING PLUMBING CODE AND LOCAL BUILDING DEPARTMENT REQUIREMENTS.

PROVIDE ALL EQUIPMENT REQUIRED FOR TESTING, INCLUDING FITTINGS FOR ADDITIONAL OPERATING.

AFTER THE INSPECTION HAS BEEN APPROVED, OR PORTIONS THEREOF, CERTIFY IN WRITING THE TIME, DATE, NAME, AND TITLE OF THE PERSON REVIEWING THE TEST. INCLUDE THE DESCRIPTION OF WHAT PORTION OF THE SYSTEM HAS BEEN APPROVED.

A COMPLETE RECORD SHALL BE MAINTAINED OF ALL TESTING THAT HAS BEEN APPROVED, AND SHALL BE MADE AVAILABLE AT THE JOB SITE.

UPON COMPLETION OF THE WORK, ALL RECORDS AND CERTIFICATIONS APPROVING TESTING REQUIREMENTS SHALL BE SUBMITTED TO THE ARCHITECT BEFORE FINAL PAYMENT IS MADE.

DEFECTIVE WORK OR MATERIAL SHALL BE REPLACED OR REPAIRED, AS NECESSARY, AND THE INSPECTION AND TEST REPEATED. REPAIRS SHALL BE MADE WITH NEW MATERIALS. NO CAULKING OF SCREWED JOINTS OR HOLES WILL BE ACCEPTABLE.

DISINFECTION OF WATER SYSTEMS

DISINFECT WATER SYSTEMS AS RECOMMENDED BY THE PUBLIC HEALTH DEPARTMENT AND ALL AUTHORITIES HAVING JURISDICTION.

IDENTIFICATION

IDENTIFY ALL PIPING WITH BRADY PERMA-CODE, SETON, OR APPROVED EQUAL, SELF STICKING PIPE MARKERS CONSISTING OF PIPE CONTENT WORDING AND ARROW INDICATING DIRECTION OF FLOW, PER ANSI STANDARD A13.1.

ARROW AND WORDING ARE TWO SEPARATE MARKERS WHICH SHALL BE PLACED IMMEDIATELY ADJACENT TO EACH OTHER.

MARKERS SHALL BE LOCATED 20 FT. APART MAXIMUM ON HORIZONTAL RUNS. THEY SHALL OCCUR WHERE A PIPE ENTERS AND EXITS A CONCEALED SPACE; AT EVERY BRANCH AND RISER TAKEOFF; WITHIN 1 FT. OF EACH VALVE & CONTROL DEVICE; AT EVERY CHANGE IN DIRECTIONAL FLOW; NEAR MAJOR EQUIPMENT ITEMS & OTHER POINTS OF ORIGINATION & TERMINATION.

IDENTIFY ALL CAPPED PIPING AND VALVES WITH 1-1/2" DIAMETER BRASS DISC STAMPED WITH 3/8" HIGH LETTERS SHOWING TYPE OF SERVICE AND VALVE NUMBER. TAGS SHALL BE ATTACHED WITH BRASS CHAIN.

EXCAVATION, TRENCHING AND BACKFILLING

SAFETY REQUIREMENTS: DO ALL SHORING AND PUMPING NECESSARY TO PROTECT EXCAVATION AND SAFETY OF WORKMEN. COMPLY WITH ALL SAFETY REQUIREMENTS OF ALL APPLICABLE AUTHORITIES. PROTECT EXCAVATIONS WITH BARRICADES AS REQUIRED BY APPLICABLE SAFETY REGULATION.

EXCAVATION: PERFORM TRENCHING, SHORING, AND BACKFILLING REQUIRED FOR PROPER LAYING OF PIPES. CUT BOTTOM OF TRENCHES TO GRADE OF PIPE. EXCAVATE BELL HOLES. PROVIDE BEARING FOR ENTIRE LENGTH OF LOWER THIRD OF PIPE. EXCAVATE ROCK AND PEA GRAVEL, WELL TAMPED. CUT TRENCHES AT LEAST 12" WIDER THAN GREATER DIAMETER OF PIPE. PROVIDE CLASS II DRAINAGE ROCK UNDER IRRIGATION PIPING UNDER BUILDING SLABS.

BACKFILLING: PLACE AND COMPACT AS SPECIFIED UNDER DIVISION 2. COVER NO WORK UNTIL INSTALLATION HAS BEEN APPROVED BY THE ARCHITECT. PROVIDE 36" MINIMUM COVER FOR CAST IRON AND STEEL PIPE OUTSIDE BUILDING. REMOVE SURPLUS MATERIAL AS DIRECTED.

COMPLETION

BEFORE FINAL REVIEW:
THE WORK HEREUNDER WILL NOT BE REVIEWED FOR FINAL ACCEPTANCE UNTIL OPERATING AND MAINTENANCE DATA, MANUFACTURER'S LITERATURE, VALVE DIRECTORIES, PIPING IDENTIFICATION CODE DIRECTORY AND NAME PLATES SPECIFIED HEREIN HAVE BEEN APPROVED AND PROPERLY POSTED IN THE BUILDING AND FINAL CLEANING HAS BEEN COMPLETED.

DEMONSTRATION OF OPERATIONS:
WHEN THE INSTALLATION IS COMPLETE AND ADJUSTMENTS SPECIFIED HEREIN HAVE BEEN MADE, OPERATE THE SYSTEMS FOR A PERIOD OF ONE WEEK, DURING WHICH TIME DEMONSTRATE TO THE ARCHITECT THAT SYSTEMS ARE COMPLETED AND OPERATING IN CONFORMANCE WITH THESE SPECIFICATIONS.

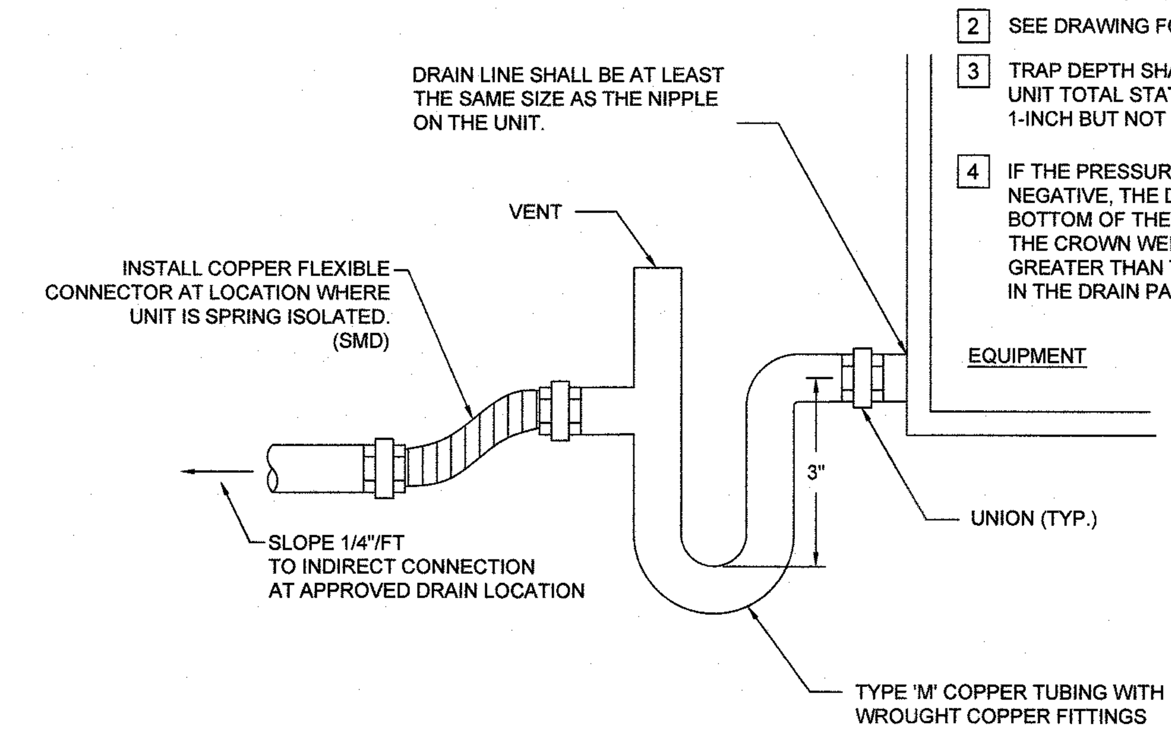

NOTES:

1. ALL CONDENSATE DRAIN LINES INSIDE BUILDING SHALL BE INSULATED IN ACCORDANCE WITH THE REQUIREMENTS OF SECTION 15400, PLUMBING SPECIFICATIONS.
2. SEE DRAWING FOR SIZES.
3. TRAP DEPTH SHALL BE EQUAL TO THE UNIT TOTAL STATIC PRESSURE PLUS 1-INCH BUT NOT LESS THAN 2-INCHES.
4. IF THE PRESSURE IN THE DRAIN PAN IS NEGATIVE, THE DISTANCE FROM THE BOTTOM OF THE AC UNIT DRAIN PAN TO THE CROWN WEIR OF THE TRAP SHALL BE GREATER THAN THE NEGATIVE PRESSURE IN THE DRAIN PAN.

*DO NOT PROVIDE ON EQUIPMENT THAT IS INTERNALLY TRAPPED. CONTRACTOR TO COORDINATE.

1 CONDENSATE DRAIN CONNECTION TO EQUIPMENT
SCALE: NONE

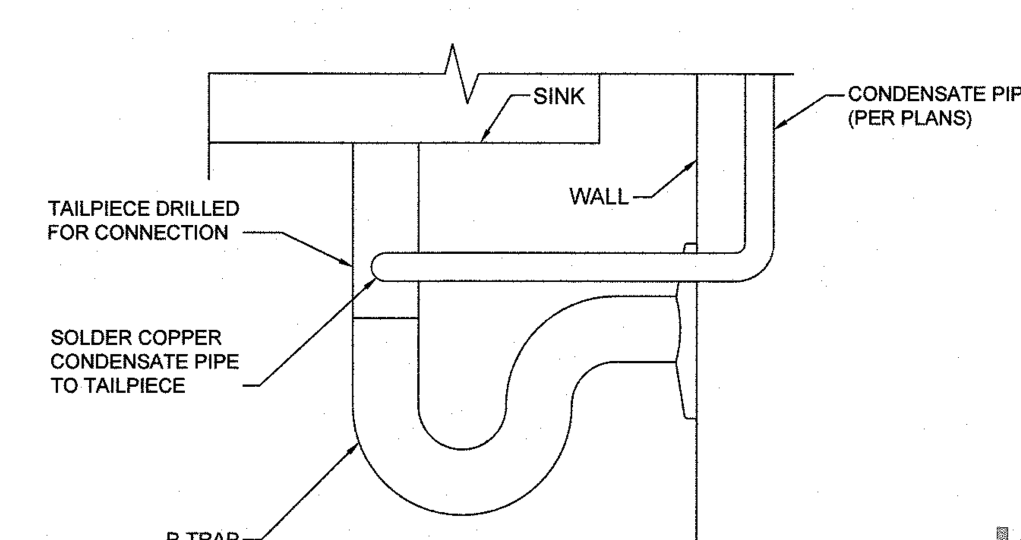

JOB COPY
These plans must be kept on the job at all times.
CITY OF MORGAN HILL
BUILDING DIVISION

3 CONDENSATE DRAIN CONNECTION TO SINK
SCALE: NONE

WESTON MILES
ARCHITECTS
17500 Depot Street, Suite #200
Morgan Hill, CA 95037
1 • 408 • 779 • 6686
• Architecture • Landscape •

LICENSED ARCHITECT CHARLES D. WESTON No. C 10,552 RENEWAL 08-31-19 STATE OF CALIFORNIA
NOT VALID WITHOUT SIGNATURE

H&M MECHANICAL GROUP
8517 Earhart Rd, Suite 230
Oakland, CA 94621
510-569-2000

CONSULTANT JOB NO:

REGISTERED PROFESSIONAL ENGINEER GARY L HENNINGS No. M20245 3/28/2019 MECHANICAL STATE OF CALIFORNIA

REVISIONS
1 03/28/2019 PLAN REVIEW #2

PLUMBING: GENERAL NOTES
MORGAN HILL LIBRARY ADDITION
CITY OF MORGAN HILL
660 W MAIN AVE, MORGAN HILL, CA 95037

These drawings are instruments of service and are the property of WESTON MILES ARCHITECTS, INC. All designs and other information on the drawings are for use on the specified project and shall not be used otherwise without the expressed written permission of WESTON MILES ARCHITECTS, INC.

Written dimensions on these drawings shall have precedence over scaled dimensions. Contractors shall verify and be responsible for all dimensions and conditions on the job and this office shall be notified of any variations from the dimensions and conditions shown by these drawings. Shop details shall be submitted to this office for approval before proceeding with fabrication.

© Copyrighted 2019

DATE: 02/08/2019
JOB NO: 15058

P0.2

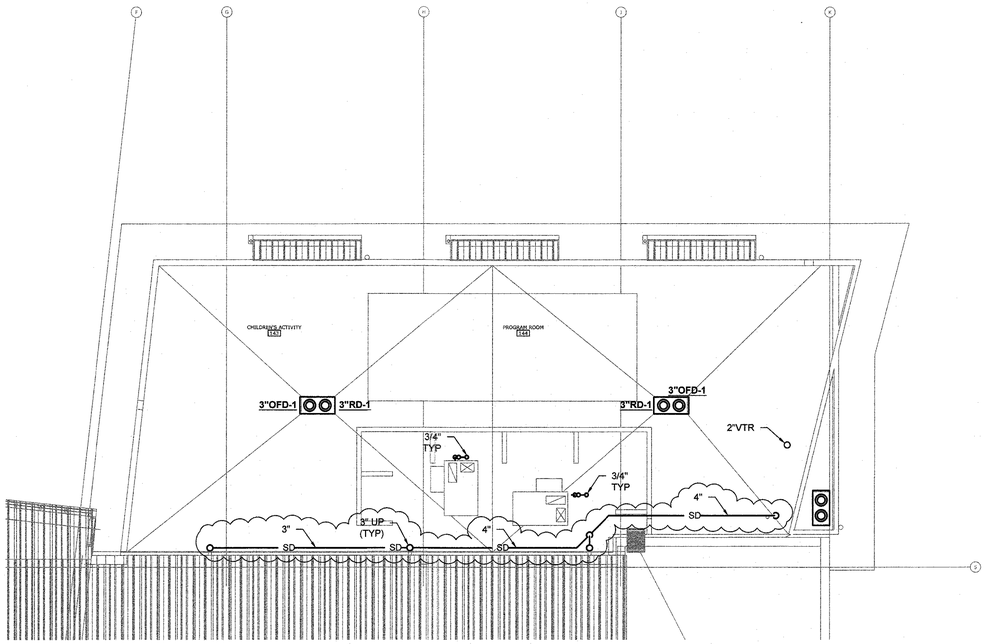

PLUMBING: ROOF PLAN (2)

SCALE: 1/8"=1'-0"

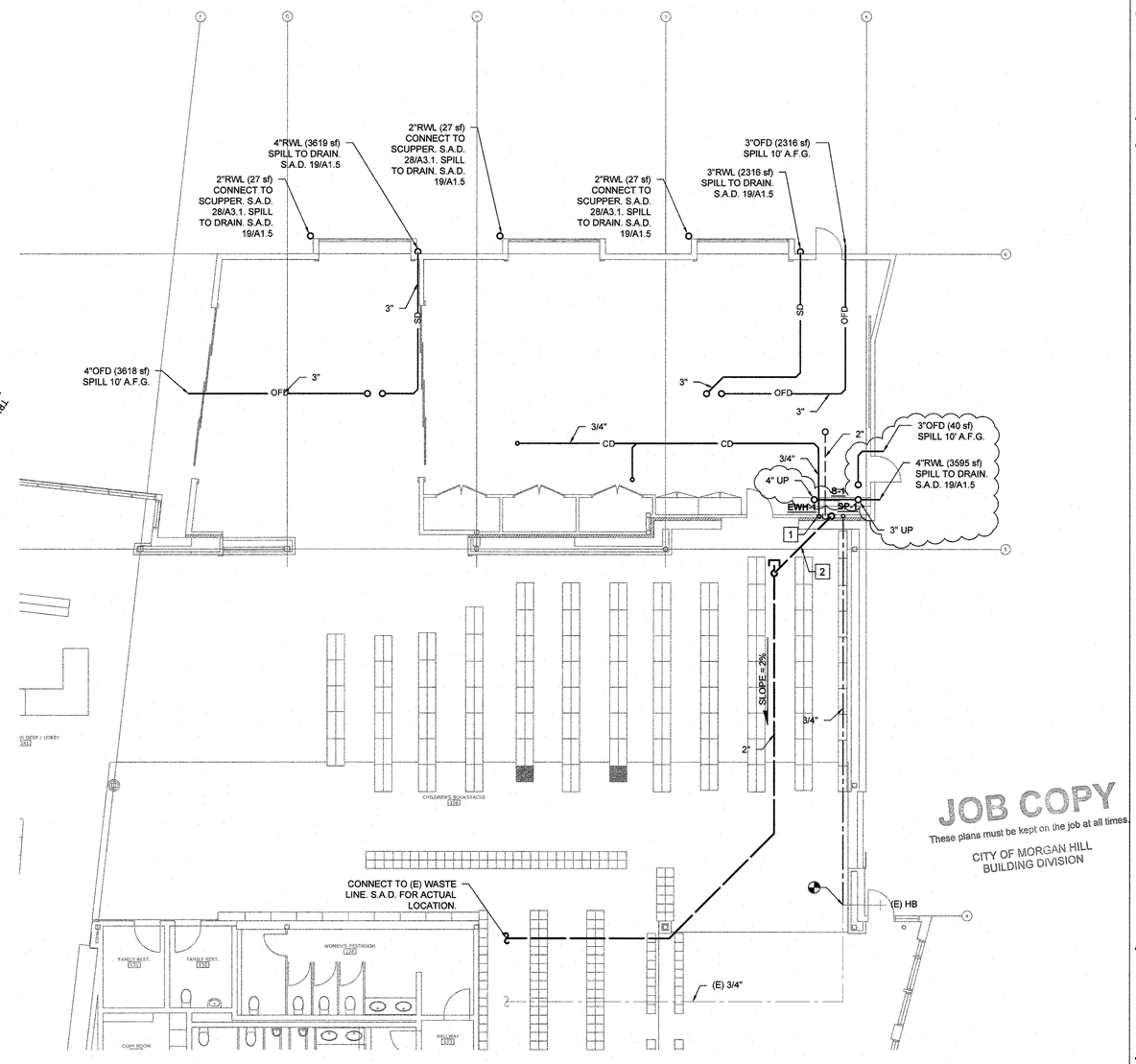

PLUMBING: FLOOR PLAN (1)

SCALE: 1/8"=1'-0"

JOB COPY
These plans must be kept on the job at all times.
CITY OF MORGAN HILL
BUILDING DIVISION

SHEET NOTES:

1. 3/4"CD TO SINK. SEE DETAIL 2/P0.2.
2. 2"W PUMPED FROM SP-1.

WESTON MILES
ARCHITECTS
17500 Depot Street, Suite #200
Morgan Hill, CA 95037
1 • 408 • 779 • 6686
• Architecture • Landscape •

LICENSED ARCHITECT
CHARLES D. MILES
No. C-18,550
RENEWAL 08-31-19
STATE OF CALIFORNIA
NOT VALID WITHOUT SIGNATURE

HM MECHANICAL GROUP
8517 Earhart Rd, Suite 230
Oakland, CA 94621
510-569-2000

CONSULTANT JOB NO.:

REGISTERED PROFESSIONAL ENGINEER
CARL L. HENNINGS
No. M20245
3/28/2019
MECHANICAL
STATE OF CALIFORNIA

REVISIONS

1	03/28/2019	PLAN REVIEW #2

PLUMBING: FLOOR AND ROOF PLANS

MORGAN HILL LIBRARY ADDITION

CITY OF MORGAN HILL
660 W MAIN AVE, MORGAN HILL, CA 95037

These drawings are instruments of service and are the property of WESTON MILES ARCHITECTS, INC. All designs shown on these drawings are the property of the owner on the specified project and shall not be used on other work without the expressed written permission of WESTON MILES ARCHITECTS, INC.

Written dimensions on these drawings shall have precedence over scaled dimensions. Contractors shall verify and be responsible for all dimensions and conditions on the job and this office shall be notified of any variations from the dimensions and conditions shown by these drawings. Shop details shall be submitted to this office for approval before proceeding with fabrication.

© Copyrighted 2019

DATE: 02/08/2019

JOB NO: 15058

P2.1

HVAC LEGEND

SYMBOL	ABBREVIATION	DESCRIPTION
	AFF	ABOVE FINISHED FLOOR
	AL	ACOUSTICALLY LINED
	BOD	BOTTOM OF DUCT
	CFM	CUBIC FEET PER MINUTE
	BDD	DAMPER: BACKDRAFT
	FSD	DAMPER: FIRE/SMOKE
	FD	DAMPER: FIRE
	MVD	DAMPER: MANUAL VOLUME
	Ø	DIAMETER
	DN	DOWN
	DS	DISCONNECT SWITCH
		DUCT SMOKE DETECTOR
	EER	ENERGY EFFICIENCY RATIO
	EA	EXHAUST AIR
	F	FAN
	FLA	FULL LOAD AMPS
	FSD	FIRE SMOKE DAMPER
		FLEXIBLE DUCT
	HP	HORSEPOWER
	MCA	MINIMUM CIRCUIT AMPACITY
	MCP	MAXIMUM OVERCURRENT PROTECTION
	RL	REFRIGERANT LIQUID
	RS	REFRIGERANT SUCTION
	OA	OUTSIDE AIR
	RA	RETURN AIR
	SA	SUPPLY AIR
	TA	TRANSFER AIR
	SEER	SEASONAL EER
	SAD	SEE ARCHITECTURAL DRAWING
	SSD	SEE STRUCTURAL DRAWING
	(CO_2)	SENSOR: CARBON DIOXIDE
	(T)	THERMOSTAT
	TYP	TYPICAL
	UON	UNLESS OTHERWISE NOTED
	WT	WEIGHT
	24x12	RECTANGULAR DUCT - INCHES
	12"	ROUND DUCT - INCHES

HVAC NOTES

1. ENTIRE INSTALLATION SHALL CONFORM TO THE REQUIREMENTS OF THE 2016 EDITION OF CALIFORNIA BUILDING CODES AND ALL OTHER APPLICABLE CODES AND REGULATIONS, INCLUDING 2016 CALIFORNIA GREEN BUILDING STANDARDS (PART 11) AND 2016 CALIFORNIA ENERGY CODES (PART 6).
2. CONTRACTOR SHALL OBTAIN AND PAY FOR ALL REQUIRED FEES, PERMITS AND INSPECTIONS.
3. COORDINATE ENTIRE INSTALLATION OF THE HVAC SYSTEM(S) WITH THE WORK OF ALL OTHER TRADES PRIOR TO ANY FABRICATION OR INSTALLATION. PROVIDE ALL FITTINGS, OFFSETS, AND TRANSITIONS AS REQUIRED FOR A COMPLETE AND WORKABLE INSTALLATION. THE MECHANICAL CONTRACTOR SHALL BE RESPONSIBLE TO COORDINATE ITEMS TO BE PROVIDED BY OTHER TRADES WHERE MENTIONED IN THE CONTRACT DOCUMENTS PRIOR TO BID - NO EXCEPTIONS. THEY SHALL BE RESPONSIBLE FOR A COMPLETE WORKING SYSTEM PER CONTRACT DOCUMENTS.
4. CONTRACTOR TO FIELD VERIFY EXACT SIZE AND LOCATION OF EXISTING EQUIPMENT, DUCTWORK, AND REGISTERS PRIOR TO INSTALLATION OF ANY NEW EQUIPMENT, DUCTWORK OR REGISTERS. IF THE EXISTING DUCTWORK SIZE IS SMALLER THAN THE NEW DUCTWORK SIZE, AND/OR THE EXISTING DUCTWORK IS NOT IN THE NOTED LOCATION, THE CONTRACTOR IS TO NOTIFY OWNER IMMEDIATELY AND NO NEW DUCTWORK IS TO BE INSTALLED UNTIL THE ISSUE IS RESOLVED.
5. COORDINATE THE LOCATIONS OF ALL CEILING DIFFUSERS, REGISTERS, AND GRILLES WITH THE ARCHITECTURAL REFLECTED CEILING PLAN, ELECTRICAL LIGHTING LAYOUT, FIRE SPRINKLER SYSTEM, AND ARCHITECTURAL ROOM ELEVATIONS. THE ARCHITECT AND ENGINEER SHALL BE IMMEDIATELY NOTIFIED OF ANY CONFLICTS PRIOR TO FABRICATION AND INSTALLATION.
6. EQUIPMENT, DUCTS, PIPING, AND OTHER DEVICES AND MATERIALS INSTALLED OUTSIDE OF THE BUILDING OR OTHERWISE EXPOSED TO THE WEATHER SHALL BE COMPLETELY WEATHER PROOFED AND PAINTED TO MATCH. COORDINATE WITH ARCHITECT PRIOR TO PAINTING.
7. DIMENSIONS SHOWN ON THESE PLANS ARE APPROXIMATE AND MUST BE CONFIRMED ON SITE.
8. PRIOR TO OCCUPANCY THE ENTIRE HVAC SYSTEMS SHALL BE BALANCED BY AN INDEPENDENT AIR BALANCE CONTRACTOR FOR AIR IN ACCORDANCE AND PROCEDURES WITH (AABC) ASSOCIATED AIR BALANCE COUNCIL STANDARDS, (NEBB) NATIONAL ENVIRONMENTAL BALANCING BUREAU , OR (TABB) TESTING ADJUSTING AND BALANCING BUREAU. SYSTEMS SHALL BE BALANCED AS INDICATED ON PLANS INCLUDING OUTSIDE AIR VENTILATION. FINAL BALANCING SHALL BE WITHIN 10% FOR SUPPLY, RETURN AND OUTSIDE AIR QUANTITIES INDICATED. WHERE THERE IS A CONFLICT IN PLANS, THE AIR BALANCE CONTRACTOR SHALL NOTIFY THE ENGINEER PRIOR TO BALANCING OF SYSTEM. IF NOT DONE SO THE AIR BALANCE CONTRACTOR SHALL BEAR ALL COSTS INCURRED FOR WORK THAT MUST BE RE-BALANCED DUE TO CONFLICTS ON CONTRACT DOCUMENTS. CONTRACTOR SHALL PROVIDE THREE COPIES OF THE AIR BALANCE REPORT TO THE ENGINEER FOR APPROVAL. PROVIDE PROCEDURES AND REPORTING PER CAL GREEN CODES SECTION 5.410.4.3, SECTION 5.410.4.3.1 AND SECTION 5.410.4.4.
9. CONTROLS CONTRACTOR AND AIR BALANCE CONTRACTOR SHALL COORDINATE WORK AND PERFORM NECESSARY TASKS AS REQUIRED TO OBTAIN AIR FLOW QUANTITIES FOR SYSTEMS SHOWN HEREIN.
10. PROVIDE TO BUILDING OWNER, PER CAL GREEN CODE SECTION 5.410.4.5, AND CMC 514.0, OPERATING PROCEDURES FOR THE USE, INSPECTION, TESTING, AND MAINTENANCE OF EQUIPMENT MANUAL INCLUDING INSPECTION AND REPORTS AS APPLICABLE.
11. COORDINATE THE LOCATION OF ALL ROOF OPENINGS AND THE LOCATION OF ALL ROOF MOUNTED EQUIPMENT WITH THE STRUCTURAL AND ARCHITECTURAL PLANS PRIOR TO ANY FABRICATION AND INSTALLATION.
12. PLATFORMS, CURBS, AND FLASHING FOR MECHANICAL EQUIPMENT SHALL BE AS INDICATED ON THE STRUCTURAL AND ARCHITECTURAL PLANS, UNLESS NOTED OTHERWISE. WHERE THERE IS A CONFLICT WITH THE MECHANICAL PLANS, THE CONTRACTOR SHALL NOTIFY THE ARCHITECT AND ENGINEER PRIOR TO FABRICATION AND INSTALLATION.
13. EQUIPMENT, ACCESSORIES AND RELATED PIPING SHALL BE INSTALLED IN STRICT ACCORDANCE WITH THE EQUIPMENT MANUFACTURER'S RECOMMENDATIONS. PROVIDE ALL FITTINGS, TRANSITIONS, DAMPERS, VALVES, AND OTHER DEVICES REQUIRED FOR A COMPLETE WORKABLE INSTALLATION.
14. MAINTENANCE LABEL SHALL BE AFFIXED TO ALL MECHANICAL EQUIPMENT AND A MAINTENANCE MANUAL SHALL BE PROVIDED FOR THE OWNER'S USE. LABEL SHALL IDENTIFY THE UNIT DESIGNATION PER PLANS AND THE SPACE IT SERVES.
    - 14.1. EQUIPMENT: 4-1/2"X1-1/2" ENGRAVED PLASTIC-LAMIANTE SIGN WITH 1/2" WHITE LETTERS ON BLACK BACKGROUND.
15. PROVIDE MANUAL VOLUME DAMPERS AND BACKDRAFT DAMPERS FOR OUTSIDE AIR INTAKES ON ALL AIR HANDLING EQUIPMENT AND EXHAUST FANS SERVING CONDITIONED SPACES. EXCEPTION: EQUIPMENT WITH FACTORY AIR ECONOMIZERS.
16. OUTSIDE AIR INTAKES SHALL MEET AS A MINIMUM CODE REQUIRED CLEARANCES FROM EXHAUST, FLUE, FUEL BURNING APPLIANCES AND PLUMBING VENT OUTLETS.
17. ALL HVAC EQUIPMENT SERVING NORMALLY OCCUPIED SPACES SHALL HAVE MERV 8 FILTERS UNLESS OTHERWISE NOTED.
18. AIR FILTERS SHALL BE STATE FIRE MARSHALL APPROVED AND LISTED, PREFORMED FILTERS HAVING COMBUSTIBLE FRAMING SHALL BE TESTED AS A COMPLETE ASSEMBLY. INSTALLED FILTERS SHALL BE CLEARLY LABELED BY THE MANUFACTURE INDICATING THE MERV RATING, AND THE FILTER SPECIFICATION SHALL BE INCLUDED IN THE OPERATION AND MAINTENANCE MANUAL. AIR FILTERS SHALL BE ACCESSIBLE FOR CLEANING OR REPLACEMENT.
19. EQUIPMENT WITH MOVING PARTS, FIXED OR FLEXIBLY MOUNTED, SHALL BE PROVIDED WITH FLEXIBLE DUCT AND PIPE CONNECTIONS AND SHALL BE BRACED OR ANCHORED TO COMPLY WITH THE REQUIREMENTS OF TITLE 24.
20. HVAC EQUIPMENT SHALL BE CERTIFIED BY THE CALIFORNIA ENERGY COMMISSION TO COMPLY WITH THE LATEST EFFICIENCY STANDARDS.
21. AC UNITS PROVIDED WITH ECONOMIZER CYCLE DAMPERS SHALL HAVE DAMPERS SET UP TO CLOSE AUTOMATICALLY ON FAN SHUTDOWN. DAMPERS SHALL NOT USE LINKAGE ARRANGEMENT BUT RATHER DIRECT DRIVE ACTUATORS.
22. AIR HANDLING EQUIPMENT SERVING CONDITIONED SPACES SHALL PROVIDE CONTINUOUS OUTSIDE AIR TO SPACES IN OCCUPIED MODE. CONTROLS SHALL BE PROVIDED TO PROVIDE THE MINIMUM RATE OF OUTDOOR AIR REQUIRED BY THE STATE ENERGY REGULATIONS.
23. CONTRACTOR SHALL VERIFY ALL CLEARANCES AND AVAILABLE SPACE FOR DUCTWORK PRIOR TO ORDERING AND/OR FABRICATION.
24. CONTRACTOR TO SUBMIT ALL EQUIPMENT, DUCTWORK, AIR DISTRIBUTION DEVICES, AND OTHER ACCESSORIES TO THE ENGINEER FOR APPROVAL PRIOR TO ANY ORDERING OF SUCH ITEMS.
25. CONTRACTOR SHALL BE RESPONSIBLE FOR ORDERING AIR CONDITIONING EQUIPMENT WITH THE THRU-BASE POWER, CONTROL, AND GAS CONNECTIONS. VERIFY ALL CONNECTION LOCATIONS WITH UNIT MANUFACTURER AND COORDINATE WITH OTHER TRADES AS NECESSARY.
26. COORDINATE ALL WORK WITH THE ARCHITECTURAL, STRUCTURAL DRAWINGS AND DRAWINGS OF OTHER TRADES. INSTALL ALL WORK TO CLEAR NEW AND EXISTING ARCHITECTURAL WORK, STRUCTURAL MEMBERS AND WORK OF OTHER TRADES. NO ITEM SUCH AS PIPE, DUCT, ETC. SHALL BE IN CONTACT WITH ANY EQUIPMENT. ANY ERRORS, OMISSIONS, DISCREPANCIES, DEFICIENCIES, OR CONFLICTS SHALL BE BROUGHT TO THE ATTENTION OF THE GENERAL CONTRACTOR, THE ARCHITECT AND THE ENGINEER PRIOR TO PROCEEDING WITH ANY AFFECTED WORK.
27. CONTROL SCHEMATICS ARE FOR REFERENCE ONLY. REFER TO ELECTRICAL DRAWINGS AND SPECIFICATIONS FOR ELECTRICAL DEVICES REQUIRED AND SEQUENCE OF OPERATION.
28. LINE VOLTAGE WIRING SHALL BE INSTALLED IN CONDUIT. ALL LINE VOLTAGE CONDUIT AND WIRING, INCLUDING FINAL CONNECTIONS, SHALL BE FURNISHED AND INSTALLED BY THE ELECTRICAL CONTRACTOR AS INDICATED ON THE ELECTRICAL DRAWINGS OR SPECIFIED IN THE ELECTRICAL SECTION OF THE SPECIFICATIONS. ALL ELECTRICAL WORK SHALL BE INSTALLED IN ACCORDANCE WITH ALL APPLICABLE CODES AND REGULATIONS OF GOVERNING BODIES HAVING JURISDICTION THEREOF.
29. LOW VOLTAGE CONDUIT AND WIRING AS APPLICABLE, INCLUDING FINAL CONNECTIONS, SHALL BE FURNISHED AND INSTALLED BY THE MECHANICAL CONTRACTOR AS INDICATED ON THE MECHANICAL DRAWINGS OR SPECIFIED IN THE MECHANICAL SECTION OF THE SPECIFICATIONS.
30. LOW VOLTAGE WIRING SHALL BE IN CONDUIT IN CONCEALED WALLS.
31. ELECTRICAL CONTRACTOR SHALL PROVIDE REQUIRED RELAY ACCESSORIES FOR CONNECTION OF 120V/1Ø VENTILATION EQUIPMENT TO 277V/1Ø LIGHTING AS APPLICABLE.
32. THERMOSTATS SHALL HAVE LOCKABLE COVERS (WHERE INDICATED ON PLANS) AND SHALL BE OF THE ELECTRONIC, PROGRAMMABLE, AUTOMATIC CHANGEOVER TYPE TO SEQUENCE HEATING OR COOLING. SET POINT RANGE SHALL BE 10F° BETWEEN FULL HEATING AND COOLING. THEY SHALL HAVE CAPABILITY OF TERMINATING ALL HEATING AT A TEMPERATURE NO MORE THAN 70°F, AND COOLING AT A TEMPERATURE NOT LESS 78°F. ADJUSTABLE TEMPERATURE DIFFERENTIAL SHALL BE 1½F°. CONTROL LIMITS SHALL BE FROM 55°F TO 85°F. MOUNT TOP OF BOX AT NO MORE THAN 42 INCHES ABOVE FLOOR OR AS REQUIRED BY LOCAL AUTHORITIES FOR HANDICAP CODES. IN ADDITION, THERMOSTAT(S) SHALL HAVE THE CAPABILITY TO CONNECT AND RESPOND TO A OCCUPANT CONTROLLED DEMAND RESPONSE SIGNAL OR PRICE SIGNAL FOR RESETTING OF ROOM SETPOINTS.
33. THERMOSTATS THAT ARE PART OF AN ENERGY MANAGEMENT SYSTEM SHALL FOLLOW CONTROL SPECIFICATIONS AND DRAWING REQUIREMENTS.
34. SHOULD THE LOCATION OF THE THERMOSTAT NOT MEET THE ADA HEIGHT REQUIREMENTS DUE TO OBSTRUCTIONS, THEN AN ALTERNATE LOCATION SHALL BE PROPOSED OR REQUESTED BY THE CONTRACTOR THAT SHALL BE APPROVED BY THE ENGINEER AND ARCHITECT.
35. LINE VOLTAGE THERMOSTATS SHALL BE FURNISHED BY THE MECHANICAL CONTRACTOR AND INSTALLED BY THE ELECTRICAL CONTRACTOR.
36. DUCTWORK CONSTRUCTION SHALL MEET 2-INCH WATER COLUMN SYSTEM PRESSURE REQUIREMENTS:
37. ALL SUPPLY, RETURN AND EXHAUST DUCT JOINTS SHALL BE SEALED PER CALIFORNIA MECHANICAL CODE CHAPTER 6 REQUIREMENTS. SEAL CLASS B.
38. RECTANGULAR DUCTWORK SHALL BE SHEET METAL CONSTRUCTED OR SPIRAL ROUND, ERECTED, AND TESTED IN ACCORDANCE WITH THE MOST RESTRICTIVE OF LOCAL REGULATIONS, PROCEDURES DETAILED IN THE ASHRAE HANDBOOK OF FUNDAMENTALS, CHAPTER 6 OF THE CALIFORNIA MECHANICAL CODES, OR THE APPLICABLE STANDARDS ADOPTED BY (SMACNA) SHEET METAL AND AIR CONDITIONING CONTRACTORS NATIONAL ASSOCIATION.
39. ALL FLEXIBLE DUCT SHALL NOT EXCEED FIVE FEET IN LENGTH TO RESPECTIVE DIFFUSERS, GRILLES, OR OTHER AIR DEVICES.
40. AT THE TIME OF ROUGH INSPECTION AND DURING STORAGE ON THE CONSTRUCTION SITE AND UNTIL FINAL STARTUP OF THE HEATING, COOLING AND VENTILATING EQUIPMENT, ALL DUCT AND OTHER RELATED AIR DISTRIBUTION COMPONENTS, OPENINGS SHALL BE COVERED WITH TAPE, PLASTIC, SHEET METAL OR OTHER METHODS TO REDUCE THE AMOUNT OF DEBRIS WHICH MAY COLLECT IN THE SYSTEM.
41. LIMIT USE OF PERMANENT HVAC SYSTEMS DURING CONSTRUCTION TO CONDITIONING NECESSARY FOR MATERIAL AND EQUIPMENT INSTALLATION. IF PERMANENT HVAC IS USED DURING CONSTRUCTION, INSTALL MERV-8 FILTERS ON RETURNS, AND REPLACE ALL FILTERS IMMEDIATELY PRIOR TO OCCUPANCY, OR ,IF THE BUILDING IS OCCUPIED DURING ALTERATION, AT THE CONCLUSION OF CONSTRUCTION.
42. PROVIDE SEISMIC RESTRAINTS TO ALL DUCTWORK, PIPE, AND EQUIPMENT SUPPORTS IN ACCORDANCE WITH THE LATEST SMACNA GUIDELINES FOR SEISMIC RESTRAINT OF MECHANICAL SYSTEMS. SUSPENDED EQUIPMENT SHALL BE PROVIDED WITH SEISMIC ANCHORAGE AND ISOLATION SUPPORTS.
43. RECTANGULAR DUCT TURNS IN SUPPLY, RETURN, AND EXHAUST DUCTS SHALL HAVE TURNING VANES UNLESS OTHERWISE NOTED, OR SHALL HAVE A INNER RADIUS TURN OF NO LESS THAN THE WIDTH OF THE DUCT.
44. DUCTWORK HANDLING CONDITIONED AIR SHALL BE INSULATED OR LINED. INTERIOR DUCTWORK SHALL BE INSULATED WITH A NON-FIBEROUS MATERIAL, R=4.2. ALL SUPPLY AND RETURN DUCTWORK EXPOSED TO WEATHER SHALL BE INTERNALLY LINED WITH 2" THICK DUCT LINER UNLESS OTHERWISE INDICATED OR SPECIFIED. ALL DUCT SIZES INDICATED ON PLANS ARE NET INSIDE DIMENSIONS. ALL INSULATION SHALL HAVE A FLAME SPREAD OF NOT MORE THAN 25 AND A SMOKE DENSITY NOT EXCEEDING 50.
45. MANUAL VOLUME DAMPERS SHALL BE PROVIDED IN ALL DUCT BRANCHES TO INDIVIDUAL DIFFUSERS, GRILLES, AND REGISTERS, AS WELL AS OUTSIDE AIR INTAKE DUCTS. DAMPERS SHALL BE LOCATED AT THE BRANCH DUCT LOCATIONS. THE MECHANICAL CONTRACTOR SHALL COORDINATE LOCATIONS OF DAMPERS WITH THE AIR BALANCING CONTRACTOR PRIOR TO BID, SO AS TO ENSURE ACCESSIBILITY AFTER INSTALLATION. IN LOCATIONS WHERE THESE DAMPERS ARE INACCESSIBLE, CABLE OPERATED ADJUSTMENT CONTROLS SHALL BE PROVIDED AT NO ADDITIONAL COST. OPPOSED BLADE DAMPERS SHALL NOT BE PERMITTED UNLESS OTHERWISE NOTED.
46. DUCT SMOKE DETECTORS FOR AIR MOVING EQUIPMENT HAVING MORE THAN 2000 CFM SHALL HAVE DUCT SMOKE DETECTOR, BUT ARE NOT REQUIRED PER 2016 CMC 608.0 EXCEPTION WHERE ALL AREAS SERVED BY SAID EQUIPMENT HAS DIRECT EGRESS WITHIN 100 FEET.
47. SMOKE DAMPERS SHALL BE CONTROLLED BY (AREA?) SMOKE DETECTORS FURNISHED UNDER DIVISION 26. DUCT MOUNTED SMOKE DETECTORS SHALL BE FURNISHED UNDER DIVISION 26 AND INSTALLED BY MECHANICAL CONTRACTOR. ALL POWER AND SIGNAL WIRING FOR ALARM SYSTEM SHALL BE FURNISHED AND INSTALLED UNDER DIVISION 16. LOW VOLTAGE WIRING AND INTERLOCK FOR SHUT DOWN CONTROLS SHALL BE BY CONTROLS CONTRACTOR.
48. FOR INACCESSIBLE AREAS THE CONTRACTOR SHALL PROVIDE ACCESS PANELS FOR ALL DAMPERS, EQUIPMENT, SMOKE DETECTORS, AND CONTROL DEVICES. THESE PANELS SHALL MATCH THE RATING OF THE WALL AND/OR CEILING THAT THEY ARE LOCATE IN. MINIMUM ACCESS PANEL SIZES SHALL BE 12"X12" FOR HAND ACCESS AND 30"x30" MINIMUM FOR BODY ACCESS. WHERE A LARGER ACCESS PANEL IS REQUIRED DUE TO INSTALLATION CONSTRAINTS OR EQUIPMENT SIZE, THE CONTRACTOR SHALL DO SO AT NO ADDITIONAL COST AND SHALL OBTAIN PRIOR APPROVAL FROM THE ARCHITECT AND ENGINEER.
49. HVAC CONTRACTOR TO REMOVE ALL LEFT OVER DUCTWORK SCRAPES, ETC. (IF ANY) AND LEAVE PREMISES CLEAN AND FREE OF ANY TRASH OR DEBRIS DUE TO THEIR WORK.

JOB COPY
These plans must be kept on the job at all times.
CITY OF MORGAN HILL
BUILDING DIVISION

WESTON MILES
ARCHITECTS
17500 Depot Street, Suite #200
Morgan Hill, CA 95037
1 • 408 • 779 • 6686
• Architecture • Landscape •

LICENSED ARCHITECT
CHARLES D. WESTON
No. C 18,552
RENEWAL 08-31-19
STATE OF CALIFORNIA
NOT VALID WITHOUT SIGNATURE

H&M MECHANICAL GROUP
8517 Earhart Rd, Suite 230
Oakland, CA 94621
510-569-2000

CONSULTANT JOB NO:

REGISTERED PROFESSIONAL ENGINEER
GARY L HENNINGS
No. M20245
3/27/2019
MECHANICAL
STATE OF CALIFORNIA

REVISIONS
1 03/28/2019 PLAN REVIEW #2

HVAC: LEGEND & NOTES

MORGAN HILL LIBRARY ADDITION

CITY OF MORGAN HILL
660 W MAIN AVE, MORGAN HILL, CA 95037

These drawings are instruments of service and are the property of WESTON MILES ARCHITECTS, INC. All designs and other information on the drawings are for use on the specified project and shall not be used otherwise without the expressed written permission of WESTON MILES ARCHITECTS, INC.

Written dimensions on these drawings shall have precedence over scaled dimensions. Contractors shall verify and be responsible for all dimensions and conditions on the job and this office shall be notified of any variations from the dimensions and conditions shown by these drawings. Shop details shall be submitted to this office for approval before proceeding with fabrication.

© Copyrighted 2019

DATE: 02/08/2019

JOB NO: 15058

M0.1

ROOFTOP UNIT SCHEDULE

EQUIP ID	CARRIER MODEL	AIRFLOW (CFM)	ESP (IN WC)	NTC (KBTUH @ ARI)	NSC (KBTUH @ ARI)	TH (KBTUH @ ARI)	SEER/ HSPF	AUX ELECT HT (KW)	MCA	MOP	ELECT	MIN OA	OPER WEIGHT (LBS)	ACCESSORIES
HP-1	50HCQA04	1200	0.7	36.4	25	34.0	15.6/8.0	6.0	21	25	460/3/60	180	600	2-6
HP-2	50HCQA06	1750	0.7	58.5	48.0	55.0	15.0/8.2	6.0	23	25	460/3/60	240	700	1-5

ACCESSORIES (ALL UNITS):
1. DRY BULB AIR ECONOMIZER WITH LOW LEAKAGE DAMPERS AND BAROMETRIC RELIEF, FDD COMPLIANT
2. MERV 8 FILTER
3. DIRECT DRIVE MOTOR
4. 14" HIGH ROOF CURB WITH VIBREX ISOLATION CURB
5. NON-FUSED DISCONNECT SWITCH
6. OA HOOD WITH MVD AND BDD

AIR DISTRIBUTION

STYLE	MFR	MODEL NO	APPLICATION
A	TITUS	OMNI	CEILING SUPPLY DIFFUSER
B	TITUS	PAR	CEILING RETURN DIFFUSER
C	TITUS	CT-540, 6" LONG, 6" NOMINAL DUCT WIDTH	LINEAR BAR RETURN DIFFUSER

DIFFUSER CALL OUT DESCRIPTION:
CFM — AIR QUANTITY
SA-A — TAG
— APPLICATION

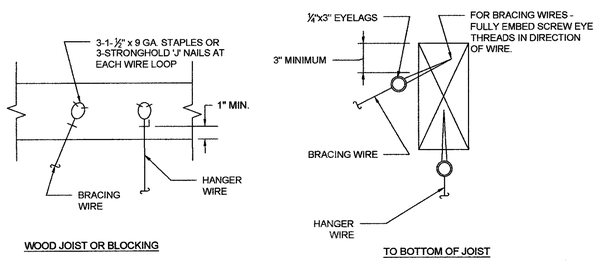

3 UPPER ATTACHMENTS
SCALE: NONE

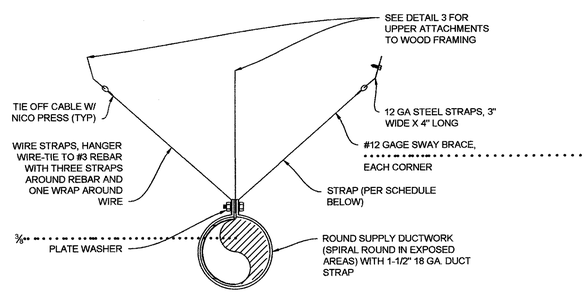

WIRE STRAP SUPPORT SIZES	MAXIMUM SUPPORT SPACING OF 12'
	NOTES: SEISMIC SWAY BRACING REQUIRED FOR EXPOSED DUCTWORK

NOTES: INSTALLATION SHALL COMPLY W/ LATEST SMACNA STANDARDS.

2 DUCT SUPPORT DETAIL
SCALE: NONE

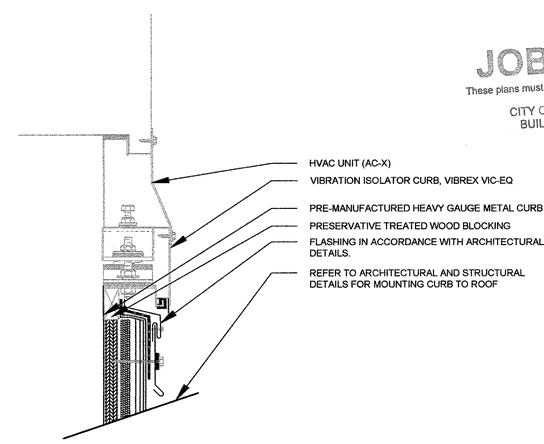

1 PREFABRICATED METAL CURB WITH VIBRATION ISOLATOR CURB AT AC
SCALE: NONE

JOB COPY
These plans must be kept on the job at all times.
CITY OF MORGAN HILL
BUILDING DIVISION

BUILDING DEPT.
MAY 16 2019
CITY OF MORGAN HILL

WESTON MILES
ARCHITECTS
17500 Depot Street, Suite #200
Morgan Hill, CA 95037

LICENSED ARCHITECT
CHARLES D. WESTON
No. C 18,552
EXPIRES 08-31-20
STATE OF CALIFORNIA
NOT VALID WITHOUT SIGNATURE

H&M MECHANICAL GROUP
8517 Earhart Rd, Suite 230
Oakland, CA 94621
510-569-2000

CONSULTANT JOB NO:

REGISTERED PROFESSIONAL ENGINEER
GARY T. HEMMING
No. M020246
5/8/2019
MECHANICAL
STATE OF CALIFORNIA

REVISIONS
1 03/28/2019 PLAN REVIEW #2

HVAC: SCHEDULES & DETAILS

MORGAN HILL LIBRARY ADDITION

CITY OF MORGAN HILL
660 W MAIN AVE, MORGAN HILL, CA 95037

These drawings are instruments of service and are the property of WESTON MILES ARCHITECTS, INC. All designs and other information on the drawings are for use on the specified project and shall not be used otherwise without the written consent and permission of WESTON MILES ARCHITECTS, INC.

Written dimensions on these drawings shall have precedence over scaled dimensions. Contractors shall verify and be responsible for all dimensions and conditions on the job and this office shall be notified of any variations from the dimensions and conditions shown by these drawings. Shop details shall be submitted to this office for approval before proceeding with fabrication.

2019

DATE: 02/08/2019

JOB NO: 15058

M1.1

Packaged AC Unit with Zone Occupancy Monitoring

1. System Overview
   a. Each AC unit will be directly controlled by its own dedicated EMS (Energy Management System) unitary controller.
   b. EMS unitary controller will be connected to a wall mounted electronic zone temperature sensor with integral relative humidity sensor.
   c. Electronic zone temperature sensor shall have a touch screen LCD interface which includes: 1) digital pushbuttons for warmer/cooler setpoint control; 2) visual display of room temperature, room humidity and ambient OSA temperature; and 3) digital pushbutton after-hours override timer control, with user adjustable duration. The after-hours override duration shall have the ability to be limited from the front-end.
2. Occupancy/Vacancy Monitoring
   a. Zone occupancy and vacancy will be actively monitored by connection to Lighting Control System occupancy sensor(s). If available, monitoring shall be accomplished via BACnet system integration. Otherwise, BAS contractor shall monitor auxiliary contacts on Lighting Control System occupancy sensor(s).
3. Unit Fan Operation
   a. When the zone is in Occupied Mode or in Afterhours Mode, the fan shall run continuously, unless Vacant Mode has been triggered.
   b. During the Unoccupied Mode as determined by EMS time schedule, the unit fan cycles with demand and the temperature is controlled by the unoccupied space temperature heating and cooling setpoints.
4. Automatic Demand Reduction Controls
   a. EMS shall be programmed with capability to implement centralized demand shed for all non-critical zones upon call for Automatic Demand Reduction. Critical zones shall not be impacted by demand shed conservation measures.
5. Vacant Mode Control
   a. When the zone has been scheduled for occupancy for at least one hour and the occupancy sensor has confirmed that zone has been vacant for 5 minutes (adjustable: maximum 30 minutes), zone shall be placed into Vacant Mode.
   b. Reset cooling and heating setpoints up and down by 2°F (adjustable) or more.
   c. Minimum Outdoor Air ventilation requirements in the zone need only be maintained 15 minutes out of every 60 minutes while the zone is in Vacant Mode.
   d. Upon detection of occupancy, Vacant Mode shall be cleared.
6. Zone Pre-Occupancy Purge
   a. The EMS shall schedule the zone to be in Occupied Mode one hour prior to the actual time of anticipated occupancy.
7. Heating operation
   a. The controller compares the heating setpoint with the space temperature and determines a need-heating control signal to stage a gas regulating valve on the unit.
   b. Mechanical cooling to be locked out during heating mode.
8. Cooling operation
   a. The controller compares the cooling setpoint with the space temperature and determines a need-cooling signal.
   b. The controller will enable the compressor(s) to maintain the room set point.
   c. Mechanical heating to be locked out during cooling mode.
9. Monitoring - The following conditions shall be monitored and displayed at EMS Operator Workstation/Graphical User Interface:
   a. Supply air temperature.
   b. Room temperature.
   c. Room humidity.
   d. Room occupancy status.
   e. Current mode (heating/cooling/fan).
   f. Supply air temperature attained last time unit was in heating.
   g. Supply air temperature attained last time unit was in cooling.
   h. Current command status of fan, economizer, compressor and gas valve.
   i. Run time meters on fan, compressor, and heat.
   j. Fan Status thru Current Switch.

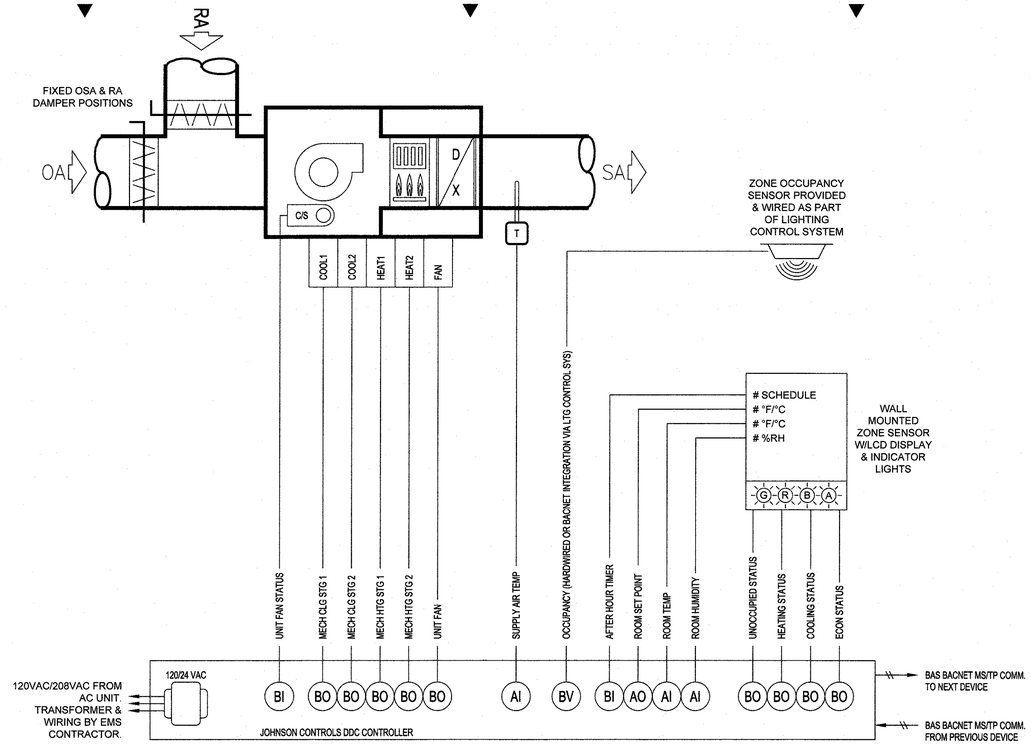

1 PACKAGE AC UNIT W/OCCUPANCY MONITORING

SCALE: NONE

SYSTEM: AC-1

Packaged AC Unit with Economizer, Demand Control Ventilation, Zone Occupancy Monitoring

1. System Overview
   a. Each AC unit will be directly controlled by its own dedicated EMS (Energy Management System) unitary controller.
   b. EMS unitary controller will be connected to a wall mounted electronic zone temperature sensor with integral relative humidity sensor and CO2 sensor.
   c. Electronic zone temperature sensor shall have a touch screen LCD interface which includes: 1) digital pushbuttons for warmer/cooler setpoint control; 2) visual display of room temperature, room humidity, room CO2 and ambient OSA temperature; and 3) digital pushbutton after-hours override timer control, with user adjustable duration. The after-hours override duration shall have the ability to be limited from the front-end.
2. Occupancy/Vacancy Monitoring
   a. Zone occupancy and vacancy will be actively monitored by connection to Lighting Control System occupancy sensor(s). If available, monitoring shall be accomplished via BACnet system integration. Otherwise, BAS contractor shall monitor auxiliary contacts on Lighting Control System occupancy sensor(s).
3. Unit Fan Operation
   a. When the zone is in Occupied Mode or in Afterhours Mode, the fan shall run continuously, unless Vacant Mode has been triggered.
   b. During the Unoccupied Mode as determined by EMS time schedule, the unit fan cycles with demand and the temperature is controlled by the unoccupied space temperature heating and cooling setpoints.
4. Minimum Outdoor Air Ventilation
   a. During Occupied Mode or Afterhours Mode, the economizer damper shall be commanded by the EMS unitary controller to maintain a position which satisfies the Minimum Outdoor Air ventilation requirements for the zone. Damper position(s) determined by Air Balancing Contractor.
5. Demand Control Ventilation
   a. EMS unitary controller will be connected to a wall mounted CO2 sensor to monitor zone CO2 concentration.
   b. During Occupied Mode or Afterhours Mode, the EMS unitary controller shall reset the outside air damper minimum position to maintain the CO2 concentration below 1,000 ppm.
6. Automatic Demand Reduction Controls
   a. EMS shall be programmed with capability to implement centralized demand shed for all non-critical zones upon call for Automatic Demand Reduction. Critical zones shall not be impacted by demand shed conservation measures.
7. Vacant Mode Control
   a. When the zone has been scheduled for occupancy for at least one hour and the occupancy sensor has confirmed that zone has been vacant for 5 minutes (adjustable: maximum 30 minutes), zone shall be placed into Vacant Mode.
   b. Reset cooling and heating setpoints up and down by 2°F (adjustable) or more.
   c. Minimum Outdoor Air ventilation requirements in the zone need only be maintained 15 minutes out of every 60 minutes while the zone is in Vacant Mode.
   d. Upon detection of occupancy, Vacant Mode shall be cleared.
8. Zone Pre-Occupancy Purge
   a. The EMS shall schedule the zone to be in Occupied Mode one hour prior to the actual time of anticipated occupancy.
9. Heating operation
   a. The controller compares the heating setpoint with the space temperature and determines a need-heating control signal to stage a gas regulating valve on the unit.
   b. Economizer to be commanded to Min CFM setpoint and mechanical cooling to be locked out during heating mode.
10. Cooling operation
   a. The controller compares the cooling setpoint with the space temperature and determines a need-cooling signal.
   b. The first stage of cooling will enable the economizer to provide free cooling for as long as possible.
   c. The second stage will enable the compressor(s) to maintain the room set point.
   d. Mechanical heating to be locked out during cooling mode.
11. Fault Detection Diagnostics
   a. The EMS DDC Controller shall monitor the following economizer actuator Fault Detection Diagnostic conditions and broadcast results via EMS network:
   i. Temperature Sensor Failure/Fault
   ii. Economizer not economizing when enabled
   iii. Economizer economizing when disabled
   iv. Economizer damper modulation failure
   v. Excess outdoor air
12. Monitoring - The following conditions shall be monitored and displayed at EMS Operator Workstation/Graphical User Interface:
   a. Supply air temperature.
   b. Room temperature.
   c. Room humidity.
   d. Room CO2 concentration.
   e. Room occupancy status.
   f. Current mode (heating/cooling/fan).
   g. Supply air temperature attained last time unit was in heating.
   h. Supply air temperature attained last time unit was in cooling.
   i. Current command status of fan, economizer, compressor and gas valve.
   j. Run time meters on fan, compressor, and heat.
   k. Fan Status thru Current Switch.
   l. Economizer actuator feedback status.

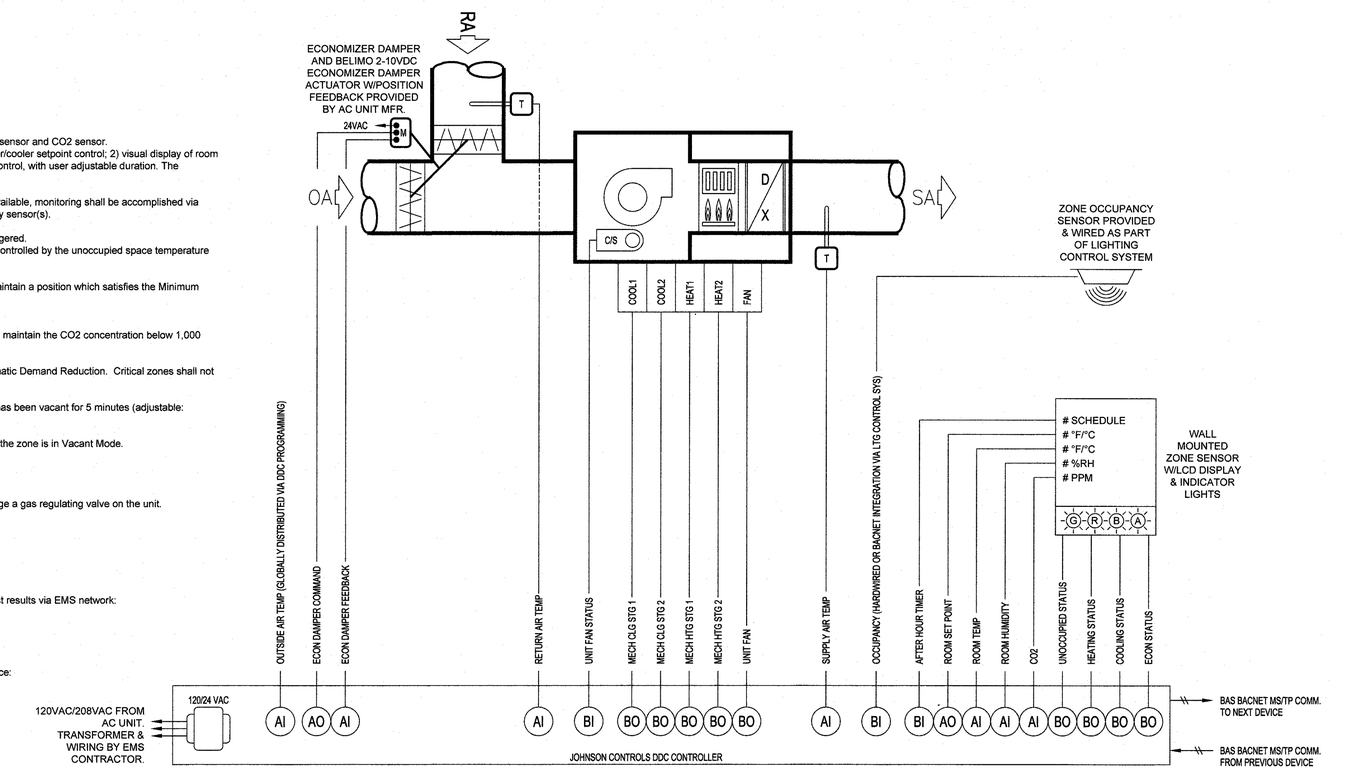

2 PACKAGE AC UNIT W/DEMAND CONTROL VENTILATION & OCCUPANCY MONITORING

SCALE: NONE

SYSTEM: AC-2

JOB COPY
These plans must be kept on the job at all times.
CITY OF MORGAN HILL
BUILDING DIVISION

WESTON MILES
ARCHITECTS
17500 Depot Street, Suite #200
Morgan Hill, CA 95037
1 • 408 • 779 • 6686
• Architecture • Landscape •

LICENSED ARCHITECT CHARLES D. WESTON No. C 18,552 RENEWAL 08-31-20 STATE OF CALIFORNIA

NOT VALID WITHOUT SIGNATURE

HM MECHANICAL GROUP
8517 Earhart Rd. Suite 230
Oakland, CA 94621
510-569-2000

CONSULTANT JOB NO:

REGISTERED PROFESSIONAL ENGINEER JOHN T. HENNINGER No. M20245 3/27/2019 MECHANICAL STATE OF CALIFORNIA

REVISIONS

1 03/28/2019 PLAN REVIEW #2

HVAC: CONTROLS

MORGAN HILL LIBRARY ADDITION

CITY OF MORGAN HILL
660 W MAIN AVE, MORGAN HILL, CA 95037

These drawings are instruments of service and are the property of WESTON MILES ARCHITECTS, INC. All designs and other information on the drawings are for use on the specified project only and shall not be used otherwise without the expressed written permission of WESTON MILES ARCHITECTS, INC.

Written dimensions on these drawings shall have precedence over scale dimensions. Contractors shall verify and are responsible for all dimensions and conditions on the job and this office shall be notified of any variations from the dimensions and conditions shown by these drawings. Shop details shall be submitted to this office for approval before proceeding with fabrication.

© Copyrighted 2019

DATE: 02/08/2019

JOB NO.: 15058

M1.2

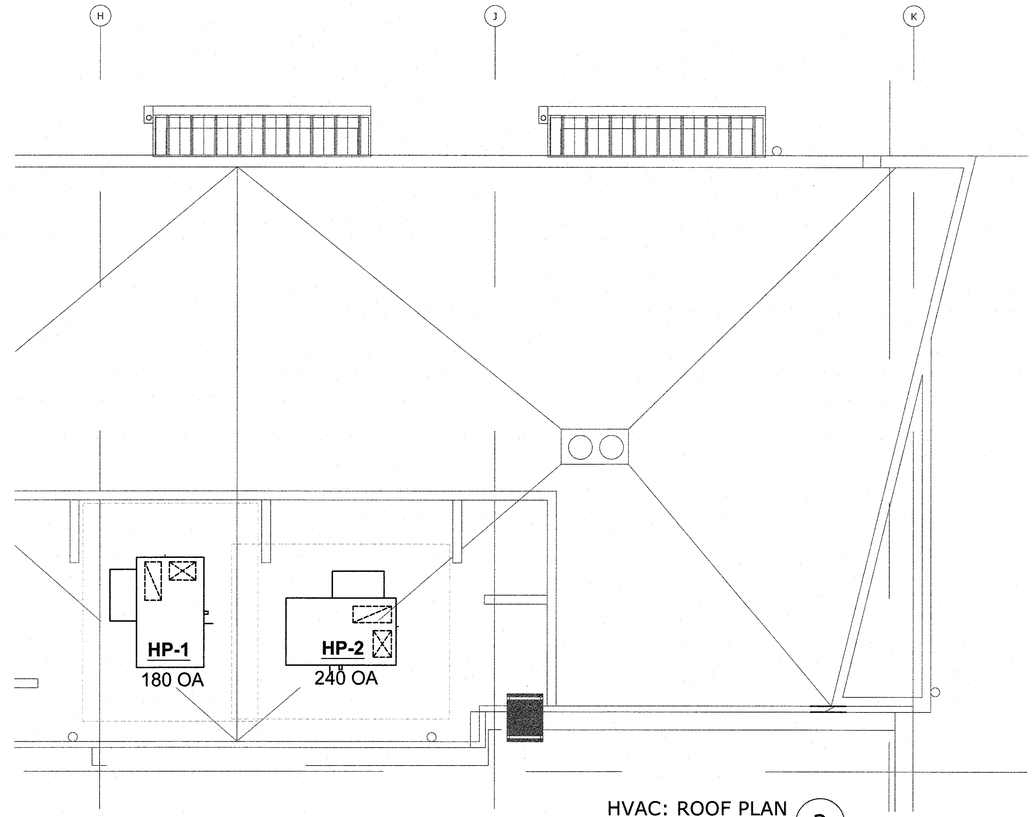

HVAC: ROOF PLAN (2)
SCALE: 1/4"=1'-0"

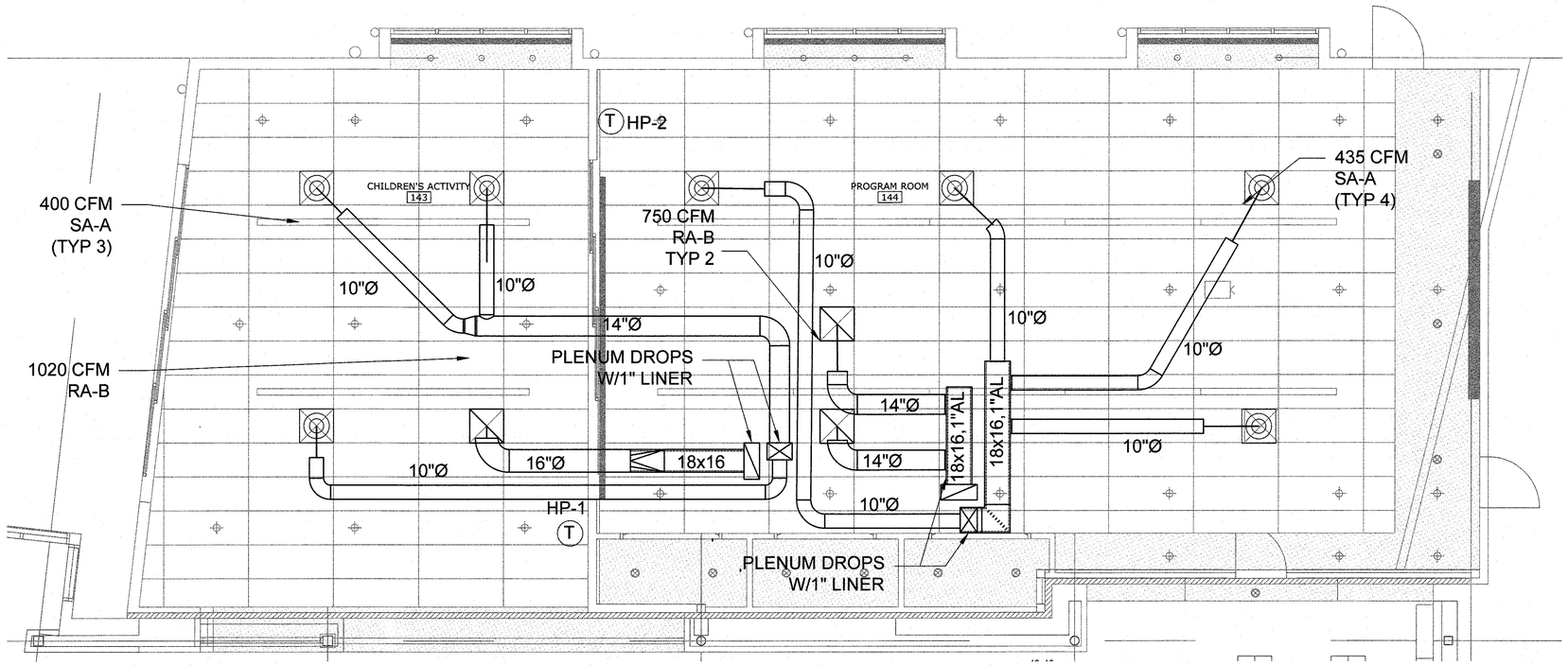

HVAC: FLOOR PLAN (1)
SCALE: 1/8"=1'-0"

TRUE NORTH

JOB COPY
These plans must be kept on the job at all times.
CITY OF MORGAN HILL
BUILDING DIVISION

WESTON MILES
ARCHITECTS
17500 Depot Street, Suite #200
Morgan Hill, CA 95037
1 • 408 • 779 • 6686
• Architecture • Landscape •

LICENSED ARCHITECT
CHARLES D. WESTON
No. C 18,552
RENEWAL 08-31-20
STATE OF CALIFORNIA
NOT VALID WITHOUT SIGNATURE

HM MECHANICAL GROUP
8517 Earhart Rd. Suite 230
Oakland, CA 94621
510-569-2000

CONSULTANT JOB NO:

REGISTERED PROFESSIONAL ENGINEER
JAMY L. HENNINGS
P No. 020245
3/27/2019
MECHANICAL
STATE OF CALIFORNIA

REVISIONS
1 03/28/2019 PLAN REVIEW #2

HVAC: FLOOR AND ROOF PLANS

MORGAN HILL LIBRARY ADDITION

CITY OF MORGAN HILL
660 W MAIN AVE, MORGAN HILL, CA 95037

These drawings are instruments of service and are the property of WESTON MILES ARCHITECTS, INC. All designs and other information on the drawings are for use on this specified project and shall not be used otherwise without the expressed written permission of WESTON MILES ARCHITECTS, INC.

Written dimensions on these drawings shall have precedence over scaled dimensions. Contractors shall verify and be responsible for all dimensions and conditions on the job and this office shall be notified of any variations from the dimensions and conditions shown by these drawings. Shop details shall be submitted to this office for approval before proceeding with fabrication.

© Copyrighted 2019

DATE: 02/08/2019

JOB NO: 15058

M2.1

STATE OF CALIFORNIA
ENVELOPE COMPONENT APPROACH
CEC-NRCC-ENV-01-E (Revised 01/16) CALIFORNIA ENERGY COMMISSION

CERTIFICATE OF COMPLIANCE	NRCC-ENV-01-E
Envelope Component Approach	(Page 1 of 4)
Project Name: Morgan Hill Library Expansion	Date Prepared: 2/23/2018

A. GENERAL INFORMATION

01	Project Location:	660 West Main Ave	06	Compliance Method:	☑ Component ☐ Unconditioned (file Affidavit)
02	CA City and Zip Code:	Morgan Hill, 95037	07	Building Front Orientation (deg or cardinal):	0 deg
03	Climate Zone:	4	08	Phase of Construction:	☐ New Construction ☑ Addition ☐ Alteration
04	Total Conditioned Floor Area:	6,429	09	Building Occupancy:	☑ Nonresidential ☐ High-Rise Residential ☐ Hotel/Motel Guest Room
05	Building Type:	☐ Schools (Public School) ☐ Relocatable Public School Bldg. ☑ Conditioned Spaces ☐ Unconditioned Spaces ☐ Skylight Area for Large Enclosed Space > 5000 ft² (If checked include the NRCC-ENV-04-E with submittal)			

B. ENVELOPE DETAILS – FRAMED

01	02	03	04	05	06	07	08		09	10	11
							Appendix JA 4 Reference		Proposed	Required	
Tag/ID	Assembly Type	Frame Material	Frame Depth	Frame Spacing	Cavity R-value	Continuous Insulation R-value	Table	Cell	U-Factor	U-Factor from Tables 140.3-B, C or D	Field Inspection Comments
1	Roof	Wood	2x4 @ 16		30	0.0	4.2.1	-A8	0.032	0.034	R-30 Roof Attic
2	Wall	Metal	2x6 @ 16		21	14.0	4.3.3	-A7	0.051	0.062	R-21 Wall Metal Stud

C. ENVELOPE DETAILS – NON-FRAMED

01	02	03	04	05	06	07		08	09	10
						Appendix JA4 Reference		Proposed	Required	
Tag/ID	Assembly Type	Assembly Materials	Thickness (inches)	Interior or Core Insulation R-value	Continuous Insulation R-value	Table	Cell	U-Factor	U-Factor from Tables 140.3-B, C or D	Field Inspection Comments

STATE OF CALIFORNIA
ENVELOPE COMPONENT APPROACH
CEC-NRCC-ENV-01-E (Revised 01/16) CALIFORNIA ENERGY COMMISSION

CERTIFICATE OF COMPLIANCE	NRCC-ENV-01-E
Envelope Component Approach	(Page 2 of 4)
Project Name: Morgan Hill Library Expansion	Date Prepared: 2/23/2018

D. ENVELOPE DETAILS – MASS

01	02	03	04	05	06	07	08		09	10	11
							Appendix JA4 Reference		Proposed	Required	
Tag/ID	Mass Type	Density (lb/ft³)	Mass Thickness (inches)	Furring Strip Thickness (inches)	Interior Insulation R-value	Exterior Insulation R-value	Table	Cell	U-factor	U-Factor from Tables 140.3-B, C or D	Field Inspection Comments

E. ROOFING PRODUCTS (COOL ROOF)

01	02	03	04	05		06	07	08	09	10	11
				Proposed				Minimum Required			
Mass Roof 25 lb/ft² or Greater	Roof Pitch	CRRC Product ID Number	Product Type	Aged Solar Reflectance		Thermal Emittance	SRI² (Optional)	Aged Solar Reflectance	Thermal Emittance	SRI (optional)	Comments
☐	0 / 12			☐¹	0.63	0.75		0.63	0.75		R-30 Roof Attic
☐				☐¹							
☐				☐¹							

☐ An aged solar reflectance less than 0.63 is allowed provided the maximum roof / ceiling U-factor in TABLE 140.3 is not exceeded

☐ High-rise residential buildings and Hotels and Motels with low-sloped roofs in Climate Zones 1 through 8, 12 and 16 are exempted from aged Solar Reflectance and thermal emittance requirements.

☐ High-rise residential buildings and Hotels/Motels with steep-sloped roofs in Climate Zones 1 and 16 are exempt from aged Solar Reflectance and thermal emittance requirements.

☐ The roof area covered by building integrated photovoltaic panels and building integrated solar thermal panels are exempt from aged Solar Reflectance and thermal emittance requirements

To apply Liquid Field Applied Coatings, the coating must be applied across the entire roof surface and meet the dry mil thickness or coverage recommended by the coatings manufacturer and meet minimum performance requirements listed in §110.8(i)4. Select the applicable coating:

☐ Aluminum-Pigmented Asphalt Roof Coating ☐ Cement-Based Roof Coating ☐ Other ____________

NOTES:
1. *Check the box if the aged Solar reflectance was not available in the Cool Roof Rating Council's Rated Product Directory, Then use the equation in Section 110.8(i)2 where the Initial Reflectance value from the same directory and use the equation (0.2+B($\rho_{initial}$ – 0.2) to obtain a calculated aged solar reflectance value. Where **p** is the Initial Solar Reflectance and **B** is either set to 0.65 for Field-Applied Coatings or it is set to 0.70 for all other roofing products other than Field-Applied Coating.*
2. *Calculate the SRI Value by using the SRI Calculator Worksheet at (http://energy.ca.gov/title24/2016standards/documents/solar_reflectance/) and enter the resulting value in the SRI column above and attach a copy of the SRI-Worksheet (NRCC-ENV-03-E) to the to this compliance document.*

STATE OF CALIFORNIA
ENVELOPE COMPONENT APPROACH
CEC-NRCC-ENV-01-E (Revised 01/16) CALIFORNIA ENERGY COMMISSION

CERTIFICATE OF COMPLIANCE	NRCC-ENV-01-E
Envelope Component Approach	(Page 3 of 4)
Project Name: Morgan Hill Library Expansion	Date Prepared: 2/23/2018

F. AIR BARRIER

01	02	03	04	05
Name	Air Barrier Material Type	Air Barrier Assembly Type	Whole Building Air Leakage Testing	Comments

G. FENESTRATION PROPOSED AREAS AND EFFICIENCIES

01	02	03	04	05	06	07	08	09	10	11	12
					Proposed						
Tag/ID	Fenestration Type	Surface Area	Orientation N, S, W, E or Roof	# of Panes	Max U-Factor	Max (R) SHGC	Min VT	Label	Overhang	Condition Status	Comments
1	Low E	262	N	2	0.36	0.25	0.50	NFRC	No	New	
2	Low E	277	E	2	0.36	0.25	0.50	NFRC	No	New	
3	Low E	183	E	2	0.36	0.25	0.50	NFRC	No	New	
4	Low E	189	N	2	0.36	0.25	0.50	NFRC	No	New	
5	Low E	189	N	2	0.36	0.25	0.50	NFRC	No	New	
6	Low E	57	W	2	0.36	0.25	0.50	NFRC	No	New	
7	Low E	100	E	2	0.36	0.25	0.50	NFRC	No	New	
8	Low E	213	W	2	0.36	0.25	0.50	NFRC	No	New	

H. ENVELOPE MANDATORY MEASURES

Indicate location on building plans of Mandatory Envelope Measures Note Block: ENV-MM

INSTRUCTIONS TO APPLICANT ENVELOPE COMPLIANCE & WORKSHEETS (check box if worksheet are included)

For detailed instructions on the use of this and all Energy Efficiency Standards compliance documents, please refer to theEnergy Commission website.

☑	NRCC-ENV-01-E	Certificate of Compliance. Required on plans for all submittals.
☐	NRCC-ENV-04-E	Use when minimum skylight requirements for large enclosed spaces are required in climate zones 2 through 15. Optional on plans.

STATE OF CALIFORNIA
ENVELOPE COMPONENT APPROACH
CEC-NRCC-ENV-01-E (Revised 01/16) CALIFORNIA ENERGY COMMISSION

CERTIFICATE OF COMPLIANCE	NRCC-ENV-01-E
Envelope Component Approach	(Page 3 of 4)
Project Name: Morgan Hill Library Expansion	Date Prepared: 2/23/2018

F. AIR BARRIER

01	02	03	04	05
Name	Air Barrier Material Type	Air Barrier Assembly Type	Whole Building Air Leakage Testing	Comments

G. FENESTRATION PROPOSED AREAS AND EFFICIENCIES

01	02	03	04	05	06	07	08	09	10	11	12
					Proposed						
Tag/ID	Fenestration Type	Surface Area	Orientation N, S, W, E or Roof	# of Panes	Max U-Factor	Max (R) SHGC	Min VT	Label	Overhang	Condition Status	Comments
9	Low E	30	S	2	0.36	0.25	0.50	NFRC	No	New	

H. ENVELOPE MANDATORY MEASURES

Indicate location on building plans of Mandatory Envelope Measures Note Block: ENV-MM

INSTRUCTIONS TO APPLICANT ENVELOPE COMPLIANCE & WORKSHEETS (check box if worksheet are included)

For detailed instructions on the use of this and all Energy Efficiency Standards compliance documents, please refer to theEnergy Commission website.

☑	NRCC-ENV-01-E	Certificate of Compliance. Required on plans for all submittals.
☐	NRCC-ENV-04-E	Use when minimum skylight requirements for large enclosed spaces are required in climate zones 2 through 15. Optional on plans.

STATE OF CALIFORNIA
ENVELOPE COMPONENT APPROACH
CEC-NRCC-ENV-01-E (Revised MM/YY) CALIFORNIA ENERGY COMMISSION

CERTIFICATE OF COMPLIANCE	NRCC-ENV-01-E
Envelope Component Approach	(Page 4 of 4)
Project Name: Morgan Hill Library Expansion	Date Prepared: 2/23/2018

DOCUMENTATION AUTHOR'S DECLARATION STATEMENT

1. I certify that this Certificate of Compliance documentation is accurate and complete.

Documentation Author Name: Gary Hennings	Documentation Author Signature: [signature]
Company: H & M Mechanical Group	Signature Date: 2/23/2018
Address: 8517 Earhart Rd	CEA/ HERS Certification Identification (if applicable):
City/State/Zip: Oakland, CA 94621	Phone: 510.569.2000

RESPONSIBLE PERSON'S DECLARATION STATEMENT

I certify the following under penalty of perjury, under the laws of the State of California:
1. The information provided on this Certificate of Compliance is true and correct.
2. I am eligible under Division 3 of the Business and Professions Code to accept responsibility for the building design or system design identified on this Certificate of Compliance (responsible designer).
3. The energy features and performance specifications, materials, components, and manufactured devices for the building design or system design identified on this Certificate of Compliance conform to the requirements of Title 24, Part 1 and Part 6 of the California Code of Regulations.
4. The building design features or system design features identified on this Certificate of Compliance are consistent with the information provided on other applicable compliance documents, worksheets, calculations, plans and specifications submitted to the enforcement agency for approval with this building permit application.
5. I will ensure that a completed signed copy of this Certificate of Compliance shall be made available with the building permit(s) issued for the building, and made available to the enforcement agency for all applicable inspections. I understand that a completed signed copy of this Certificate of Compliance is required to be included with the documentation the builder provides to the building owner at occupancy.

Responsible Designer Name: Charles Weston	Responsible Designer Signature: [signature]
Company: Weston Miles	Date Signed: 02/23/2018
Address: 17500 Depot Street, Suite #120	License: C 18552
City/State/Zip: Morgan Hill, CA 95037	Phone: 408.779.6686

ENVELOPE MANDATORY MEASURES: NONRESIDENTIAL — ENV-MM

Project Name	Date
Morgan Hill Library Expansion	*2/23/2018*

DESCRIPTION

Building Envelope Measures:

§110.8(a):	Installed insulating material shall have been certified by the manufacturer to comply with the California Quality Standards for insulating material, Title 20 Chapter 4, Article 3.
§110.8(c):	All Insulating Materials shall be installed in compliance with the flame spread rating and smoke density requirements of Sections 2602 and 707 of Title 24, Part 2.
§110.8(g):	Heated slab floors shall be insulated according to the requirements in Table 110.8-A.
§110.7(a):	All Exterior Joints and openings in the building that are observable sources of air leakage shall be caulked, gasketed, weatherstripped or otherwise sealed.
§110.6(a):	Manufactured fenestration products and exterior doors shall have air infiltration rates not exceeding 0.3 cfm/ft.² of window area, 0.3 cfm/ft.² of door area for residential doors, 0.3 cfm/ft.² of door area for nonresidential single doors (swinging and sliding), and 1.0 cfm/ft.² for nonresidential double doors (swinging).
§110.6(a):	Fenestration U-factor shall be rated in accordance with NFRC 100, or the applicable default U-factor.
§110.6(a) :	Fenestration SHGC shall be rated in accordance with NFRC 200, or NFRC 100 for site-built fenestration, or the applicable default SHGC.
§110.6(b):	Site Constructed Doors, Windows and Skylights shall be caulked between the unit and the building, and shall be weatherstripped (except for unframed glass doors and fire doors).
§120.7(a):	The opaque portions of the roof/ceiling that separates conditioned spaces from unconditioned spaces or ambient air shall meet the applicable U-Factor requirements as follows: **Metal Building-** The weighted average U-factor of the roof assembly shall not exceed 0.098. **Wood Framed and Others-** The weighted average U-factor of the roof assembly shall not exceed 0.075.
§120.7(b):	The opaque portions of walls that separate conditioned spaces from unconditioned spaces or ambient air shall meet the applicable U-factor as follows: **Metal Building-** The weighted average U-factor of the wall assembly shall not exceed 0.113. **Metal Framed-** The weighted average U-factor of the wall assembly shall not exceed 0.151. **Light Mass Walls-** A 6 inch or greater Hollow Core Concrete Masonry Unit shall have a U-factor not to exceed 0.440. **Heavy Mass Walls-** An 8 inch or greater Hollow Core Concrete Masonry Unit shall have a U-factor not to exceed 0.690. **Wood Framed and Others-** The weighted average U-factor of the wall assembly shall not exceed 0.110. **Spandrel Panels and Opaque Curtain Wall-** The weighted average U-factor of the spandrel panels and opaque curtain wall assembly shall not exceed 0.280. **Demising Walls-**. The opaque portions of framed demising walls shall meet the requirements of Item A or B below: A. Wood framed walls shall be insulated to meet a U-factor not greater than 0.099. B. Metal Framed walls shall be insulated to meet a U-factor not greater than 0.151.
§120.7(c):	The opaque portions of floors and soffits that separate conditioned spaces from unconditioned spaces or ambient air shall meet the applicable U-Factor requirements as follows: **Raised Mass Floors-** Shall have a minimum of 3 inches of lightweight concrete over a metal deck or the weighted average U-factor of the floor assembly shall not exceed 0.269. **Other Floors-**The weighted average U-factor of the floor assembly shall not exceed 0.071.

JOB COPY
These plans must be kept on the job at all times.
CITY OF MORGAN HILL
BUILDING DIVISION

WESTON MILES
ARCHITECTS
17500 Depot Street, Suite #200
Morgan Hill, CA 95037
1 • 408 • 779 • 6686
• Architecture • Landscape •

LICENSED ARCHITECT CHARLES D. WESTON No. C 18,552 RENEWAL 08-31-19 STATE OF CALIFORNIA

NOT VALID WITHOUT SIGNATURE

H&M MECHANICAL GROUP
8517 Earhart Rd, Suite 230
Oakland, CA 94621
510-569-2000

CONSULTANT JOB NO:

REGISTERED PROFESSIONAL ENGINEER GARY L HENNINGS No. M20245 3/27/2019 MECHANICAL STATE OF CALIFORNIA

REVISIONS

1 — 03/28/2019 PLAN REVIEW #2

TITLE 24

MORGAN HILL LIBRARY ADDITION

CITY OF MORGAN HILL
660 W MAIN AVE, MORGAN HILL, CA 95037

These drawings are instruments of service and are the property of WESTON MILES ARCHITECTS, INC. All designs and other information on the drawings are for use on the specified project and shall not be used otherwise without the expressed written permission of WESTON MILES ARCHITECTS, INC.

Written dimensions on these drawings shall have precedence over scaled dimensions. Contractors shall verify and be responsible for all dimensions and conditions on the job and this office shall be notified of any variations from the dimensions and conditions shown by these drawings. Shop details shall be submitted to this office for approval before proceeding with fabrication.

© Copyrighted 2019

DATE: 02/08/2019

JOB NO: 15058

T24.1

STATE OF CALIFORNIA
MECHANICAL SYSTEMS
CEC-NRCC-MCH-01-E (Revised 01/16) CALIFORNIA ENERGY COMMISSION

CERTIFICATE OF COMPLIANCE	NRCC-MCH-01-E
Mechanical Systems	(Page 1 of 4)
Project Name: Morgan Hill Library Expansion	Date Prepared: 2/23/2018

A. MECHANICAL COMPLIANCE DOCUMENTS & WORKSHEETS (check box if worksheet is included)

For detailed instructions on the use of this and all Energy Efficiency Standards compliance forms, refer to the 2016 Nonresidential Manual
Note: The Enforcement Agency may require all forms to be incorporated onto the building plans.

YES	NO	Comp. Doc./Worksheet #	Title
☑	☐	NRCC-MCH-01-E (Part 1 of 3)	Certificate of Compliance, Declaration. Required on plans for all submittals.
☑	☐	NRCC-MCH-01-E (Part 2 of 3)	Certificate of Compliance, Required Acceptance Tests (MCH-02-A to 11-A). Required on plans for all submittals.
☑	☐	NRCC-MCH-01-E (Part 3 of 3)	Certificate of Compliance, Required Acceptance Tests (MCH-12-A to 18-A). Required on plans where applicable.
☑	☐	NRCC-MCH-02-E (Part 1 of 2)	Mechanical Dry Equipment Summary is required for all submittals with Central Air Systems. It is optional on plans.
☑	☐	NRCC-MCH-02-E (Part 2 of 2)	Mechanical Wet Equipment Summary is required for all submittals with chilled water, hot water or condenser water systems. It is optional on plans.
☑	☐	NRCC-MCH-03-E	Mechanical Ventilation and Reheat is required for all submittals with multiple zone heating and cooling systems. It is optional on plans.
☐	☑	NRCC-MCH-07-E (Part 1 of 2)	Power Consumption of Fans. Required on plans where applicable
☐	☑	NRCC-MCH-07-E (Part 2 of 2)	Power Consumption of Fans, Declaration. Required on plans where applicable

STATE OF CALIFORNIA
MECHANICAL SYSTEMS
CEC-NRCC-MCH-01-E (Revised 01/16) CALIFORNIA ENERGY COMMISSION

CERTIFICATE OF COMPLIANCE	NRCC-MCH-01-E
Mechanical Systems	(Page 2 of 4)
Project Name: Morgan Hill Library Expansion	Date Prepared: 2/23/2018

B. MECHANICAL HVAC ACCEPTANCE FORMS (check box for required compliance documents)

Test Performed By:

Designer:
This compliance document is to be used by the designer and attached to the plans. Listed below are all the acceptance tests for HVAC systems. The designer is required to check the applicable boxes for all acceptance tests that apply and list all equipment that requires an acceptance test. All equipment of the same type that requires a test, list the equipment description and the number of systems.

Installing Contractor:
The contractor who installed the equipment is responsible to either conduct the acceptance test themselves or have a qualified entity run the test for them. If more than one person has responsibility for the acceptance testing, each person shall sign and submit the Certificate of Acceptance applicable to the portion of the construction or installation for which they are responsible.

Enforcement Agency:
Plancheck – The NRCC-MCH-01-E compliance document is not considered a completed document and is not to be accepted by the building department unless the correct boxes are checked.
Inspector - Before occupancy permit is granted all newly installed process systems must be tested to ensure proper operations.

Test Description		MCH-02-A	MCH-03-A	MCH-04-A	MCH-05-A	MCH-06-A	MCH-07-A	MCH-08-A	MCH-09-A	MCH-10-A	MCH-11-A
Equipment Requiring Testing or Verification	# of Units	Outdoor Air	Single Zone Unitary	Air Distribution Ducts	Economizer Controls	Demand Control Ventilation (DCV)	Supply Fan VAV	Valve Leakage Test	Supply Water Temp. Reset	Hydronic System Variable Flow Control	Automatic Demand Shed Control
50HCQA060-5-	3	☑	☑	☐	☑	☑	☐	☐	☐	☐	☐
50HCQA040-5	2	☑	☑	☐	☐	☐	☐	☐	☐	☐	☐
		☐	☐	☐	☐	☐	☐	☐	☐	☐	☐
		☐	☐	☐	☐	☐	☐	☐	☐	☐	☐
		☐	☐	☐	☐	☐	☐	☐	☐	☐	☐
		☐	☐	☐	☐	☐	☐	☐	☐	☐	☐
		☐	☐	☐	☐	☐	☐	☐	☐	☐	☐
		☐	☐	☐	☐	☐	☐	☐	☐	☐	☐
		☐	☐	☐	☐	☐	☐	☐	☐	☐	☐
		☐	☐	☐	☐	☐	☐	☐	☐	☐	☐

STATE OF CALIFORNIA
MECHANICAL SYSTEMS
CEC-NRCC-MCH-01-E (Revised 01/16) CALIFORNIA ENERGY COMMISSION

CERTIFICATE OF COMPLIANCE	NRCC-MCH-01-E
Mechanical Systems	(Page 3 of 4)
Project Name: Morgan Hill Library Expansion	Date Prepared: 2/23/2018

C. MECHANICAL HVAC ACCEPTANCE FORMS (check box for required compliance documents)

Test Performed By:

Designer:
This compliance document is to be used by the designer and attached to the plans. Listed below are all the acceptance tests for HVAC systems. The designer is required to check the applicable boxes for all acceptance tests that apply and list all equipment that requires an acceptance test. All equipment of the same type that requires a test, list the equipment description and the number of systems.

Installing Contractor:
The contractor who installed the equipment is responsible to either conduct the acceptance test themselves or have a qualified entity run the test for them. If more than one person has responsibility for the acceptance testing, each person shall sign and submit the Certificate of Acceptance applicable to the portion of the construction or installation for which they are responsible.

Enforcement Agency:
Plancheck – The NRCC-MCH-01-E compliance document is not considered a completed document and is not to be accepted by the building department unless the correct boxes are checked.
Inspector - Before occupancy permit is granted all newly installed process systems must be tested to ensure proper operations.

Test Description		MCH-12-A	MCH-13-A	MCH-14-A	MCH-15-A	MCH-16-A	MCH-17-A	MCH-18-A
Equipment Requiring Testing or Verification	# of Units	Fault Detection & Diagnostics for DX Units	Automatic Fault Detection & Diagnostics for Air & Zone	Distributed Energy Storage DX AC Systems	Thermal Energy Storage (TES) Systems	Supply Air Temperature Reset Controls	Condenser Water Reset Controls	ECMS
50HCQA060-5-(	3	☑	☐	☐	☐	☐	☐	☐
50HCQA040-5-	2	☐	☐	☐	☐	☐	☐	☐
		☐	☐	☐	☐	☐	☐	☐
		☐	☐	☐	☐	☐	☐	☐
		☐	☐	☐	☐	☐	☐	☐
		☐	☐	☐	☐	☐	☐	☐
		☐	☐	☐	☐	☐	☐	☐
		☐	☐	☐	☐	☐	☐	☐
		☐	☐	☐	☐	☐	☐	☐
		☐	☐	☐	☐	☐	☐	☐

STATE OF CALIFORNIA
MECHANICAL SYSTEMS
CEC-NRCC-MCH-01-E (Revised 01/16) CALIFORNIA ENERGY COMMISSION

CERTIFICATE OF COMPLIANCE	NRCC-MCH-01-E
Mechanical Systems	(Page 4 of 4)
Project Name: Morgan Hill Library Expansion	Date Prepared: 2/23/2018

DOCUMENTATION AUTHOR'S DECLARATION STATEMENT

1. I certify that this Certificate of Compliance documentation is accurate and complete.

Documentation Author Name: Gary Hennings	Documentation Author Signature: [signature]
Company: H & M Mechanical Group	Signature Date: 2/23/2018
Address: 8517 Earhart Rd	CEA/ HERS Certification Identification (if applicable):
City/State/Zip: Oakland, CA 94621	Phone: 510.569.2000

RESPONSIBLE PERSON'S DECLARATION STATEMENT

I certify the following under penalty of perjury, under the laws of the State of California:
1. The information provided on this Certificate of Compliance is true and correct.
2. I am eligible under Division 3 of the Business and Professions Code to accept responsibility for the building design or system design identified on this Certificate of Compliance (responsible designer).
3. The energy features and performance specifications, materials, components, and manufactured devices for the building design or system design identified on this Certificate of Compliance conform to the requirements of Title 24, Part 1 and Part 6 of the California Code of Regulations.
4. The building design features or system design features identified on this Certificate of Compliance are consistent with the information provided on other applicable compliance documents, worksheets, calculations, plans and specifications submitted to the enforcement agency for approval with this building permit application.
5. I will ensure that a completed signed copy of this Certificate of Compliance shall be made available with the building permit(s) issued for the building, and made available to the enforcement agency for all applicable inspections. I understand that a completed signed copy of this Certificate of Compliance is required to be included with the documentation the builder provides to the building owner at occupancy.

Responsible Designer Name: Gary Hennings	Responsible Designer Signature: [signature]
Company : H&M Mechanical Group	Date Signed: Gary Hennings
Address: 8517 Earhart Rd, Suite 230	License: M20245
City/State/Zip: Oakland, CA 94621	Phone: 510.569.2000

JOB COPY
These plans must be kept on the job at all times.
CITY OF MORGAN HILL
BUILDING DIVISION

WESTON MILES
ARCHITECTS
17500 Depot Street, Suite #200
Morgan Hill, CA 95037
1 • 408 • 779 • 6686
• Architecture • Landscape •

LICENSED ARCHITECT
CHARLES D. WESTON
No. C 18,552
RENEWAL 08-31-19
STATE OF CALIFORNIA
NOT VALID WITHOUT SIGNATURE

H&M MECHANICAL GROUP
8517 Earhart Rd, Suite 230
Oakland, CA 94621
510-569-2000

CONSULTANT JOB NO:

REGISTERED PROFESSIONAL ENGINEER
GARY L. HENNINGS
No. M20245
3/27/2019
MECHANICAL
STATE OF CALIFORNIA

REVISIONS
1 03/28/2019 PLAN REVIEW #2

TITLE24
MORGAN HILL LIBRARY ADDITION
CITY OF MORGAN HILL
660 W MAIN AVE, MORGAN HILL, CA 95037

These drawings are instruments of service and are the property of WESTON MILES ARCHITECTS, INC. All designs and other information on the drawings are for use on the specified project and shall not be used otherwise without the expressed written permission of WESTON MILES ARCHITECTS, INC.

Written dimensions on these drawings shall have precedence over scaled dimensions. Contractors shall verify and be responsible for all dimensions and conditions on the job and this office shall be notified of any variations from the dimensions and conditions shown by these drawings. Shop details shall be submitted to this office for approval before proceeding with fabrication.

© Copyrighted 2019

DATE: 02/08/2019
JOB NO: 15058

T24.2

GENERAL CONSTRUCTION NOTES

1. CONTRACTOR SHALL COMPLY WITH ALL APPLICABLE CODES AND REGULATIONS. MATERIALS AND EQUIPMENT SHALL BE U.L. LISTED AND LABELED FOR THE APPLICATION.
2. THE CONTRACTOR SHALL OBTAIN AND PAY FOR ALL PERMITS, LICENSES AND INSPECTION FEES REQUIRED BY THIS CONTRACT WORK.
3. CONTRACTOR SHALL VISIT THE PROJECT SITE PRIOR TO BIDDING AND ALLOW FOR ALL FIELD CONDITIONS. THE CONTRACTOR SHALL BE RESPONSIBLE FOR ALL ELECTRICAL WORK NOTED AND CALLED OUT ON ALL CONTRACT DOCUMENTS. THE CONTRACTOR SHALL OBTAIN INFORMATION AND BE FAMILIAR WITH ALL OTHER TRADES WORK. THE CONTRACTOR SHALL BE RESPONSIBLE FOR COORDINATION BETWEEN OTHER TRADES ON PROJECT.
4. CONTRACTOR SHALL BE RESPONSIBLE FOR THE SAFETY OF PERSONS AND PROPERTY AND SHALL PROVIDE INSURANCE COVERAGE AS NECESSARY FOR LIABILITY AND PERSONAL, PROPERTY DAMAGE, TO FULLY PROTECT THE OWNER, ARCHITECT AND ENGINEER FROM ANY AND ALL CLAIMS RESULTING FROM THIS WORK.
5. CONTRACTOR SHALL MAINTAIN RECORD DRAWINGS AT THE PROJECT SITE INDICATING ALL MODIFICATIONS TO ELECTRICAL SYSTEMS. THE CONTRACTOR SHALL AT THE CONCLUSION OF THE PROJECT PROVIDE ACCURATE "AS-BUILT" DRAWINGS ACCEPTABLE TO THE ARCHITECT.
6. ALL MATERIALS PROVIDED TO THE PROJECT SHALL BE NEW. THE CONTRACTOR SHALL BE RESPONSIBLE TO PROVIDE AND INSTALL ALL INCIDENTAL MATERIALS REQUIRED FOR A COMPLETE INSTALLATION.
7. CONTRACTOR SHALL PROVIDE TO THE ARCHITECT A CONSTRUCTION SCHEDULE OF ELECTRICAL WORK. THE CONSTRUCTION SCHEDULE SHALL IDENTIFY ALL SIGNIFICANT MILESTONES WITH COMPLETION DATES.
8. CONTRACTOR SHALL PROVIDE ALL REQUIRED "CUTTING, PATCHING, EXCAVATION, BACKFILL AND REPAIRS" NECESSARY TO RESTORE DAMAGED SURFACES TO EQUAL OR BETTER THAN ORIGINAL CONDITIONS EXISTING AT START OF WORK.
9. CONTRACTOR SHALL BE RESPONSIBLE FOR PAINTING ALL EXPOSED CONDUITS AND ELECTRICAL EQUIPMENT. REFER TO ARCHITECTS PAINTING SECTION FOR REQUIREMENTS.
10. ALL ELECTRICAL EQUIPMENT INSTALLED OUTDOORS SHALL BE WEATHERPROOF. EXTERIOR CONDUITS RUN INTO BUILDINGS SHALL BE INSTALLED WITH FLASHING, CAULKED AND SEALED. CONDUITS FOR EXTERIOR ELECTRICAL DEVICES SHALL BE RUN INSIDE BUILDING UNLESS OTHERWISE NOTED ON DRAWINGS.
11. ALL CONDUITS UNLESS OTHERWISE NOTED ON DRAWINGS SHALL HAVE AS A MINIMUM: TWO (2) #12s WITH ONE (1) #12 GROUND. "TICK" MARKS SHOWN ON CIRCUITRY ARE FOR ROUGH ESTIMATING ONLY. THE CONTRACTOR SHALL BE RESPONSIBLE FOR ALL WIRES AND WIRE SIZES REQUIRED BY LATEST CODE.
12. ALL BRANCH CIRCUITS SHALL HAVE INDIVIDUAL NEUTRALS. SHARED NEUTRALS ON MULTIWIRE CIRCUITS IS NOT ALLOWED.
13. ALL 120/277V LIGHT SWITCHES AND WALL OCCUPANT SENSORS SHALL HAVE A NEUTRAL INSTALLED TO THE DEVICE BOX EXCEPT WHERE A CONDUIT OR SURFACE RACEWAY SYSTEM IS INSTALLED.
14. COORDINATE ALL CONDUIT RUNS, ELECTRICAL EQUIPMENT AND PANELS WITH ALL OTHER WORK TO AVOID CONFLICTS.
15. SEE ARCHITECTURAL DOCUMENTS FOR EXACT PLACEMENT OF LIGHTING FIXTURES AND DEVICES. THE ELECTRICAL CONTRACTOR SHALL BE RESPONSIBLE FOR VERIFICATION OF CEILING TYPES FROM ARCHITECTURAL DOCUMENTS AND PROVIDE AND INSTALL ALL REQUIRED FIXTURE MOUNTING HARDWARE. PROVIDE AND INSTALL U.L. LISTED FIRE STOP ENCLOSURES FOR ALL RECESSED FIXTURES IN FIRE RATED CEILINGS.
16. FROM ALL NEW FLUSH MOUNT PANELS; THE CONTRACTOR SHALL STUB UP INTO ACCESSIBLE CEILING SPACE A MINIMUM OF FOUR (4) 3/4" CONDUITS FOR FUTURE USE.
17. CONTRACTOR SHALL PROVIDE IN EVERY NEW EMPTY CONDUIT A DRAW STRING FOR USE IN FUTURE CONSTRUCTION.
18. ALL CONDUIT SHALL BE CONCEALED WHERE POSSIBLE. CUT AND PATCH EXISTING WALLS WHERE NECESSARY. WHERE IT IS NECESSARY TO CUT OR BORE EXISTING STRUCTURAL WALLS FOR NEW ELECTRICAL WORK OBTAIN PERMISSION FROM THE ARCHITECT PRIOR TO STARTING WORK. REUSE (E) CONDUIT WHERE POSSIBLE.
19. WHERE IT IS NOT POSSIBLE TO REUSE (E) CONDUIT OR RUN (N) CONCEALED CONDUIT USE NON-METALLIC SURFACE RACEWAY AND BOXES. ROUTING OF ALL NON-METALLIC RACEWAYS SHALL BE APPROVED BY THE ARCHITECT OR OWNER'S REPRESENTATIVE PRIOR TO ROUGH-IN.
20. EXTENSION RINGS OR RESET BOXES TO BE FLUSH WITH NEW WALL THICKNESS.
21. CONTRACTOR SHALL BE RESPONSIBLE FOR ALL DAMAGE TO (E) UNDERGROUND SYSTEMS (GAS, WATER, TELEPHONE, ELECTRICAL, SEWER, ETC.). THE CONTRACTOR SHALL REPAIR & PAY ALL EXPENSES FOR DAMAGE TO (E) UNDERGROUND SYSTEMS AS A RESULT OF (N) WORK. REPAIR TO DAMAGED UNDERGROUND SYSTEMS SHALL BE TO THE OWNERS SATISFACTION WITHOUT EXTRA EXPENSE TO THE OWNER.
22. EXISTING WIRING SHOWN HAS BEEN TAKEN FROM OLD PLANS AND IS ASSUMED TO BE CORRECT. ELECTRICAL CONTRACTOR SHALL FIELD VERIFY ACTUAL CONDITIONS AND MAKE ADJUSTMENTS TO SUIT ACTUAL CONDITIONS AND TO MEET THE INTENT OF THE CONTRACT DOCUMENTS.
23. WHERE NON-METALLIC SHEATHED CONDUCTORS ARE FOUND, THE CONTRACTOR SHALL REMOVE TO FULLEST EXTENT PER THE GENERAL DEMOLITION NOTES AND REPLACE WITH CONDUIT. METAL CLAD CABLE WILL BE PERMITTED ON A CASE-BY-CASE BASIS ONLY BY WRITTEN APPROVAL FROM THE ARCHITECT.
24. ALL INSTALLATION OF EXPOSED SURFACE MOUNTED RACEWAY IN PUBLIC AREAS SHALL BE REVIEWED BY ELECTRICAL ENGINEER BEFORE ROUGH-IN. CONTRACTOR IS TO DETERMINE THE ACCESSIBILITY OF ATTIC, FURRED SPACE, HOLLOW MULLIONS, ETC. IN EACH AREA AND REVIEW WITH ENGINEER. IF SYSTEM CAN BE ROUTED CONCEALED EITHER BY FISHING OR ACCESSIBILITY, CONTRACTOR IS TO DO SO. IF INACCESSIBILITY IS DETERMINED, CONTRACTOR SHALL INSTALL SURFACE MOUNTED RACEWAY IN THE MOST AESTHETICALLY PLEASING MEANS AS DETERMINED BY THE THE ENGINEER. NO ALLOWANCE FOR ADDITIONAL COMPENSATION DUE TO ROUTING AS DIRECTED BY THE ENGINEER WILL BE MADE.

LIGHT FIXTURE SCHEDULE

FIXTURE NOTES:

1. ALL LED LIGHT FIXTURE DRIVERS SHALL BE ELECTRONIC TYPE, 10% TOTAL HARMONIC DISTORTION MAXIMUM.
2. ALL LED LIGHT MODULES SHALL BE ENERGY SAVING 3500° K, 80 CRI MINIMUM, U.O.N. (SEE SPECIFICATIONS FOR MORE INFORMATION).
3. ALL LED DRIVERS (AND ASSOC. FIXTS.) SHALL HAVE MANUFACTURER'S CERTIFICATION OF COMPLIANCE WITH CALIFORNIA ENERGY COMMISSION STANDARDS AND REQUIREMENTS, WHERE SUCH ARE USED IN CONDITIONED SPACES.
4. EXIT SIGNS , EMERGENCY LIGHTS AND LIGHT FIXTURES WITH EMERGENCY BATTERY BACK-UP SHALL SUPPLY A MINIMUM DURATION OF 90 MINUTES OF POWER IN THE EVENT OF A POWER OUTAGE/FAILURE.

TYPE	DESCRIPTION	LAMPS	MANUFACTURER
C	6" DIA. LED RECESSED DOWNLIGHT FIXTURE, GALVANIZED STEEL HOUSING, 6" PARABOLIC REFLECTOR, SEMI-SPECULAR CLEAR FINISH, 60° DOWN, 0-10V DIMMING DRIVER, 277V.	18W LED 90 CRI 1500 LUMENS	HALO LIGHTING HOUSING: PD6 LED MODULE: PDM6A
CE	SAME AS FIXTURE TYPE "C" EXCEPT WITH ADDITIONAL EMERGENCY BATTERY BACK-UP.	18W LED 90 CRI 1500 LUMENS	HALO LIGHTING HOUSING: PD6 LED MODULE: PDM6A
E	LED EXIT LIGHT, GREEN LETTERS THERMOPLASTIC HOUSING WITH EMERGENCY BATTERY BACK-UP SPECTRON SELF-TESTING ELECTRONIC, SEE PLANS FOR NUMBER OF FACES, ARROWS AND MOUNTING REQUIRED, 277V.	INCLUDED	DUAL LITE LE SERIES
EM	DOUBLE HEAD INDOOR LED EMERGENCY LIGHT FIXTURE, THERMOPLASTIC HOUSING, ADJUSTABLE HEAD LAMPS, NICKEL METAL HYDRIDE BATTERY, WITH SPECTRON SELF-DIAGNOSTICS, FINISH AND COLOR PER ARCHITECT, 120/277V.	FURN. WITH FIXTURE	DUAL-LITE EV SERIES .

ELECTRICAL SYMBOLS & ABBREVIATIONS

SYMBOLS & ABBREVIATIONS SHOWN ARE FOR GENERAL USE. DISREGARD THOSE WHICH DO NOT APPEAR ON THE PLANS.

- FLUORESCENT OR LED LUMINAIRE - SEE SCHEDULE
- EMERGENCY OR NIGHT LIGHT
- RECESSED LINEAR LED LUMINAIRE - SEE SCHEDULE
- LUMINAIRE - RECESSED - SEE SCHEDULE
- RECESSED WALL WASHER
- LUMINAIRE - SURFACE MOUNTED - SEE SCHEDULE
- LUMINAIRE - POLE OR POST MOUNTED - SEE SCHEDULE
- LUMINAIRE - WALL MOUNTED SEE SCHEDULE
- BOLLARD - SEE SCHEDULE
- PATH LIGHT - SEE SCHEDULE
- EXIT LIGHT - DIRECTIONAL ARROWS AS INDICATED - SEE SCHEDULE
- TRACK LIGHTING - SEE SCHEDULE
- EMERGENCY LIGHT
- DIGITAL DUAL TECHNOLOGY OCC. SENSOR
- LIGHTING CONTROL OCCUPANCY SENSOR CORNER MOUNTED
- DRC — DIMMER ROOM CONTROLLER
- PC — PLUG LOAD CONTROLLER
- RC — ROOM LIGHTING CONTROLLER
- LCP — LIGHTING CONTROL PANEL
- DL — DIGITAL DAYLIGHT SENSOR
- $ — SINGLE POLE SWITCH **
- $a — SINGLE POLE SWITCH, ** a = CIRCUIT CONTROLLED
- $3 — THREE WAY SWITCH**
- $4 — FOUR WAY SWITCH**
- $M — MANUAL MOTOR STARTER
- $K — KEY OPERATED SWITCH**
- LIGHTING DIMMER**
- DIGITAL ON/OFF SWITCH **
- $D — DIGITAL DIMMER SWITCH **
- $M# — DIGITAL MULTI SCENE LIGHTING SWITCH **
- $S — DIGITAL DUAL TECHNOLOGY WALL OCC. SENSOR **
- WALL OCCUPANCY SENSOR **
- DOUBLE SWITCHED WALL OCCUPANCY SENSOR **
- DIMMING DUAL TECHNOLOGY WALL SWITCH OCCUPANCY SENSOR **
- 2-BUTTON DIMMING DUAL TECHNOLOGY WALL SWITCH OCCUPANCY SENSOR **
- DC — SECURITY DOOR CONTACTS
- MD — SECURITY MOTION DETECTOR
- SC — CCTV CAMERA
- KP — SECURITY SYSTEM KEYPAD
- ADA PUSHBUTTON
- CH — DOOR CHIME WITH LED
- RECEPTACLE - DUPLEX *
- DUPLEX RECEPTACLE MOUNTED ABOVE COUNTER - FIELD VERIFY HEIGHT
- GFCI CONVENIENCE RECEPTACLE - DUPLEX*
- GFCI CONVENIENCE DUPLEX RECEPTACLE MOUNTED ABOVE COUNTER - FIELD VERIFY HEIGHT
- RECEPTACLE DOUBLE DUPLEX*
- HALF SWITCHED DUPLEX RECEPTACLE *
- SINGLE RECEPTACLE*
- DUPLEX RECEPTACLE - CEILING MOUNTED
- HC — LETTER INDICATES DUPLEX HALF CONTROLLED RECEPTACLE *
- C — LETTER INDICATES DUPLEX FULLY CONTROLLED RECEPTACLE *
- FLOOR MOUNTED DUPLEX RECEPTACLE
- FLOOR MOUNTED BOX
- POWER OUTLET - SEE PLANS FOR NEMA TYPE*
- POWER POLE
- WALL TELEPHONE OUTLET **
- [#] VOICE/DATA WALL OUTLET*
- [#] VOICE/DATA OUTLET MOUNTED ABOVE COUNTER - FIELD VERIFY HEIGHT
- [#] SURFACE MOUNTED VOICE/DATA WALL OUTLET *
- [#] SURFACE MOUNTED VOICE/DATA OUTLET MOUNTED ABOVE COUNTER - FIELD VERIFY HEIGHT
- WIRELESS ACCESS POINT (WAP) - CEILING MOUNTED
- WIRELESS ACCESS POINT (WAP) - WALL MOUNTED - FIELD VERIFY HEIGHT
- [#] VOICE/DATA OUTLET - FLOOR MOUNTED
- TV OUTLET*
- [#] VOICE/DATA OUTLET - CEILING MOUNTED
- S — INTERIOR SPEAKERS CEILING MOUNTED
- S — INTERIOR SPEAKERS WALL MOUNTED
- C — CLOCK +8'-0" AFF U.O.N. VERIFY BEFORE INSTALLATION
- PANELBOARD - FLUSH MOUNTED
- EQUIPMENT PANEL - FLUSH MOUNTED
- PANELBOARD - SURFACE MOUNTED
- EQUIPMENT PANEL - SURFACE MOUNTED
- M — METER W/ CURRENT TRANSFORMER
- J — JUNCTION BOX - CEILING OR WALL MOUNTED, SIZE PER CODE, TAPE AND TAG WIRES
- MOTOR CONNECTION
- NON-FUSED DISCONNECT SWITCH
- FUSED DISCONNECT SWITCH; FUSED WITH DUAL-ELEMENT FUSES SIZED PER EQUIPMENT MFGR'S NAMEPLATE DATA
- COMBINATION STARTER/FUSED DISCONNECT SWITCH; FUSED DISCONNECT SWITCH ELEMENT FUSES SIZED PER EQUIPMENT MFGRS NAMEPLATE DATA
- MAGNETIC STARTER - NEMA SIZE INDICATED NEMA 3R ENCLOSURE UNLESS OTHERWISE SPECIFIED
- CIRCUIT BREAKER
- GROUND ROD WITH GROUNDWELL BOX
- GROUND ELECTRODE
- NORMALLY OPEN CONTACT
- NORMALLY CLOSED CONTACT
- TRANSFORMER - SEE SINGLE LINE FOR SIZE
- PULLBOX
- FLEX CONDUIT WITH CONNECTION
- CONDUIT - UP
- CONDUIT - DOWN
- — E — CONDUIT EMERGENCY SYSTEM
- — LV — LOW VOLTAGE WIRING
- SURFACE METAL OR NON-METALLIC RACEWAY
- CONDUIT - CONCEALED IN WALLS OR CEILING
- CONDUIT - EXISTING
- CONDUIT - BELOW SLAB OR UNDERGROUND: 3/4"MIN.
- CAPPED OR STUB-OUT CONDUIT
- CONDUIT CONTINUATION
- #10 — CONDUIT - HOME RUN TO PANEL, TERMINAL CABINET, ETC. RUNS MARKED WITH CROSSHATCHES INDICATE NUMBER OF #12 AWG WIRES WHEN MORE THAN TWO. SIZE CONDUIT ACCORDING TO SPECIFICATIONS AND APPLICABLE CODE. CROSS HATCHES WITH NUMBER ADJACENT INDICATES WIRE SIZE OTHER THAN #12 AWG.
- 2 — SHEET NOTE REFERENCE SYMBOL; SEE ASSOCIATED NOTE ON SAME SHEET
- 3 — SCHEDULE SYMBOL; SEE ASSOCIATED NOTE ON SAME SHEET
- 2 — DETAIL NOTE REFERENCE SYMBOL SEE ASSOCIATED NOTE ON SAME DETAIL
- F301 — FEEDER DESIGNATION; SEE ASSOCIATED NOTE ON SAME DETAIL
- 1 / E3.0 — DETAIL NUMBER; DETAIL OR SECTION REFERENCE; SHEET NUMBER
- 1 / 2 — INDICATES QUANTITY OF TELEPHONE OUTLETS; INDICATES QUANTITY OF DATA OUTLETS

ABBREVIATIONS

A	AMPERE	GFCI	GROUND FAULT	OAH	OVERALL HEIGHT
AFF	ABOVE FINISHED FLOOR	GFI	INTERRUPTING	OC	ON CENTER
ALUM/AL	ALUMINUM	GND, G	GROUND	OH	OVERHEAD
ARCH	ARCHITECT	GRS	GALVANIZED RIGID STEEL	PA	PUBLIC ADDRESS
AWG	AMERICAN WIRE GAUGE	HT	HEIGHT	PB	PULL BOX
BKR	BREAKER	IC	INTERCOM	PF	POWER FACTOR
C	CONDUIT	IDF	INTERMEDIATE DISTRIBUTION FRAME	PH	PHASE
CATV	CABLE TV	INCAND	INCANDESCENT	PIR	PASSIVE INFRARED
CB	CIRCUIT BREAKER	JB	JUNCTION BOX	PNL	PANEL
CCTV	CLOSED CIRCUIT TV	KV	KILOVOLT	PV	PHOTOVOLTAIC
CKT	CIRCUIT	KVA	KILOVOLT AMPERES	PVC	POLYVINYL CHLORIDE
CL	CENTER LINE	KW	KILOWATT	PWR	POWER
CLG	CEILING	LCP	LIGHTING CONTROL PANEL	(R)	RELOCATED
CO	CONDUIT ONLY	LTG	LIGHTING	(RP)	REMOVABLE POLE
CTR	CENTER	LV	LOW VOLTAGE	RECPT'S	RECEPTACLES
D	DIMMER	KCM	THOUSAND CIRCULAR MILS	REQD	REQUIRED
DIM	DIMENSION	MCA	MINIMUM CIRCUIT AMPS	REQMT'S	REQUIREMENT(S)
DIST	DISTRIBUTION	MDF	MAIN DISTRIBUTION FRAME	SHT	SHEET
(E)	EXISTING	MECH	MECHANICAL	SLD	SINGLE LINE DIAGRAM
EC	ELECTRICAL CONTRACTOR	MH	METAL HALIDE	STC	SYSTEMS TERMINATION CABINET
(EL)	EVENING LIGHT	MLO	MAIN LUGS ONLY	SW	SWITCH
EM	EMERGENCY	MPOE	MAIN POINT OF ENTRANCE	SWBD	SWITCHBOARD
EMT	ELECTRICAL METALLIC TUBING	MTD	MOUNTED	TTB	TELEPHONE TERMINAL BACKBOARD
EQUIP	EQUIPMENT	MTG	MOUNTING	TYP	TYPICAL
FA	FIRE ALARM	MOCP	MAXIMUM OVER CURRENT PROTECTION	UON	UNLESS OTHERWISE NOTED
FACP	FIRE ALARM CONTROL PANEL	(N)	NEW	UG	UNDERGROUND
FC	FOOT CANDLE	NIC	NOT IN CONTRACT	V	VOLT
FIN	FINISH	NIEC	NOT IN ELECTRICAL CONTRACT	W	WATT
FL	FLOOR	(NL)	NIGHT LIGHT	W/	WITH
FLA	FULL LOAD AMPS	NO.	NUMBER	WP	WEATHERPROOF
FLUOR	FLUORESCENT	NOM	NOMINAL	XFMR	TRANSFORMER
(F)	FUTURE	NTS	NOT TO SCALE		
GC	GENERAL CONTRACTOR				

FIRE ALARM

NOTE: ALTERATIONS AND ADDITIONS TO EXISTING FIRE ALARM ARE DEFERRED SUBMITTAL. CONTRACTOR SHALL SUBMIT COMPLETE FIRE ALARM DESIGN PLANS AND CALCULATIONS PRIOR TO INSTALLATION.

- P — MANUAL PULL STATION
- STROBE ONLY
- HORN ONLY
- M — MINI HORN
- HORN/STROBE
- CHIME/STROBE
- HEAT DETECTOR
- SMOKE DETECTOR
- DUCT SMOKE DETECTOR
- TAMPER SWITCH
- FLOW SWITCH
- POST INDICATING VALVE
- FIRE SMOKE DAMPER
- BELL (GONG)
- FCP — FIRE ALARM CONTROL PANEL
- APS — AUXILIARY POWER SUPPLY
- FSA — FIRE SYSTEM ANNUNCIATOR
- FTR — FIRE ALARM TRANSPONDER OR TRANSMITTER
- ESR — ELEVATOR STATUS/RECALL
- FAC — FIRE ALARM COMMUNICATOR
- ANN — REMOTE ANNUNCIATORS
- EOL — END OF LINE

* +15" A.F.F. TO BOTTOM OF BOX, U.O.N.
** +48" A.F.F. TO TOP OF BOX, U.O.N.
[#] NUMBER IN BRACKETS DENOTES NUMBER OF CABLE DROPS WHEN MORE THAN (2).

LIGHT FIXTURE SCHEDULE (CONT.)

TYPE	DESCRIPTION	LAMPS	MANUFACTURER
M	13 ½" HEIGHT SMALL CYLINDRICAL LED PENDANT FIXTURE, FINISH AND COLOR TO MATCH EXISTING, 0-10 DIMMING DRIVER, 277V. FIELD VERIFY CABLE LENGTH.	10W LED 3000°K	THE AMERICAN GLASS LIGHT COMPANY SCARAB II
T16	3 ½" APERTURE, 16 FOOT LONG SUSPENDED BIDIRECTIONAL LED LIGHT FIXTURE, EXTRUDED ALUMINUM HOUSING, SINGLE CIRCUIT, FROSTED FLUSH SHIELDING, AIR CRAFT, 0-10V DIMMING DRIVER, 277V.	6.38W/FT LED 724 LUM/FT	NULITE RP4 LED SERIES
T40	SAME AS FIXTURE TYPE "T16" EXCEPT 40' LONG AND WATTAGE/LUMEN OUTPUT.	4.85W/FT LED 568 LUM/FT	NULITE RP4 LED SERIES
U	1"H x 33 ¼" LONG LED UNDERCABINET LIGHT FIXTURE, HEAVY GAUGE ALUMINUM HOUSING, POLYCARBONATE DIFFUSER, LINEAR PRISMS, 0-10V DIMMING DRIVER, FINISH PER ARCHITECT, 277V.	15W LED 3000°K 1,350 LUMENS	ELCO LIGHTING ZINNIA LED SERIES
XA	16"W x 8"H x 8"DEEP, WALL MOUNTED ENTRI ROUND REVEALS LED LIGHT FIXTURE, ONE-PIECE DIE CAST ALUMINUM HOUSING, IMPACT RESISTANT LENS, TEMPERED FROSTED GLASS SEALED TO HOUSING, (1) 21 LED LIGHTBAR, TYPE III DISTRIBUTION, COLOR TO MATCH EXISTING, ELECTRONIC DRIVER, 277V.	25W LED 3000°K 2,738 LUMENS	EATON INVUE SERIES
XAE	SAME AS FIXTURE TYPE "XA" EXCEPT WITH AN ADDITIONAL EMERGENCY BATTERY PACK WITH BACK BOX, 277V.	25W LED 3000°K 2,738 LUMENS	EATON INVUE SERIES

APPLICABLE CODES & STANDARDS

CODES:

1. 2016 CALIFORNIA ADMINISTRATIVE CODE C.C.R., TITLE 24, PART 1.
2. 2016 CALIFORNIA BUILDING CODE (CBC) C.C.R., TITLE 24, VOL. 1 & 2 BASED ON THE 2015 INTERNATIONAL BUILDING CODE (IBC) WITH CALIFORNIA AMENDMENTS.
3. 2016 CALIFORNIA ELECTRICAL CODE (CEC) C.C.R., TITLE 24, PART 3 BASED ON THE 2014 NATIONAL ELECTRICAL CODE (NEC) WITH CALIFORNIA AMENDMENTS.
4. 2016 CALIFORNIA MECHANICAL CODE (CMC) C.C.R., TITLE 24, PART 4 BASED ON THE 2015 UNIFORM MECHANICAL CODE (UMC) WITH CALIFORNIA AMENDMENTS.
5. 2016 CALIFORNIA PLUMBING CODE (CPC) C.C.R., TITLE 24, PART 5 BASED ON THE 2015 UNIFORM PLUMBING CODE (UPC) WITH CALIFORNIA AMENDMENTS.
6. 2016 CALIFORNIA ENERGY CODE C.C.R., TITLE 24, PART 6.
7. 2016 CALIFORNIA FIRE CODE (CFC) C.C.R., TITLE 24, PART 9 BASED ON THE 2015 INTERNATIONAL FIRE CODE (IFC) WITH CALIFORNIA AMENDMENTS.
8. 2016 CALIFORNIA GREEN BUILDING STANDARDS CODE C.C.R., TITLE 24, PART 11.
9. 2016 CALIFORNIA REFERENCED STANDARDS CODE C.C.R., TITLE 24, PART 12.
10. TITLE 19 C.C.R., PUBLIC SAFETY, STATE FIRE MARSHAL REGULATIONS.
11. NATIONAL FIRE ALARM CODE (NFPA 72) 2016.
12. CITY OF MORGAN HILL ORDINANCES, CODES, AND REGULATIONS.

STANDARDS:

1. AMERICAN NATIONAL STANDARDS INSTITUTE (ANSI)
2. ELECTRONICS INDUSTRIES ASSOCIATION (EIA)
3. INSTITUTE OF ELECTRICAL AND ELECTRONIC ENGINEERS (IEEE)
4. NATIONAL ELECTRICAL MANUFACTURERS ASSOCIATION (NEMA)
5. NATIONAL ELECTRICAL TESTING ASSOCIATION (NETA)
6. UNDERWRITER LABORATORIES (UL)
7. CALIFORNIA OCCUPATIONAL SAFETY AND HEALTH ACT STANDARDS (CAL/OSHA)

SHEET INDEX

E0.1 SYMBOLS, ABBREVIATIONS, LIGHT FIXTURE SCHEDULE, CODES, STANDARDS, NOTES & SHEET INDEX.
E0.2 CALIFORNIA ENERGY COMPLIANCE TITLE 24 (BUILDING INTERIOR).
E0.3 CALIFORNIA ENERGY COMPLIANCE TITLE 24 (BUILDING EXTERIOR).
E0.4 CALIFORNIA ENERGY COMPLIANCE TITLE 24 (SOLAR READY AREAS) ⚠1
E0.5 CALIFORNIA ENERGY COMPLIANCE TITLE 24 (ELECTRICAL POWER DISTRIBUTION)
E1.1 ELECTRICAL SINGLE LINE DIAGRAM & PANELBOARD SCHEDULES.
E3.1 ELECTRICAL DEMOLITION PLAN.
E4.1 POWER & SYSTEMS PLAN - PARTIAL BUILDING.
E4.2 POWER & SYSTEMS PLAN - NORTH EAST.
E4.3 POWER & SYSTEMS PLAN - ROOF.
E5.1 LIGHTING PLAN - NORTH EAST.
E6.1 ELECTRICAL DETAILS.
E6.2 ELECTRICAL DETAILS.

JOB COPY
These plans must be kept on the job at all times.
CITY OF MORGAN HILL
BUILDING DIVISION

WESTON MILES
ARCHITECTS
17500 Depot Street, Suite #200
Morgan Hill, CA 95037
1 • 408 • 779 • 6686
• Architecture • Landscape •

LICENSED ARCHITECT CHARLES D. WESTON No. C 18,552 RENEWAL 08-31-19 STATE OF CALIFORNIA
NOT VALID WITHOUT SIGNATURE

AURUM CONSULTING ENGINEERS MONTEREY BAY, INC.
Project No. 16163.01
60 Garden Court • Suite 210 • Monterey, CA 93940
T.831.646.3330 • F.831.646.3336 • www.acemb.com

These drawings are instruments of service and are the property of AURUM CONSULTING ENGINEERS MONTEREY BAY, INC. All designs and other information in the drawings are for use on the specified project and shall not be used otherwise without the expressed written permission of AURUM CONSULTING ENGINEERS MONTEREY BAY, INC.

REGISTERED PROFESSIONAL ENGINEER ELECTRICAL STATE OF CALIFORNIA

REVISIONS
1 03/28/2019 PLAN REVIEW #2
2
3

SYMBOLS, ABBRE., LIGHT FIXTURE SCHEDULE, CODES, STANDARDS, NOTES & SHEET INDEX

MORGAN HILL LIBRARY ADDITION

CITY OF MORGAN HILL
660 W MAIN AVE, MORGAN HILL, CA 95037

These drawings are instruments of service and are the property of WESTON MILES ARCHITECTS, INC. All designs and other information on the drawings are for use on the specified project and shall not be used otherwise without the expressed written permission of WESTON MILES ARCHITECTS, INC.

Written dimensions on these drawings shall have precedence over scaled dimensions. Contractors shall verify and be responsible for all dimensions and conditions on the job and this office shall be notified of any variations from the dimensions and conditions shown by these drawings. Shop details shall be submitted to this office for approval before proceeding with fabrication.

© Copyrighted 2019

DATE: 02/8/2019
JOB NO: 15058

E0.1

STATE OF CALIFORNIA
INDOOR LIGHTING
CEC-NRCC-LTI-01-E (Revised 06/18) — CALIFORNIA ENERGY COMMISSION

CERTIFICATE OF COMPLIANCE — NRCC-LTI-01-E
Indoor Lighting — (Page 1 of 6)
Project Name: Morgan Hill Library Expansion — Date Prepared: 2/6/2019

A. General Information

Climate Zone: 4	Conditioned Floor Area: 2,632 Unconditioned Floor Area: 0						
Building Type:	☑	Nonresidential	☐	High-Rise Residential	☐	Hotel/Motel	
☐ Schools	☐	Relocatable Public Schools	☑	Conditioned Spaces	☐	Unconditioned Spaces	
Phase of Construction:	☐	New Construction	☐	Addition	☑	Alteration	
Method of Compliance:	☐	Complete Building	☑	Area Category	☐	Tailored	

Project Address: 660 W. Main Ave

B. Lighting Compliance Documents (select yes for each document included)

For detailed instructions on the use of this and all Energy Efficiency Standards compliance documents, refer to the Nonresidential Manual published by the California Energy Commission.

YES	NO	COMP. DOC.	TITLE
☑	☐	NRCC-LTI-01-E	Certificate of Compliance. All Pages required en plane for all submittals.
☑	☐	NRCC-LTI-02-E	Lighting Controls, Certificate of Compliance, and PAF Calculation. All Pages required on plans for all submittals.
☑	☐	NRCC-LTI-03-E	Indoor Lighting Power Allowance
☐	☑	NRCC-LTI-04-E	Tailored Method Worksheets
☐	☑	NRCC-LTI-05-E	Line Voltage Track Lighting Worksheets
☐	☐	NRCC-LTI-06-E	Indoor Lighting Existing Conditions

STATE OF CALIFORNIA
INDOOR LIGHTING
CEC-NRCC-LTI-01-E (Revised 06/18) — CALIFORNIA ENERGY COMMISSION

CERTIFICATE OF COMPLIANCE — NRCC-LTI-01-E
Indoor Lighting — (Page 2 of 6)
Project Name: Morgan Hill Library Expansion — Date Prepared: 2/6/2019

C. Summary of Allowed Lighting Power

Conditioned and Unconditioned space Lighting must not be combined for compliance

	Indoor Lighting Power for Conditioned Spaces		Watts	Indoor Lighting Power for Unconditioned Spaces		Watts
01	**Installed** Lighting NRCC-LTI-01-E, Table H, page 5	+	972	**Installed** Lighting NRCC-LTI-01-E, Table H, page 5	+	0
02	Portable Only for Offices NRCC-LTI-01-E, Table G, page 4	+				
03	Minus Lighting Control Credits NRCC-LTI-02-E, page 2	-	0	Minus Lighting Control Credits NRCC-LTI-02-E, page 2	-	0
04	Adjusted **Installed** Lighting Power (row 1 plus row 2 minus row 3)	=	972	Adjusted **Installed** Lighting Power (row 1 minus row 3)	=	0
	Complies ONLY if **Installed** ≤ **Allowed** (Box 04 < Box 05)			Complies ONLY if **Installed** ≤ **Allowed** (Box 04 < Box 05)		
05	**Allowed** Lighting Power Conditioned NRCC-LTI-03-E, page 1 Alterations with replacement luminaires that have at least 50/35% lower power compared to the original existing luminaires, may instead use the allowed wattage from NRCC-LTI-05, page 2		2,780	**Allowed** Lighting Power Unconditioned NRCC-LTI-03-E, page 1 Alterations with replacement luminaires that have at least 50/35% lower power compared to the original existing luminaires, may instead use the allowed wattage from NRCC-LTI-05, page 2		0

D. Declaration of Required Certificates of Installation

Declare by selecting yes for all of the Certificates that will be submitted. (Retain copies and verify forms are completed and signed.)

YES	NO	Compliance Document/Title	
☑	☐	NRCI-LTI-01-E - Must be submitted for all buildings	☐ Field Inspector
☑	☐	NRCI-LTI-02-E - Must be submitted for a lighting control system, or for an Energy Management Control System (EMCS), to be recognized for compliance.	☐ Field Inspector
☐	☑	NRCI-LTI-03-E - Must be submitted for a line-voltage track lighting integral current limiter, or for a supplementary overcurrent protection panel used to energize only line-voltage track lighting, to be recognized for compliance.	☐ Field Inspector
☐	☑	NRCI-LTI-04-E - Must be submitted for two interlocked systems serving an auditorium, a convention center, a conference room, a multipurpose room, or a theater to be recognized for compliance.	☐ Field Inspector
☐	☑	NRCI-LTI-05-E - Must be submitted for a Power Adjustment Factor (PAF) to be recognized for compliance.	☐ Field Inspector
☐	☑	NRCI-LTI-06-E - Must be submitted for additional wattage installed in a video conferencing studio to be recognized for compliance.	☐ Field Inspector

STATE OF CALIFORNIA
INDOOR LIGHTING
CEC-NRCC-LTI-01-E (Revised 06/18) — CALIFORNIA ENERGY COMMISSION

CERTIFICATE OF COMPLIANCE — NRCC-LTI-01-E
Indoor Lighting — (Page 3 of 6)
Project Name: Morgan Hill Library Expansion — Date Prepared: 2/6/2019

E. Declaration of Required Certificates of Acceptance

Declare by selecting yes for all of the Certificates that will be submitted. (Retain copies and verify forms are completed and signed.)

YES	NO	Compliance Document/Title	
☑	☐	NRCA-LTI-02-A - Must be submitted for occupancy sensors and automatic time switch controls.	☐ Field Inspector
☐	☑	NRCA-LTI-03-A - Must be submitted for automatic daylight controls.	☐ Field Inspector
☐	☑	NRCA-LTI-04-A - Must be submitted for demand responsive lighting controls.	☐ Field Inspector
☐	☑	NRCA-LTI-05-A - Must be submitted for institutional tuning power adjustment factor (PAF).	☐ Field Inspector

A Separate Lighting Schedule Must Be Filled Out for Conditioned and Unconditioned Spaces. Installed Lighting Power listed on this Lighting Schedule is only for:
☐ **CONDITIONED SPACE** ☐ **UNCONDITIONED SPACE**

F. Indoor Lighting Schedule and Field Inspection Energy Checklist

☐ The actual indoor lighting power listed on the next 2 pages includes all installed permanent and planned portable lighting systems.
☐ When Complete Building Method is used for compliance, list each different type of luminaire on separate lines.
☐ When Area Category Method or Tailored Method is used for compliance, list each different type of luminaire by each different function area on separate lines
☐ Also include track lighting in schedule, and submit the track lighting compliance document (NRCC-LTI-05-E) when line-voltage track lighting is installed.

STATE OF CALIFORNIA
INDOOR LIGHTING
CEC-NRCC-LTI-01-E (Revised 06/18) — CALIFORNIA ENERGY COMMISSION

CERTIFICATE OF COMPLIANCE — NRCC-LTI-01-E
Indoor Lighting — (Page 4 of 6)
Project Name: Morgan Hill Library Expansion — Date Prepared: 2/6/2019

G. Installed Portable Luminaires in Offices – Exception to Section 140.6(a)

☐ This section shall be filled out ONLY for portable luminaires in offices (As defined in §100.1). All other planned portable luminaires shall be documented on next page of this compliance document.
☐ This section is used to determine if greater than 0.3 watts of portable lighting is planned for any office
☐ Fill out a separate line for each different office. Small offices that are typical (having the same general and portable lighting) may be grouped together. This allowance shall not be traded between offices having different lighting systems.

Office Portable Luminaire Schedule	Office Installed Portable Luminaire W/ft²							Office Location	Field Inspector	
1	2	3	4	5	6	7	8	9	10	
Complete Luminaire Description (i.e., LED, under cabinet, furniture mounted direct/indirect)	Watts per Luminaire	Number of Luminaires	Installed portable luminaire watts in this office (W02 x W03)	Square Feet of this office	Watts per square foot (W04 / W05)	If W06 ≤ 0.3, enter zero If W06 > 0.3, (W06-0.3)	(W05 x W07)	Identify Office area in which these portable luminaires are installed	Pass	Fail
									☐	☐
									☐	☐
									☐	☐
									☐	☐
									☐	☐
									☐	☐
Total installed portable luminaire watts that are greater than 0.3 W/ft² per office:								Enter sum total of all pages into NRCC-LTI-01-E; Page 1		

STATE OF CALIFORNIA
INDOOR LIGHTING
CEC-NRCC-LTI-01-E (Revised 06/18) — CALIFORNIA ENERGY COMMISSION

CERTIFICATE OF COMPLIANCE — NRCC-LTI-01-E
Indoor Lighting — (Page 5 of 6)
Project Name: Morgan Hill Library Expansion — Date Prepared: 2/6/2019

A Separate Lighting Schedule Must Be Filled Out for Conditioned and Unconditioned Spaces. Installed Lighting Power listed on this Lighting Schedule is only for:
☑ **CONDITIONED SPACE** ☐ **UNCONDITIONED SPACE**

H. Indoor Lighting Schedule and Field Inspection Energy Checklist

Luminaire Schedule			Installed Watts						Location	Field Inspector [1]	
01	02	03	04		05	06		07	08		
Name or Item Tag	Complete Luminaire Description (i.e, 3 lamp fluorescent troffer, F32T8, one dimmable electronic ballast)	Watts per Luminaire	How wattage was determined: CEC Default from Table	According to §130.0(c)	Number Luminaires	Total Installed Watts (Watts per Lamp x Number Lamps)	Primary Function area in which these luminaires are installed		Pass	Fail
C	16w Recessed Downlight LED	16.0	☐	☑	7	112	Corridor/Restroom/Support		☐	☐
CE	16w Recessed Downlight LED	16.0	☐	☑	3	48	Classroom, Lecture, Training		☐	☐
M	10w Pendant LED	10.0	☐	☑	6	60	Classroom, Lecture, Training		☐	☐
M	10w Pendant LED	10.0	☐	☑	3	30	Lounge, Recreation		☐	☐
T16	102w Suspended LED	102.0	☐	☑	2	204	Lounge, Recreation		☐	☐
T40	194w Suspended LED	194.0	☐	☑	2	388	Classroom, Lecture, Training		☐	☐
U	15w Undercabinet LED	15.0	☐	☑	2	30	Classroom, Lecture, Training		☐	☐
			☐	☐					☐	☐
			☐	☐					☐	☐
		INSTALLED WATTS PAGE TOTAL:				872	Enter sum total of all pages into NRCC-LTI-01-E; Page 2			

STATE OF CALIFORNIA
INDOOR LIGHTING
CEC-NRCC-LTI-01-E (Revised 06/18) — CALIFORNIA ENERGY COMMISSION

CERTIFICATE OF COMPLIANCE — NRCC-LTI-01-E
Indoor Lighting — (Page 6 of 6)
Project Name: Morgan Hill Library Expansion — Date Prepared: 2/6/2019

DOCUMENTATION AUTHOR'S DECLARATION STATEMENT
1. I certify that this Certificate of Compliance documentation is accurate and complete.

Documentation Author Name:	J. Elias Cosio	Documentation Author Signature:	
Company:	Aurum Consulting Engineers	Signature Date:	2/6/2019
Address:	60 Garden Ct, Suite 210	CEA Certificate Identification (if applicable):	
City/State/Zip:	Monterey, CA 93940	Phone:	831-646-3330

RESPONSIBLE PERSON'S DECLARATION STATEMENT
I certify the following under penalty of perjury, under the laws of the State of California:
1. The information provided on this Certificate of Compliance is true and correct.
2. I am eligible under Division 3 of the Business and Professions Code to accept responsibility for the building design or system design identified on this Certificate of Compliance (responsible designer).
3. The energy features and performance specifications, materials, components, and manufactured devices for the building design or system design identified on this Certificate of Compliance conform to the requirements of Title 24, Part 1 and Part 6 of the California Code of Regulations.
4. The building design features or system design features identified on this Certificate of Compliance are consistent with the information provided on other applicable compliance documents, worksheets, calculations, plans and specifications submitted to the enforcement agency for approval with this building permit application.
5. I will ensure that a completed signed copy of this Certificate of Compliance shall be made available with the building permit(s) issued for the building, and made available to the enforcement agency for all applicable inspections. I understand that a completed signed copy of this Certificate of Compliance is required to be included with the documentation the builder provides to the building owner at occupancy.

Responsible Designer Name:	Jhim Handrex Meza	Responsible Designer Signature:	
Company:	Aurum Consulting Engineers	Date Signed:	
Address:	60 Garden Ct, Suite 210	License:	E21989
City/State/Zip:	Monterey, CA 93940	Phone:	831-646-3330

STATE OF CALIFORNIA
INDOOR LIGHTING – LIGHTING CONTROLS
CEC-NRCC-LTI-02-E (Revised 06/18) — CALIFORNIA ENERGY COMMISSION

CERTIFICATE OF COMPLIANCE — NRCC-LTI-02-E
Indoor Lighting - Lighting Controls — (Page 1 of 3)
Project Name: Morgan Hill Library Expansion — Date Prepared: 2/6/2019

A. Mandatory Lighting Control Declaration Statements (indicate if the measure applies by checking yes or no below.)

YES	NO	Control Requirements
☑	☐	Lighting shall be controlled by self-contained lighting control devices which are certified to the Energy Commission according to the Title 20 Appliance Efficiency Regulations in accordance with Section 110.9.
☑	☐	Lighting shall be controlled by a lighting control system or energy management control system in accordance with §110.9. An Installation Certificate shall be submitted in accordance with Section 130.4(q).
☐	☑	One or more Track Lighting Integral Current Limiters shall be installed which have been certified to the Energy Commission in accordance with §110.9 and §130.0. Additionally, an Installation Certificate shall be submitted in accordance with Section 130.4(b).
☐	☑	A Track Lighting Supplementary Overcurrent Protection Panel shall be installed in accordance with Section 130.9 and Section 130.0. Additionally, an Installation Certificate shall be installed in accordance with Section 130.4(b).
☐	☑	All lighting controls and equipment shall comply with the applicable requirements in §110.9 and shall be installed in accordance with the manufacturer's instructions in accordance with Section 130.1.
☐	☑	All luminaires shall be functionally controlled with manually switched ON and OFF lighting controls in accordance with Section 130.1(a).
☐	☐	General lighting shall be separately controlled from all other lighting systems in an area. Floor and wall display, window display, case display, ornamental, and special effects lighting shall each be separately controlled on circuits that are 20 amps or less. When track lighting is used, general, display, ornamental, and special effects lighting shall each be separately controlled; in accordance with Section 130.1(a).
☑	☐	The general lighting of any enclosed area 100 square feet or larger, with a connected lighting load that exceeds 0.5 watts per square foot shall meet the multi-level lighting control requirements in accordance with Section 130.1(b).
☑	☐	All installed indoor lighting shall be equipped with controls that meet the applicable Shut-OFF control requirements in Section 130.1(c).
☐	☑	Lighting in all Daylit Zones shall be controlled in accordance with the requirements in Section 130.1(d) and daylit zones are shown on the plans.
☐	☑	Lighting power in buildings larger than 10,000 square feet shall be capable of being automatically reduced in response to a Demand Responsive Signal in accordance with Section 130.1(e).
☑	☐	Before an occupancy permit is granted for a newly constructed building or area, or a new lighting system serving a building, area, or site is operated for normal use, indoor lighting controls serving the building, area, or site shall be certified as meeting the Acceptance Requirements for Code Compliance in accordance with Section 130.4.(a). The controls required to meet the Acceptance Requirements include automatic daylight controls, automatic shut-OFF controls, and demand responsive controls.

STATE OF CALIFORNIA
INDOOR LIGHTING – LIGHTING CONTROLS
CEC-NRCC-LTI-02-E (Revised 06/18) — CALIFORNIA ENERGY COMMISSION

CERTIFICATE OF COMPLIANCE — NRCC-LTI-02-E
Indoor Lighting - Lighting Controls — (Page 2 of 3)
Project Name: Morgan Hill Library Expansion — Date Prepared: 2/6/2019

A separate document must be filled out for Conditioned and Unconditioned Spaces. This page is used only for the following:
☑ CONDITIONED SPACES ☐ UNCONDITIONED SPACES

B. Mandatory and Prescriptive Indoor Lighting Control Schedule, PAF Calculation, and Field Inspection Checklist

Lighting Control Schedule			Standards Complying With [1] (✓ all that apply, or enter "E" if Exempted)									PAF Credit Calculation [2]: Watts of Controlled Lighting	PAF	Control Credit (K x L)	✓ if Acceptance Test Required	Field Inspector	
01	02	03	04	05	06	07	08	09	10	11	12	13	14	15			
Location in Building	Type/Description of Lighting Control (i.e.: occupancy sensor, automatic time switch, dimmer, automatic daylight, etc...)	# of Units	§130.1(a)	§110.9(b)	§130.1(c)	§130.1(d)	§130.1(e)	§140.6(a)2	§140.6(d)					Pass	Fail		
Small Entrance Area	Multi Level	1	☐	☑	☐	☐	☐	☐	☐				✓	☐	☐		
			☐	☐	☐	☐	☐	☐	☐			

STATE OF CALIFORNIA
OUTDOOR LIGHTING
CEC-NRCC-LTO-01-E (Revised 04/16) CALIFORNIA ENERGY COMMISSION

CERTIFICATE OF COMPLIANCE	NRCC-LTO-01-E
Outdoor Lighting	(Page 1 of 4)
Project Name: Morgan Hill Library Expansion	Date Prepared:

A. General Information

Project Address: 660 W. Main Ave Morgan Hill, CA 95037			Total Illuminated Hardscape Area: 440	
Phase of Construction:	☐ New Construction	☐ Addition	☑ Alteration	
Outdoor Lighting Zone (LZ)	☐ LZ-1	☐ LZ-2	☑ LZ-3	☐ LZ-4
I have confirmed with the AHJ which LZ applies to this site. For default lighting zone designations, see Title 24 Part 6, §10-114				

B. Lighting Compliance Documents (check box for each document included)

For detailed instructions on the use of this and all Energy Efficiency Standards compliance documents, refer to the Nonresidential Manual published by the California Energy Commission.

☑	NRCC-LTO-01-E	Certificate of Compliance
☑	NRCC-LTO-02-E	Outdoor Lighting Controls Certificate of Compliance
☑	NRCC-LTO-03-E	Outdoor Lighting Power Allowance Certificate of Compliance
☐	NRCC-LTO-04-E	Outdoor Lighting Existing Conditions Certificate of Compliance

C. Summary of Allowed Outdoor Lighting Power		Watts
01	Sum Total ALLOWED Outdoor Lighting Wattage from NRCC-LTO-03-E, page 1 Alterations with NO increase of connected lighting load may instead use the allowed wattage from NRCC-LTO-04, page 2.	654
	Complies ONLY if Installed (Box 02) ≤ Allowed (Box 01)	
02	Sum Total INSTALLED Outdoor Lighting Wattage from NRCC-LTO-01-E, page 3.	150

D. Declaration of Required Installation Certificates
Declare by checking all Installation Certificates that will be submitted. (Retain copies and verify compliance documents are completed and signed.)

☑ NRCI-LTO-01-E - Must be submitted for all buildings	☐ Field Inspector
☑ NRCI-LTO-02-E - Must be submitted for a lighting control system, or for an Energy Management Control System (EMCS), to be recognized for compliance.	☐ Field Inspector

E. Declaration of Required Certificates of Acceptance
Declare by checking all of the Certificates of Acceptance that will be submitted. (Retain copies and verify compliance documents are completed and signed.)

☑ NRCA-LTO-02-A - Must be submitted for outdoor lighting controls.	☐ Field Inspector

F. Schedule of Luminaires Exempt from the Outdoor Lighting Power Requirements in §140.7

01	02
Name or Symbol	Description of exempt luminaire in accordance with the exemptions

STATE OF CALIFORNIA
OUTDOOR LIGHTING
CEC-NRCC-LTO-01-E (Revised 04/16) CALIFORNIA ENERGY COMMISSION

CERTIFICATE OF COMPLIANCE	NRCC-LTO-01-E
Outdoor Lighting	(Page 2 of 4)
Project Name: Morgan Hill Library Expansion	Date Prepared: 2/6/2019

G. Schedule of Luminaires Exempt from the Cutoff Requirements in §130.2(b)

01	02
Name or Symbol	Description of exempt luminaire in accordance with the exemptions

H. Schedule of Luminaires Exempt from the Outdoor Lighting Control Requirements in §130.2(c)

01	02
Name or Symbol	Description of exempt luminaire in accordance with the exemptions

STATE OF CALIFORNIA
OUTDOOR LIGHTING
CEC-NRCC-LTO-01-E (Revised 02/16) CALIFORNIA ENERGY COMMISSION

CERTIFICATE OF COMPLIANCE	NRCC-LTO-01-E
Outdoor Lighting	(Page 3 of 4)
Project Name: Morgan Hill Library Expansion	Date Prepared: 2/6/2019

I. Outdoor Lighting Schedule and Field Inspection Energy Checklist

Luminaire Schedule		Installed Watts					Location	Cutoff	Field Inspector	
01	02	03	04		05	06	07	08	09	
			How wattage was determined							
Name or Item Tag	Complete Luminaire Description	Watts per Luminaire	CEC Default from NA8	According to §130.0(c)	Number of Luminaires	Total Installed Watts in this area (3 x 5)	Primary Function area in which the Luminaires are Installed (Outdoor Lighting Zone)	BUG Rating	Pass	Fail
XA	25w Wall Mounted LED	25.0	☐	☑	4	100	Pedestrian Hardscape	UH: n/a UL: n/a FVH: n/a BVH: n/a FH: n/a BH: n/a	☐	☐
XAE	25w Wall Mounted LED	25.0	☐	☑	2	50	Other Entrance/Exit	UH: n/a UL: n/a FVH: n/a BVH: n/a FH: n/a BH: n/a	☐	☐
			☐	☐				UH: UL: FVH: BVH: FH: BH:	☐	☐
					INSTALLED WATTS PAGE TOTAL:	150	Enter sum total of all pages (**Sum Total INSTALLED** Outdoor lighting wattage) into NRCC-LTO-01-E, page 1.		150	

STATE OF CALIFORNIA
OUTDOOR LIGHTING
CEC-NRCC-LTO-01-E (Revised 02/16) CALIFORNIA ENERGY COMMISSION

CERTIFICATE OF COMPLIANCE	NRCC-LTO-01-E
Outdoor Lighting	(Page 4 of 4)
Project Name: Morgan Hill Library Expansion	Date Prepared: 2/6/2019

DOCUMENTATION AUTHOR'S DECLARATION STATEMENT

1. I certify that this Certificate of Compliance documentation is accurate and complete.

Documentation Author Name: J. Elias Cosio	Documentation Author Signature:
Company: Aurum Consulting Engineers	Signature Date: 2/6/2019
Address: 60 Garden Ct, Suite 210	CEA Certification Identification (if applicable):
City/State/Zip: Monterey, CA 93940	Phone: 831-646-3330

RESPONSIBLE PERSON'S DECLARATION STATEMENT

I certify the following under penalty of perjury, under the laws of the State of California:
1. The information provided on this Certificate of Compliance is true and correct.
2. I am eligible under Division 3 of the Business and Professions Code to accept responsibility for the building design or system design identified on this Certificate of Compliance (responsible designer).
3. The energy features and performance specifications, materials, components, and manufactured devices for the building design or system design identified on this Certificate of Compliance conform to the requirements of Title 24, Part 1 and Part 6 of the California Code of Regulations.
4. The building design features or system design features identified on this Certificate of Compliance are consistent with the information provided on other applicable compliance documents, worksheets, calculations, plans and specifications submitted to the enforcement agency for approval with this building permit application.
5. I will ensure that a completed signed copy of this Certificate of Compliance shall be made available with the building permit(s) issued for the building, and made available to the enforcement agency for all applicable inspections. I understand that a completed signed copy of this Certificate of Compliance is required to be included with the documentation the builder provides to the building owner at occupancy.

Responsible Designer Name: Jhim Handrex Meza	Responsible Designer Signature:
Company: Aurum Consulting Engineers	Date Signed:
Address: 60 Garden Ct., Suite 210	License: E21989
City/State/Zip: Monterey, CA 93940	Phone: 831-646-3330

STATE OF CALIFORNIA
OUTDOOR LIGHTING CONTROLS
CEC-NRCC-LTO-02-E (Revised 08/16) CALIFORNIA ENERGY COMMISSION

CERTIFICATE OF COMPLIANCE	NRCC-LTO-02-E
Outdoor Lighting Controls	(Page 1 of 3)
Project Name: Morgan Hill Library Expansion	Date Prepared: 2/6/2019

A. Mandatory Outdoor Lighting Control Declaration Statements

Check all that apply:
- ☐ Lighting shall be controlled by self-contained lighting control devices which are certified to the Energy Commission according to the Title 20 Appliance Efficiency Regulations in accordance with §110.9(a).
- ☐ Lighting shall be controlled by a lighting control system or energy management control system in accordance with §110.9. An Installation Certificate shall be submitted in accordance with §130.4(b).
- ☑ All lighting controls and equipment shall comply with the applicable requirements in §110.9 and shall be installed in accordance with the manufacturer's instructions in accordance with §130.0(d).
- ☐ Part-Night Outdoor Lighting Controls, as defined in Section 100.1(b), shall meet the requirements in Section 110.9(b)5.
- ☐ All outdoor incandescent luminaires rated over 100 watts, determined in accordance with Section 130.0(c), shall be controlled by a motion sensor.
- ☐ All outdoor luminaires rated for use with lamps greater than 150 lamp watts, determined in accordance with Section 130.0(c), shall comply with Uplight and Glare requirements in accordance with Section 130.2(b).
- ☐ All installed outdoor lighting shall be controlled by a photocontrol or outdoor astronomical time-switch control, or other control capable of automatically switching OFF in accordance with Section 130.2(c)1.
- ☑ All installed outdoor lighting shall be independently controlled from other electrical loads by an automatic scheduling control in accordance with Section 130.2(c)2.
- ☐ All installed outdoor lighting, where the bottom of the luminaire is mounted 24 feet or less above the ground, shall be controlled with automatic lighting controls in accordance with Section 130.2(c)3.
- ☐ For Outdoor Sales Frontage, an automatic lighting control shall be installed in accordance with Section 130.2(c)4.
- ☐ For Building Facade, Ornamental Hardscape and Outdoor Dining lighting, an automatic lighting control shall be installed in accordance with Section 130.2(c)5.
- ☑ Before an occupancy permit is granted for the newly constructed building or for the addition, or for any altered outdoor lighting, the outdoor lighting controls shall be certified as meeting the Acceptance Requirements for Code Compliance in accordance with §130.4.(a). Outdoor lighting controls shall comply with the applicable requirements of Section 130.2(c) and Reference Nonresidential Appendix NA7.8.

STATE OF CALIFORNIA
OUTDOOR LIGHTING CONTROLS
CEC-NRCC-LTO-02-E (Revised 08/16) CALIFORNIA ENERGY COMMISSION

CERTIFICATE OF COMPLIANCE	NRCC-LTO-02-E
Outdoor Lighting Controls	(Page 2 of 3)
Project Name: Morgan Hill Library Expansion	Date Prepared: 2/6/2019

B. Mandatory Outdoor Lighting Control Schedule and Field Inspection Checklist

Outdoor Lighting Control Schedule			Standards Complying With (✓ all that apply, or enter 'E' if Exempted)						✓ if Acceptance Test Required	Field Inspector	
01	02	03	04	05	06	07	08	09	10	11	
Location and Application of Luminaires Being Controlled	Type/ Description of Lighting Control (i.e. outdoor motion sensor, outdoor photocontrol, outdoor astronomical time-switch control, automatic scheduling control, part-night outdoor lighting control)	# of Units	§130.2(a)	§130.2(c)1	§130.2(c)2	§130.2(c)3	§130.2(c)4	§130.2(c)5		Pass	Fail
									☐	☐	☐
									☐	☐	☐
									☐	☐	☐
									☐	☐	☐
									☐	☐	☐
									☐	☐	☐
									☐	☐	☐
									☐	☐	☐
									☐	☐	☐
									☐	☐	☐
									☐	☐	☐
									☐	☐	☐
									☐	☐	☐
									☐	☐	☐
									☐	☐	☐
									☐	☐	☐
									☐	☐	☐
									☐	☐	☐
									☐	☐	☐

STATE OF CALIFORNIA
OUTDOOR LIGHTING CONTROLS
CEC-NRCC-LTO-02-E (Revised 08/16) CALIFORNIA ENERGY COMMISSION

CERTIFICATE OF COMPLIANCE	NRCC-LTO-02-E
Outdoor Lighting Controls	(Page 3 of 3)
Project Name: Morgan Hill Library Expansion	Date Prepared: 2/6/2019

DOCUMENTATION AUTHOR'S DECLARATION STATEMENT

1. I certify that this Certificate of Compliance documentation is accurate and complete.

Documentation Author Name: J. Elias Cosio	Documentation Author Signature:
Company: Aurum Consulting Engineers	Signature Date: 2/6/2019
Address: 60 Garden Ct, Suite 210	CEA Certification Identification (if applicable):
City/State/Zip: Monterey, CA 93940	Phone: 831-646-3330

RESPONSIBLE PERSON'S DECLARATION STATEMENT

I certify the following under penalty of perjury, under the laws of the State of California:
1. The information provided on this Certificate of Compliance is true and correct.
2. I am eligible under Division 3 of the Business and Professions Code to accept responsibility for the building design or system design identified on this Certificate of Compliance (responsible designer).
3. The energy features and performance specifications, materials, components, and manufactured devices for the building design or system design identified on this Certificate of Compliance conform to the requirements of Title 24, Part 1 and Part 6 of the California Code of Regulations.
4. The building design features or system design features identified on this Certificate of Compliance are consistent with the information provided on other applicable compliance documents, worksheets, calculations, plans and specifications submitted to the enforcement agency for approval with this building permit application.
5. I will ensure that a completed signed copy of this Certificate of Compliance shall be made available with the building permit(s) issued for the building, and made available to the enforcement agency for all applicable inspections. I understand that a completed signed copy of this Certificate of Compliance is required to be included with the documentation the builder provides to the building owner at occupancy.

Responsible Designer Name: Jhim Handrex Meza	Responsible Designer Signature:
Company: Aurum Consulting Engineers	Date Signed:
Address: 60 Garden Ct., Suite 210	License: E21989
City/State/Zip: Monterey, CA 93940	Phone: 831-646-3330

STATE OF CALIFORNIA
OUTDOOR LIGHTING POWER ALLOWANCES
CEC-NRCC-LTO-03-E (Revised 01/16) CALIFORNIA ENERGY COMMISSION

CERTIFICATE OF COMPLIANCE	NRCC-LTO-03-E
Outdoor Lighting Power Allowances	(Page 1 of 4)
Project Name: Morgan Hill Library Expansion	Date Prepared: 2/6/2019

A. OUTDOOR LIGHTING POWER ALLOWANCE SUMMARY

1. General Hardscape Lighting Power Allowance (Site Total from Section B of NRCC-LTO-03-E)								1.	604
2. Additional Specific "use it or lose it" Lighting Power Allowances listed in each of these cells shall be identical to total allowed watts determined in Section C-1 to C-4 of NRCC-LTO-03-E.									
PER APPLICATION from Section C-1		PER UNIT LENGTH (SALES FRONTAGE) from Section C-2		PER HARDSCAPE AREA (ORNAMENTAL LIGHTING) from Section C-3		PER SPECIFIC AREA from Section C-4.			
50	+	0	+	0	+	0	=	2.	50
3. Sum Total ALLOWED Outdoor Lighting Wattage (add rows 1 and 2)								3.	654

B. GENERAL HARDSCAPE LIGHTING POWER ALLOWANCE FROM TABLE 140.7-A

Area Wattage Allowance (AWA)				Linear Wattage Allowance (LWA)			Initial Wattage Allowance (IWA)	Total General Hardscape Lighting Allowance
01	02	03	04	05	06	07	08	09
Name of Area	Illuminated Hardscape Area	AWA Per Square Foot	AWA (B02 x B03)	Perimeter Length of General Hardscape	LPA per Linear Foot	LWA (B05 x B06)	IWA (Watts)	B04 + B07 + B08
Pedestrian Hardscape	440	0.040	18	191	0.350	67	520	604
							TOTAL	604

STATE OF CALIFORNIA
OUTDOOR LIGHTING POWER ALLOWANCES
CEC-NRCC-LTO-03-E (Revised 01/16) CALIFORNIA ENERGY COMMISSION

CERTIFICATE OF COMPLIANCE	NRCC-LTO-03-E
Outdoor Lighting Power Allowances	(Page 2 of 4)
Project Name: Morgan Hill Library Expansion	Date Prepared: 2/6/2019

C. ADDITIONAL "USE IT OR LOSE IT" OUTDOOR LIGHTING POWER ALLOWANCES FOR SPECIFIC APPLICATIONS
- ☐ The additional specific outdoor lighting power allowance shall be the smaller of the allowed lighting power or the actual lighting power used.
- ☐ Use Outdoor Lighting Zone (OLZ) that is documented on page 1 of NRCC-LTO-01-E to calculate the specific wattage allowances.

C-1. WATTAGE ALLOWANCE PER APPLICATION – Table 140.7-B
- ☐ Available only for qualifying locations, which include Building Entrances or Exits; Primary Entrances to Senior Care Facilities, Police Stations, Hospitals, Fire Stations, and Emergency Vehicle Facilities; Drive Up Windows; Vehicle Service Station Uncovered Fuel Dispenser, ATM Machine Lighting
- ☐ If more than one luminaire type is used per location, use multiple rows for that location

01	02	03	04	05	06	07	08	09	10
	ALLOTTED WATTS			DESIGN WATTS					
Name of Location for Which Allowance is Claimed	Number of Qualifying Locations	Wattage Allowance per Qualifying Location	Allotted Watts (02 x 03)	Luminaire Code or Symbol	Luminaire Description	Luminaire Quantity	Watts per Luminaire	Design Watts (07 x 08)	Allowed Watts (smaller of 04 or 09)
Building Entrance	5	35	175	XAE	25w Wall Mounted LED	2	25.0	50	50
								Sum total allowance per application on this site:	50

C-2. WATTAGE ALLOWANCE PER UNIT LENGTH (Sales Frontage) from Table 140.7-B
- ☐ If more than one luminaire type is used per location, use multiple rows for that location

01	02	03	04	05	06	07	08	09	10
	ALLOTTED WATTS			DESIGN WATTS					
Name of Location for Which Allowance is Claimed	Linear Feet of Sales Frontage	Wattage Allowance per Linear Foot	Allotted Watts (02 x 03)	Luminaire Code or Symbol	Luminaire Description	Luminaire Quantity	Watts per Luminaire	Design Watts (07 x 08)	Allowed Watts (smaller of 04 or 09)
								Sum total allowance for sales frontage on the site:	0

STATE OF CALIFORNIA
OUTDOOR LIGHTING POWER ALLOWANCES
CEC-NRCC-LTO-03-E (Revised 01/16) CALIFORNIA ENERGY COMMISSION

CERTIFICATE OF COMPLIANCE	NRCC-LTO-03-E
Outdoor Lighting Power Allowances	(Page 3 of 4)
Project Name: Morgan Hill Library Expansion	Date Prepared: 2/6/2019

C-3. WATTAGE ALLOWANCE PER SQUARE FOOT OF HARDSCAPE AREA (Ornamental Lighting) – Table 140.7-B
- ☐ Allowance for the total site illuminated hardscape area. Luminaires qualifying for this allowance shall be rated for 100 watts or less as determined in accordance with Section 130.0(c), and shall be post-top luminaires, lanterns, pendant luminaires, or chandeliers.
- ☐ If more than one luminaire type is used per location, use multiple rows for that location

01	02	03	04	05	06	07	08	09	10
	ALLOTTED WATTS			DESIGN WATTS					
Name of area for which ornamental allowance is claimed	Square Feet of Hardscape	Wattage Allowance per Square Foot	Allotted Watts (02 x 03)	Luminaire Code or Symbol	Luminaire Description	Luminaire Quantity	Watts per Luminaire	Design Watts (07 x 08)	Allowed Watts (smaller of 04 or 09)
								Sum total allowance for ornamental lighting on the site:	0

C-4. WATTAGE ALLOWANCE PER SQUARE FOOT OF SPECIFIC AREA - Table 140.7-B
- ☐ Allowances for Building Facades; Outdoor Sales Lots; Vehicle Service Station Hardscape; Vehicle Service Station Canopies; Sales Canopies; Non-sales Canopies; Tunnels; Guard Stations; Student Pick-up/Drop-off zone: Outdoor Dining; Special Security Lighting for Retail Parking and Pedestrian Hardscape.
- ☐ If more than one luminaire type is used per location, use multiple rows for that location

01	02	03	04	05	06	07	08	09	10
	ALLOTTED WATTS			DESIGN WATTS					
Name of Location for Which Allowance is Claimed	Illuminated Area of Application	Wattage Allowance per square Foot	Allotted Watts (02 x 03)	Luminaire Code or Symbol	Luminaire Description	Luminaire Quantity	Watts per Luminaire	Design Watts (07 x 08)	Allowed Watts (smaller of 04 or 09)
								Sum total allowance for specific area on the site:	0

STATE OF CALIFORNIA
OUTDOOR LIGHTING POWER ALLOWANCES
CEC-NRCC-LTO-03-E (Revised 01/16) CALIFORNIA ENERGY COMMISSION

CERTIFICATE OF COMPLIANCE	NRCC-LTO-03-E
Outdoor Lighting Power Allowances	(Page 4 of 4)
Project Name: Morgan Hill Library Expansion	Date Prepared: 2/6/2019

DOCUMENTATION AUTHOR'S DECLARATION STATEMENT

1. I certify that this Certificate of Compliance documentation is accurate and complete.

Documentation Author Name: J. Elias Cosio	Documentation Author Signature:
Company: Aurum Consulting Engineers	Signature Date: 2/6/2019
Address: 60 Garden Ct, Suite 210	CEA Certification Identification (if applicable):
City/State/Zip: Monterey, CA 93940	Phone: 831-646-3330

RESPONSIBLE PERSON'S DECLARATION STATEMENT

I certify the following under penalty of perjury, under the laws of the State of California:
1. The information provided on this Certificate of Compliance is true and correct.
2. I am eligible under Division 3 of the Business and Professions Code to accept responsibility for the building design or system design identified on this Certificate of Compliance (responsible designer).
3. The energy features and performance specifications, materials, components, and manufactured devices for the building design or system design identified on this Certificate of Compliance conform to the requirements of Title 24, Part 1 and Part 6 of the California Code of Regulations.
4. The building design features or system design features identified on this Certificate of Compliance are consistent with the information provided on other applicable compliance documents, worksheets, calculations, plans and specifications submitted to the enforcement agency for approval with this building permit application.
5. I will ensure that a completed signed copy of this Certificate of Compliance shall be made available with the building permit(s) issued for the building, and made available to the enforcement agency for all applicable inspections. I understand that a completed signed copy of this Certificate of Compliance is required to be included with the documentation the builder provides to the building owner at occupancy.

Responsible Designer Name: Jhim Handrex Meza	Responsible Designer Signature:
Company: Aurum Consulting Engineers	Date Signed:
Address: 60 Garden Ct., Suite 210	License: E21989
City/State/Zip: Monterey, CA 93940	Phone: 831-646-3330

JOB COPY
These plans must be kept on the job at all times.
CITY OF MORGAN HILL
BUILDING DIVISION

WESTON MILES
ARCHITECTS
17500 Depot Street, Suite #200
Morgan Hill, CA 95037
1 •408 • 779 • 6686
• Architecture • Landscape •

LICENSED ARCHITECT CHARLES D. WESTON No. C 18,552 RENEWAL 08-31-19 STATE OF CALIFORNIA

NOT VALID WITHOUT SIGNATURE

AURUM CONSULTING ENGINEERS MONTEREY BAY, INC.
Project No. 16163.01
60 Garden Court • Suite 210 • Monterey, CA 93940
T.831.646.3330 • F.831.646.3336 • www.acemb.com

These drawings are instruments of service and are the property of AURUM CONSULTING ENGINEERS MONTEREY BAY, INC. All designs and other information in the drawings are for use on the specified project and shall not be used otherwise without the expressed written permission of AURUM CONSULTING ENGINEERS MONTEREY BAY, INC.

REGISTERED PROFESSIONAL ENGINEER JHIM HANDREX MEZA ELECTRICAL STATE OF CALIFORNIA

REVISIONS
1. 03/28/2019 PLAN REVIEW #2
2.
3.

CALIFORNIA ENERGY COMPLIANCE TITLE 24 (BUILDING EXTERIOR)

MORGAN HILL LIBRARY ADDITION

CITY OF MORGAN HILL
660 W MAIN AVE, MORGAN HILL, CA 95037

These drawings are instruments of service and are the property of WESTON MILES ARCHITECTS, INC. All designs and other information on the drawings are for use on the specified project and shall not be used otherwise without the expressed written permission of WESTON MILES ARCHITECTS, INC.

Written dimensions on these drawings shall have precedence over scaled dimensions. Contractors shall verify and be responsible for all dimensions and conditions on the job and this office shall be notified of any variations from the dimensions and conditions shown by these drawings. Shop details shall be submitted to this office for approval before proceeding with fabrication.

© Copyrighted 2019

DATE: 02/8/2019

JOB NO: 15058

E0.3

STATE OF CALIFORNIA
SOLAR READY AREAS
CEC-NRCC-SRA-01-E (Revised 07/16) CALIFORNIA ENERGY COMMISSION

CERTIFICATE OF COMPLIANCE	NRCC-SRA-01-E
Solar Ready Areas	(Page 1 of 3)
Project Name: Morgan Hill Expansion	Date Prepared: 03/25/2019

A. General Information

Project Address:

Building Type:
☐ Hotel/Motel building with ten stories or fewer ☐ High-rise multi-family building with ten stories or fewer
☑ Other nonresidential building with three stories or fewer
Solar-ready requirements do not apply to hotel/motel buildings and high-rise multifamily building with more than ten stories or other nonresidential buildings with more than three stories.

Type of Construction: ☐ New Construction ☑ Addition that increases roof area by more than 2,000 ft²
Solar-ready requirements do not apply to alterations or additions that increase the roof area by 2,000 ft² or less.

B. Solar-Ready
(Choose Path 01, 02, 03, 04, or 05 from below)

☑ **01. Allocated Solar Zone**

NRCC-SRA-02-E Minimum Solar Zone Area Worksheet is required to be submitted

Minimum Solar Zone Area (ft²)
This is quantity [G] from NRCC-SRA-02-E Minimum Solar Zone Area Worksheet

Proposed Solar Zone Area (ft²)
This is quantity [S] from NRCC-SRA-02-E Minimum Solar Zone Area Worksheet

The construction documents will indicate a location for inverters and metering equipment and a pathway for routing of conduit from the solar zone to the point of interconnection with the electrical service. The construction documents will indicate a pathway for routing of plumbing from the solar zone to the water heating system.

A copy of the construction documents or a comparable document indicating information about the solar zone and interconnection pathways will be provided to the occupant.

If the designer certifies that all above requirements have been met and the Proposed Solar Zone Area meets or exceeds the Minimum Solar Zone Area, the building complies, otherwise it does not comply. ○ does not comply ⦿ complies

☐ **02. Permanently Installed Solar Photovoltaic (PV) System**

	Total Roof Area (ft²)* [A]	Minimum Nameplate DC Power Rating (watts) [B] = A x 1watt/ft²	
		0	

* *New construction: report total roof area; Additions: report newly added roof area*

Will the proposed building have a permanently installed solar electric system that meets or exceeds the Minimum Nameplate DC Power Rating? ○ Yes ○ No
If yes, a *NRCI-SPV-01-E Certificate of Installation: Solar Photovoltaic System* documenting the installed system must be submitted as a condition of final approval.

Please check box to right if answered yes to all questions in this section. ☐ EXEMPT

☐ **03. Permanently Installed Solar Water Heating System**

Will the building have a permanently installed solar water heating system? ○ Yes ○ No
If yes, a *NRCI-STH-01-E Certificate of Installation: Solar Water Heating System* documenting the installed system must be submitted as condition of final approval.

Is the annual solar savings fraction equal to or greater than 0.2 in climate zones 1 through 9 or 0.35 in climate zones 10 through 16? ○ Yes ○ No

	Annual Solar Savings Fraction	How was Annual Solar Savings Fraction Calculated?	

Please check box to right if answered yes to all questions in this section. ☐ EXEMPT

STATE OF CALIFORNIA
SOLAR READY AREAS
CEC-NRCC-SRA-01-E (Revised 07/16) CALIFORNIA ENERGY COMMISSION

CERTIFICATE OF COMPLIANCE	NRCC-SRA-01-E
Solar Ready Areas	(Page 2 of 3)
Project Name: Morgan Hill Expansion	Date Prepared: 03/25/2019

☐ **04. Smart Thermostats and Alternative Efficiency Measure**

Is the building a high-rise multifamily building with ten stories or fewer? ○ Yes ○ No

Will all thermostats in each dwelling unit comply with Reference Joint Appendix 5 (JA5) and will they be capable of receiving and responding to Demand Response Signals prior to granting of an occupancy permit by the enforcing agency? ○ Yes ○ No

Will one of the following alternative efficiency measures be installed? ○ Yes ○ No
- A dishwasher that meets or exceeds the ENERGY STAR Program requirements with either a refrigerator that meets or exceeds the ENERGY STAR Program requirements or a whole house fan driven by an electronically commutated motor; or
- A home automation system capable of, at a minimum, controlling the appliances and lighting of the dwelling and responding to demand response signals; or
- Alternative plumbing piping to permit the discharge from the clothes washer and all showers and bathtubs to be used for an irrigation system in compliance with the California Plumbing Code and any applicable local ordinances; or
- A rainwater catchment system designed to comply with the California Plumbing Code and any applicable local ordinances, and that uses rainwater flowing from at least 65% of the available roof area.

Please check box to right if answered yes to all questions in this section. ☐ EXEMPT

☐ **05. Roof is Designed for Vehicle Traffic, Parking or for Heliport**

Will the roof be designed and approved to be used for vehicular traffic, parking or for a heliport. ○ Yes ○ No

Please provide building plan reference ____________________.

Please check box to right if answered yes to all questions in this section. ☐ EXEMPT

STATE OF CALIFORNIA
SOLAR READY AREAS
CEC-NRCC-SRA-01-E (Revised 07/16) CALIFORNIA ENERGY COMMISSION

CERTIFICATE OF COMPLIANCE	NRCC-SRA-01-E
Solar Ready Areas	(Page 3 of 3)
Project Name: Morgan Hill Expansion	Date Prepared: 03/25/2019

DOCUMENTATION AUTHOR'S DECLARATION STATEMENT
1. I certify that this Certificate of Compliance documentation is accurate and complete.

Documentation Author Name: Jhim Handrex Meza	Documentation Author Signature: [signature]
Company: Aurum Consulting Engineers	Signature Date:
Address: 60 Garden Ct. Suite 210	CEA/ HERS Certification Identification (if applicable):
City/State/Zip: Monterey, CA 93940	Phone: 831-646-3330

RESPONSIBLE PERSON'S DECLARATION STATEMENT
I certify the following under penalty of perjury, under the laws of the State of California:
1. The information provided on this Certificate of Compliance is true and correct.
2. I am eligible under Division 3 of the Business and Professions Code to accept responsibility for the building design or system design identified on this Certificate of Compliance (responsible designer).
3. The energy features and performance specifications, materials, components, and manufactured devices for the building design or system design identified on this Certificate of Compliance conform to the requirements of Title 24, Part 1 and Part 6 of the California Code of Regulations.
4. The building design features or system design features identified on this Certificate of Compliance are consistent with the information provided on other applicable compliance documents, worksheets, calculations, plans and specifications submitted to the enforcement agency for approval with this building permit application.
5. I will ensure that a completed signed copy of this Certificate of Compliance shall be made available with the building permit(s) issued for the building, and made available to the enforcement agency for all applicable inspections. I understand that a completed signed copy of this Certificate of Compliance is required to be included with the documentation the builder provides to the building owner at occupancy.

Responsible Designer Name: Jhim Handrex Meza	Responsible Designer Signature: [signature]
Company: Aurum Consulting Engineers	Date Signed:
Address: 60 Garden Ct. Suite 210	License: E21989
City/State/Zip: Monterey, CA 93940	Phone: 831-646-3330

STATE OF CALIFORNIA
MINIMUM SOLAR ZONE AREA WORKSHEET
CEC-NRCC-SRA-02-E (Revised 04/16) CALIFORNIA ENERGY COMMISSION

CERTIFICATE OF COMPLIANCE	NRCC-SRA-02-E
Minimum Solar Zone Area Worksheet	Page 1 of 4
Project Name: Morgan Hill Library Expansion	Date Prepared: 03/25/2019

Solar Zone Area (requirements in §110.10(b)1B)
This worksheet applies to hotel/motel occupancies and high-rise multifamily buildings with ten stories or fewer, and all other nonresidential buildings with three stories or fewer that comply with the solar zone requirement through Compliance Path A: Allocated Solar Zone in the NRCC-SRA-01-E Certificate of Compliance Solar Ready Areas.
The worksheet applies to all additions that increase the roof area by more than 2,000 ft².

A. General Information
Project Address: 660 W. Main Ave
Total Roof Area: ☑ Less than or equal to 10,000 ft² ☐ Greater than 10,000 ft²
Phase of Construction: ☐ New Construction ☑ Addition that increases roof area by more than 2,000 ft²

Step 1: Determine Minimum Solar Zone Area
Calculate the minimum solar zone area using one of the two options provided below. Use option 2 if your roofs and overhangs are shaded.

Method 1: Minimum Solar Zone Area Based on Total Roof Area (requirements in 110.10(b)1B)

New Construction: Total roof area (ft²) Additions: Total roof area added to building (ft²)	A	2,419
New Construction: Area of roof covered with skylights (ft²) Additions: Area of new roof area covered with skylights (ft²)	B	0
Minimum solar zone area	C = 0.15 x (A – B)	362.85

Note: For additions, if A≤ 2,000 ft² then addition does not need to comply with solar zone requirements

Method 2: Minimum Solar Zone Area Based on Potential Solar Zone (requirements in Exception 3 to 110.10(b)1B)
The enforcement agency may require additional documentation that describes how the reduced solar zone area was determined.

Method/Tool(s) used to quantify annual solar access: (for example, "Software X", "CAD Tool Y")		
Area of low-sloped roof (ratio of rise to run of 2:12 or less) where the annual solar access is 70% or greater.* (ft²)	D	
Area of steep-sloped roof (ratio of rise to run is greater than 2:12) that is oriented between 110° and 270° and annual solar access is 70% or greater.*(ft²)	E	
Minimum solar zone area	F = 0.5 x (D + E)	0
* For new construction consider total roof area; for additions consider newly added roof area		
Minimum solar zone area (either C or F) (ft²)	G	362.85

STATE OF CALIFORNIA
MINIMUM SOLAR ZONE AREA WORKSHEET
CEC-NRCC-SRA-02-E (Revised 04/16) CALIFORNIA ENERGY COMMISSION

CERTIFICATE OF COMPLIANCE	NRCC-SRA-02-E
Minimum Solar Zone Area Worksheet	Page 2 of 4
Project Name: Morgan Hill Library Expansion	Date Prepared: 03/25/2019

Step 2: Allocated Solar Zone Subareas

Subarea ID	Building Plan Reference	Slope of Roof or Overhang	If Steep Slope, roof or overhang oriented between 110° and 270°	Subarea complies with Part 9 of Title 24[A]	Plane containing the solar zone is free of obstructions[B]	Subarea is located the appropriate distance from obstructions[C]	Smallest dimension is greater than 5 feet	Subarea meet minimum area requirement[D]	Subarea Qualifies[E]	Area (ft²)
H	I	J	K	L	M	N	O	P	Q	R
A	A2.7	Low	NA	Yes	Yes	Yes	Yes	Yes	Yes	362.85
Add Row	Remove Last									
Proposed Solar Zone Area (ft²) (sum of all qualifying subareas)[S]										362.85

A. The solar zone shall comply with access, pathway, smoke ventilation, and spacing requirements as specified in Title 24, Part 9 or other Parts of Title 24 or in any requirements adopted by a local jurisdiction.
B. No obstructions, including but not limited to, vents, chimneys, architectural features, and roof mounted equipment, shall be located in the solar zone.
C. Solar zone must be located no closer than twice the distance, measured in the horizontal plane, of the height difference between the highest obstruction and the horizontal projection of the nearest point of the solar zone, measured in the vertical plane.
D. If the building roof area ≤ 10,000 ft² then minimum area is 80 ft². If building roof area > 10,000 ft² then minimum area is 160 ft².
E. Check "yes" if answers to questions in columns K through P are "yes".

Building complies with Minimum Solar Zone Area requirement is Proposed Solar Zone Area [S] is equal to or greater than the Minimum Solar Zone Area [G]	**COMPLIES**

STATE OF CALIFORNIA
MINIMUM SOLAR ZONE AREA WORKSHEET
CEC-NRCC-SRA-02-E (Revised 04/16) CALIFORNIA ENERGY COMMISSION

CERTIFICATE OF COMPLIANCE	NRCC-SRA-02-E
Minimum Solar Zone Area Worksheet	Page 3 of 4
Project Name: Morgan Hill Library Expansion	Date Prepared: 03/25/2019

DOCUMENTATION AUTHOR'S DECLARATION STATEMENT
1. I certify that this Certificate of Compliance documentation is accurate and complete.

Documentation Author Name: Jhim Handrex Meza	Documentation Author Signature: [signature]
Company: Aurum Consulting Engineers	Signature Date:
Address: 60 Garden Ct. Suite 210	CEA/ HERS Certification Identification (if applicable):
City/State/Zip: Monterey, CA 93940	Phone: 831-646-3330

RESPONSIBLE PERSON'S DECLARATION STATEMENT
I certify the following under penalty of perjury, under the laws of the State of California:
1. The information provided on this Certificate of Compliance is true and correct.
2. I am eligible under Division 3 of the Business and Professions Code to accept responsibility for the building design or system design identified on this Certificate of Compliance (responsible designer).
3. The energy features and performance specifications, materials, components, and manufactured devices for the building design or system design identified on this Certificate of Compliance conform to the requirements of Title 24, Part 1 and Part 6 of the California Code of Regulations.
4. The building design features or system design features identified on this Certificate of Compliance are consistent with the information provided on other applicable compliance documents, worksheets, calculations, plans and specifications submitted to the enforcement agency for approval with this building permit application.
5. I will ensure that a completed signed copy of this Certificate of Compliance shall be made available with the building permit(s) issued for the building, and made available to the enforcement agency for all applicable inspections. I understand that a completed signed copy of this Certificate of Compliance is required to be included with the documentation the builder provides to the building owner at occupancy.

Responsible Designer Name: Jhim Handrex Meza	Responsible Designer Signature: [signature]
Company: Aurum Consulting Engineers	Date Signed:
Address: 60 Garden Ct. Suite 210	License: E21989
City/State/Zip: Monterey, CA 93940	Phone: 831-646-3330

CERTIFICATE OF COMPLIANCE – USER INSTRUCTIONS	NRCC-SRA-02-E
Minimum Solar Zone Area Worksheet	Page 1 of 1

Figure 7.1 Artistic Depiction of "H" and "D"

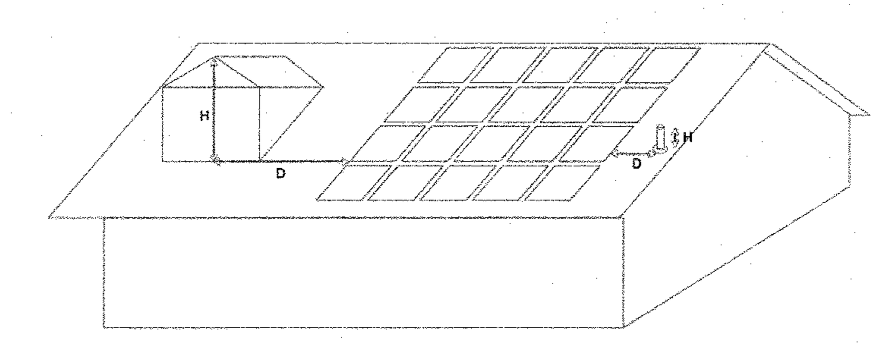

Source: California Energy Commission

Any obstruction, located on the roof or any other part of the building that projects above the solar zone shall be located at a sufficient horizontal distance away from the solar zone, in order to reduce the resulting shading of the solar zone. For each obstruction, the horizontal distance ("D") from the obstruction to the solar zone shall be at least two times the height difference ("H") between the highest point of the obstruction and the horizontal projection of the nearest point of the solar zone.

$$D \geq 2 \times H$$

JOB COPY
These plans must be kept on the job at all times.
CITY OF MORGAN HILL
BUILDING DIVISION

WESTON MILES
ARCHITECTS
17500 Depot Street, Suite #200
Morgan Hill, CA 95037
1 •408 • 779 • 6686
• Architecture • Landscape •

LICENSED ARCHITECT CHARLES D. WESTON No. C 18,552 RENEWAL 08-31-19 STATE OF CALIFORNIA
NOT VALID WITHOUT SIGNATURE

AURUM CONSULTING ENGINEERS MONTEREY BAY, INC.
Project No. 16163.01
60 Garden Court • Suite 210 • Monterey, CA 93940
T.831.646.3330 • F.831.646.3336 • www.acemb.com

These drawings are instruments of service and are the property of AURUM CONSULTING ENGINEERS MONTEREY BAY, INC. All designs and other information in the drawings are for use on the specified project and shall not be used otherwise without the expressed written permission of AURUM CONSULTING ENGINEERS MONTEREY BAY, INC.

REGISTERED PROFESSIONAL ENGINEER JHIM HANDREX MEZA ELECTRICAL STATE OF CALIFORNIA

REVISIONS
1 03/28/2019 PLAN REVIEW #2
2
3

CALIFORNIA ENERGY COMPLIANCE TITLE 24 (SOLAR READY AREAS)

MORGAN HILL LIBRARY ADDITION

CITY OF MORGAN HILL
660 W MAIN AVE, MORGAN HILL, CA 95037

These drawings are instruments of service and are the property of WESTON MILES ARCHITECTS, INC. All designs and other information on the drawings are for use on the specified project and shall not be used otherwise without the expressed written permission of WESTON MILES ARCHITECTS, INC.

Written dimensions on these drawings shall have precedence over scaled dimensions. Contractors shall verify and be responsible for all dimensions and conditions on the job and this office shall be notified of any variations from the dimensions and conditions shown by these drawings. Shop details shall be submitted to this office for approval before proceeding with fabrication.

© Copyrighted 2019

DATE: 02/8/2019
JOB NO: 15058

E0.4 (1)

G:\Projects\16Jobs\16163.01 Morgan Hill City Library Expansion RFQ\Dwg01\16163E0.4.dwg, 3/28/2019 5:15:47 PM, elias, DWG To PDF.pc3

STATE OF CALIFORNIA
Electrical Power Distribution
CEC-NRCC-ELC-01-E (Revised 01/16) — CALIFORNIA ENERGY COMMISSION

CERTIFICATE OF COMPLIANCE	NRCC-ELC-01-E
Electrical Power Distribution	Page 1 of 4
Project Name: Morgan Hill Library Expansion	Date Prepared: 03/25/2019

General Information

Project Address: 660 W. Main Ave.		Climate Zone: 4	Conditioned Floor Area : 1,800 Unconditioned Floor Area :
Building Type:	☑ Nonresidential	☐ High-Rise Residential	☐ Hotel/Motel
☐ Schools	☐ Relocatable Public Schools	☐ Conditioned Spaces	☐ Unconditioned Spaces
Phase of Construction:	☐ New Construction	☐ Addition	☐ Alteration

In the table below identify all applicable construction documents that specify the requirements for the scope of responsibility reported by this certificate. Use additional pages as needed to list all construction documents related to compliance of Section 130.5.

Document Number	Document Title/Descriptions (include description information for Table or Schedule if it contains compliance information)	Document Sheet # or Page #	Indicate which subsection of Section 130.5 is related to the document (e.g. 130.5(a) for service electrical metering)
E1.1	Single Line Diagram and Panelboard Schedules	E1.1	130.5(b) and 130.5(c)

Add Row Remove Last

A. Service Electrical Metering

Check one of the three boxes below if the electrical power distribution system is in compliance with Section 130.5(a).

☐ For newly installed electrical service in newly constructed buildings, Service Electrical Metering is required according to Section 130.5(a). *Fill out Column 1 through 6 of table below.*

☐ For new or replacement electrical service equipment in existing buildings, Service Electrical Metering is required according to Section 141.0(b)2Pi. *Fill out Column 1 through 6 of table below.*

☑ EXCEPTION to Electrical Service Metering: Service or feeder for which the utility company provides a metering system that indicates instantaneous kW demand and kWh for a utility-defined period. *Fill out Column 1, 2 and 6 of table below with the compliance information.*

Fill out a separate line for each electrical service that is connected to the building.

Electrical Service Schedule	Electrical Service Rating	Metering Capabilities (check all that are present)				Exception to 130.5 (a)	Field Inspector
01	02	03	04	05	06	07	08
Electrical Service Designation/ Location/Description	kVA	Instantaneous (at the time) kW	Historical peak (kW)	Tracking kWh for a user-definable period	kWh per rate period	Utility metering system	Check that the metering complies
Existing MSB/Electrical Room	797	☐	☐	☐	☐	☑	☐

Add Row Remove Last

STATE OF CALIFORNIA
Electrical Power Distribution
CEC-NRCC-ELC-01-E (Revised 01/16) — CALIFORNIA ENERGY COMMISSION

CERTIFICATE OF COMPLIANCE	NRCC-ELC-01-E
Electrical Power Distribution	Page 2 of 4
Project Name: Morgan Hill Library Expansion	Date Prepared: 03/25/2019

B. Separation of Electrical Circuits for Electrical Energy Monitoring

Check all boxes below if the electrical power distribution system is in compliance with Section 130.5(b).

☒ The electrical power distribution system meets the separation of electrical circuits for electrical energy monitoring requirement of Section 130.5(b). The electrical power distribution systems is designed so that measurement devices can monitor the electrical energy usage of load types according to TABLE 130.5-B.

☐ Describe the electrical power distribution system installed and the compliance method chosen in meeting the requirement of Section 130.5(b). Use the space below to include the information. Examples of compliance methods are detailed in Nonresidential Compliance Manual Chapter 8.

Fill out Column 1 thru 3 with the compliance information.

General Information	Electrical Power Distribution System Information and Method of compliance	Electrical Service Rating	Enforcement Agency
01	02	03	04
Electrical Service Designation/Location/Description	Describe the electrical power distribution system installed and the compliance method used	kVA	Check that the system complies
Panel HM/ Closet	Each branch circuit has the space to install a monitor device to measure the load type separately.	797	☐
Panel 1LG/Closet	Each branch circuit has the space to install a monitor device to measure the load type separately.		

Field Inspector Notes:

STATE OF CALIFORNIA
Electrical Power Distribution
CEC-NRCC-ELC-01-E (Revised 01/16) — CALIFORNIA ENERGY COMMISSION

CERTIFICATE OF COMPLIANCE	NRCC-ELC-01-E
Electrical Power Distribution	Page 3 of 4
Project Name: Morgan Hill Library Expansion	Date Prepared: 03/25/2019

C. Voltage Drop

Check all boxes below if he electrical power distribution system is in compliance with Section 130.5(c).

	Enforcement Agency Check that the system complies
☑ The electrical power distribution system meets the voltage drop requirement of Section 130.5(c). The maximum combined voltage drop on feeder conductors and branch circuit conductors to the farthest connected load or outlet, do not exceed 5%.	☐
☑ Voltage drop calculation documents showing compliance to Section 130.5(c) are submitted as part of the compliance document submittal.	☐

D. Circuit Controls for 120-Volt Receptacles and Controlled Receptacles

Check one or more boxes below for applicable requirements of Section 130.5(d) for the electrical power distribution system.

	Field Inspector Check that the system complies
☐ The control is capable of automatically shutting OFF the controlled receptacles when the space is typically unoccupied, either at the receptacle or circuit level. For the automatic time switch control, it incorporates an override control that allows the controlled receptacle to remain ON for no more than 2 hours when an override is initiated and an automatic holiday "shut-OFF" feature that turns OFF all loads for at least 24 hours and then resumes the normally scheduled operation. Countdown timer switches are not be used to comply with the automatic time switch control requirements. The controls meet the requirement of Section 130.5(d)1.	☐
☐ There is at least one controlled receptacle within 6 ft from each uncontrolled receptacle. Where receptacles are installed in modular furniture in open office area, at least one controlled receptacle is installed at each workstation. The receptacles meet the requirement of Section 130.5(d)2.	☐
☐ There are installed split wired receptacles with at least one controlled and one uncontrolled receptacle. Where receptacles are installed in modular furniture in open office area, at least one controlled receptacle is installed at each workstation. The receptacles meet the requirement of Section 130.5(d)2.	☐
☐ Permanent and durable marking for controlled receptacles or circuits to differentiate them from uncontrolled receptacles or circuits is provided. The markings meet the requirement of Section 130.5(d)3.	☐
☐ For hotel and motel guest rooms, there are controlled receptacles for at least one-half of the 120-volt receptacles in each guest room. Electric circuits serving controlled receptacles in guestrooms are installed to have captive key controls, occupancy sensing controls, or automatic controls so the power is switched off no longer than 30 minutes after the guest room has been vacated. The receptacles meet the requirement of Section 130.5(d)4.	☐
☐ Receptacles that are only for the following purposes are excepted from Section 130.5(d): - Receptacles specifically for refrigerators and water dispensers in kitchen areas. - Receptacles located a minimum of six ft above the floor that are specifically for clocks. - Receptacles for network copiers, fax machines, A/V and data equipment other than personal computers in copy rooms. - Receptacles on circuits rated more than 20 amperes. - Receptacles connected to an uninterruptible power supply (UPS) that are intended to be in continuous use, 24 hours per day/365 days per year, and are marked to differentiate them from other uncontrolled receptacles or circuits.	☐

STATE OF CALIFORNIA
Electrical Power Distribution
CEC-NRCC-ELC-01-E (Revised 01/16) — CALIFORNIA ENERGY COMMISSION

CERTIFICATE OF COMPLIANCE	NRCC-ELC-01-E
Electrical Power Distribution	Page 4 of 4
Project Name: Morgan Hill Library Expansion	Date Prepared: 03/25/2019

DOCUMENTATION AUTHOR'S DECLARATION STATEMENT

1. I certify that this Certificate of Compliance documentation is accurate and complete.

Documentation Author Name: Jhim Handrex Meza	Documentation Author Signature:
Company: Aurum Consulting Engineers	Signature Date:
Address: 80 Garden Ct. Suite 210	CEA / HERS Certification Identification (if applicable):
City/State/Zip: Monterey, CA 93940	Phone: 831-646-3330

RESPONSIBLE PERSON'S DECLARATION STATEMENT

I certify the following under penalty of perjury, under the laws of the State of California:

1. The information provided on this Certificate of Compliance is true and correct.
2. I am eligible under Division 3 of the Business and Professions Code to accept responsibility for the building design or system design identified on this Certificate of Compliance (responsible designer).
3. The energy features and performance specifications, materials, components, and manufactured devices for the building design or system design identified on this Certificate of Compliance conform to the requirements of Title 24, Part 1 and Part 6 of the California Code of Regulations.
4. The building design features or system design features identified on this Certificate of Compliance are consistent with the information provided on other applicable compliance documents, worksheets, calculations, plans and specifications submitted to the enforcement agency for approval with this building permit application.
5. I will ensure that a completed signed copy of this Certificate of Compliance shall be made available with the building permit(s) issued for the building, and made available to the enforcement agency for all applicable inspections. I understand that a completed signed copy of this Certificate of Compliance is required to be included with the documentation the builder provides to the building owner at occupancy.

Responsible Designer Name: Jhim Handrex Meza	Responsible Designer Signature:
Company: Aurum Consulting Engineers	Date Signed:
Address: 80 Garden Ct. Suite 210	License: E21989
City/State/Zip: Monterey, CA 93940	Phone: 831-646-3330

JOB COPY
These plans must be kept on the job at all times.
CITY OF MORGAN HILL
BUILDING DIVISION

WESTON MILES
ARCHITECTS
17500 Depot Street, Suite #200
Morgan Hill, CA 95037
T •408 • 779 • 6686
• Architecture • Landscape •

REGISTERED ARCHITECT — CHARLES WESTON MILES — No. C 18,552 — RENEWAL 02-01-20 — STATE OF CALIFORNIA
NOT VALID WITHOUT SIGNATURE

AURUM CONSULTING ENGINEERS
MONTEREY BAY, INC.
Project No. 16163.01
80 Garden Court • Suite 210 • Monterey, CA 93940
T 831.646.3330 • F 831.646.3350 • www.acemb.com

These drawings are instruments of service and are the property of AURUM CONSULTING ENGINEERS MONTEREY BAY, INC. All designs and other information in the drawings are for use on the specified project and shall not be used otherwise without the express written permission of AURUM CONSULTING ENGINEERS MONTEREY BAY, INC.

REGISTERED PROFESSIONAL ENGINEER — JHIM HANDREX MEZA — No. E21989 — ELECTRICAL — STATE OF CALIFORNIA

REVISIONS
1 — 03/28/2019 PLAN REVIEW #2
2
3

CALIFORNIA ENERGY COMPLIANCE TITLE 24 (ELECTRICAL POWER DISTRIBUTION)

MORGAN HILL LIBRARY ADDITION

CITY OF MORGAN HILL
660 W MAIN AVE, MORGAN HILL, CA 95037

These drawings are instruments of service and are the property of WESTON MILES ARCHITECTS, INC. All designs and other information on the drawings are for use on the specified project and shall not be used otherwise without the expressed written permission of WESTON MILES ARCHITECTS, INC.

Written dimensions on these drawings shall have precedence over scaled dimensions. Contractors shall verify and be responsible for all dimensions and conditions on the job and this office shall be notified of any variations from the dimensions and conditions shown by these drawings. Shop details shall be submitted to this office for approval before proceeding with fabrication.

© Copyrighted 2019

DATE: 02/8/2019
JOB NO: 15058

E0.5 — 1

G:\Projects\16\Jobs\16163.01 Morgan Hill City Library Expansion RFQ\Dwg\2011\16163E0.5.dwg, 3/28/2019 5:11:05 PM, ellas,
DWG To PDF.pc3

PANELBOARD SCHEDULES

PANEL HM

Voltage:	277/480V,3ø
Wire:	4W
Type:	NEMA 1
Mains:	M.L.O.

[1] [4]

Bussing:	150A
Feed:	TOP
Mounting:	SURFACE
A.I.C.	10,000

Load	A	B	C	Bkr	Ck	abc	Ck	Bkr	A	B	C	Load
AC - 1	5097				1		2	20/1				SPARE
AC - 1		5097		25/3	3		4	20/1				SPARE
AC - 1			5097		5		6	20/1				SPARE
AC - 2	5097				7		8	-				SPACE ONLY
AC - 2		5097		25/3	9		10	-				SPACE ONLY
AC - 2			5097		11		12	-				SPACE ONLY
SPACE ONLY				-	13		14	-				SPACE ONLY
SPACE ONLY				-	15		16	-				SPACE ONLY
SPACE ONLY				-	17		18	-				SPACE ONLY
SPACE ONLY				-	19		20	-				SPACE ONLY
SPACE ONLY				-	21		22	-				SPACE ONLY
SPACE ONLY				-	23		24	-				SPACE ONLY
SPACE ONLY				-	25		26	-				SPACE ONLY
SPACE ONLY				-	27		28	-				SPACE ONLY
SPACE ONLY				-	29		30	-				SPACE ONLY
	10194	10194	10194						0	0	0	

[1] SUBMITTAL SHALL MATCH EXACT BREAKER LOCATIONS SHOWN.
[2] LABEL PANEL FOR SHORT CIRCUIT AMPS AVAILABLE PER CEC 110-24.

KVA Phase A	10.2
KVA Phase B	10.2
KVA Phase C	10.2

Total Connected Load KVA	30.6
Total Load Amperes	37

PANEL 1LG

Voltage:	120/208V,3ø
Wire:	4W
Type:	NEMA 1
Mains:	M.L.O.

[1] [2]

Bussing:	225A
Feed:	TOP
Mounting:	SURFACE
A.I.C.	10,000

Load	A	B	C	Bkr	Ck	abc	Ck	Bkr	A	B	C	Load
PROGRAM ROOM - RECEPTS	720			20/1	1		2	20/1	540			PROGRAM ROOM - RECEPTS
PROGRAM ROOM - RECEPTS		540		20/1	3		4	20/1		400		CEILING PROJECTOR
MOTORIZED SHADES			750	20/1	5		6	20/1			800	CHILDREN ACTV. - RECEPTS/TV
IDF	400			20/1	7		8	20/1	540			CHILDREN ACTV. - RECEPTS
LARGE MOTORIZED SHADES		600		20/1	9		10	20/1		400		PROJECTOR SCREEN - PRGRM RM
DRAIN PUMP			540	15/1	11		12	20/1			360	PROGRAM ROOM - RECEPTS
SPARE				20/1	13		14	20/1				SPARE
SPARE				20/1	15		16	20/1				SPARE
SPARE				20/1	17		18	20/1				SPARE
SPACE ONLY				-	19		20	20/1				SPARE
SPACE ONLY				-	21		22	-				SPACE ONLY
SPACE ONLY				-	23		24	-				SPACE ONLY
SPACE ONLY				-	25		26	-				SPACE ONLY
SPACE ONLY				-	27		28	-				SPACE ONLY
SPACE ONLY				-	29		30	-				SPACE ONLY
SPACE ONLY				-	31		32	-				SPACE ONLY
SPACE ONLY				-	33		34	-				SPACE ONLY
SPACE ONLY				-	35		36	-				SPACE ONLY
SPACE ONLY				-	37		38	20/1	180			ROOF - RECEPT
ELECTRIC WATER HEATER		2000		30/2	39		40	20/1				SPARE
ELECTRIC WATER HEATER			2000		41		42	20/1				SPARE
	1120	3140	3290						1260	800	1160	

[1] SUBMITTAL SHALL MATCH EXACT BREAKER LOCATIONS SHOWN.
[2] LABEL PANEL FOR SHORT CIRCUIT AMPS AVAILABLE PER CEC 110-24.

KVA Phase A	2.4
KVA Phase B	3.9
KVA Phase C	4.5

Total Connected Load KVA	10.8
Total Load Amperes	30

REVISED PANEL HB

Voltage:	277/480V,3ø
Wire:	4W
Type:	NEMA 1
Mains:	M.L.O.

Bussing:	100A
Feed:	-
Mounting:	FLUSH
A.I.C.	EXISTING

	Load	A	B	C	Bkr	Ck	abc	Ck	Bkr	A	B	C	Load	
3	CHILDRENS ACT/PROGRAM RM - LTG	2600			20/1	1		2	20/1	1000			EXISTING LOAD	1
2	SPARE				20/1	3		4	20/1		1000		EXISTING LOAD	1
2	SPARE				20/1	5		6	20/1			1000	EXISTING LOAD	1
2	SPARE				20/1	7		8	20/1	500			EXISTING LOAD	1
2	SPARE				20/1	9		10	20/1		500		EXISTING LOAD	1
2	SPARE				20/1	11		12	20/1			500	EXISTING LOAD	1
2	SPARE				20/1	13		14	20/1	500			EXISTING LOAD	1
2	SPARE				20/1	15		16	20/1		500		EXISTING LOAD	1
2	SPARE				20/1	17		18	20/1			500	EXISTING LOAD	1
2	SPARE				20/1	19		20	20/1	500			EXISTING LOAD	1
2	SPARE				20/1	21		22	20/1		500		EXISTING LOAD	1
2	SPARE				20/1	23		24	20/1			500	EXISTING LOAD	1
	SPACE ONLY				-	25		26	20/1	500			EXISTING LOAD	1
	SPACE ONLY				-	27		28	20/1		500		EXISTING LOAD	1
	SPACE ONLY				-	29		30	20/1			500	EXISTING LOAD	1
		2600	0	0						3000	3000	3000		

[1] EXISTING LOAD AND CB TO REMAIN.
[2] EXISTING SPARE CB TO REMAIN.
[3] ADDED LOAD TO EXISTING SPARE CB.

KVA Phase A	5.6
KVA Phase B	3.0
KVA Phase C	3.0

Total Connected Load KVA	11.6
Total Load Amperes	14

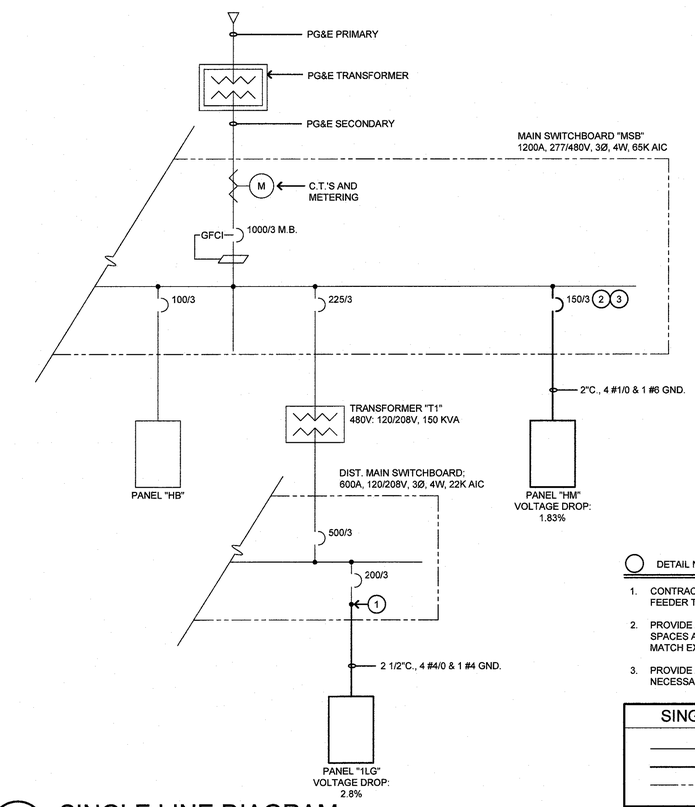

1 SINGLE LINE DIAGRAM
NO SCALE

DETAIL NOTES:

1. CONTRACTOR SHALL CONNECT NEW ELECTRICAL FEEDER TO EXISTING SPARE CIRCUIT BREAKER.
2. PROVIDE AND INSTALL NEW CIRCUIT BREAKER AT SPACES AVAILABLE AS NOTED. NEW BREAKERS SHALL MATCH EXISTING IN TYPE AND AIC RATING.
3. PROVIDE AND INSTALL MOUNTING HARDWARE AS NECESSARY FOR COMPLETE INSTALLATION.

SINGLE LINE DIAGRAM LEGEND

————————	(EXISTING)
————————	(NEW)
—·—·—·—·—	(E) FLOOR/PAD MOUNTED EQUIPMENT

JOB COPY
These plans must be kept on the job at all times.
CITY OF MORGAN HILL
BUILDING DIVISION

WESTON MILES
ARCHITECTS
17500 Depot Street, Suite #200
Morgan Hill, CA 95037
1 •408 • 779 • 6686
• Architecture • Landscape •

LICENSED ARCHITECT
WESTON MILES BRECKENRIDGE
No. C 18,552
RENEWAL 05-01-19
STATE OF CALIFORNIA

NOT VALID WITHOUT SIGNATURE

AURUM CONSULTING ENGINEERS
MONTEREY BAY, INC.
Project No. 18183.01
60 Garden Court • Suite 210 • Monterey, CA 93940
T 831.646.3300 • F 831.646.3306 • www.acemb.com

These drawings are instruments of service and are the property of AURUM CONSULTING ENGINEERS MONTEREY BAY, INC. All designs and other information on the drawings are for use on the specified project and shall not be used otherwise without the express written permission of AURUM CONSULTING ENGINEERS MONTEREY BAY, INC.

REGISTERED PROFESSIONAL ENGINEER
DAVID HANDLEY
No. E-18962
ELECTRICAL
STATE OF CALIFORNIA

REVISIONS
1 03/28/2019 PLAN REVIEW #2
2
3

ELECTRICAL SINGLE LINE DIAGRAM & PANELBOARD SCHEDULES

MORGAN HILL LIBRARY ADDITION

CITY OF MORGAN HILL
660 W MAIN AVE, MORGAN HILL, CA 95037

These drawings are instruments of service and are the property of WESTON MILES ARCHITECTS, INC. All designs and other information on the drawings are for use on the specified project and shall not be used otherwise without the expressed written permission of WESTON MILES ARCHITECTS, INC.

Written dimensions on those drawings shall have precedence over scaled dimensions. Contractors shall verify and be responsible for all dimensions and conditions on the job and this office shall be notified of any variations from the dimensions and conditions shown by these drawings. Shop details shall be submitted to this office for approval before proceeding with fabrication.

© Copyrighted 2019

DATE: 02/8/2019

JOB NO: 15058

E1.1

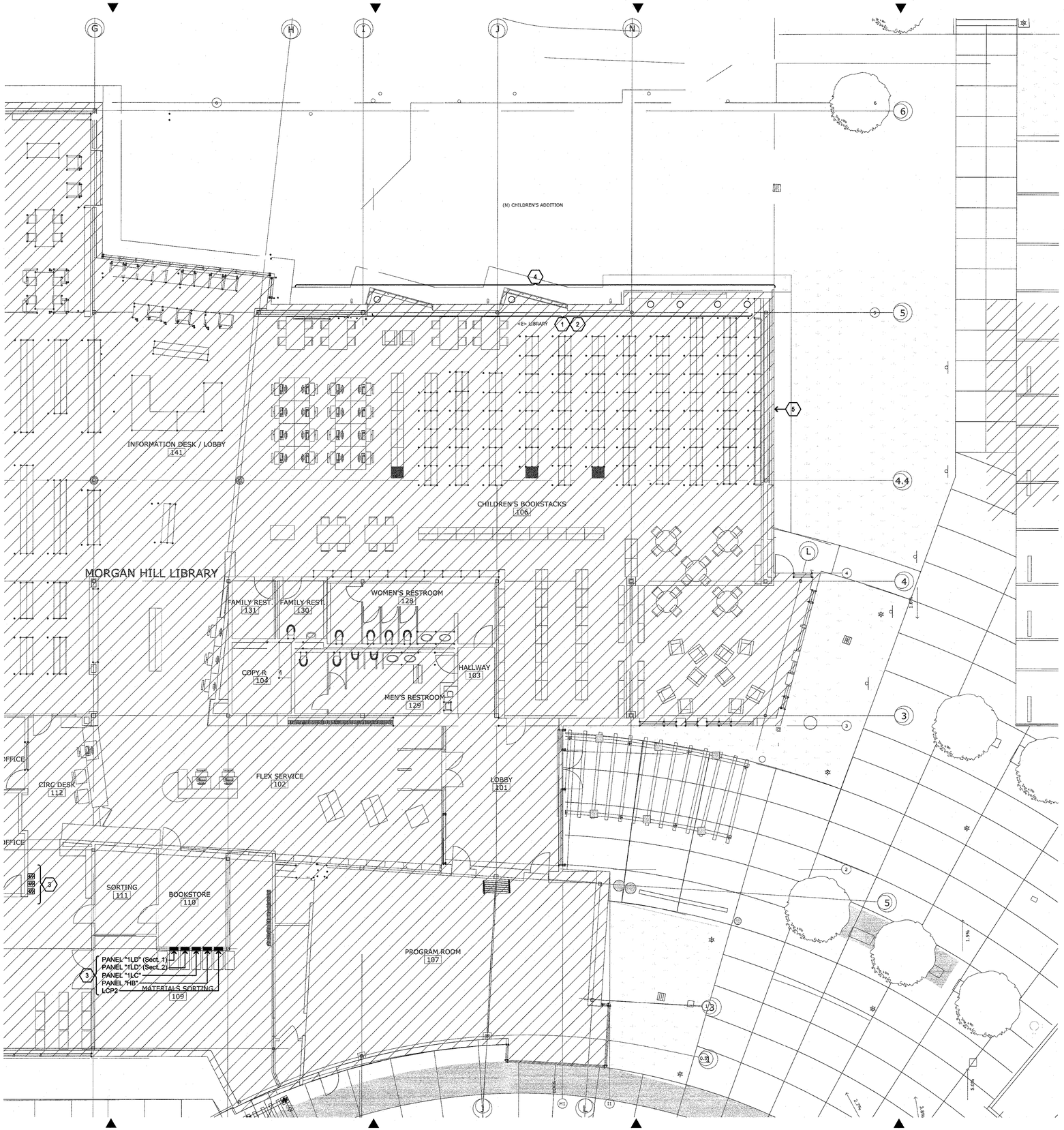

SHEET NOTES

1. CONTRACTOR SHALL REMOVE AND SALVAGE (3) PENDANT LIGHT FIXTURES FOR REINSTALLATION UNDER NEW WORK; SEE SHEET E5.2.
2. UNLESS OTHERWISE NOTED, CONTRACTOR SHALL DEMOLISH ALL ELECTRICAL DEVICES, EQUIPMENT AND LIGHT FIXTURES ALONG THIS WALL PER GENERAL DEMOLITION NOTES THIS SHEET.
3. EXISTING TO REMAIN.
4. CONTRACTOR SHALL DEMOLISH ALL EXTERIOR ELECTRICAL DEVICES IMPACTED BY DEMOLITION WORK PER GENERAL DEMOLITION NOTES ON THIS SHEET.
5. UNLESS OTHERWISE NOTED, NO ELECTRICAL DEMOLITION WORK THIS AREA.

GENERAL DEMOLITION NOTES

A. CONTRACTOR SHALL FIELD VERIFY EXTENT OF ELECTRICAL DEMOLITION AND QUANTITIES OF ELECTRICAL TO BE REMOVED AS DICTATED BY THE REQUIREMENTS OF THE PROJECT.

B. REMOVAL SHALL INCLUDE WIRING, RACEWAY, BOXES, SWITCHES, LIGHT FIXTURES, ETC. AS INDICATED ON THE PLANS AND AS REQUIRED BY THESE DEMOLITION NOTES.

C. RACEWAYS ASSOCIATED WITH ELECTRICAL BEING DEMOLISHED WHICH ARE CONCEALED IN EXISTING REMAINING WALLS MAY BE ABANDONED IN PLACE. REMOVE WIRING FROM CONDUIT.

D. RACEWAYS ASSOCIATED WITH ELECTRICAL BEING DEMOLISHED WHICH ARE EXPOSED SHALL BE REMOVED.

E. WHERE REMOVAL OF EQUIPMENT OR WIRING IS INDICATED, IT SHALL INCLUDE ALL ASSOCIATED WIRING BACK TO LAST ACTIVE REMAINING OUTLET, DEVICE, FIXTURE OR PANEL.

F. ELECTRICAL CONTRACTOR SHALL INSURE THAT ALL REMAINING ACTIVE CIRCUITS, DEVICES, OUTLETS, LIGHT FIXTURES, ETC. HAVE NOT BEEN DISCONNECTED OR MADE INOPERATIVE DURING DEMOLITION. ELECTRICAL CONTRACTOR SHALL RESTORE ALL INTERRUPTED OR DISCONNECTED CIRCUITS TO OPERATION.

G. ELECTRICAL CONTRACTOR SHALL REMOVE AND DISPOSE OF ALL REMOVED ELECTRICAL EQUIPMENT AND MATERIAL.

H. NO REMOVED EQUIPMENT OR MATERIAL SHALL BE REUSED AS PART OF NEW WORK, U.O.N.

I. EXISTING REMAINING CONCEALED RACEWAYS MAY BE REUSED FOR NEW WORK PROVIDED THEY MEET ALL REQUIREMENTS OF THE SPECIFICATION FOR NEW WORK.

J. EXISTING FLUSH OUTLETS MAY BE REUSED FOR NEW WORK PROVIDED THEY MEET ALL REQUIREMENTS OF THE SPECIFICATION FOR NEW WORK, MEET THE REQUIREMENTS OF THE CURRENT C.E.C. FOR VOLUME AND COINCIDE WITH LOCATION SHOWN FOR THE NEW WORK.

K. FLUSH OUTLET BOXES IN EXISTING WALLS TO REMAIN MAY BE ABANDONED IN PLACE. REMOVE DEVICES AND WIRING, PLUG OPENING AND PROVIDE AND INSTALL A BLANK DEVICE PLATE.

L. EXISTING WIRING SHOWN HAS BEEN TAKEN FROM OLD PLANS AND IS ASSUMED TO BE CORRECT. ELECTRICAL CONTRACTOR SHALL FIELD VERIFY ACTUAL CONDITIONS AND MAKE ADJUSTMENTS TO SUIT ACTUAL CONDITIONS AND TO MEET THE INTENT OF THE CONTRACT DOCUMENTS.

M. WHERE TELEPHONE, COMPUTER DATA, FIBER OPTICS, FIRE ALARM OR OTHER COMMUNICATIONS OUTLETS OR WIRING IS TO BE DEMOLISHED IT SHALL BE REMOVED BACK TO THE NEXT TERMINAL POINT. ELECTRICAL CONTRACTOR SHALL COORDINATE WITH OWNER OR HIS REPRESENTATIVE TO HAVE EQUIPMENT AND WIRING DESIGNATED FOR REMOVAL OR PRESERVATION PRIOR TO REMOVAL OF OUTLET BOXES, CONDUIT OR WIRING BY ELECTRICAL CONTRACTOR.

N. COORDINATE WITH OWNER PRIOR TO START OF DEMOLITION TO MINIMIZE POWER INTERRUPTIONS, WORK MAY HAVE TO OCCUR DURING NON-REGULAR BUSINESS HOURS. COORDINATE IN WRITING WITH OWNER ONE WEEK PRIOR TO PLANNED POWER INTERRUPTIONS.

JOB COPY
These plans must be kept on the job at all times.
CITY OF MORGAN HILL
BUILDING DIVISION

SCALE: 1/8"=1'-0"

NORTH

WESTON MILES
ARCHITECTS
17500 Depot Street, Suite #200
Morgan Hill, CA 95037
T •408 • 779 • 6686
• Architecture • Landscape •

REGISTERED PROFESSIONAL ENGINEER
No. C 18,552
RENEWAL 06-30-19
STATE OF CALIFORNIA

NOT VALID WITHOUT SIGNATURE

AURUM CONSULTING ENGINEERS MONTEREY BAY, INC.
Project No. 15168.01
60 Garden Court • Suite 210 • Monterey, CA 93940
T 831.648.3350 • F 831.648.3358 • www.aurumi.com

These drawings are instruments of service and are the property of AURUM CONSULTING ENGINEERS MONTEREY BAY, INC. The information on these drawings are for use on the specified project and shall not be used otherwise without the express written permission of AURUM CONSULTING ENGINEERS MONTEREY BAY, INC.

REGISTERED PROFESSIONAL ENGINEER
WILLIAM ANDREW KNOX
No. E 18,552
RENEW 06-30-19
ELECTRICAL
STATE OF CALIFORNIA

REVISIONS

1	03/28/2019 PLAN REVIEW #2
2	
3	

ELECTRICAL DEMOLITION PLAN

MORGAN HILL LIBRARY ADDITION

CITY OF MORGAN HILL
660 W. MAIN AVE, MORGAN HILL, CA 95037

These drawings are instruments of service and are the property of WESTON MILES ARCHITECTS, INC. The designs and other information on the drawings are for use on the specified project and shall not be used otherwise without the expressed written permission of WESTON MILES ARCHITECTS, INC.

Written dimensions on these drawings shall have precedence over scaled dimensions. Contractors shall verify and be responsible for all dimensions and conditions on the job and the office shall be notified of any variations from the dimensions and conditions shown by these drawings. Shop details shall be submitted to this office for approval before proceeding with fabrication.

© Copyrighted 2019

DATE: 02/8/2019

JOB NO: 15058

E3.1

JOB COPY
These plans must be kept on the job at all times.
CITY OF MORGAN HILL
BUILDING DIVISION

SCALE: 1/8"=1'-0"

NORTH

WESTON MILES
ARCHITECTS
17500 Depot Street, Suite #200
Morgan Hill, CA 95037
1 •408 • 779 • 6686
• Architecture • Landscape •

REGISTERED ARCHITECT
No. C 18,552
RENEWAL 08-31-20
STATE OF CALIFORNIA

NOT VALID WITHOUT SIGNATURE

AURUM CONSULTING ENGINEERS MONTEREY BAY, INC.
Project No. 18168.01
60 Garden Court • Suite 210 • Monterey, CA 93940
T 831.540.3330 • F 831.540.3339 • www.acemb.com

These drawings are instruments of service and are the property of AURUM CONSULTING ENGINEERS MONTEREY BAY, INC. All designs and other information on the drawings are for use on the specified project and shall not be used otherwise without the expressed written permission of AURUM CONSULTING ENGINEERS MONTEREY BAY, INC.

REGISTERED PROFESSIONAL ENGINEER
PHILLIP ANDREY
ELECTRICAL
STATE OF CALIFORNIA

REVISIONS

1	03/28/2019 PLAN REVIEW #2
2	
3	

POWER & SYSTEMS PLAN - PARTIAL BUILDING

MORGAN HILL LIBRARY ADDITION

CITY OF MORGAN HILL
660 W MAIN AVE, MORGAN HILL, CA 95037

These drawings are instruments of service and are the property of WESTON MILES ARCHITECTS, INC. All designs and other information on the drawings are for use on the specified project and shall not be used otherwise without the expressed written permission of WESTON MILES ARCHITECTS, INC.

Written dimensions on these drawings shall have precedence over scaled dimensions. Contractors shall verify and be responsible for all dimensions and conditions on the job and this office shall be notified of any variations from the dimensions and conditions shown on these drawings. Shop details shall be submitted to this office for approval before proceeding with fabrication.

© Copyrighted 2019

DATE: 02/8/2019

JOB NO.: 15058

E4.1

SHEET NOTES

1. ALL POWER RECEPTACLES IN THIS AREA SHALL BE TAMPER RESISTANT.
2. POWER FOR MOTORIZED SHADES, 120V. PROVIDE AND INSTALL ¾" CONDUIT AND BOXES FOR CONTROLS. COORDINATE WITH ARCHITECT FOR EXACT LOCATION OF CONTROLS.
3. PROVIDE AND INSTALL WEATHERPROOF "IN-USE" METAL COVER, TAYMAC OR EQUAL. GROUND AND BOND METAL COVER PER NEC.
4. POWER AND DATA FOR CEILING MOUNTED PROJECTOR. MOUNT POWER RECEPTACLE ON CEILING.
5. POWER AND DATA FOR WALL MOUNTED TV. COORDINATE WITH ARCHITECTURAL ELEVATIONS FOR EXACT MOUNTING HEIGHT PRIOR TO ROUGH IN.
6. RECEPTACLE FOR IDF, 120V. FIELD VERIFY EXACT LOCATION WITH ARCHITECT.
7. PROJECTOR SCREEN, 120V. PROVIDE AND INSTALL 1"C.O. AND BOXES TO CONTROL STATION. COORDINATE WITH ARCHITECT FOR CONTROL STATION LOCATION.
8. PROVIDE AND INSTALL JUNCTION BOX ONLY FOR AV CABLING AND STUB 1 ¼"C.O. ABOVE ACCESSIBLE CEILING SPACE.
9. LOCATE JUNCTION BOX FOR AV CABLING ABOVE ACCESSIBLE CEILING.
10. LOCATE FOR WIRELESS ACCESS POINT.
11. DRAIN PUMP, 4.5A, 120V. COORDINATE EXACT LOCATION WITH MECHANICAL DRAWINGS.
12. POWER FOR FUTURE MOTORIZED SHADES, 120V. COIL 5 FEET OF CONDUCTORS IN PULLCAN AND CAP.
13. SPACE RESERVED FOR FUTURE PHOTOVOLTAIC SYSTEM INVERTER.
14. CONDUIT ONLY FOR FUTURE PHOTOVOLTAIC SYSTEM, SEE E4.3 FOR CONTINUATION.

1

BRANCH CIRCUIT CONDUCTOR SIZING TABLE

CIRCUIT AMPACITY/VOLTAGE	CIRCUIT LENGTH	REQUIREMENT
20/120	56'-90'	½" C., 2 #10 & 1 #10 GND.
20/120	91'-140'	½" C., 2 #8 & 1 #10 GND.
20/277	131'-205'	½" C., 2 #10 & 1 #10 GND.
20/277	206'-330'	½" C., 2 #8 & 1 #10 GND.

NOTE:
CONTRACTOR SHALL SIZE BRANCH CIRCUIT CONDUCTORS PER THE TABLE ABOVE AS DETERMINED BY THE CIRCUIT CONDUCTOR LENGTH, U.O.N. CONTRACTOR SHALL SPLICE TO #12 AWG WITHIN TERMINATION BOX FOR DEVICE CONNECTION IF NECESSARY.

GENERAL NOTES:

A. WHERE NEW ELECTRICAL DEVICES/CONDUITS ARE INSTALLED ALONG EXISTING WALLS. CONTRACTOR SHALL CUT AND PATCH TO MATCH EXISTING WALL/CEILING FINISH.

B. CONTRACTOR SHALL LABEL ALL ELECTRICAL DEVICES WITH ASSOCIATED CIRCUIT NUMBER AND PANEL NAME.

C. PANELS MUST BE IDENTIFIED FROM WHERE IT IS FED AND WHERE IT SUB-FEEDS ON THE SAME NAME PANEL ID NAME PLATE.

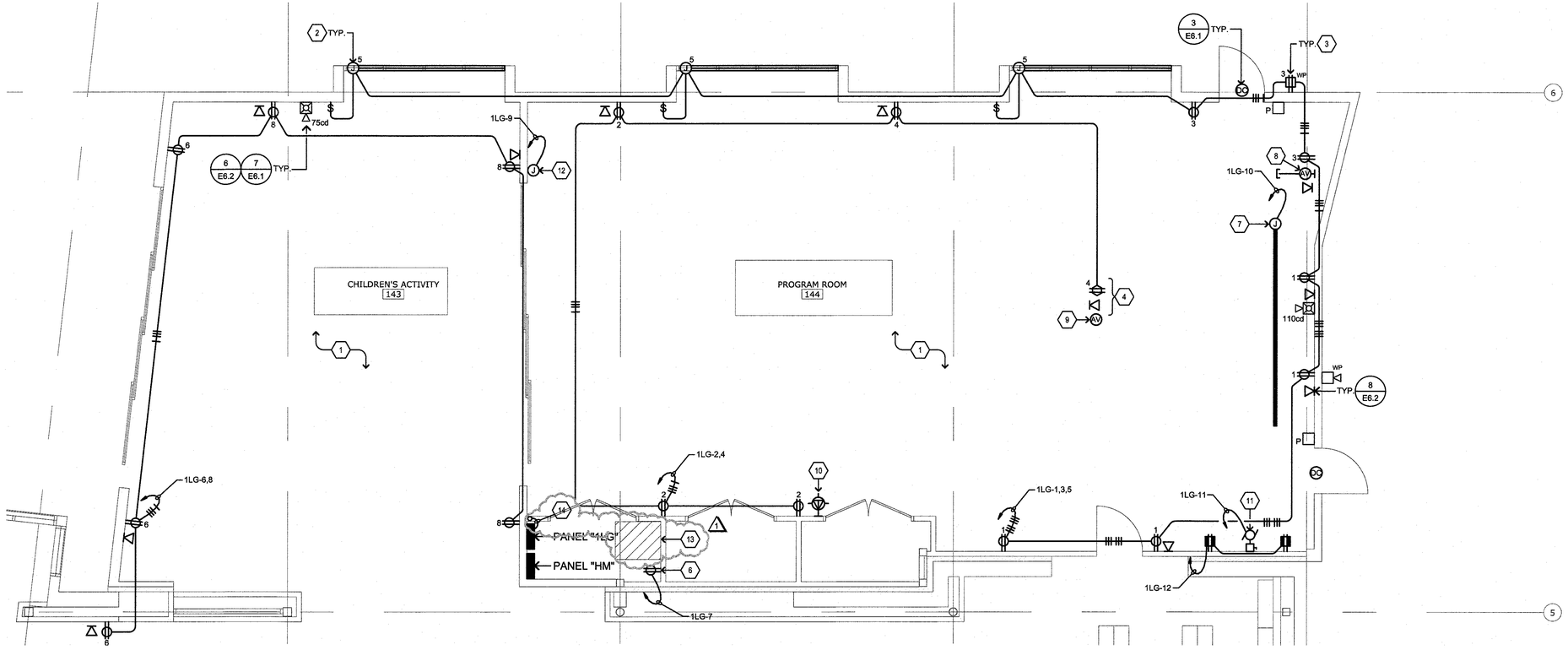

JOB COPY
These plans must be kept on the job at all times.
CITY OF MORGAN HILL
BUILDING DIVISION

SCALE: 1/4"=1'-0"

NORTH

WESTON MILES
ARCHITECTS
17500 Depot Street, Suite #200
Morgan Hill, CA 95037
T 408 • 779 • 6686
Architecture • Landscape

LICENSED ARCHITECT
No. C 18,552
RENEWAL 08-31-20
STATE OF CALIFORNIA

NOT VALID WITHOUT SIGNATURE

AURUM CONSULTING ENGINEERS MONTEREY BAY, INC.
Project No. 18163.01
60 Garden Court • Suite 210 • Monterey, CA 93940
T.831.646.3330 • F.831.646.3336 • www.acemb.com

These drawings are instruments of service and are the property of AURUM CONSULTING ENGINEERS MONTEREY BAY, INC. All designs and other information in the drawings are for use on the specified project and shall not be used otherwise without the expressed written permission of AURUM CONSULTING ENGINEERS MONTEREY BAY, INC.

REGISTERED PROFESSIONAL ENGINEER
ELECTRICAL
STATE OF CALIFORNIA

REVISIONS

1 03/28/2019 PLAN REVIEW #2

2

3

POWER & SYSTEMS PLAN - NORTH EAST

MORGAN HILL LIBRARY ADDITION

CITY OF MORGAN HILL
660 W MAIN AVE, MORGAN HILL, CA 95037

These drawings are instruments of service and are the property of WESTON MILES ARCHITECTS, INC. All designs and other information on the drawings are for use on the specified project and shall not be used otherwise without the expressed written permission of WESTON MILES ARCHITECTS, INC.

Written dimensions on these drawings shall have precedence over scaled dimensions. Contractors shall verify and be responsible for all dimensions and conditions on the job and this office shall be notified of any variations from the dimensions and conditions shown on these drawings. Shop details shall be submitted to this office for approval before proceeding with fabrication.

© Copyrighted 2019

DATE: 02/8/2019

JOB NO: 15058

E4.2

JOB COPY
These plans must be kept on the job at all times.
CITY OF MORGAN HILL
BUILDING DIVISION

SHEET NOTES

1. PROVIDE AND INSTALL METAL WEATHERPROOF "IN-USE" COVER, TAYMAC OR EQUAL.
2. LOCATE WITHIN 25' OF AC UNIT.
3. 23 MCA, 480V, 3Ø.
4. 21 MCA, 480V, 3Ø.
5. ¾"C., 3 #10 & 1 #10 GND.
6. CONTRACTOR SHALL CUTOUT CEILING TO ROUTE ELECTRICAL FEEDERS; SEAL PENETRATION WATERTIGHT.
7. ELECTRICAL FEEDER FOR PANEL "HM" AND "1LG" FROM "MSB" LOCATED IN ELECTRICAL ROOM; SEE E1.1 FOR SIZE AND REQUIREMENTS.
8. CONTRACTOR SHALL CUTOUT CEILING TO ROUTE CONDUIT FOR DATA; SEAL PENETRATION WATERTIGHT. STUB 2"C.O. FOR DATA INTO TELECOM ROOM.
9. 2"C.O. FOR DATA.
10. TERMINATE ELECTRICAL FEEDERS AT PANELS "HM" AND "1LG" LOCATED INSIDE BUILDING; SEE SHEET E4.2.
11. STUB 2"C.O. FOR DATA INTO BUILDING; LOCATE NEAR NEW IDF LOCATION. 1
12. STUB 1 ½"C.O. FOR FUTURE SOLAR PV SYSTEM. SEE E4.2 FOR CONTINUATION.

GENERAL NOTES:

A. CONTRACTOR SHALL LABEL ALL ELECTRICAL DEVICES WITH ASSOCIATED CIRCUIT NUMBER AND PANEL NAME.

B. PANELS MUST BE IDENTIFIED FROM WHERE IT IS FED AND WHERE IT SUB-FEEDS ON THE SAME NAME PANEL ID NAME PLATE.

C. CONTRACTOR SHALL ENSURE THAT ALL ROOF PENETRATIONS ARE SEALED WEATHERTIGHT.

8' 0' 2' 4' 6' 8'
SCALE: 1/8"=1'-0"

NORTH

WESTON MILES
ARCHITECTS
17500 Depot Street, Suite #200
Morgan Hill, CA 95037
1 •408 • 779 • 6686
• Architecture • Landscape •

REGISTERED ARCHITECT
No. C 18,552
EXPIRAL 08-31-20
STATE OF CALIFORNIA

NOT VALID WITHOUT SIGNATURE

AURUM CONSULTING ENGINEERS
MONTEREY BAY, INC.
Project No. M183.01
60 Garden Court • Suite 270 • Monterey, CA 93940
T 831.646.3330 • F 831.646.3336 • www.acemb.com

These drawings are instruments of service and are the property of AURUM CONSULTING ENGINEERS MONTEREY BAY, INC. All designs and other information on the drawings are for use on the specified project and shall not be used otherwise without the expressed written permission of AURUM CONSULTING ENGINEERS MONTEREY BAY, INC.

REGISTERED PROFESSIONAL ENGINEER
WILLIAM HANDREY
No. E 18,552
EXP. 12-31-19
ELECTRICAL
STATE OF CALIFORNIA

REVISIONS
1 03/28/2019 PLAN REVIEW #2
2
3

POWER & SYSTEMS PLAN - ROOF

MORGAN HILL LIBRARY ADDITION

CITY OF MORGAN HILL
660 W MAIN AVE, MORGAN HILL, CA 95037

These drawings are instruments of service and are the property of WESTON MILES ARCHITECTS, INC. All designs and other information on the drawings are for use on the specified project and shall not be used otherwise without the expressed written permission of WESTON MILES ARCHITECTS, INC.

Written dimensions on these drawings shall have precedence over scaled dimensions. Contractors shall verify and be responsible for all dimensions and conditions on the job and this office shall be notified of any variations from the dimensions and conditions shown by these drawings. Shop drawings must be submitted to this office for approval before proceeding with fabrication.

© Copyrighted 2019

DATE: 02/8/2019

JOB NO.: 15058

E4.3

DAYLIT ZONES LEGEND

- PRIMARY DAYLIT ZONE
- SECONDARY DAYLIT ZONE

A. GENERAL NOTES:

B. SEE SHEET E6.2 FOR LIGHTING CONTROLS AND SEQUENCE OF OPERATION.

C. ALL NEW EXTERIOR LIGHT FIXTURES SHALL BE CONTROLLED VIA EXTERIOR LIGHTING CONTROL PANEL "LCP3" AND LOW VOLTAGE SWITCH "T1" AND POWERED FROM EXISTING BRANCH CIRCUIT (PANEL E, CIRCUIT 1).

D. WHERE NEW ELECTRICAL DEVICES/CONDUITS ARE INSTALLED ALONG EXISTING WALLS. CONTRACTOR SHALL CUT AND PATCH TO MATCH EXISTING WALL/CEILING FINISH.

E. CONTRACTOR SHALL LABEL ALL ELECTRICAL DEVICES WITH ASSOCIATED CIRCUIT NUMBER AND PANEL NAME.

F. PANELS MUST BE IDENTIFIED FROM WHERE IT IS FED AND WHERE IT SUB-FEEDS ON THE SAME NAME PANEL ID NAME PLATE.

G. FOR ALL SUSPENDED/PENDANT LIGHTING FIXTURES, CONTRACTOR SHALL COORDINATE WITH ARCHITECTURAL DRAWINGS FOR EXACT MOUNTING HEIGHT AND CABLE LENGTH.

H. THE EMERGENCY LIGHTING FACILITIES PROVIDE INITIAL ILLUMINATION THAT IS AT LEAST AN AVERAGE OF 1 FOOT-CANDLE AND MINIMUM AT ANY POINT OF 0.1 FOOT-CANDLE MEASURED ALONG THE PATH OF EGRESS AT FLOOR LEVEL (CBC 1008.3.5). 1

I. EXIT SIGNS , EMERGENCY LIGHTS AND LIGHT FIXTURES WITH EMERGENCY BATTERY BACK-UP SHALL SUPPLY A MINIMUM DURATION OF 90 MINUTES OF POWER IN THE EVENT OF A POWER OUTAGE/FAILURE.

SHEET NOTES

1. CONNECT TO AN UNSWITCHED HOT.
2. CONNECT TO NEAREST EXISTING EXTERIOR LIGHTING CIRCUIT.
3. CONTRACTOR SHALL BRING AN UNSWITCHED HOT FROM SAME 277V CIRCUIT OR SOURCE AND CONNECT TO LIGHT FIXTURE WITH EMERGENCY BATTERY BACK-UP; FIELD VERIFY.
4. CONNECT VIA "LCP3"; SEE SHEET E4.1.
5. MOUNT AT 10'-0" A.F.F. TO BOTTOM OF FIXTURE; FIELD VERIFY CABLE LENGTH .
6. CONTRACTOR SHALL COORDINATE WITH ARCHITECTURAL ELEVATION DRAWINGS FOR EXACT MOUNTING HEIGHT.
7. NEW DATA LINE VOLTAGE SWITCH; CONTRACTOR SHALL CONNECT LOW VOLTAGE WIRING VIA 1"C. TO NEAREST EXISTING LOW VOLTAGE SWITCH; SEE 5/E6.2.
8. MOUNT AT 8'-0" A.F.F. TO BOTTOM OF FIXTURE; FIELD VERIFY CABLE LENGTH.
9. CONTRACTOR SHALL CLEAN, RELAMP AND REINSTALL PENDANT FIXTURE SALVAGED FROM DEMOLITION WORK.
10. LOCATE ABOVE ACCESSIBLE CEILING SPACE.
11. PRIMARY DAYLIT ZONE IS LESS THAN 120WATTS. DAYLIGHTING SENSORS AT THIS LOCATION IS EXEMPT FROM T24 ENERGY CODE REQUIREMENTS.

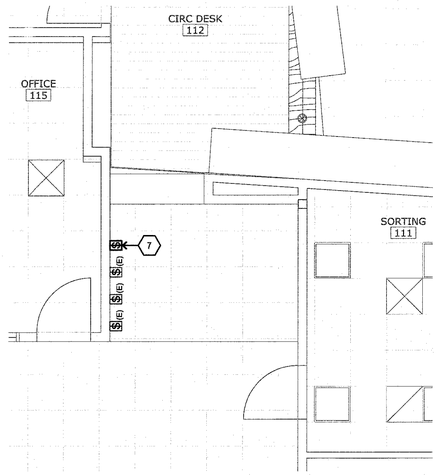

2 LIGHTING PLAN

SCALE: 1/4"=1'-0"

4' 0' 1' 2' 3' 4'

NORTH

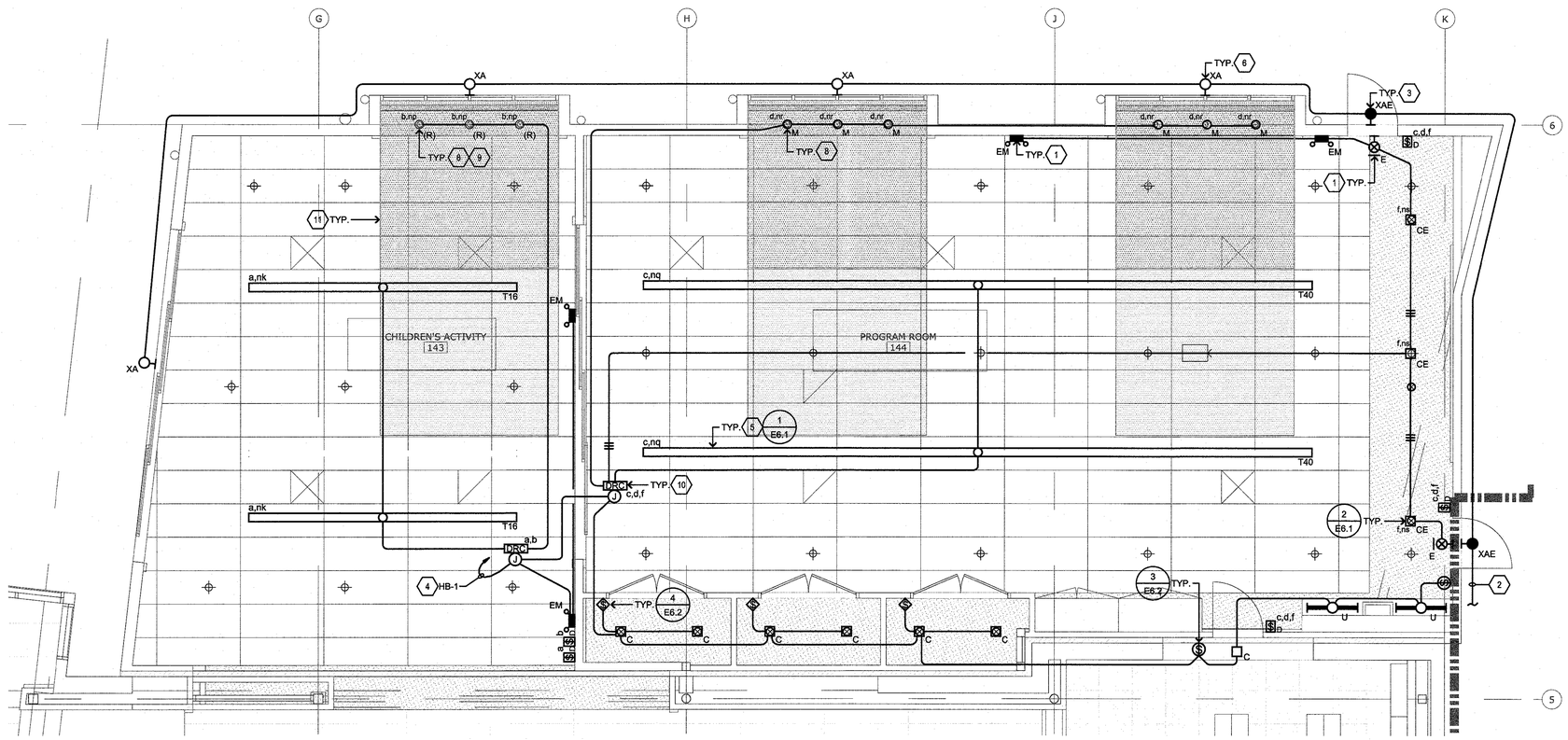

1 LIGHTING PLAN - NORTH EAST

SCALE: 1/4"=1'-0"

4' 0' 1' 2' 3' 4'

NORTH

JOB COPY

These plans must be kept on the job at all times.

CITY OF MORGAN HILL
BUILDING DIVISION

WESTON MILES
ARCHITECTS
17500 Depot Street, Suite #200
Morgan Hill, CA 95037
1 •408 • 779 • 6686
Architecture • Landscape

REGISTERED ARCHITECT DOUGLAS A. WESTON No. C 18,552 RENEWAL 08-31-19 STATE OF CALIFORNIA

NOT VALID WITHOUT SIGNATURE

AURUM CONSULTING ENGINEERS MONTEREY BAY, INC.
Project No. 16183.01
60 Garden Court • Suite 210 • Monterey, CA 93940
T 831.646.3330 • F 831.646.3336 • www.acemb.com

These drawings are instruments of service and are the property of AURUM CONSULTING ENGINEERS MONTEREY BAY, INC. All designs and other information on the drawings are for use on the specified project and shall not be used otherwise without the expressed written permission of AURUM CONSULTING ENGINEERS MONTEREY BAY, INC.

REGISTERED PROFESSIONAL ENGINEER WILLIAM HANDREY No. E 18,552 ELECTRICAL STATE OF CALIFORNIA

REVISIONS

1 03/28/2019 PLAN REVIEW #2

2

3

LIGHTING PLAN - NORTH EAST

MORGAN HILL LIBRARY ADDITION

CITY OF MORGAN HILL
660 W MAIN AVE, MORGAN HILL, CA 95037

These drawings are instruments of service and are the property of WESTON MILES ARCHITECTS, INC. All designs and other information on the drawings are for use on the specified project and shall not be used otherwise without the expressed written permission of WESTON MILES ARCHITECTS, INC.

Written dimensions on these drawings shall have precedence over scaled dimensions. Contractors shall verify and be responsible for all dimensions and conditions on the job and WESTON MILES ARCHITECTS, INC. must be informed of any dimensions and conditions shown by these drawings. Shop details shall be submitted to this office for approval before proceeding with fabrication.

© Copyrighted 2019

DATE: 02/8/2019

JOB NO: 15058

E5.1

RATED PENETRATIONS SHOWN ARE FOR USE WHERE THE PROJECT WALL OR/AND FLOOR CONSTRUCTION CORRESPONDS TO ANY SHOWN IN DETAILS 4 THROUGH 6 BELOW

SCOPE OF WORK:

ADDITIONAL OF NEW FIRE ALARM DEVICES TO EXISTING ADDRESSABLE FIRE ALARM SYSTEM INCLUDING ALL REQUIRED EQUIPMENT, PANELS, RACEWAYS, CONDUCTORS, CONNECTIONS, PROGRAMMING, TESTING AND APPROVAL BY THE LOCAL AUTHORITY HAVING JURISDICTION.

SEQUENCE OF OPERATION OF THE FIRE ALARM SYSTEM.

A. ACTIVATION OF ANY INITIATING DEVICE SHALL CAUSE ALL SIGNALS IN BUILDING TO ACTIVATE AND SOUND AND SIMULTANEOUSLY CAUSE AN ALARM TO BE SENT TO THE REMOTE MONITORING AGENCY.

B. THE ADDRESS CORRESPONDING TO THE INITIATION DEVICE IN ALARM SHALL APPEAR ON FIRE ALARM CONTROL PANEL LCD SCREEN.

C. CLOSING THE FIRE ALARM SPRINKLER OS & Y VALVE SHALL INITIATE A TROUBLE INDICATION AT FIRE ALARM CONTROL PANEL AND MONITORING STATION.

D. SHOULD AN OPEN, GROUND OR SHORT OCCUR IN THE WIRING SYSTEM, FIRE ALARM CONTROL PANEL WILL DETECT MALFUNCTION AND INITIATE A TROUBLE ALARM INDICATOR AT PANEL AND MONITORING STATION.

E. ONCE THE SYSTEM IS BACK TO NORMAL. THE PANEL WILL RESOUND FOR PROPER RESETTING.

FIRE ALARM NOTES:

1. EXISTING ADDRESSABLE FIRE ALARM CONTROL PANEL WITH COMMUNICATOR, INITIATING AND ANNUNCIATING DEVICES, CHARGER & BATTERIES.
2. THE CONTRACTOR SHALL PROVIDE AND INSTALL ALL MATERIALS, EQUIPMENT AND PROVIDE ALL LABOR REQUIRED AND NECESSARY TO COMPLETE THE WORK SHOWN ON THE DRAWINGS.
3. THE FIRE ALARM SYSTEM SHALL BE INSTALLED AS SPECIFIED IN ALL SECTIONS OF DIVISION 16 AND DIVISION 15, INCLUDING ALL OTHER WORK AND MISCELLANEOUS ITEMS NOT SPECIFICALLY MENTIONED BUT REASONABLY INFERRED FOR COMPLETE INSTALLATION.
4. ALL WIRE SHALL BE MINIMUM #12AWG FOR ANNUNCIATION CIRCUITS AND MINIMUM #16AWG TWISTED SHIELDED PAIR CABLE FOR INITIATING CIRCUITS. ALL WIRING SHALL BE ROUTED CONCEALED [INSTALLED IN CONDUIT].
5. SUBMIT COMPLETE FIRE ALARM SYSTEM PLANS INCLUDING RISER DIAGRAMS, BATTERY CALCS, VOLT DROP CALCS, WIRING DIAGRAMS, ETC. TO LOCAL FIRE AUTHORITY REVIEW AND APPROVAL PRIOR TO START OF INSTALLATION.
6. FINAL CONNECTIONS OF DEVICES AND EQUIPMENT SHALL BE BY A FIRE ALARM CONTRACTOR WHO PERFORMS SUCH WORK ON A REGULAR BASIS.
7. FINAL TESTING SHALL BE WITNESSED BY THE LOCAL FIRE AGENCY.
8. PROVIDE MANUALS AND MINIMUM 2-HOURS OPERATING INSTRUCTION TO OWNER.
9. PROVIDE BATTERY BACKUP FOR 24 HOURS OF STANDBY & 5 MINUTES OF ALARM.
10. VERIFY COLOR (RED OR WHITE) OF NOTIFICATION APPLIANCES WITH ARCHITECT.

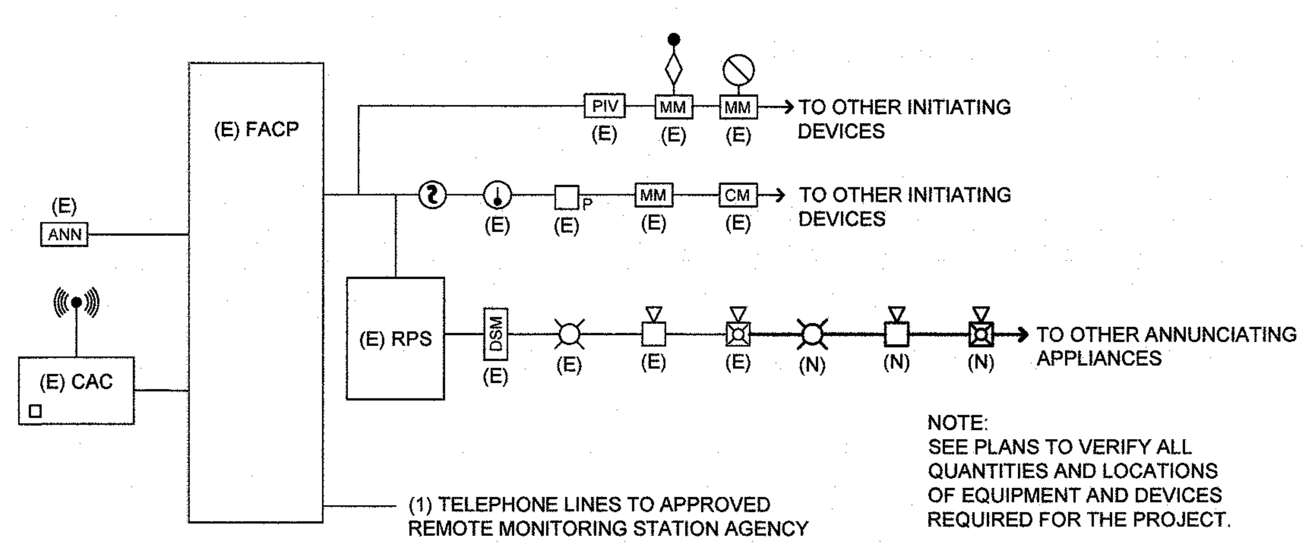

NOTE:
SEE PLANS TO VERIFY ALL QUANTITIES AND LOCATIONS OF EQUIPMENT AND DEVICES REQUIRED FOR THE PROJECT.

7 TYPICAL FIRE ALARM RISER DIAGRAM

NO SCALE

SEE FLOOR PLAN DRAWINGS FOR RATED WALL LOCATIONS

U.L. System No. W-L-1049

F Rating-1 and 2 Hr (See Item 1B)
T Rating-0 HR
L Rating At Ambient-Less Than 1 CFM/sq ft
L Rating At 400F-Less Than 1 CFM/sq ft

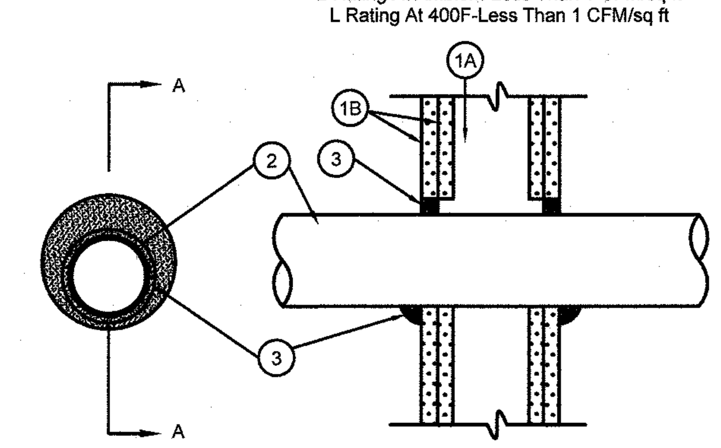

SECTION A-A

1. Wall Assembly-The 1 or 2 hr fire-rated gypsum wallboard/stud wall assembly shall be constructed of the materials and in the manner described in the individual U300 or U400 Series Wall or Partition Design in the UL Fire Resistance Directory and shall include the following construction features:

A. Studs-Wall framing may consist of either wood studs or steel channel studs. Wood studs to consist of nom 2 by 4 in. lumber spaced 16 in. OC. Steel studs to be min 3-5/8 in. wide and spaced max 24 in. OC. When steel studs are used and the diam of opening exceeds the width of stud cavity, the opening shall be framed on all sides using lengths of steel stud installed between the vertical studs and screw-attached to the steel studs at each end. The framed opening in the wall shall be 4 to 6 in. wider and 4 to 6 in. higher than the diam of the penetrating item such that, when the penetrating item is installed in the opening, a 2 to 3 in. clearance is present between the penetrating item and the framing on all four sides.

B. Wallboard, Gypsum*-5/8 in. thick, 4 ft wide with square or tapered edges. The gypsum wallboard type, thickness, number of layers, fastener type and sheet orientation shall be as specified in the individual U300 or U400 Series Design in the UL Fire Resistance Directory. Max diam of opening is 25-3/4 in. for steel stud walls. Max diam of opening is 14-1/2 in. for wood stud walls.
The hourly F Rating of the firestop system is equal to the hourly fire rating of the wall assembly in which it is installed.

2. Through Penetrant-One metallic pipe, conduit or tubing to be installed either concentrically or eccentrically within the firestop system. The annular space between pipe, conduit or tubing and periphery of opening shall be min 0 in. (point contact) to max 1-3/4 in. Pipe, conduit or tubing to be rigidly supported on both sides of wall assembly. The following types and sizes of metallic pipes, conduits or tubing may be used:

A. Steel Pipe-Nom 24 in. diam (or smaller) Schedule 10 (or heavier) steel pipe.

B. Iron Pipe-Nom 24 in. diam (or smaller) cast or ductile iron pipe.

C. Conduit-Nom 4 in. diam (or smaller) steel electrical metallic tubing, nom 6 in. diam (or smaller) steel conduit or nom I in. diam (or smaller) flexible steel conduit.

D. Copper Tubing-Nom 6 in. diam (or smaller) Type L (or heavier) copper tubing.

E. Copper Pipe-Nom 6 in. diam (or smaller) Regular (or heavier) copper pipe.

3. Fill, Void or Cavity Material*-Sealant-Min 5/8 in. thickness of fill
material applied within annulus, flush with both surfaces of wall. At the point contact location between through penetrant and gypsum
wallboard, a min 3/8 in. diam bead of fill material shall be applied at the gypsum wallboard/through penetrant interface on both surfaces of wall.

Specified Technologies Inc.-SpecSeal 100, 101, 102 or 105 Sealant
'Bearing the UL Classification Marking

5 2-HR FIRE-RATEED WALL PENETRATION

NO SCALE

SEE FLOOR PLAN DRAWINGS FOR RATED WALL LOCATIONS

U.L. System No. W-L-1062

F Rating-1 HR
T Rating-0 HR
L Rating At Ambient-Less Than 1 CFM/sq ft
L Rating At 400F-Less Than 1 CFM/sq ft

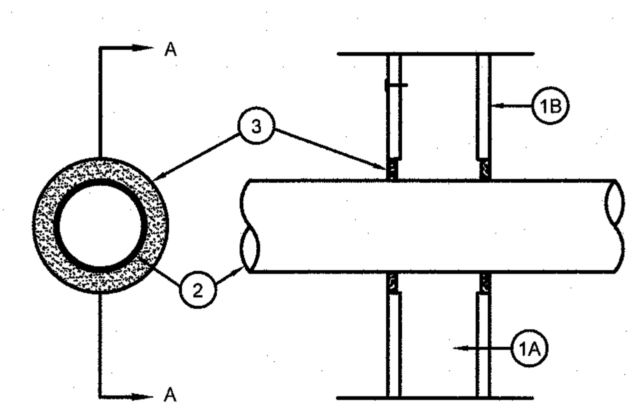

SECTION A-A

1. Wall Assembly-The fire-rated gypsum wallboard/stud wall assembly shall be constructed of the materials and in the manner specified in the individual U300 or U400 Series Wall and Partition Designs in the UL Fire Resistance Directory and shall include the following construction features:

A. Studs-Wall framing may consist of either wood studs or steel channel studs. Wood studs to consist of nom 2 by 4 in. lumber spaced 16 in OC. Steel studs to be min 3 5/8 in. wide and spaced max 24 in. OC.

B. Wallboard Gypsum*-One Layer of nom 5/8 in. thick gypsum wallboard as specified in the individual Wall and Partition Design. Max diam of opening is 4 3/4 in.

2. Through Penetrants-One metallic conduit to be installed within the firestop system. The space between the conduit and periphery of opening shall be a min 1/4 in. to a max |Q3|W/|A8|S in. Conduit to be rigidly supported on both sides of wall assembly. A nominal 4 in. diameter (or smaller) electrical metallic tubing or steel conduit may be used.

3. Fill, Void or Cavity Material*-Caulk-Min 1 1/2 in. thickness of fill material applied within the annulus, flush with both surfaces of wall.

General Electric Co.-Pensit 100 Caulk.

Specified Technologies Inc.-Pensil 100 Sealant and Pensit 300 Sealant.

*Bearing the UL Classification Marking

6 1-HR FIRE-RATED WALL PENETRATION

NO SCALE

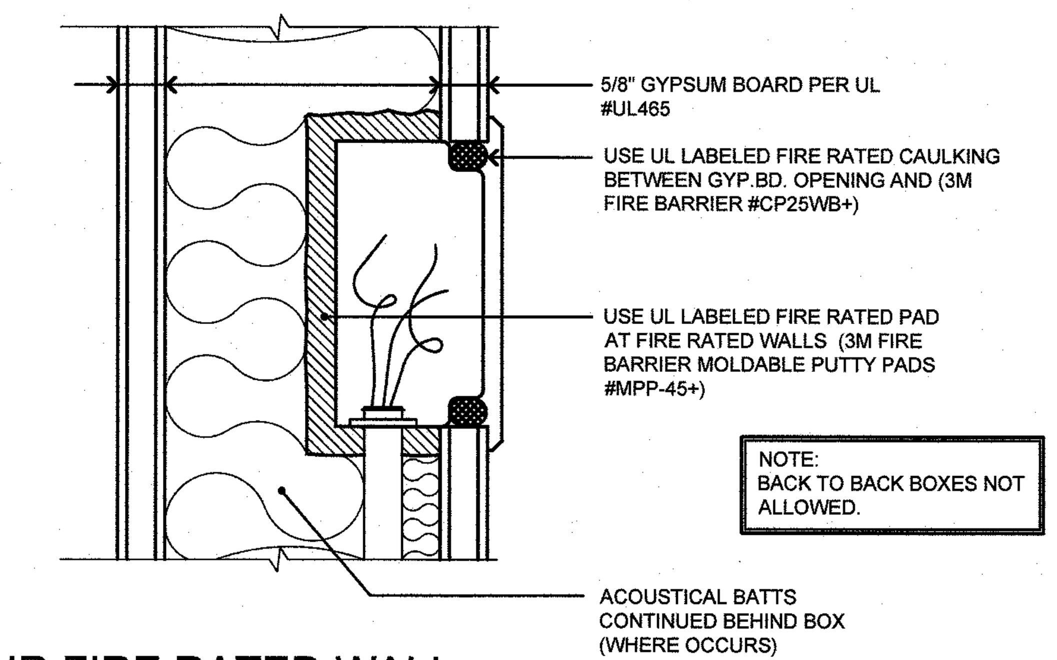

4 1-HR FIRE RATED WALL ELECTRICAL OUTLET BOX CAULKING (TYP.)

NO SCALE

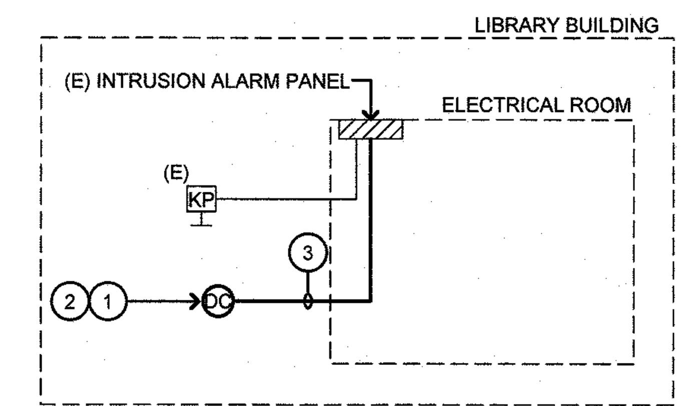

DETAIL NOTES:

1. SEE PLAN FOR QUANTITIES AND LOCATIONS. SECURITY KEY PADS AND MOTION SENSORS. WIRING TO BE INSTALLED BY INTRUSION ALARM CONTRACTOR.
2. ELECTRICAL CONTRACTOR SHALL INSTALL JUNCTION BOX FOR EACH DEVICE WHERE NOTED ON PLANS.
3. CONTRACTOR SHALL PROVIDE & INSTALL ¾" CONDUIT TO EACH DEVICE.

3 INTRUSION ALARM RISER DIAGRAM

NO SCALE

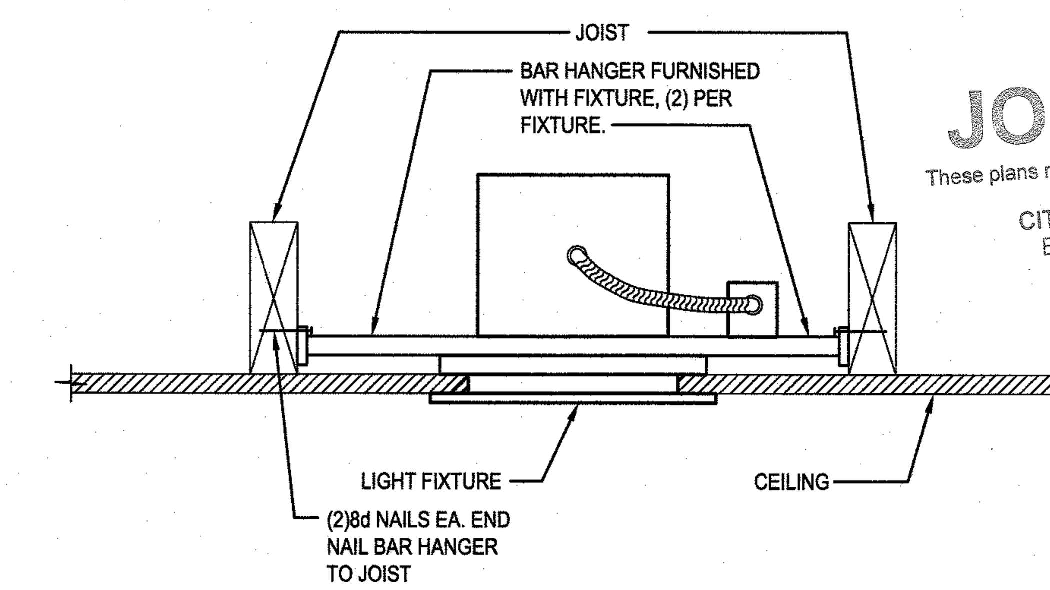

RECESSED FIXTURE IN GYP. BOARD CEILING

2 FIXTURE MOUNTING DETAIL

NO SCALE

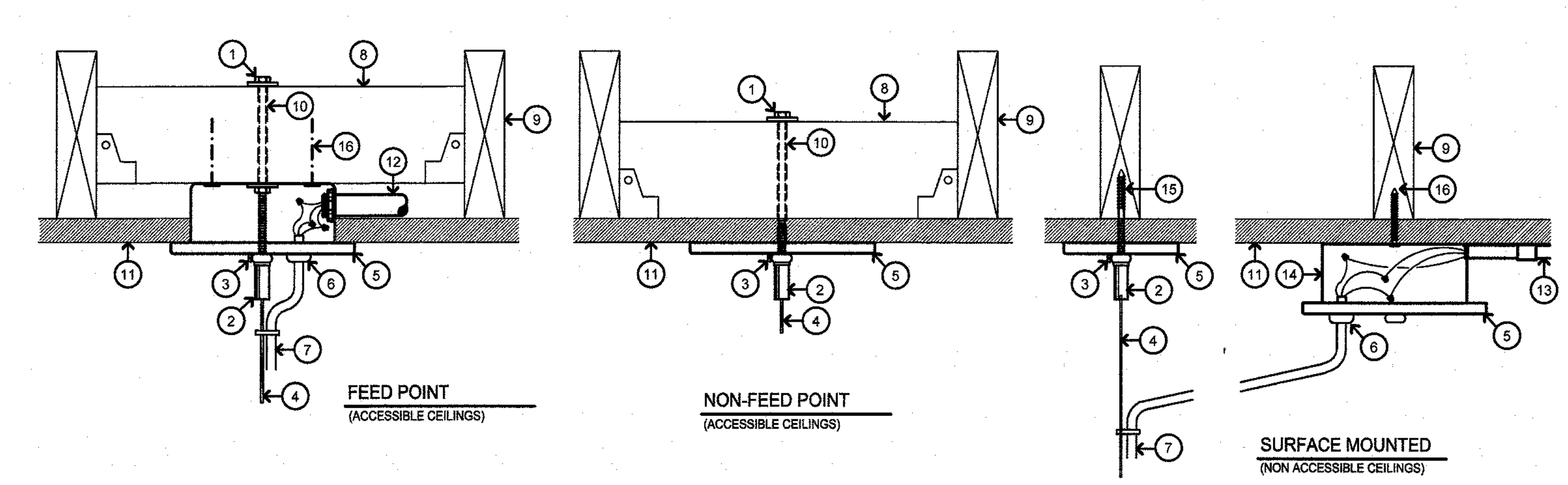

DETAIL NOTES

1. 1/4" x 20 THREADED BOLT, LENGTH AS REQUIRED.
2. 1/4" x 20 THREADED CABLE RETAINER BY MFGR.
3. SLIP RING AND SET SCREW BY MFGR.
4. 3/32" DIA. AIRCRAFT SAFETY CABLE BY MFGR., SECURE TO FIXT. SEE LIGHTING PLANS FOR QUANTITY AND LOCATION.
5. CANOPY BY MFGR.
6. STRAIN RELIEF BY MFGR.
7. SJT CORD BY MFGR.
8. 2' x 4' BLOCKING WITH SIMPSON U24 JOIST HANGER AT EACH END.
9. 2" x _ FRAMING.
10. PRE-DRILL BLOCKING TO AVOID SPLITTING.
11. HARD CAP CEILING.
12. CONDUIT, SEE DWGS. FOR SIZE.
13. SURFACE MTD. METALLIC RACEWAY WIREMOLD OR EQUAL. COLOR PER ARCH. SEE DWGS. FOR SIZE.
14. SURFACE MTD. SHALLOW J-BOX, WIREMOLD OR EQUAL, COLOR BY ARCH.
15. 1/4" x 20 THREADED HANGER BOLT FOR WOOD CEILINGS. 1 1/2" MINIMUM PENETRATION.
16. (2) #10 WOOD SCREWS WITH 1 1/2" MINIMUM PENETRATION.

1 PENDANT MOUNTING DETAIL

NO SCALE

WESTON MILES ARCHITECTS
17500 Depot Street, Suite #200
Morgan Hill, CA 95037
1 •408 • 779 • 6686
• Architecture • Landscape •

LICENSED ARCHITECT CHARLES D. WESTON No. C 18,552 RENEWAL 08-31-19 STATE OF CALIFORNIA
NOT VALID WITHOUT SIGNATURE

AURUM CONSULTING ENGINEERS MONTEREY BAY, INC.
Project No. 16163.01
60 Garden Court • Suite 210 • Monterey, CA 93940
T.831.646.3330 • F.831.646.3336 • www.acemb.com

These drawings are instruments of service and are the property of AURUM CONSULTING ENGINEERS MONTEREY BAY, INC. All designs and other information in the drawings are for use on the specified project and shall not be used otherwise without the expressed written permission of AURUM CONSULTING ENGINEERS MONTEREY BAY, INC.

REGISTERED PROFESSIONAL ENGINEER ... ELECTRICAL STATE OF CALIFORNIA

REVISIONS

1 03/28/2019 PLAN REVIEW #2

2

3

JOB COPY
These plans must be kept on the job at all times.
CITY OF MORGAN HILL
BUILDING DIVISION

ELECTRICAL DETAILS

MORGAN HILL LIBRARY ADDITION

CITY OF MORGAN HILL
660 W MAIN AVE, MORGAN HILL, CA 95037

These drawings are instruments of service and are the property of WESTON MILES ARCHITECTS, INC. All designs and other information on the drawings are for use on the specified project and shall not be used otherwise without the expressed written permission of WESTON MILES ARCHITECTS, INC.

Written dimensions on these drawings shall have precedence over scaled dimensions. Contractors shall verify and be responsible for all dimensions and conditions on the job and this office shall be notified of any variations from the dimensions and conditions shown by these drawings. Shop details shall be submitted to this office for approval before proceeding with fabrication.

© Copyrighted 2019

DATE: 02/8/2019

JOB NO: 15058

E6.1

DETAIL NOTES:

1. PULLBOX; SEE DRAWINGS FOR TYPE AND SIZE.
2. ROOF STRUCTURE.
3. CONDUIT; SEE DRAWINGS FOR SIZE.
4. UNISTRUT SHALL COVER ALL MOUNTING HOLES.
5. CONDUIT CLAMPS.
6. EXISTING PARAPET WALL.

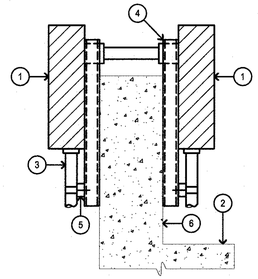

10 PULLBOX MOUNTED ON PARAPET WALL

NO SCALE

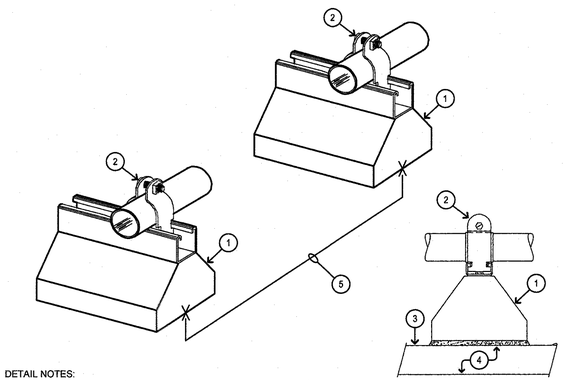

DETAIL NOTES:

1. ROOF TOP CONDUIT SUPPORT; 5" x 6" x 9.5" WITH 1" HIGH 14 GA. GALVANIZED CHANNEL STRUT. COOPER B-LINE "DB" SERIES.
2. 14 GA. RIGID CONDUIT CLAMP WITH RECESS HEX HEAD MACHINE SCREW AND SQUARE NUT COMBINATION. COPPER B-LINE B200 SERIES.
3. CLEAN (E) ROOF AREA AS REQUIRED.
4. ROOF STRUCTURE.
5. PROVIDE AND INSTALL CONDUIT SUPPORT PER CEC REQUIREMENTS.

9 ROOF MOUNTED CONDUIT SUPPORT DETAIL

NO SCALE

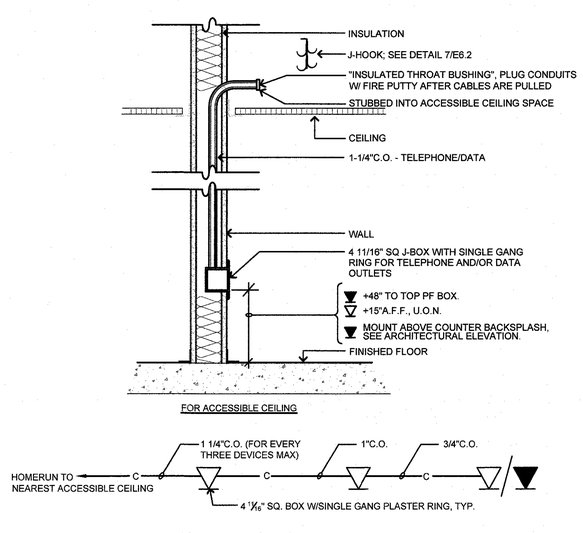

8 TELE/DATA/LOW VOLTAGE SWITCH OUTLET

NO SCALE

INTERIOR LIGHTING & RECEPTACLE CONTROLS SEQUENCE OF OPERATION

ROOM TYPE	OCCUPANCY SENSOR - MANUAL ON	OCCUPANCY SENSOR - AUTO ON	OCCUPANCY SENSOR - AUTO OFF	OCCUPANCY SENSOR - PARTIAL OFF	CONTINUOUS DIMMING TO OFF	ON/OFF SWITCH	MULTI-ZONE DIMMING	AUTO TIME CLOCK OFF	AUTO TIME CLOCK ON	DAYLIGHT SENSOR - ON	OVERRIDE SWITCH CONTROL	SET LIGHT LEVEL TO 100% ON	SET LIGHT LEVEL TO BOS RECOMMENDATIONS	AUTO DIMMING WHERE SHOWN ON PLANS	ACCEPTANCE TESTING OF CONTROLS BY CXCATT	
CHILDREN'S PROGRAM ROOM					•	•	•	•		•		•	•			'ON' AND 'OFF' TIME SET PER OWNER.
CHILDREN'S ACTIVITY					•	•	•	•		•		•	•			'ON' AND 'OFF' TIME SET PER OWNER.

GENERAL NOTES:

A. NOT TO EXCEED 12" SAG IN CABLE.

B. SYSTEMS NEED TO BE SEPARATED BY COLOR AND SEGREGATED ALONG PATH.

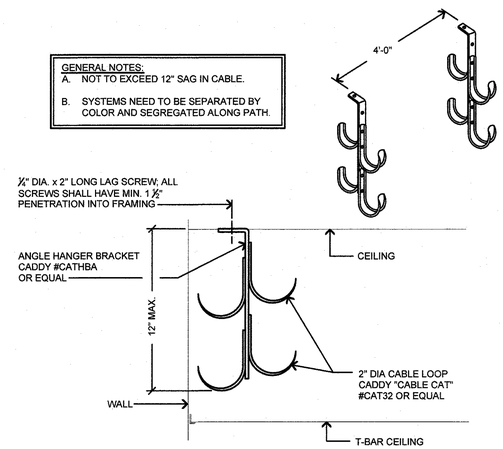

7 LOW VOLTAGE CABLE SUPPORT DETAIL

NO SCALE

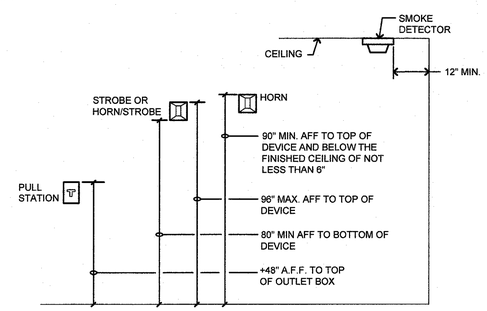

WHERE LOW CEILING HEIGHTS DO NOT PERMIT WALL MOUNTING AT MIN 80", WALL MOUNTED VISUAL APPLIANCES SHALL BE MOUNTED WITHIN 6" OF THE CEILING.

6 F.A. DEVICE MOUNTING ELEVATION

NO SCALE

DATALINE SWITCH
WATTSTOPPPER
#HDLS6SS

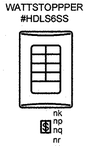

DIMMER SWITCHES	LABEL
nk	ACTIVITY LTG
no	ACTIVITY PENDANT
nq	PROGRAM LTG
nr	PROGRAM PENDANT
ns	PROGRAM DOWNLIGHT

5 MASTER LIGHTING CONTROLS ACTIVITY AND PROGRAM RM

NO SCALE

SHEET NOTES

1. FOR DEVICE QUANTITY AND LOCATION; SEE LIGHTING FLOOR PLANS.
2. LMRC-212 IS A (2) LOAD CONTROLLER THAT WILL CONTROL A SINGLE (1) 20A CIRCUIT 0-10V CONTROL.
3. LMRC-213 IS A (3) LOAD CONTROLLER THAT WILL CONTROL A SINGLE (1) 20A CIRCUIT 0-10V CONTROL.

GENERAL DETAIL NOTES:

A. ALL PART #s ARE WATTSTOPPER.

B. ALL LOW VOLTAGE WIRING INCLUDING DLM WIRING SHALL BE CONCEALED IN 1" CONDUIT.

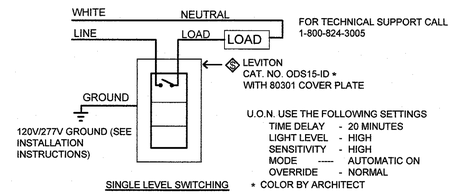

4 WALL OCCUPANCY SENSOR WIRING

NO SCALE

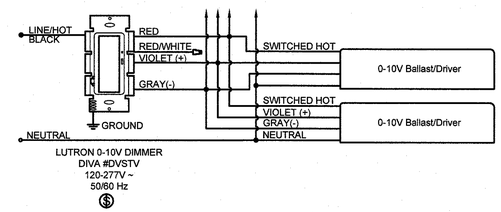

3 0-10V DIMMING WIRING DIAGRAM

NO SCALE

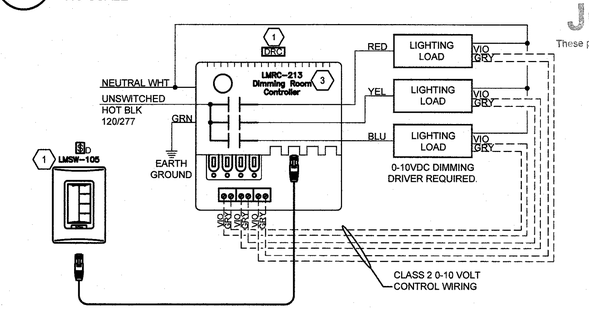

2 3-ZONE 0-10V DIMMING LIGHTING CONTROL

NO SCALE

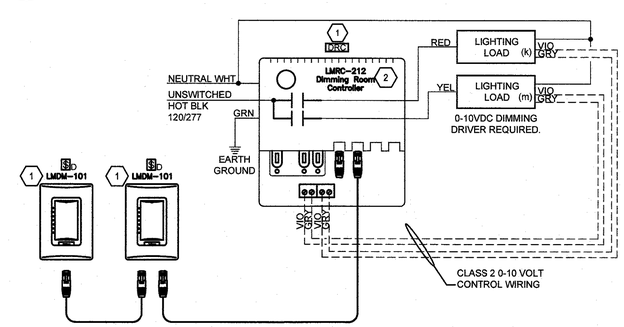

1 2-ZONE 0-10V DIMMING LIGHTING CONTROL

NO SCALE

WESTON MILES
ARCHITECTS
17500 Depot Street, Suite #200
Morgan Hill, CA 95037
1 •408 • 779 • 6686
• Architecture • Landscape •

REGISTERED ARCHITECT
No. C 18,552
RENEWAL 08-31-19
STATE OF CALIFORNIA

NOT VALID WITHOUT SIGNATURE

AURUM CONSULTING ENGINEERS MONTEREY BAY, INC.
Project No. 16163.01
60 Garden Court • Suite 210 • Monterey, CA 93940
T 831.649.3300 • F 831.649.3305 • www.aceinb.com

These drawings are instruments of service and are the property of AURUM CONSULTING ENGINEERS MONTEREY BAY, INC. All designs and other information on the drawings are for use on the specified project and shall not be used otherwise without the expressed written permission of AURUM CONSULTING ENGINEERS MONTEREY BAY, INC.

PHILIP ANDREY
REGISTERED PROFESSIONAL ENGINEER
ELECTRICAL
STATE OF CALIFORNIA

REVISIONS

1 03/28/2019 PLAN REVIEW #2

2

3

JOB COPY
These plans must be kept on the job at all times.
CITY OF MORGAN HILL BUILDING DIVISION

ELECTRICAL DETAILS

MORGAN HILL LIBRARY ADDITION

CITY OF MORGAN HILL
660 W MAIN AVE, MORGAN HILL, CA 95037

These drawings are instruments of service and are the property of WESTON MILES ARCHITECTS, INC. All designs and other information on the drawings are for use on the specified project and shall not be used otherwise without the expressed written permission of WESTON MILES ARCHITECTS, INC.

Written dimensions on these drawings shall have precedence over scaled dimensions. Contractors shall verify and be responsible for all dimensions and conditions on the job and this office shall be notified of any variations from the dimensions and conditions shown by these drawings. Shop details shall be submitted to this office for approval before proceeding with fabrication.

© Copyrighted 2019

DATE: 02/8/2019

JOB NO: 15058

E6.2

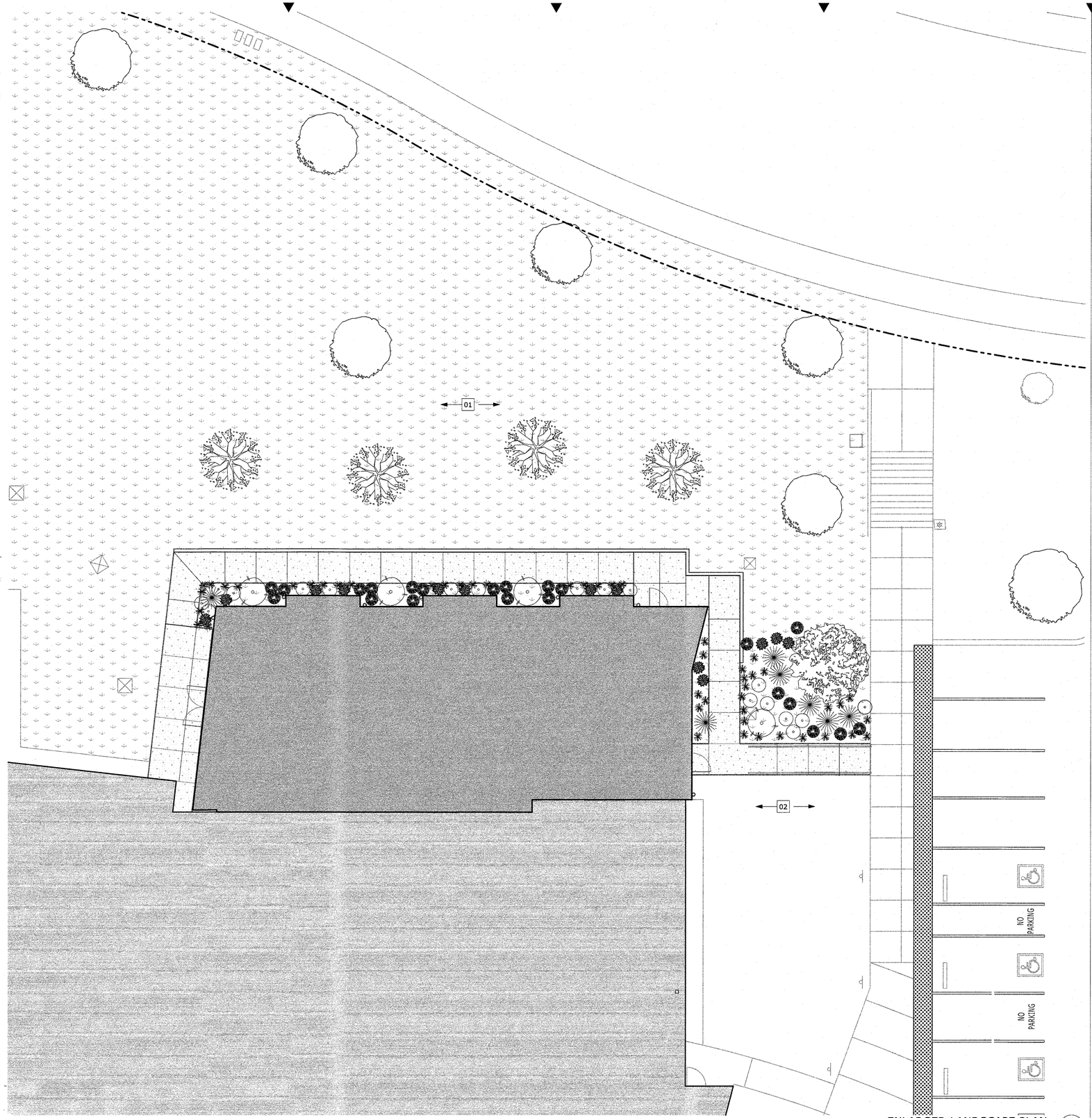

ENLARGED LANDSCAPE PLAN 3
SCALE: 1/8" = 1'-0"

GENERAL NOTES

1. ALL TREES TO REMAIN UNLESS OTHERWISE NOTED.
2. CONTRACTOR SHALL VERIFY LOCATION AND DEPTH OF ALL <E> UTILITIES PRIOR TO ANY EXCAVATION.
3. ALL SPOILS, DEBRIS, AND INCIDENTAL ITEMS TO BE REMOVED SHALL BE HAULED OFF SITE BY CONTRACTOR AND BE DISPOSED OF IN A LAWFUL MANNER AS IT ACCUMULATES.
4. CONTRACTOR SHALL TAKE CARE NOT TO DAMAGE IN ANY WAY, ANY <E>ELEMENTS NOT DESIGNATED FOR REMOVAL. SUCH DAMAGE IS THE RESPONSIBILITY OF THE CONTRACTOR AT NO ADDITIONAL COST TO THE OWNER.
5. SHUT OFF ALL WATER, GAS & ELECTRIC WILL NEED TO BE COORDINATED W/<E>SITE OPERATIONS
6. THE <E> BUILDINGS ARE TO REMAIN IN USE DURING CONSTRUCTION.
7. THE SITE MUST BE CLEANED AT THE END OF EACH BUSINESS DAY.
8. CONTRACTOR TO MAINTAIN A SAFE, SECURE SITE.
9. THIS DRAWING REFLECTS THE <E> SITE CONDITIONS TO THE BEST OF OUR KNOWLEDGE
10. CONTRACTOR TO COORDINATE FINAL LOCATION/LAYOUT OF ALL PLANTS W/ARCHITECT ONSITE PRIOR TO PLANTING
11. CONTRACT TO MAINTAIN & WATER TREES & LANDSCAPE DURING TOTAL COURSE OF CONSTRUCTION FOR WHOLE LIBRARY SITE.

PLANTING LEGEND

SYMBOL	BOTANICAL NAME	COMMON NAME	SIZE	QTY	REMARKS
TREES					
	<E> TREE	<E> TREE	-	-	PROTECT DURING DEMOLITION AND RECONSTRUCTION
	CELTIS OCCIDENTALIS	COMMON HACKBERRY	24"	4	SEE DETAIL 9/L3.1
	QUERCUS AGRIFOLIA	COAST LIVE OAK	24"	1	SEE DETAIL 9/L3.1
GRASSES AND GROUND COVERS					
	ARISTIDA PURPUREA	PURPLE THREE-AWN	1 GAL	25	SEE DETAIL 1/L3.1
	PEROVSKIA	RUSSIAN SAGE	1 GAL	20	SEE DETAIL 1/L3.1
	STIPA GIAGANTEA	GIANT FEATHER GRASS	5 GAL	6	SEE DETAIL 1/L3.1
	LEUCOSPERMUM	SCARLET RIBBON	5 GAL	10	SEE DETAIL 1/L3.1
	MULBERGIA RIGENS	DEERGRASS	1 GAL	60	SEE DETAIL 1/L3.1
	LAVANDULA	LAVENDER	1 GAL	21	SEE DETAIL 1/L3.1
	FESTUCA RUBRA	FESCUE	-	-	-

KEY NOTES

01 RESEED WHERE DEMO AND/OR GRADING OCCURED

02 <E> PLANTING - PROTECT AND MAINTAIN DURING CONSTRUCTION. REPLACE ANY PLANTS OR MATERIALS DAMAGED DURING CONSTRUCTION.

JOB COPY
These plans must be kept on the job at all times.
CITY OF MORGAN HILL
BUILDING DIVISION

WESTON MILES
ARCHITECTS
17500 Depot Street, Suite #200
Morgan Hill, CA 95037
1 •408 • 779 • 6686
• Architecture • Landscape •

NOT VALID WITHOUT SIGNATURE

REVISIONS
1 03/28/2019 PLAN REVIEW #2
2
3

LANDSCAPE PLAN

MORGAN HILL LIBRARY ADDITION

CITY OF MORGAN HILL
660 W MAIN AVE, MORGAN HILL, CA 95037

These drawings are instruments of service and are the property of WESTON MILES ARCHITECTS, INC. All designs and other information on the drawings are for use on the specified project only and are not to be reproduced without the expressed written permission of WESTON MILES ARCHITECTS, INC.

Written dimensions on these drawings shall have precedence over scale dimensions. The contractor shall be fully responsible for all dimensions and conditions on the job and this office shall be notified of any variations from the dimensions and conditions shown by these drawings. Shop details shall be submitted to this office for approval before proceeding with fabrication.

© Copyrighted 2019

DATE: 02/8/2019

JOB NO: 15058

L1.0

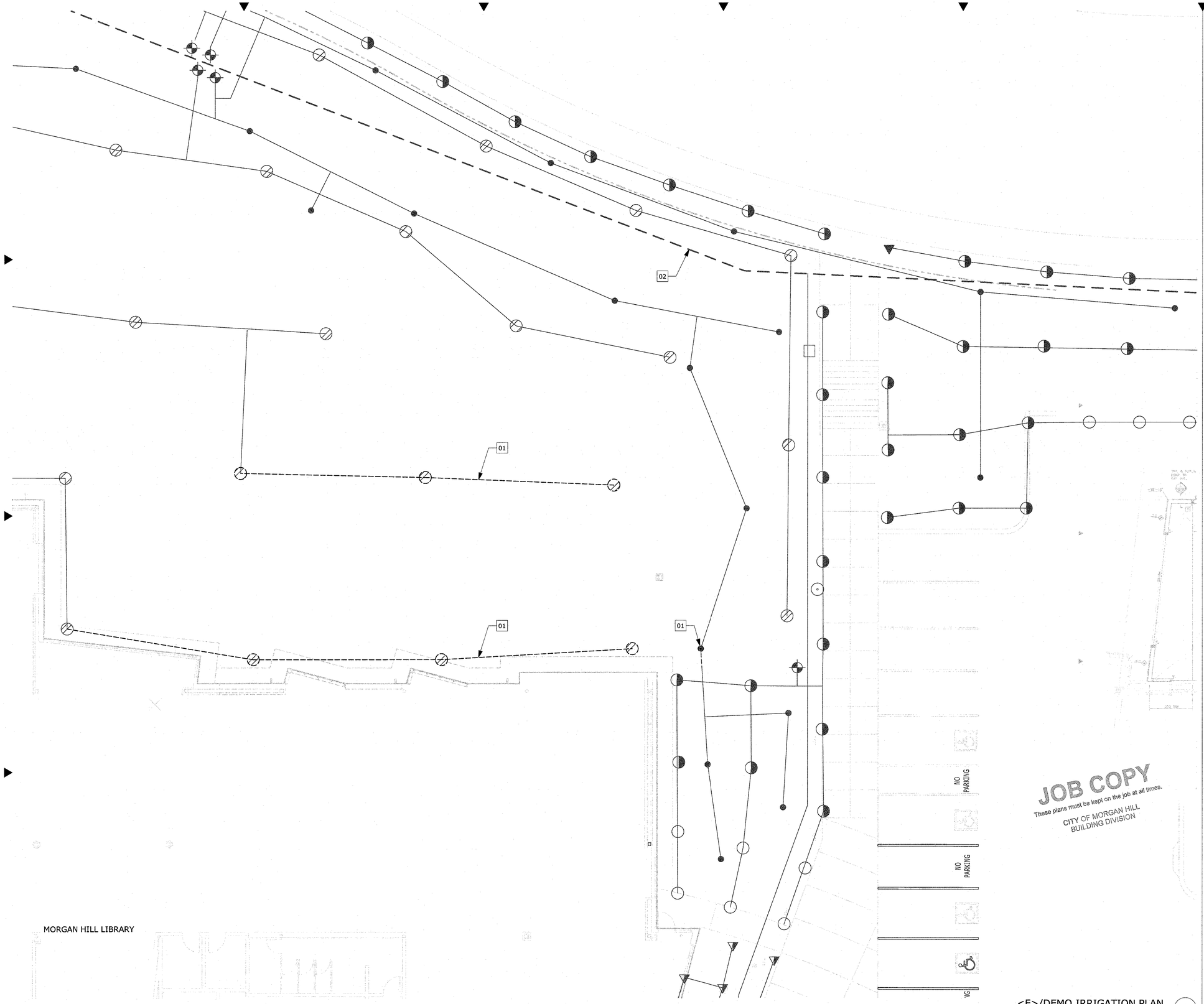

JOB COPY
These plans must be kept on the job at all times.
CITY OF MORGAN HILL
BUILDING DIVISION

<E>/DEMO IRRIGATION PLAN
SCALE: 1/8" = 1'-0"
1

GENERAL NOTES

1. SLEEVE TO BE TWICE THE SIZE OF THE PIPES
2. ALL IRRIGATION LINES UNDER PAVING TO BE INSTALLED WITHIN A SLEEVE. IRRIGATION LINES IN SAME PROXIMITY TO BE INSTALLED IN SAME SLEEVE
3. FOR CONTROLLER INSTALLATION, SEE DETAIL 4/L3.1
4. FOR REMOTE CONTROL VALVE INSTALLATION, SEE DETAIL 11/L3.1
5. FOR QUICK-COUPLER INSTALLATION, SEE DETAIL 10/L3.1
6. FOR QUADRA/OCTA BUBBLER INSTALLATION, SEE DETAIL 7/L3.1
7. FOR IRRIGATION LINE INSTALLATION, SEE DETAIL 2/L3.1
8. FOR POP-UP TREE BUBBLER INSTALLATION, SEE DETAIL 5/L3.1
9. FOR ROTOR SPRAY INSTALLATION, SEE DETAIL 6/L3.1
10. FOR REDUCED PRESSURE BACKFLOW PREVENTOR SEE DETAIL12/L3.1

KEY NOTES

##

01 REMOVE <E> IRRIGATION HEADS AND PIPES

02 <E> MAIN LINE TO REMAIN

03 REMOVE AND RELOCATE <E> IRRIGATION HEADS AND PIPES

SYMBOL LEGEND

SYMBOL	DESCRIPTION	MAKE	MODEL	SIZE	NOTES
P.O.C.	POINT OF CONNECTION	-	-	-	-
C	8-STATION CONTROLLER	HUNTER	XC 800	-	3
	REMOTE CONTROL VALVE	HUNTER	PGV100G	-	4
	QUICK COUPLER VALVE	HUNTER	HQ33-DLRC	3/4"	5
	MAIN LINE	-	-	1 1/2"	7
	LATERAL LINE	-	-	-	7
	DRIP TUBING	PEPCO	P-QB	1/4"	7
	PVC SLEEVE	-	-	-	1, 7
	QUADRA/OCTA BUBBLER	PEPCO	-	-	6
	POP-UP TREE BUBBLER	HUNTER	PROS-06 CV-4Q	.22 GPM	8
	ROTOR	HUNTER	MP2000 13'-21' R	-	9
	REDUCED PRESSURE BACKFLOW PREVENTOR	FEBCO	LF825Y	1 1/2"	10

EXISITNG IRRIGATION LEGEND

<E> GRISWOLD 2000 SERIES REMOTE CONTROL VALVE

<E> LATERAL LINE

<E> FEBCO 825Y REDUCED PRESSURE BACKFLOW PREVENTOR W/ PRESSURE REGULATOR

<E> RAINBIRD 1806-SAM-PRS W/ 10' F, H, T, Q NOZZLE TURF POP-UP @ TURF AREA
<E> RAINBIRD 1812-SAM-PRS W/ 10' F, H, T, Q NOZZLE SHRUB HI-POP @ SHRUB AREA

<E> RAINBIRD 1806-SAM-PRS W/ 12' F, H, T, Q NOZZLE TURF POP-UP @ TURF AREA
<E> RAINBIRD 1812-SAM-PRS W/ 12' F, H, T, Q NOZZLE SHRUB HI-POP @ SHRUB AREA

<E> RAINBIRD 1806-SAM-PRS W/ 15' F, H, T, Q NOZZLE TURF POP-UP @ TURF AREA
<E> RAINBIRD 1812-SAM-PRS W/ 15' F, H, T, Q NOZZLE SHRUB HI-POP @ SHRUB AREA

<E> RAINBIRD 1812-SAM-PRS W/ 8' F, H, T, Q NOZZLE SHRUB HI-POP @ SHRUB AREA

<E> RAINBIRD 1812-SAM-PRS W/ 15VAN NOZZLE SHRUB HI-POP

<E> RAINBIRD 1401 PRESSURE COMPENSATING BUBBLER

WESTON MILES
ARCHITECTS
17500 Depot Street, Suite #200
Morgan Hill, CA 95037
1 •408 • 779 • 6686
• Architecture • Landscape •

REGISTERED ARCHITECT
No. C 18,552
EXPIRES: 08-31-19
STATE OF CALIFORNIA

NOT VALID WITHOUT SIGNATURE

REVISIONS
1 03/28/2019 PLAN REVIEW #2
2
3

<E>/DEMO IRRIGATION PLAN

MORGAN HILL LIBRARY ADDITION

CITY OF MORGAN HILL
660 W MAIN AVE, MORGAN HILL, CA 95037

These drawings are instruments of service and are the property of WESTON MILES ARCHITECTS, INC. All designs and other information on the drawings are for use on the specified project and shall not be used otherwise without the expressed written permission of WESTON MILES ARCHITECTS, INC.

Written dimensions on these drawings shall have precedence over scaled dimensions. Contractors shall verify and be responsible for all dimensions and conditions on the job and this office shall be notified of any variations from the dimensions and conditions shown by these drawings. Shop drawings shall be submitted to this office for approval before proceeding with fabrication.

© Copyrighted 2019

DATE: 02/8/2019

JOB NO: 15058

L2.0

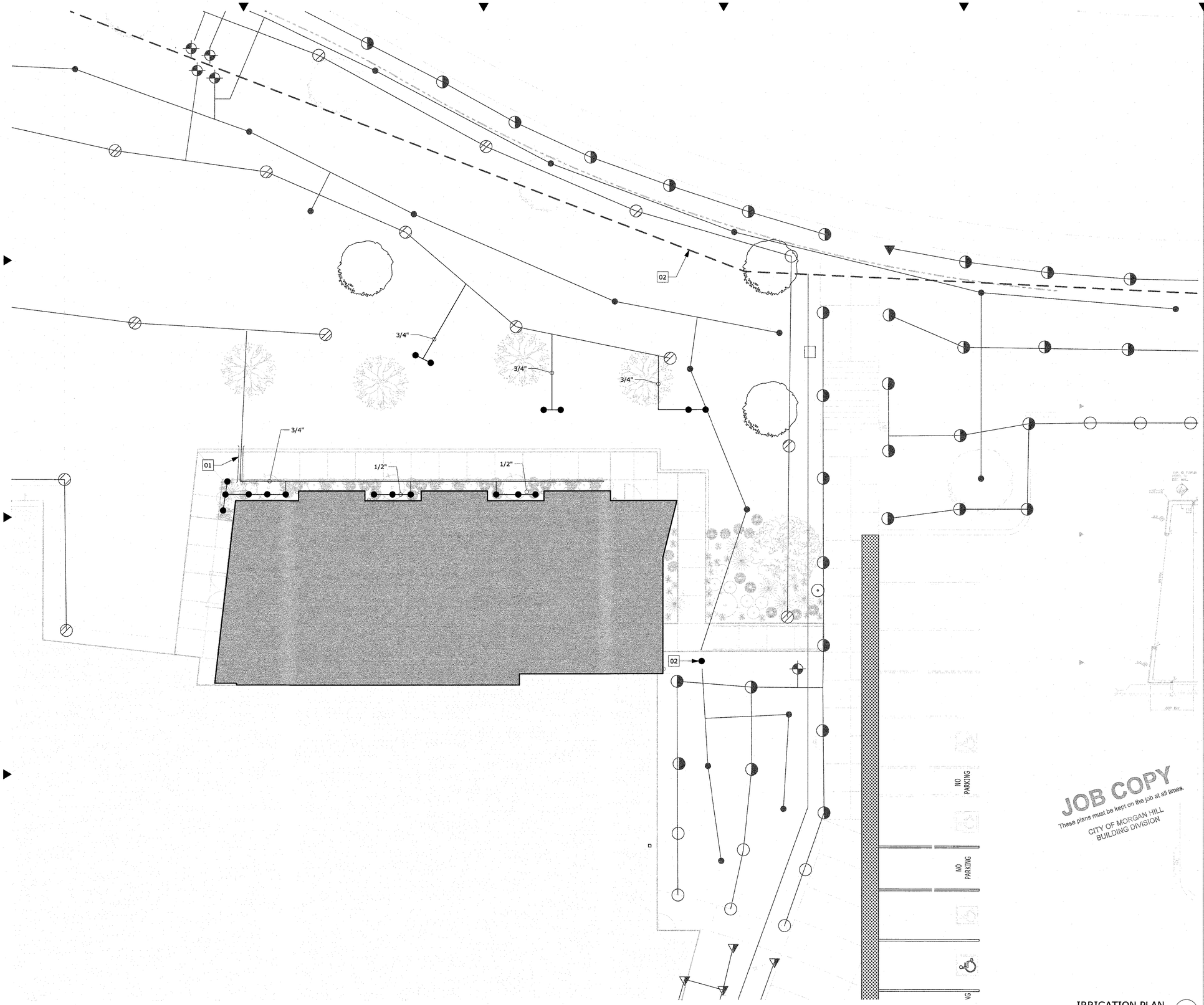

JOB COPY
These plans must be kept on the job at all times.
CITY OF MORGAN HILL
BUILDING DIVISION

IRRIGATION PLAN
SCALE: 1/8" = 1'-0"
1

GENERAL NOTES

1. SLEEVE TO BE TWICE THE SIZE OF THE PIPES
2. ALL IRRIGATION LINES UNDER PAVING TO BE INSTALLED WITHIN A SLEEVE. IRRIGATION LINES IN SAME PROXIMITY TO BE INSTALLED IN SAME SLEEVE
3. FOR CONTROLLER INSTALLATION, SEE DETAIL 4/L3.1
4. FOR REMOTE CONTROL VALVE INSTALLATION, SEE DETAIL 11/L3.1
5. FOR QUICK-COUPLER INSTALLATION, SEE DETAIL 10/L3.1
6. FOR QUADRA/OCTA BUBBLER INSTALLATION, SEE DETAIL 7/L3.1
7. FOR IRRIGATION LINE INSTALLATION, SEE DETAIL 2/L3.1
8. FOR POP-UP TREE BUBBLER INSTALLATION, SEE DETAIL 5/L3.1
9. FOR ROTOR SPRAY INSTALLATION, SEE DETAIL 6/L3.1
10. FOR REDUCED PRESSURE BACKFLOW PREVENTOR SEE DETAIL12/L3.1

KEY NOTES

##

01 4" SLEEVE, TYP.

02 RELOCATED SPRINKLER HEAD AND LINE

03 <E> MAIN LINE TO REMAIN

SYMBOL LEGEND

- <E> GRISWOLD 2000 SERIES REMOTE CONTROL VALVE
- <E> MAIN LINE
- NEW MAIN LINE
- <E> LATERAL LINE
- NEW LATERAL LINE
- <E> FEBCO 825Y REDUCED PRESSURE BACKFLOW PREVENTOR W/ PRESSURE REGULATOR
- <E> RAINBIRD 1806-SAM-PRS W/ 10' F, H, T, Q NOZZLE TURF POP-UP @ TURF AREA
  <E> RAINBIRD 1812-SAM-PRS W/ 10' F, H, T, Q NOZZLE SHRUB HI-POP @ SHRUB AREA
- <E> RAINBIRD 1806-SAM-PRS W/ 12' F, H, T, Q NOZZLE TURF POP-UP @ TURF AREA
  <E> RAINBIRD 1812-SAM-PRS W/ 12' F, H, T, Q NOZZLE SHRUB HI-POP @ SHRUB AREA
- <E> RAINBIRD 1806-SAM-PRS W/ 15' F, H, T, Q NOZZLE TURF POP-UP @ TURF AREA
  <E> RAINBIRD 1812-SAM-PRS W/ 15' F, H, T, Q NOZZLE SHRUB HI-POP @ SHRUB AREA
- <E> RAINBIRD 1812-SAM-PRS W/ 8' F, H, T, Q NOZZLE SHRUB HI-POP @ SHRUB AREA
- <E> RAINBIRD 1812-SAM-PRS W/ 15VAN NOZZLE SHRUB HI-POP
- <E> RAINBIRD 1401 PRESSURE COMPENSATING BUBBLER
- DRIP TUBING PEPCO P-QB 1/4" 7
- P.O.C. POINT OF CONNECTION
- PVC SLEEVE - 4" TYPICAL

WESTON MILES
ARCHITECTS
17500 Depot Street, Suite #200
Morgan Hill, CA 95037
1 •408 • 779 • 6686
• Architecture • Landscape •

LICENSED ARCHITECT
No. C 18,552
EXPIRES 06-30-19
STATE OF CALIFORNIA
NOT VALID WITHOUT SIGNATURE

REVISIONS
1 03/28/2019 PLAN REVIEW #2
2
3

IRRIGATION PLAN

MORGAN HILL LIBRARY ADDITION

CITY OF MORGAN HILL
660 W MAIN AVE, MORGAN HILL, CA 95037

These drawings are instruments of service and are the property of WESTON MILES ARCHITECTS, INC. All designs and other information on the drawings are for use on the specified project and shall not be used otherwise without the expressed written permission of WESTON MILES ARCHITECTS, INC.

Written dimensions on these drawings shall have precedence over scaled dimensions. Contractors shall verify and be responsible for all dimensions and conditions on the job and this office shall be notified of any variations from the dimensions and conditions shown on these drawings. Shop details shall be submitted to this office for approval before proceeding with fabrication.

© Copyrighted 2019

DATE: 02/8/2019

JOB NO: 15058

L2.1

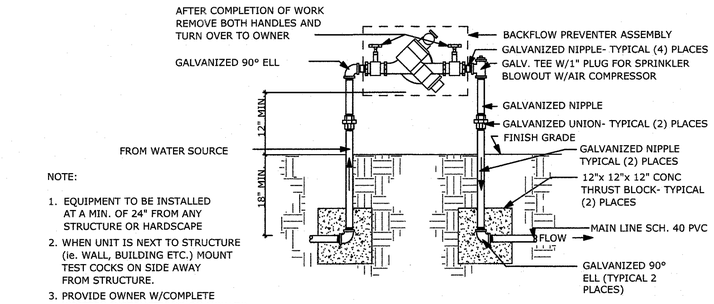

NOTE:

1. EQUIPMENT TO BE INSTALLED AT A MIN. OF 24" FROM ANY STRUCTURE OR HARDSCAPE
2. WHEN UNIT IS NEXT TO STRUCTURE (ie. WALL, BUILDING ETC.) MOUNT TEST COCKS ON SIDE AWAY FROM STRUCTURE.
3. PROVIDE OWNER W/COMPLETE WRITTEN INSTRUCTIONS ON HOW TO DRAIN ENTIRE BACKFLOW UNIT TO PREVENT FREEZING.

REDUCED PRESSURE BACKFLOW PREVENTER (12)
SCALE: 1' = 1'-0"

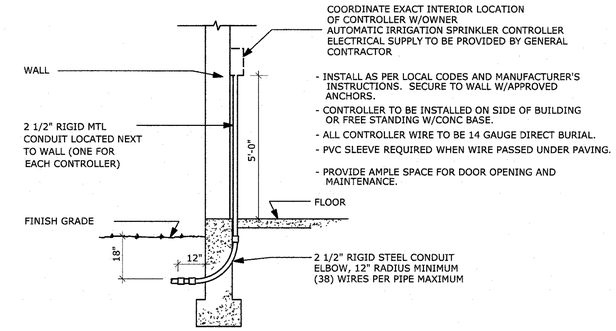

- INSTALL AS PER LOCAL CODES AND MANUFACTURER'S INSTRUCTIONS. SECURE TO WALL W/APPROVED ANCHORS.
- CONTROLLER TO BE INSTALLED ON SIDE OF BUILDING OR FREE STANDING W/CONC BASE.
- ALL CONTROLLER WIRE TO BE 14 GAUGE DIRECT BURIAL.
- PVC SLEEVE REQUIRED WHEN WIRE PASSED UNDER PAVING.
- PROVIDE AMPLE SPACE FOR DOOR OPENING AND MAINTENANCE.

CONTROLLER (4)
SCALE: 1' = 1'-0"

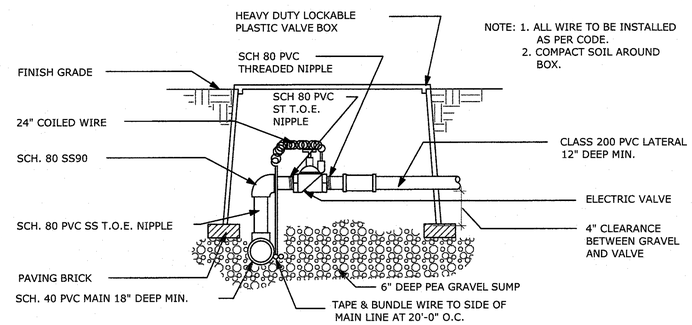

NOTE: 1. ALL WIRE TO BE INSTALLED AS PER CODE.
2. COMPACT SOIL AROUND BOX.

AUTOMATIC VALVE (11)
SCALE: 1' = 1'-0"

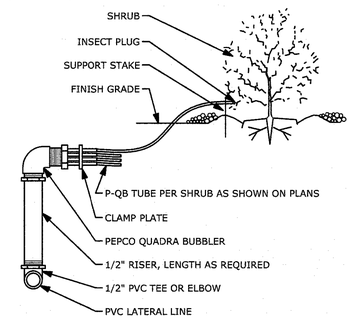

QUADRA BUBBLER (7)
SCALE: 1' = 1'-0"

JOB COPY
These plans must be kept on the job at all times.
CITY OF MORGAN HILL
BUILDING DIVISION

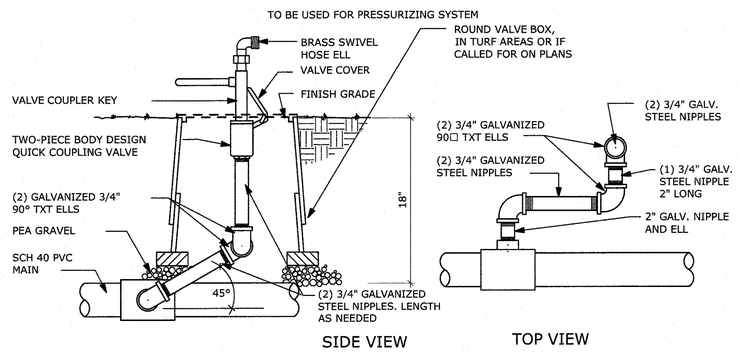

QUICK COUPLING VALVE (10)
SCALE: 1' = 1'-0"

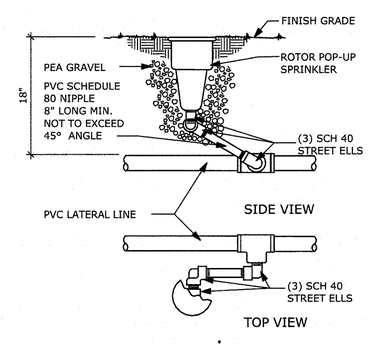

ROTOR POP-UP HEAD (6)
SCALE: 1' = 1'-0"

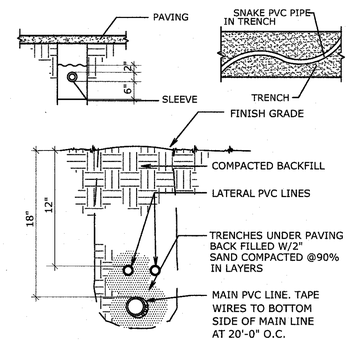

TRENCHING (2)
SCALE: 1' = 1'-0"

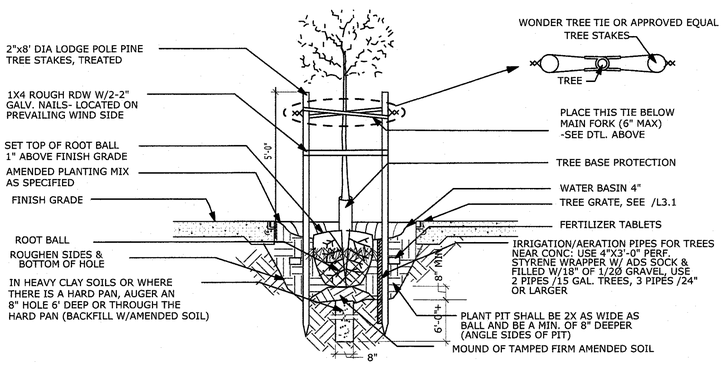

TREE PLANTING & STAKING (17)
SCALE: 1' = 1'-0"

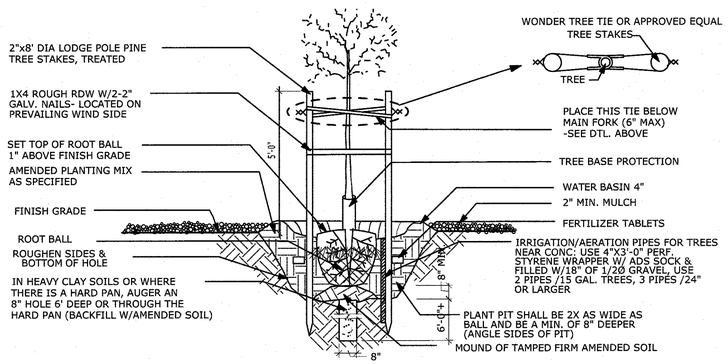

TREE PLANTING & STAKING (9)
SCALE: 1' = 1'-0"

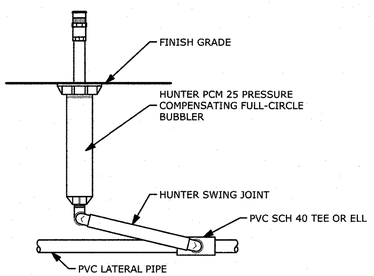

TREE BUBBLER (5)
SCALE: 1' = 1'-0"

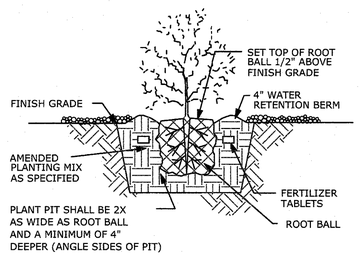

SHRUB PLANTING (1)
SCALE: 1' = 1'-0"

WESTON MILES
ARCHITECTS
17500 Depot Street, Suite #200
Morgan Hill, CA 95037
1 •408 • 779 • 6686
• Architecture • Landscape •

LICENSED ARCHITECT
No. C 18,552
EXPIRES 12-31-19
STATE OF CALIFORNIA
NOT VALID WITHOUT SIGNATURE

REVISIONS
1 03/28/2019 PLAN REVIEW #2
2
3

LANDSCAPE DETAILS

MORGAN HILL LIBRARY ADDITION

CITY OF MORGAN HILL
660 W MAIN AVE, MORGAN HILL, CA 95037

These drawings are instruments of service and are the property of WESTON MILES ARCHITECTS, INC. All designs and other information on the drawings are for use on the specified project and shall not be used otherwise without the expressed written permission of WESTON MILES ARCHITECTS, INC.

Written dimensions on these drawings shall have precedence over scaled dimensions. Contractors shall verify and be responsible for all dimensions and conditions on the job and report any errors, omissions or conflicts therefrom. Dimensions and conditions shown on these drawings. Shop details shall be submitted to this office for approval before proceeding with fabrication.

© Copyrighted 2019

DATE: 02/8/2019

JOB NO: 15058

L3.1