Date:
5-11-20

Customer:
Common Wealth Central Credit Union

Address:
400 Tennant Station
Morgan Hill, CA 95037

Salesperson/Project Manager:
Chris Gilliland

Designer:
JFrasher

Revision:
(7) 12-2-20

Notes:

ALL SIGNS MANUFACTURED BY BOOTZ AND DUKE SIGNS ARE 120 VOLT ANY OTHER VOLTAGE REQUIREMENTS MUST BE IN WRITING.

Drawings are for customer approval only. All dimensions must be verified before manufacturing. Drawings are not to be used as an installation guide.

BOOTZ & DUKE Signs

(602) 272-9356
2831 W. Weldon Ave.
Phoenix, AZ 85017
www.bootzandduke.com

THIS CUSTOM DESIGN IS THE EXCLUSIVE PROPERTY OF BOOTZ & DUKE SIGN CO. OF PHX, AZ. IT MAY NOT BE REPRODUCED, COPIED, OR EXHIBITED IN ANY FASHION.

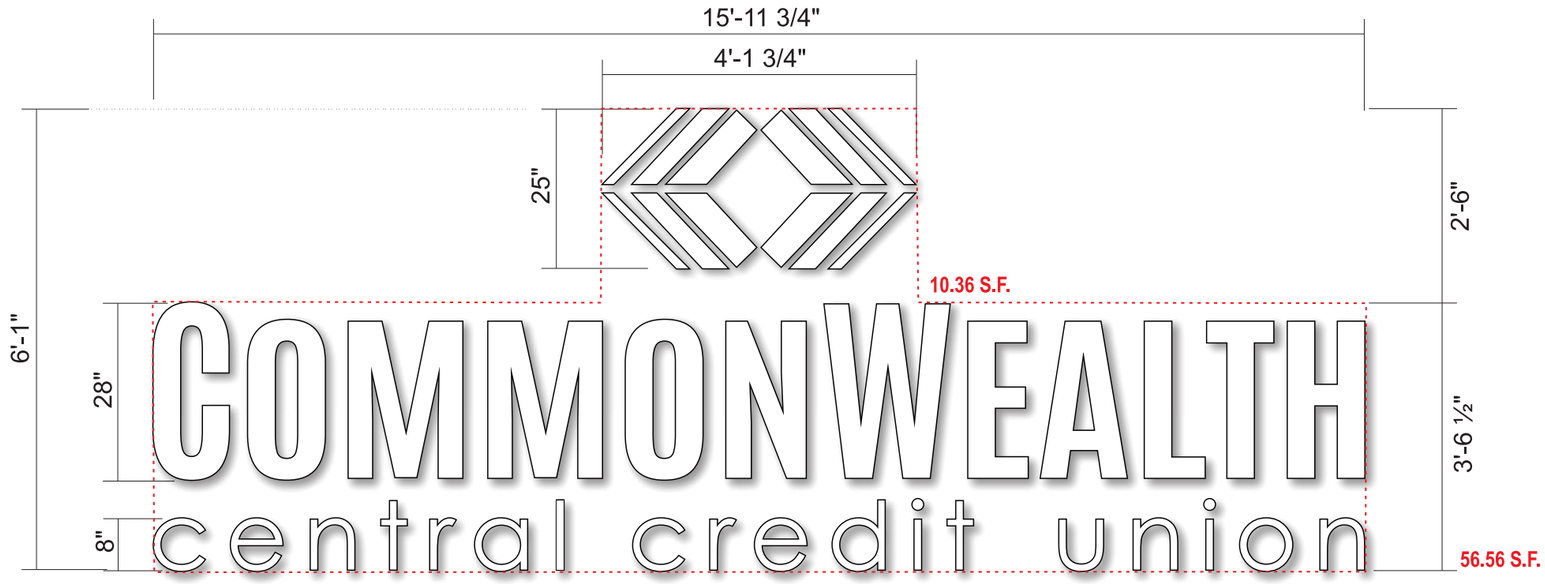

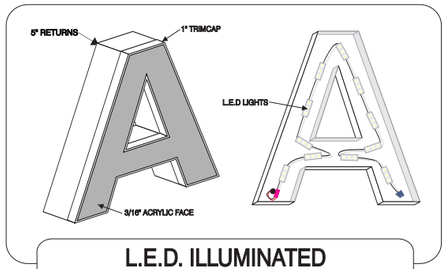

L.E.D. ILLUMINATED PAN CHANNEL LETTERS

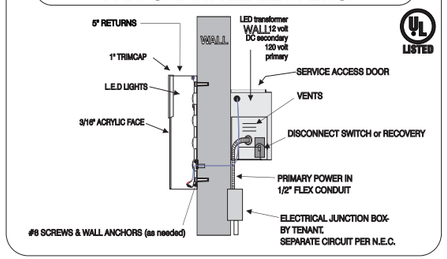

A MANUFACTURE AND INSTALL ONE(1) SET LED ILLUMINATED PAN CHANNEL LETTERS

SCALE: 1/2" = 1'-0"

66.92 SQ.FT. TOTAL
78.9 SQ.FT. MAX

FACES: 3/16" WHITE ACRYLIC
RETURNS: 040" CLC, 5" DEEP BLACK
BACKS: .063" ALUMINUM BACKS
TRIMCAP: 1" BLACK JEWELITE
ILLUMINATION: WHITE PRINCIPAL LEDs
POWER SUPPLIES: REMOTE IN TRANSFORMER BOX
INSTALLATION: FLUSH TO FASCIA WITH HARDWARE AS REQUIRED BEHIND INTERIOR STOREFRONT GLASS

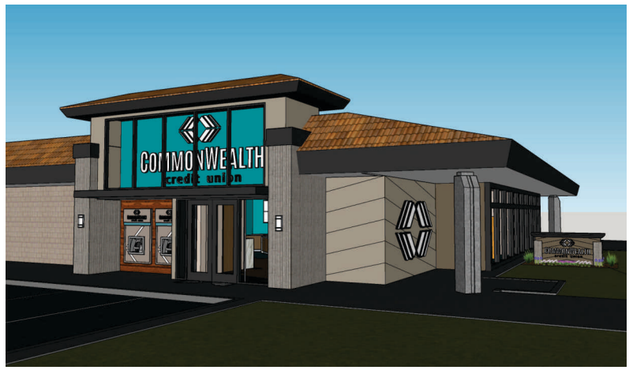

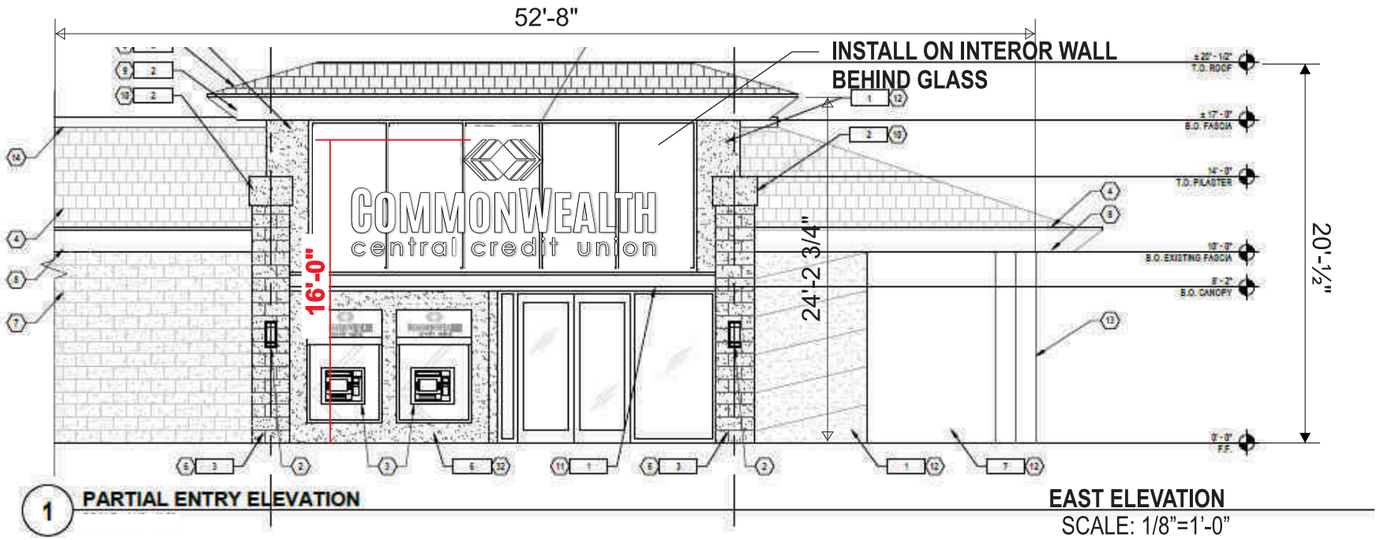

1 PARTIAL ENTRY ELEVATION

EAST ELEVATION
SCALE: 1/8"=1'-0"

Date:
5-11-20

Customer:
Common Wealth Central Credit Union

Address:
400 Tennant Station
Morgan Hill, CA 95037

Salesperson/Project Manager:
Chris Gilliland

Designer:
JFrasher

Revision:
(7) 12-2-20

Notes:

COMMONWEALTH
central credit union

A INSTALL AREA - PARTIAL CUT SECTIONS

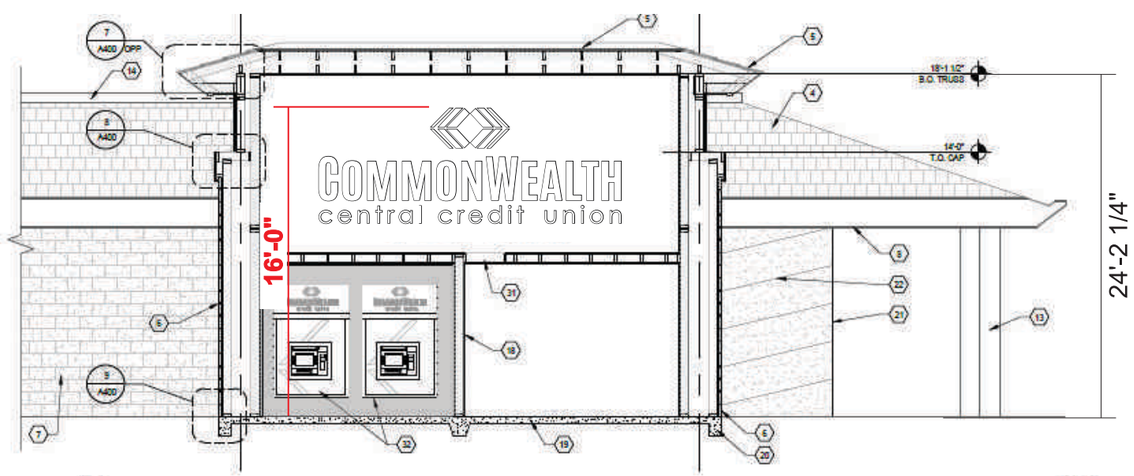

4 PARTIAL SECTION CUT — EAST ELEVATION
SCALE:1/8"=1'-0"

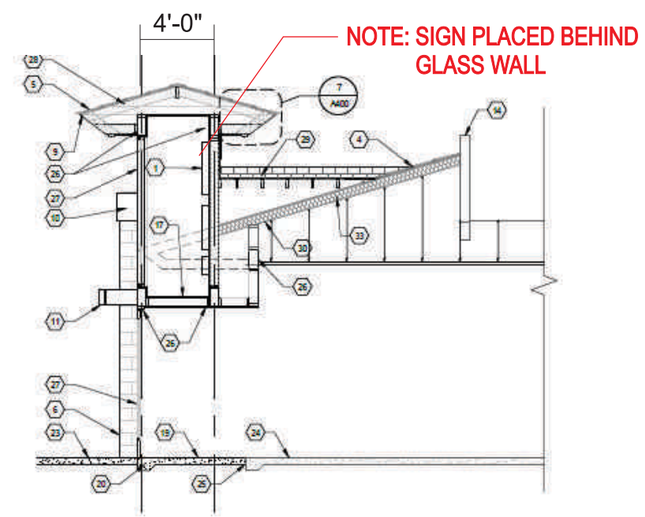

5 PARTIAL SECTION CUT — EAST ELEVATION
SCALE:1/8"=1'-0"

BOOTZ & DUKE Signs

(602) 272-9356
2831 W. Weldon Ave.
Phoenix, AZ 85017
www.bootzandduke.com

THIS CUSTOM DESIGN IS THE EXCLUSIVE PROPERTY OF BOOTZ & DUKE SIGN CO. OF PHX, AZ. IT MAY NOT BE REPRODUCED, COPIED, OR EXHIBITED IN ANY FASHION.

Date:

5-11-20

Customer:

Common Wealth Central Credit Union

Address:

400 Tennant Station
Morgan Hill, CA 95037

Salesperson/Project Manager:

Chris Gilliland

Designer:

JFrasher

Revision:

(7) 12-2-20

Notes:

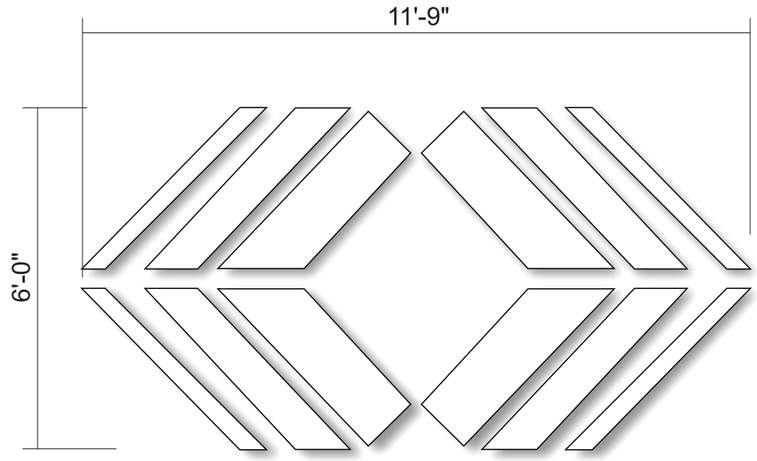

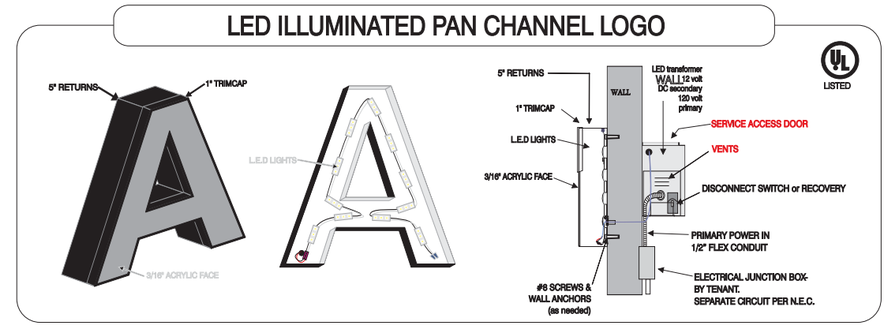

B MANUFACTURE AND INSTALL ONE(1) SET LED ILLUMINATED PAN CHANNEL LETTERS

SCALE: 3/8" = 1'-0"

70.5 SQ.FT.
107.25 SQ.FT. MAX

FACES: 3/16" WHITE ACRYLIC
RETURNS: 040" CLC, 5" DEEP BLACK
BACKS: .063" ALUMINUM BACKS
TRIMCAP: 1" BLACK JEWELITE
ILLUMINATION: WHITE PRINCIPAL LEDs
POWER SUPPLIES: REMOTE IN TRANSFORMER BOX
INSTALLATION: FLUSH TO FASCIA WITH HARDWARE AS REQUIRED

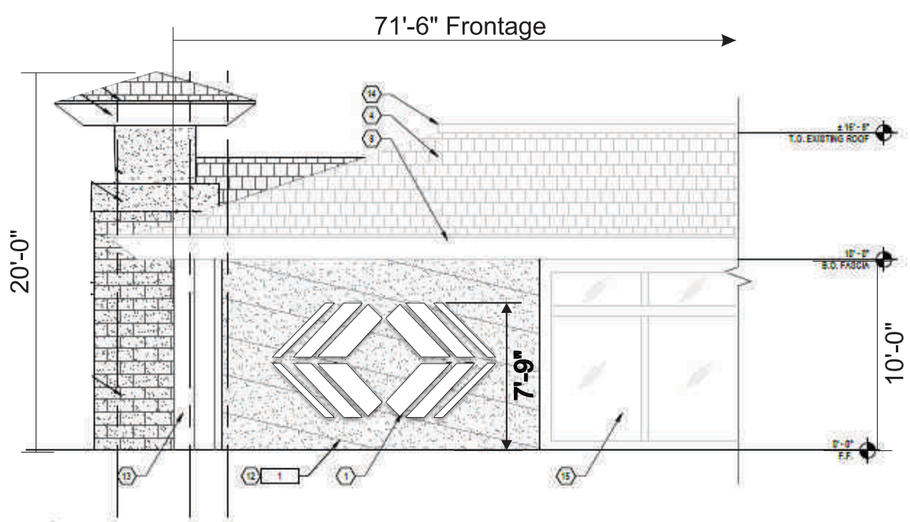

2 PARTIAL SIDE ELEVATION

NORTH ELEVATION
SCALE: 1/8"=1'-0"

BOOTZ & DUKE Signs

(602) 272-9356
2831 W. Weldon Ave.
Phoenix, AZ 85017
www.bootzandduke.com

THIS CUSTOM DESIGN IS THE EXCLUSIVE PROPERTY OF BOOTZ & DUKE SIGN CO. OF PHX, AZ. IT MAY NOT BE REPRODUCED, COPIED, OR EXHIBITED IN ANY FASHION.

Date:
5-11-20

Customer:
Common Wealth Central Credit Union

Address:
400 Tennant Station
Morgan Hill, CA 95037

Salesperson/Project Manager:
Chris Gilliland

Designer:
JFrasher

Revision:
(7) 12-2-20

Notes:

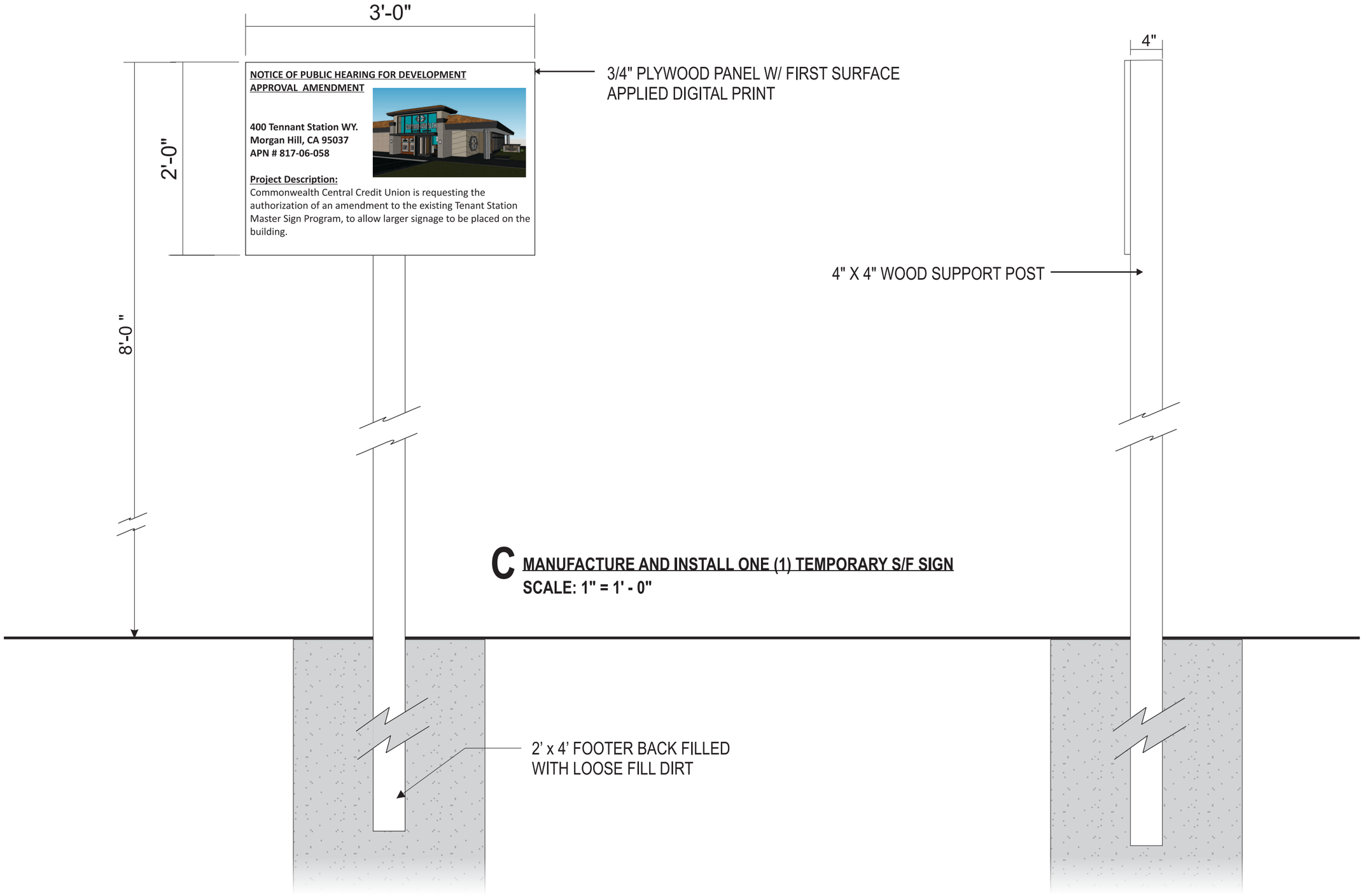

C MANUFACTURE AND INSTALL ONE (1) TEMPORARY S/F SIGN
SCALE: 1" = 1' - 0"

BOOTZ & DUKE Signs

(602) 272-9356
2831 W. Weldon Ave.
Phoenix, AZ 85017
www.bootzandduke.com

THIS CUSTOM DESIGN IS THE EXCLUSIVE PROPERTY OF BOOTZ & DUKE SIGN CO. OF PHX, AZ. IT MAY NOT BE REPRODUCED, COPIED, OR EXHIBITED IN ANY FASHION.

Design # 201128-07

Date:
5-11-20

Customer:
Common Wealth Central Credit Union

Address:
400 Tennant Station
Morgan Hill, CA 95037

Salesperson/Project Manager:
Chris Gilliland

Designer:
JFrasher

Revision:
(7) 12-2-20

Notes:

BOOTZ & DUKE Signs

(602) 272-9356
2831 W. Weldon Ave.
Phoenix, AZ 85017
www.bootzandduke.com

THIS CUSTOM DESIGN IS THE EXCLUSIVE PROPERTY OF BOOTZ & DUKE SIGN CO. OF PHX, AZ. IT MAY NOT BE REPRODUCED, COPIED, OR EXHIBITED IN ANY FASHION.

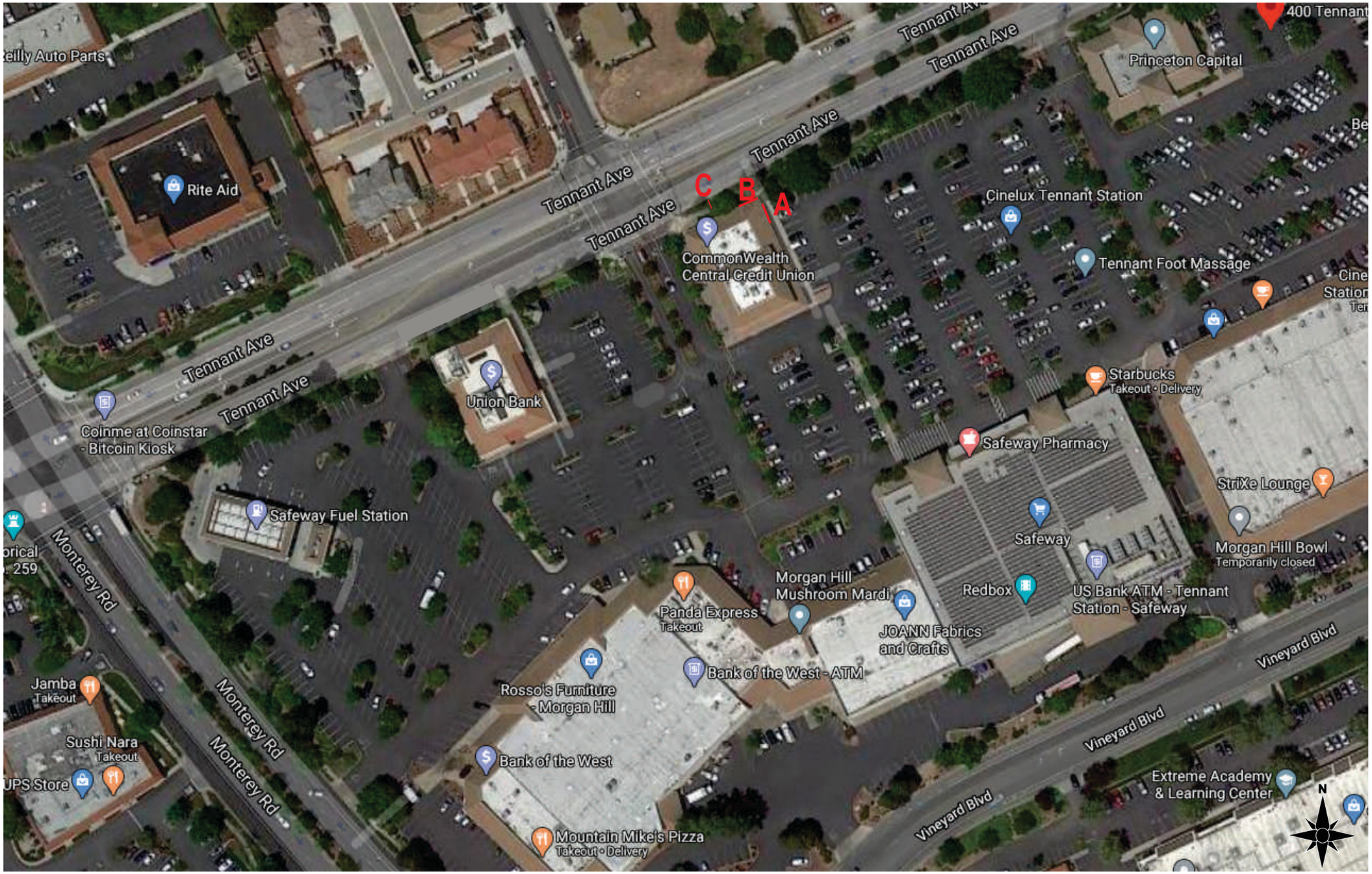

SITE MAP