CITY OF MORGAN HILL

CONSTRUCTION OF PUMP STATION
EAST MAIN AVE. WELL NO. 1

MARCH 2017

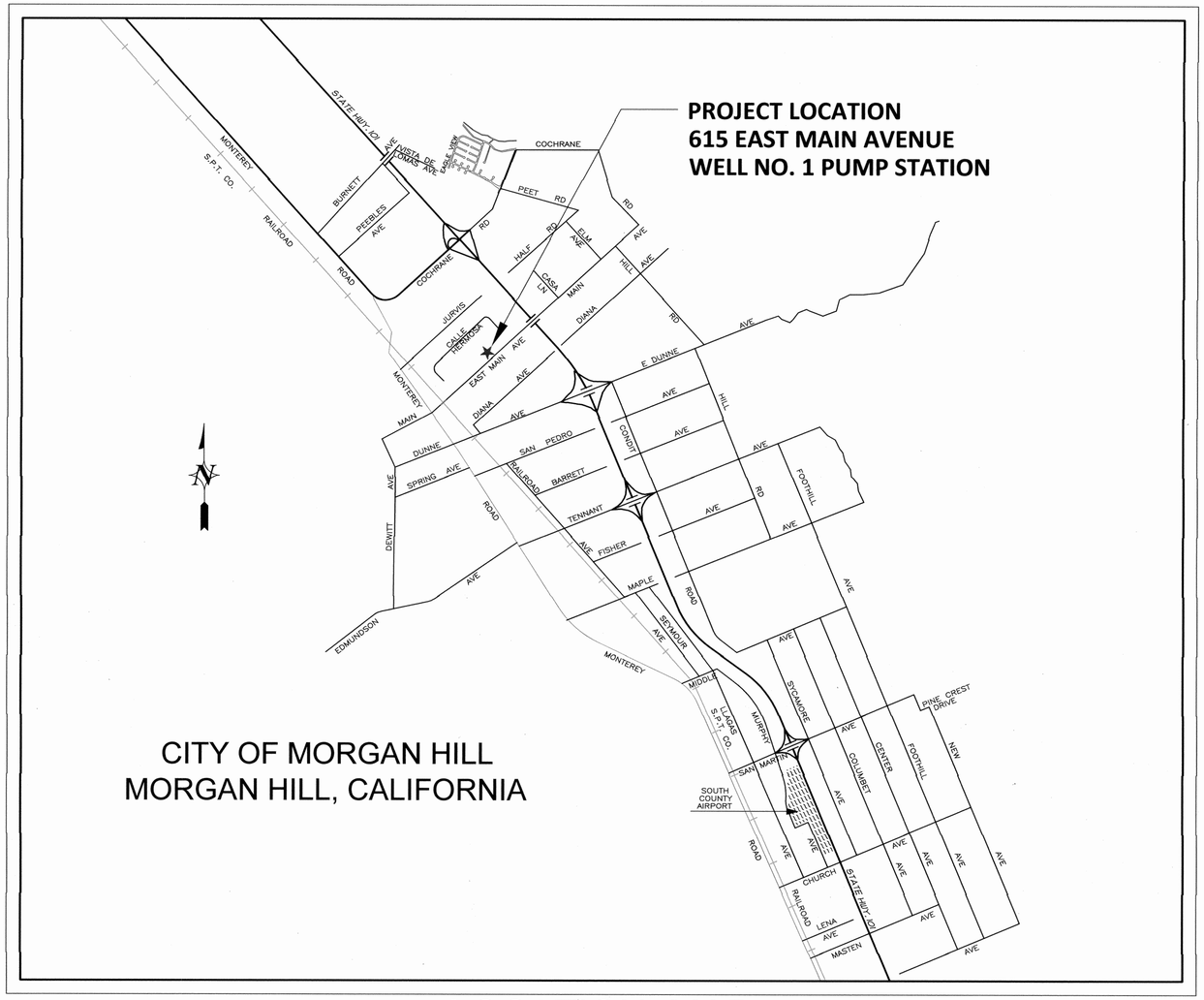

LOCATION MAP

NO SCALE

INDEX OF SHEETS

Sheet #	Title
G-1	TITLE SHEET
G-2	ABBREVIATIONS, NOTES AND SYMBOLS
G-3	PRODUCTION WELL PROFILE
C-1	SITE PLAN
C-2	GRADING PLAN
C-3	CIVIL DETAILS
C-4	STANDARD DETAILS I
C-5	STANDARD DETAILS II
C-6	FENCING DETAILS
M-1	PUMP STATION PIPING
M-2	BUILDING AND CONDUIT DETAILS
M-3	MECHANICAL DETAILS I
M-4	MECHANICAL DETAILS II
M-5	CHEMICAL ROOM DETAILS
M-6	MECHANICAL DETAILS III
M-7	MECHANICAL DETAILS IV
M-8	MECHANICAL DETAILS V
S-1	GENERAL NOTES AND DETAILS
S-2	FOUNDATION AND ROOF FRAMING
S-3	DETAILS
S-4	EXTERIOR ELEVATIONS AND SCHEDULES
S-5	REMOVABLE ROOF DETAILING
L-1	IRRIGATION PLAN
L-2	LANDSCAPE PLAN
L-3	DETAIL SHEET
E-1	ELECTRICAL SITE PLAN
E-2	PUMP STATION ELECTRICAL PLAN
E-3	SINGLE LINE DIAGRAM AND ELEVATION
E-4	CONTROL DIAGRAM
E-5	PLC I/O
E-6	PLC COMMUNICATIONS
E-7	ELECTRICAL DETAILS I
E-8	ELECTRICAL DETAILS II

APPROVAL FOR CONSTRUCTION

06-04-2017

Luhdorff & Scalmanini,
Consulting Engineers

Director of Public Works 6-21-17

City of Morgan Hill

REGISTERED PROFESSIONAL ENGINEER
JASON M. COLEMAN
No. C 78366
Exp. 9/30/2017
05/25/2017
CIVIL
STATE OF CALIFORNIA

TITLE SHEET
Construction of Pump Station
East Main Ave. Well No. 1
City of Morgan Hill
Morgan Hill, California

LUHDORFF & SCALMANINI
CONSULTING ENGINEERS
500 FIRST STREET
WOODLAND, CALIFORNIA
PHONE: (530) 661-0109

REVISIONS

NO.	DATE	REVISION

DATE: MARCH 2017
JOB NO.: 15-5-068
DESIGN BY: JMC
DRAWN BY: DWT
CHECKED BY: JDF
FILE: G-1.dwg

SHEET:
G-1

CAD FILE: G:/Projects/City of Morgan Hill/15-5-068/Pump Station/G-1.dwg CFG FILE: LSCE2500.PCP_MRG DATE: 05-24-17 9:19am

ABBREVIATIONS

AB	Aggregate Base
ABBC	Asbestos Bonded Bituminous Coated
ABM	Air-Blown Mortar
ABT	Anchor Bolt
Abut	Abutment
AC	Asphaltic concrete
ACB	Asphalt Concrete Base
ACP	Asbestos Cement Pipe
AFES	Alternative Flared End Section
Alt	Alternate
ASB	Aggregate Subbase
Ave	Avenue
Az	Azimuth
BSP	Black Steel Pipe
Bldg	Building
Blvd	Boulevard
BM	Bench Mark
BV	Butterfly Valve
CAP	Corrugated Aluminum Pipe
CARV	Combination Air Release Valve
CB	Catch Basin
CC	Center to Center
CF	Cubic Foot
CFM	Cubic Feet per Minute
CIP	Cast Iron Pipe
Clr	Clear, Clearance
℄	Centerline
CL	Class
C.L.	Chain Link
CMP	Corrugated Metal Pipe
CMU	Concrete Masonry Unit
Co	County
Col	Column
CONC	Concrete
CONN	Connection
Const	Construct(ion)
CRSP	Concreted Rock Slope Protection
CSP	Corrugated Steel Pipe
CTB	Cement Treated Base
CY	Cubic Yard
CV	Check Valve
D	Depth
Dbl	Double
DET	Detail
DI	Drainage/Drop Inlet
Dia	Diameter
DIP	Ductile Iron Pipe
Dist	Distance
Dr	Drive
DWG	Drawing
Dwy	Driveway
EA	Each
ECR	End Curb Return
ELEV	Elevation
EL	Elbow
ELEC	Electric
Emb	Embankment
EP	Edge of Pavement
Est.	Estimated
ETW	Edge of Traveled Way
EW	Each Way
Exc	Excavation
Exist	Existing
Exp Jt	Expansion Joint
FCA	*Flanged Coupling Adapter*
Fdn	Foundation
FES	Flared End Section
FF	Filter Fabric
F&G	Frame & Grate
FG	Finished Grade
FH	Fire Hydrant
FL	Flow Line
FLG	Flange(d)
FS	Flow Switch
Ft	Feet or Foot
Ftg	*Footing*
Ga	Gage
GAF	Galvanize After Fabrication
GAL	Gallon
Galv	Galvanized
GPM	Gallons per Minute
GSP	Galvanized Steel Pipe
GV	Gate Valve
H	Height
Horiz	Horizontal
HS	High Strength
HV	*Hose Valve*
HW	Headwall
HWL	High Water Level
Hwy	Highway
IB	Imported Borrow
ID	Inside Diameter
INST	Install
INV	Invert
Irr	Irrigation
JP	Joint Pole
Jt	Joint
L	Length
LB	Pound
LF	Linear Foot
Loc	Location
Ln	Lane
LS	Lump Sum
Lt	Left
LWL	Low Water Level
Max	Maximum
MBGR	Metal Beam Guard Railing
MCC	Motor Control Center
MH	Manhole
MI	Mile(s)
MIN	Minimum
Misc	Miscellaneous
MJ	Mechanical Joint
Mkr	Marker
ML	Match Line
Mod	Modified or Modify
Mon	Monument
Mtl	Material
No	Number
NTS	Not to Scale
Obir	Obilterate
OC	On Center
OD	Outside Diameter
OG	Original Ground
OH	Overhead
PCC	Portland Cement Concrete
Ped	Pedestrian
PG	Profile Grade
PI	Point of Intersection
PL	Plate
P/L	Property Line
PB	Pull Box
POC	Point on Horizontal Curve
POT	Point on Tangent
PP	Power Pole
PRV	Pressure Relief Valve
PVC	Polyvinyl Chloride (Pipe)
Pvmt	Pavement
R	Radius
R&D	*Remove & Dispose*
R&R	Remove & Relocate
R&S	Remove & Salvage
R&W	Remove & Waste
RCP	Reinforced Concrete Pipe
Rd	Road
RD	Relative Density
Reinf	Reinforced or Reinforcing
Rel	Relocate
Ret	Retaining
RP	Reference Point
RR	*Railroad*
RSP	Rock Slope Protection
Rt	Right
Rte	Route
RW	Retaining Wall
R/W	Right of Way
RWD	Redwood
Salv	Salvage
SC	Sand Cushion
SCH	Schedule
SCSP	Sacked Concrete Slope Protection
SD	Storm Drain
Sec	Section
Sep	Separation
SG	Subgrade
Sho	Shoulder
SHT	Sheet
SM	Selected Material
Spec	Special
SPP	Slotted Plastic Pipe
SQFT	Square Foot
SQYD	Square Yard
SST	Stainless Steel
STL	Steel
St	Street
STA	Station
Std	Standard
Surf	Surfacing
SW	Sidewalk or Sound Wall
SWI	Storm Water Inlet
SS	Sanitary Sewer
TBM	*Temporary Bench Mark*
Tbr	Timber
TC	Top of Curb
Temp	Temporary
TG	Top of Grade
Thd	Threaded
TP	Telephone Pole
Trans	Transition
Typ	Typical
Typ Sec	Typical Section
UD	Underdrain
Val	*Valve*
Var	Variable
VCP	Vitrified Clay Pipe
Vert	Vertical
W	Width
W/	With
W/O	Without
WH	Weep Hole
WWM	Welded Wire Mesh
WSP	Welded Steel Pipe
WT	Weight
WM	*Water Meter*
WV	Water Valve
WW	Wing Wall
XFMR	Transformer
Xing	Crossing
X Sec	Cross Section

GENERAL NOTES

1. BEFORE BEGINNING ANY EXCAVATION, THE CONTRACTOR SHALL NOTIFY THE UNDERGROUND SERVICE ALERT SYSTEM (1-800-642-2444) 48 HOURS PRIOR TO COMMENCEMENT OF EXCAVATION.
2. LOCATIONS & DEPTHS OF EXISTING UNDERGROUND PIPELINES ARE APPROXIMATE. CONTRACTOR IS RESPONSIBLE FOR EXACT FIELD LOCATIONS. A MINIMUM OF 6" CLEARANCE BETWEEN PIPES CROSSING UNDERGROUND SHALL BE MAINTAINED WHETHER SHOWN ON DRAWINGS OR NOT. ANY CONFLICTS IN PIPING WILL BE IMMEDIATELY BROUGHT TO THE ATTENTION OF THE ENGINEER.
3. PIPELINES SHALL SLOPE UNIFORMLY BETWEEN ELEVATIONS SHOWN ON PLANS. ALL PIPE ELEVATIONS SHOWN REFER TO THE INVERT UNLESS OTHERWISE SHOWN. UNLESS OTHERWISE SHOWN, ALL PIPELINES SHALL HAVE A MINIMUM COVER OF 36 INCHES.
4. CONTRACTOR SHALL PROVIDE ALL TRAFFIC CONTROL, PAVEMENT *CUTTING, TRENCHING, SHORING, BACKFILL & PAVEMENT* REPLACEMENT IN ACCORDANCE WITH THE LATEST EDITIONS OF THE STANDARD CONSTRUCTION SPECIFICATIONS FOR THE CITY OR COUNTY IN WHICH THE WORK IS BEING DONE.
5. ALL WATER MAINS ARE REQUIRED TO PASS THE PRESSURE, LEAKAGE AND BACTERIOLOGICAL TESTS BEFORE CONNECTION TO THE EXISTING CITY DISTRIBUTION SYSTEM.

EXISTING TOPOGRAPHIC LINES & SYMBOLS

- Building or Foundation
- Shoulder
- Surfaced Road w/Lone Stripe
- Edge of Pavement
- Curb w/Gutter
- Gravel or Dirt Road Drives or Walks
- Trail
- Railroad
- Bridge
- Culvert & Headwalls
- Fence & Gate
- Retaining Wall w/Fence on Top
- Wall
- Guard Rail
- Small Stream or Ditch
- Body of Water
- Orchard, Missing *Trees, Interior Trees*
- Trees
- 27.0 Spot Elevation
- x 27.0 Spot Elevation
- Ground Cover
- Roadside Signs (New & Existing)
- Transmission Tower
- Fire Hydrant
- Power/Utility Pole
- Manhole
- Valve
- Water Meter

Existing Underground Utilities

- W — W — Water
- G — G — Gas
- S — S — Sewer
- E — E — Electric
- T — T — Telephone
- GS — GS — Gasoline
- O — O — Oil
- TV — TV — Television
- SD — SD — *Storm Drain*
- Fiberoptics

CONTROL POINTS

- Horizontal & Vertical Control Point
- Horizontal Control Point
- Vertical Control Point
- *Bench Mark*

NEW CONSTRUCTION & CADASTRAL SYMBOLS

- R/W — Right of Way Lines
- Toe of Slope / Top of Cut — Slope Lines
- Original Ground Line
- State / County / City / Forest / Subdivision, Section, Grant / Rancho — Boundary Line
- 16.0 — Spot Elevation
- Structure (Bridge)
- Fire Hydrant
- Manhole
- Valve

New Underground Utilities

- W — W — Water
- G — G — Gas
- S — S — Sewer
- E — E — *Electric*
- T — T — Telephone
- GS — GS — Gasoline
- O — O — Oil
- TV — TV — Television
- SD — SD — Storm Drain

- ℄ 9 260 1 — Centerline or Layout Lines
- 1 / M-1 — Section Identification Number; Sheet Number Where Section Appears (-- Indicates section located on same page)
- 1 / M-1 — Detail Identification Number; Sheet Number Where Detail Appears (-- Indicates detail located on same page)
- 1 — Detail/Section Identification Number; Non-Referenced Detail
- New Facilities
- *Existing Facilities*
- Fence
- Property Line
- Easement
- New Embankment
- Existing Embankment
- Existing Pipe or Structure to be Abandoned or Removed
- 12" — Tree & Trunk Diameter
- 12" — Tree to be Removed
- *Existing Power Pole*
- Face of Wall — New Wall
- New Guard Railing
- Concrete Barrier
- Double Metal Beam Barrier, Double Thrie Beam Barrier
- Curb Without Gutter
- Curb w/Gutter
- Flared End Section — Ditch Flow Line
- Drainage Inlet — Pipe Culvert
- Headwall Endwall — Pipe Culvert

PIPING SYMBOLS

- Concrete Thrust Block w/Anchor Rod
- Gate Valve, Ball Valve, Globe Valve
- Check Valve
- Split Disc Check Valve
- Solenoid Valve
- Pressure Reducing Valve
- Saunders Diaphragm Valve
- Pressure Relief Valve
- Plug Valve
- Angle Valve
- Butterfly Valve
- Union
- Reducer
- Strainer
- Cleanout
- Pressure Gauge or Switch
- Hose Valve
- Fire or Wharf Hydrant
- Mechanical Joint or Bell & Spigot Fitting
- Flanged Fitting
- Flanged Coupling Adapter
- Flexible Coupling
- Grooved Coupling

REGISTERED PROFESSIONAL ENGINEER — JASON M. COLEMAN — No. C 78366 — Exp. 9/30/2017 — CIVIL — STATE OF CALIFORNIA — 05/25/2017

ABBREVIATIONS, NOTES & SYMBOLS
Construction of Pump Station
East Main Ave. Well No. 1
City of Morgan Hill
Morgan Hill, California

LUHDORFF & SCALMANINI CONSULTING ENGINEERS
500 FIRST STREET
WOODLAND, CALIFORNIA
PHONE: (530) 661-0109

REVISIONS

NO.	DATE	REVISION

DATE: MARCH 2017
JOB NO. : 15-5-068
DESIGN BY: JMC
DRAWN BY: DWT
CHECKED BY: JDF
FILE: G-2.DWG

G-2

CAD FILE: G:/Projects/City of Morgan Hill/15-5-068/Pump Station/G-2.dwg CFG FILE: LSCE2500.PCP_MRG DATE: 05-24-17 9:21am

EAST MAIN AVENUE TEST HOLE LITHOLOGY

Depth	Description
0'	Clayey Gravelly Sand – fine to very coarse sand, subangular to sub–round, gravel up to 1", lithic clasts
57'	Clay with Sand and Gravel – low plasticity, yellowish brown, fine to coarse sand, gravel up to 1/2"
90'	Clayey Gravelly Sand – fine to very coarse sand, subangular to sub–round, gravel up to 1/4", lithic clasts, increasing gravel size up to 1 1/4"
220'	Clay with Sand and Gravel – low plasticity, yellowish brown
230'	Clayey Gravelly Sand – fine to very coarse sand, subangular to sub–round, gravel up to 1 inch
240'	*Sandy Clay – low plasticity, yellowish brown and greenish gray*
350'	

EAST MAIN AVENUE TEST HOLE E-LOG

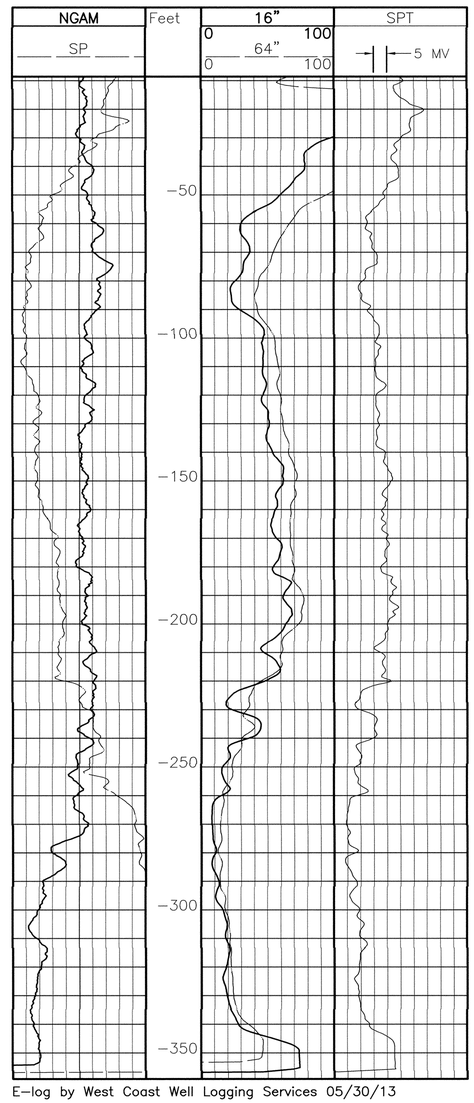

E–log by West Coast Well Logging Services 05/30/13

EAST MAIN AVENUE PRODUCTION WELL PROFILE

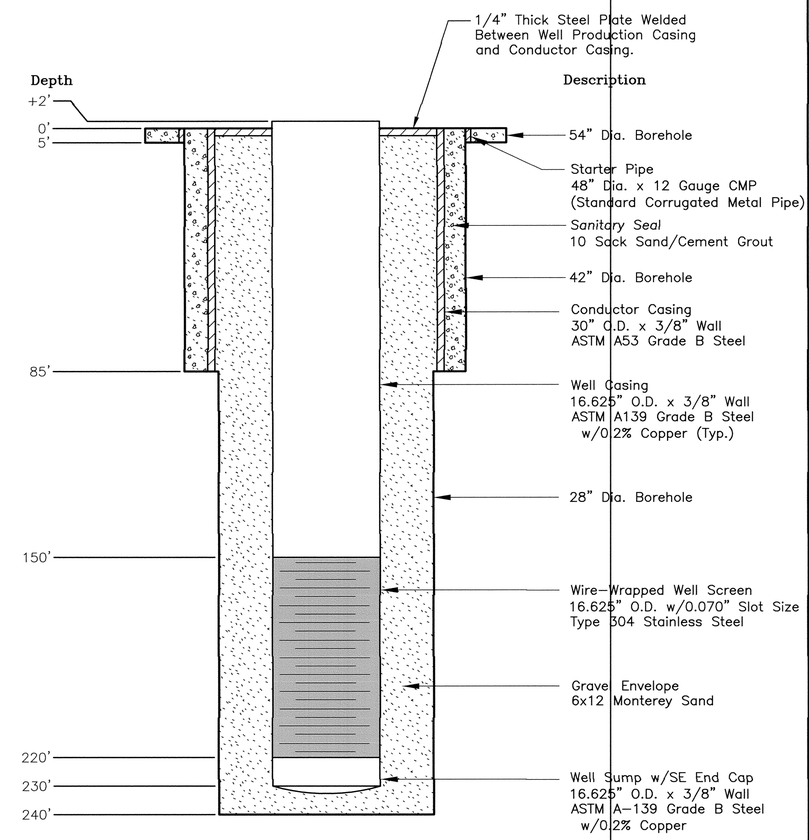

NOTE:

THE DATA PROVIDED ON THIS SHEET IS FOR INFORMATION PURPOSES. SEE SHEET M-1 FOR INFORMATION REGARDING THE PUMP AND PEDESTAL INSTALLATION.

AS-BUILT

REGISTERED PROFESSIONAL ENGINEER
JASON M. COLEMAN
No. C 78366
Exp. 9/30/2017
05/25/2017
CIVIL
STATE OF CALIFORNIA

PRODUCTION WELL PROFILE
Construction of Pump Station
East Main Ave. Well No. 1
City of Morgan Hill
Morgan Hill, California

LUHDORFF & SCALMANINI
CONSULTING ENGINEERS
500 FIRST STREET
WOODLAND, CALIFORNIA
PHONE: (530) 661–0109

REVISIONS		
NO.	DATE	REVISION

DATE: MARCH 2017
JOB NO. : 15–5–068
DESIGN BY: JMC
DRAWN BY: DWT
CHECKED BY: JDF
FILE: G–3.dwg

SHEET:
G-3

CAD FILE: G:/Projects/City of Morgan Hill/15–5–068/Pump Station/G–3.dwg CFG FILE: LSCE2500.PCP_MRG DATE: 03–17–17 8:43am

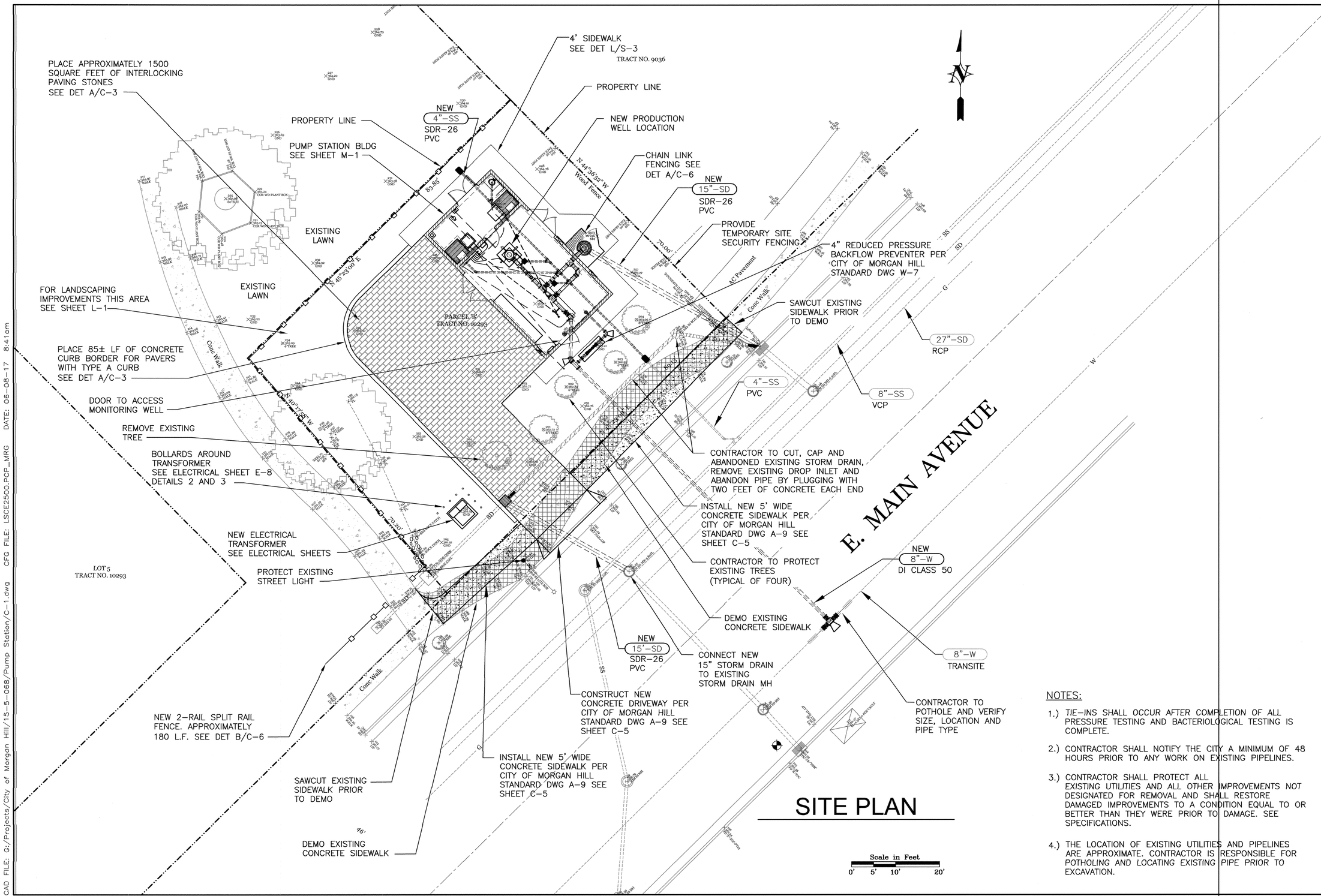

SITE PLAN

NOTES:

1.) TIE-INS SHALL OCCUR AFTER COMPLETION OF ALL PRESSURE TESTING AND BACTERIOLOGICAL TESTING IS COMPLETE.

2.) CONTRACTOR SHALL NOTIFY THE CITY A MINIMUM OF 48 HOURS PRIOR TO ANY WORK ON EXISTING PIPELINES.

3.) CONTRACTOR SHALL PROTECT ALL EXISTING UTILITIES AND ALL OTHER IMPROVEMENTS NOT DESIGNATED FOR REMOVAL AND SHALL RESTORE DAMAGED IMPROVEMENTS TO A CONDITION EQUAL TO OR BETTER THAN THEY WERE PRIOR TO DAMAGE. SEE SPECIFICATIONS.

4.) THE LOCATION OF EXISTING UTILITIES AND PIPELINES ARE APPROXIMATE. CONTRACTOR IS RESPONSIBLE FOR POTHOLING AND LOCATING EXISTING PIPE PRIOR TO EXCAVATION.

REGISTERED PROFESSIONAL ENGINEER
JASON M. COLEMAN
No. C 75366
Exp. 9\30\2017
06/08/2017
CIVIL
STATE OF CALIFORNIA

SITE PLAN – EAST MAIN AVE WELL
Construction of Pump Station
East Main Ave. Well No. 1
City of Morgan Hill
Morgan Hill, California

LUHDORFF & SCALMANINI CONSULTING ENGINEERS
500 FIRST STREET
WOODLAND, CALIFORNIA
PHONE: (530) 661-0109

REVISIONS

NO.	DATE	REVISION

DATE: MAY 2017
JOB NO.: 15-5-068
DESIGN BY: JMC
DRAWN BY: DWT
CHECKED BY: JDF
FILE: C-1.DWG

SHEET:
C-1

CAD FILE: G:/Projects/City of Morgan Hill/15-5-068/Pump Station/C-1.dwg CFG FILE: LSCE2500.PCP_MRG DATE: 06-08-17 8:41am

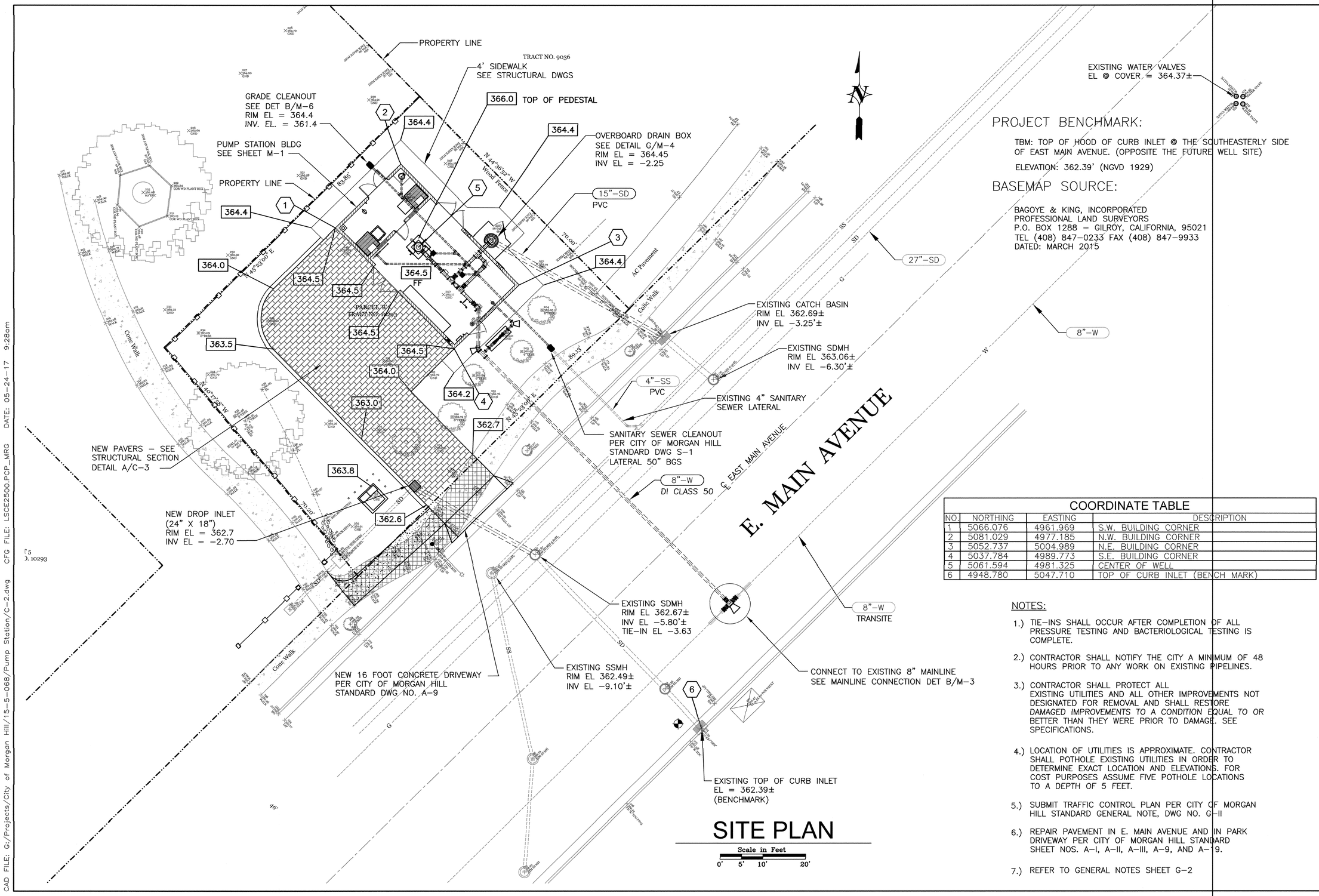

SITE PLAN

Scale in Feet
0' 5' 10' 20'

PROJECT BENCHMARK:

TBM: TOP OF HOOD OF CURB INLET @ THE SOUTHEASTERLY SIDE OF EAST MAIN AVENUE. (OPPOSITE THE FUTURE WELL SITE)

ELEVATION: 362.39' (NGVD 1929)

BASEMAP SOURCE:

BAGOYE & KING, INCORPORATED
PROFESSIONAL LAND SURVEYORS
P.O. BOX 1288 - GILROY, CALIFORNIA, 95021
TEL (408) 847-0233 FAX (408) 847-9933
DATED: MARCH 2015

COORDINATE TABLE

NO.	NORTHING	EASTING	DESCRIPTION
1	5066.076	4961.969	S.W. BUILDING CORNER
2	5081.029	4977.185	N.W. BUILDING CORNER
3	5052.737	5004.989	N.E. BUILDING CORNER
4	5037.784	4989.773	S.E. BUILDING CORNER
5	5061.594	4981.325	CENTER OF WELL
6	4948.780	5047.710	TOP OF CURB INLET (BENCH MARK)

NOTES:

1.) TIE-INS SHALL OCCUR AFTER COMPLETION OF ALL PRESSURE TESTING AND BACTERIOLOGICAL TESTING IS COMPLETE.

2.) CONTRACTOR SHALL NOTIFY THE CITY A MINIMUM OF 48 HOURS PRIOR TO ANY WORK ON EXISTING PIPELINES.

3.) CONTRACTOR SHALL PROTECT ALL EXISTING UTILITIES AND ALL OTHER IMPROVEMENTS NOT DESIGNATED FOR REMOVAL AND SHALL RESTORE DAMAGED IMPROVEMENTS TO A CONDITION EQUAL TO OR BETTER THAN THEY WERE PRIOR TO DAMAGE. SEE SPECIFICATIONS.

4.) LOCATION OF UTILITIES IS APPROXIMATE. CONTRACTOR SHALL POTHOLE EXISTING UTILITIES IN ORDER TO DETERMINE EXACT LOCATION AND ELEVATIONS. FOR COST PURPOSES ASSUME FIVE POTHOLE LOCATIONS TO A DEPTH OF 5 FEET.

5.) SUBMIT TRAFFIC CONTROL PLAN PER CITY OF MORGAN HILL STANDARD GENERAL NOTE, DWG NO. G-11

6.) REPAIR PAVEMENT IN E. MAIN AVENUE AND IN PARK DRIVEWAY PER CITY OF MORGAN HILL STANDARD SHEET NOS. A-1, A-11, A-111, A-9, AND A-19.

7.) REFER TO GENERAL NOTES SHEET G-2

REGISTERED PROFESSIONAL ENGINEER
JASON M. CLEMAN
No. C 78366
Exp. 9\30\2017
05/25/2017
CIVIL
STATE OF CALIFORNIA

GRADING PLAN-EAST MAIN AVE WELL
Construction of Pump Station
East Main Ave. Well No. 1
City of Morgan Hill
Morgan Hill, California

LUHDORFF & SCALMANINI
CONSULTING ENGINEERS
500 FIRST STREET
WOODLAND, CALIFORNIA
PHONE: (530) 661-0109

REVISIONS

NO.	DATE	REVISION

DATE: MAY 2017
JOB NO.: 15-5-068
DESIGN BY: JMC
DRAWN BY: DWT
CHECKED BY: JDF
FILE: C-2.DWG

SHEET:
C-2

CAD FILE: G:/Projects/City of Morgan Hill/15-5-068/Pump Station/C-2.dwg CFG FILE: LSCE2500.PCP_MRG DATE: 05-24-17 9:28am

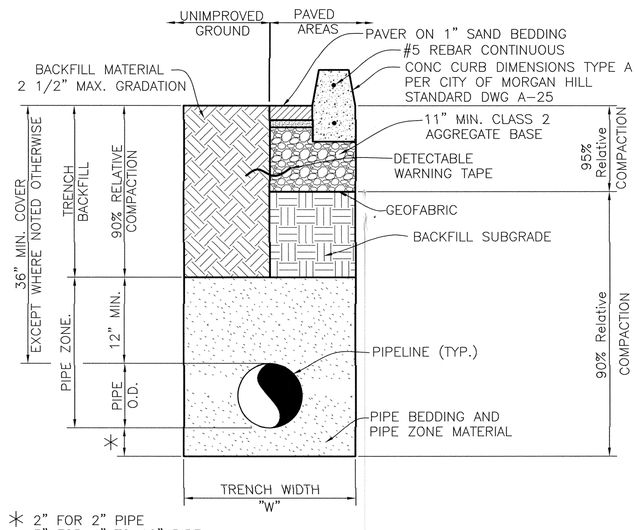

* 2" FOR 2" PIPE
3" FOR 4" TO 10" PIPE
4" FOR 12" TO 21" PIPE
6" FOR 24" TO 36" PIPE

TYPICAL SECTION, TRENCH, PAVER AND CURB

N.T.S.

A / C-2

NOTES:

1.) REFER TO GEOTECHNICAL REPORT (SPECIFICATIONS) FOR TRENCHING AND BACK FILLING

MINIMUM TRENCH WIDTH		
TYPE OF PIPE	OD	W (FT)
RCP	12"–18"	OD + 16"
STEEL	18"–36"	OD + 24"
DIP	18"–36"	OD + 24"
PVC	1"–12"	OD + 8"
PE	2"	OD + 10"
VCP	6"	OD + 12"

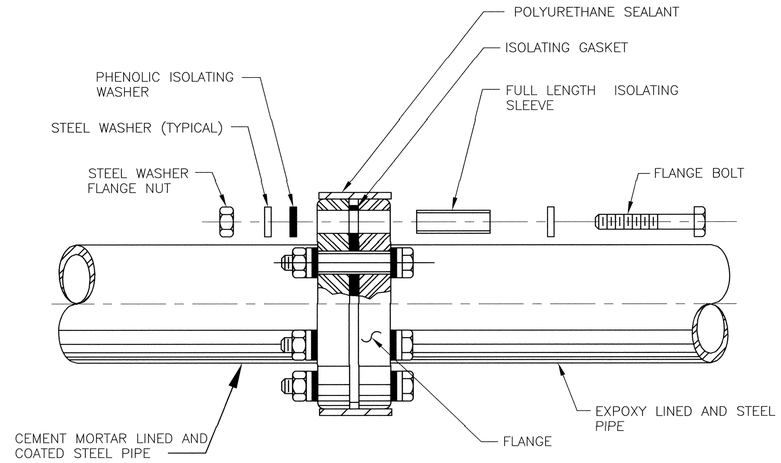

INSULATING FLANGE JOINT

N.T.S.

B / M-7

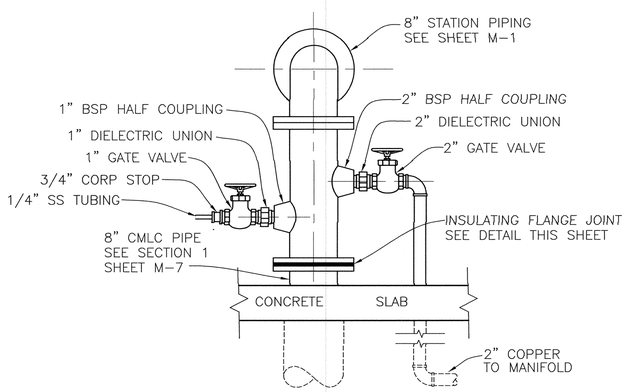

MANIFOLD CONNECTION

N.T.S.

C / M-1

REGISTERED PROFESSIONAL ENGINEER
JASON M. CLEMAN
No. C 78366
Exp. 9/30/2017
05/25/2017
CIVIL
STATE OF CALIFORNIA

CIVIL DETAILS
Construction of Pump Station
East Main Ave. Well No. 1
City of Morgan Hill
Morgan Hill, California

LUHDORFF & SCALMANINI CONSULTING ENGINEERS
500 FIRST STREET
WOODLAND, CALIFORNIA
PHONE: (530) 661-0109

REVISIONS

NO.	DATE	REVISION

DATE: MARCH 2017
JOB NO.: 15-5-068
DESIGN BY: JMC
DRAWN BY: DWT
CHECKED BY: JDF
FILE: C-3.dwg

SHEET:
C-3

CAD FILE: G:/Projects/City of Morgan Hill/15-5-068/Pump Station/C-3.dwg CFG FILE: LSCE2500.PCP_MRG DATE: 05-24-17 9:30am

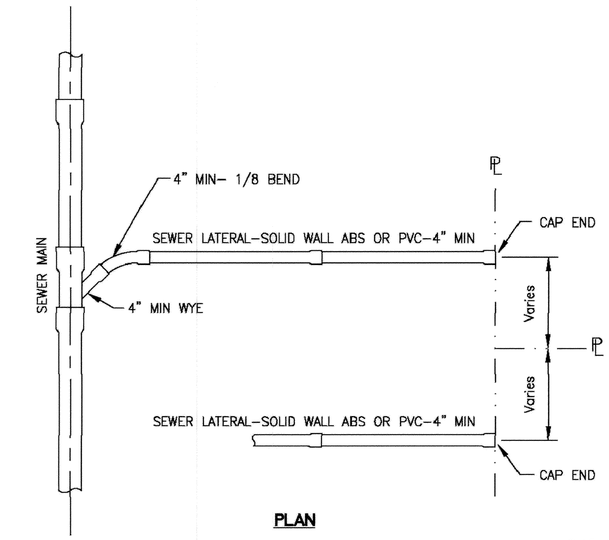

PLAN

NOTES:
1. THE CONCRETE CONTRACTOR SHALL STAMP AN "S" ON THE FACE OF CURB DIRECTLY ABOVE THE LATERAL.
2. FOR ALLOWABLE CONNECTIONS AND FITTINGS TO EX. MAINS, SEE STD. S–3
3. ALL CONNECTIONS SHALL BE MADE ABOVE THE SPRING LINE OF THE SEWER MAIN

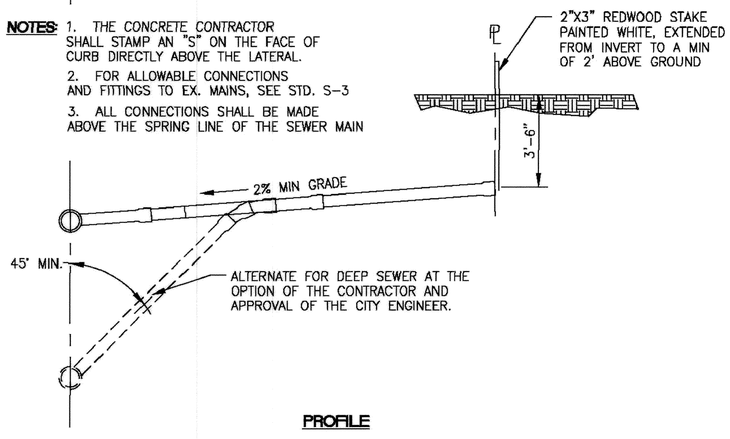

PROFILE

City of Morgan Hill Public Works Department			SEWER LATERAL	DRAWING NO.
CITY ENGINEER	4/1/96 DATE	3/15/07 REVISED		S–2

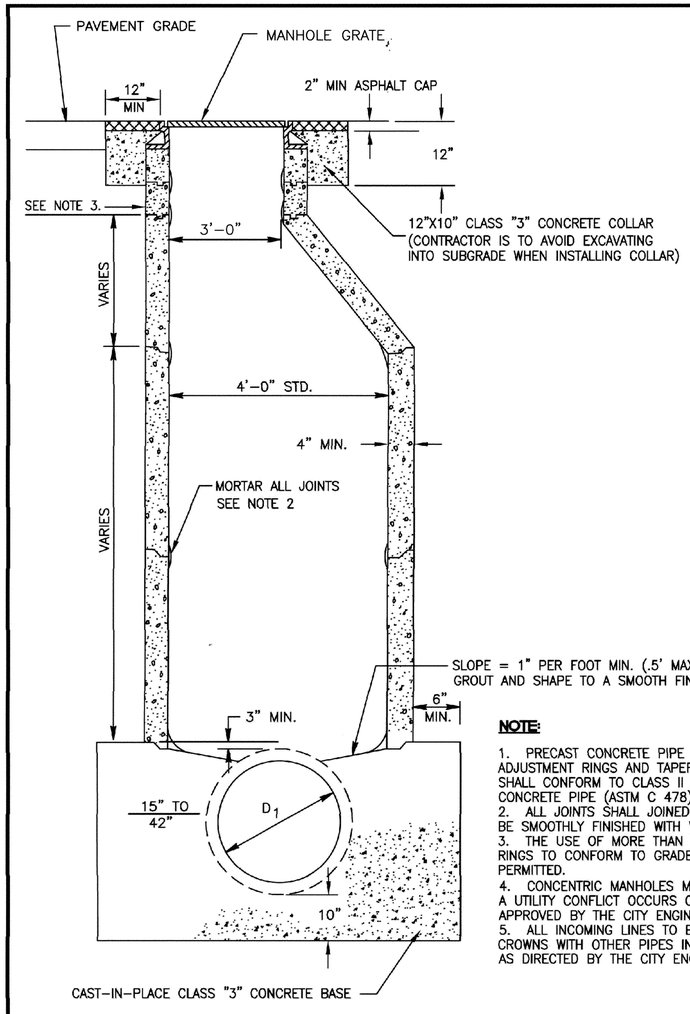

NOTE:

1. PRECAST CONCRETE PIPE SECTIONS, ADJUSTMENT RINGS AND TAPERED SECTIONS SHALL CONFORM TO CLASS II REINFORCED CONCRETE PIPE (ASTM C 478).
2. ALL JOINTS SHALL JOINED WITH "RAMECK" AND BE SMOOTHLY FINISHED WITH WATER PROOF MORTAR.
3. THE USE OF MORE THAN 12" OF ADJUSTING RINGS TO CONFORM TO GRADE SHALL NOT BE PERMITTED.
4. CONCENTRIC MANHOLES MAY BE USED WHEN A UTILITY CONFLICT OCCURS OR WHEN APPROVED BY THE CITY ENGINEER.
5. ALL INCOMING LINES TO BE SET TO MATCH CROWNS WITH OTHER PIPES IN MANHOLE, OR AS DIRECTED BY THE CITY ENGINEER.

City of Morgan Hill Public Works Department			STORM DRAIN MANHOLE PIPE SIZES 15" TO 42"	DRAWING NO.
CITY ENGINEER	4/1/96 DATE	3/15/07 REVISED		SD–1

REGISTERED PROFESSIONAL ENGINEER
JASON M. COLEMAN
No. C 78366
Exp. 9\30\2017
05/25/2017
CIVIL
STATE OF CALIFORNIA

STANDARD DETAILS
Construction of Pump Station
East Main Ave. Well No. 1
City of Morgan Hill
Morgan Hill, California

LUHDORFF & SCALMANINI
CONSULTING ENGINEERS
500 FIRST STREET
WOODLAND, CALIFORNIA
PHONE: (530) 661-0109

REVISIONS

NO.	DATE	REVISION

DATE: MARCH 2017
JOB NO.: 15-5-068
DESIGN BY: JMC
DRAWN BY: DWT
CHECKED BY: JDF
FILE: C-4.dwg

SHEET:
C-4

CAD FILE: G:/Projects/City of Morgan Hill/15-5-068/Pump Station/C-4.dwg CFG FILE: LSCE2500.PCP_MRG DATE: 05-24-17 9:32am