**SPECIFICATION and CONTRACT DOCUMENTS**

**FOR**

# Centennial Recreation Center Expansion Project

CITY OF MORGAN HILL

MORGAN HILL, CALIFORNIA
PUBLIC WORKS DEPARTMENT

PREPARED BY

ENGINEERING DEPARTMENT

JUNE 2019

# NOTICE INVITING BIDS

1. **Bid Acceptance.** The City of Morgan Hill ("City"), will accept sealed bids for its Centennial Recreation Center Expansion ("Project"), by or before August 13, 2019, at 2:30 p.m., at its DEVELOPMENT SERVICES CENTER, located at 17575 PEAK AVENUE MORGAN HILL, California, at which time the bids will be publicly opened and read aloud.

2. **Project Information.**

   **2.1 Location and Description.** The Project is located at 171 W. Edmundson Avenue, Morgan Hill, CA 95037, and the Scope of Work is described as follows:

   - Addition to existing recreation center
   - Installation of landscaping and irrigation
   - Installation of parking lot

   **2.2 Time for Completion.** The planned timeframe for commencement and completion of construction of the Project is: 270 calendar days

3. **License and Registration Requirements.**

   **3.1 License.** This Project requires a valid California contractor's license for the following classification(s): Class B License.

   **3.2 DIR Registration.** City will not accept a Bid Proposal from or enter into the Contract with a bidder, without proof that the bidder and its Subcontractors are registered with the California Department of Industrial Relations ("DIR") to perform public work under Labor Code Section 1725.5, subject to limited legal exceptions.

4. **Contract Documents.** The plans, specifications, bid and contract documents for the Project ("Contract Documents") may be obtained from the City of Morgan Hill, at 17575 Peak Avenue, Morgan Hill, CA, (408) 778-6480. **Electronic copies of the Contract Documents are available on CD for ten dollars ($25.00). If mailing by USPS, a five dollar ($5.00) charge will be added. To download plans and specifications at no charge, register at <u>www.publicpurchase.com</u>.**

5. **Bid Proposal and Security.**

   **5.1 Bid Proposal Form.** Each Bid must be submitted using the Bid Proposal form provided with the Contract Documents.

**5.2 Bid Security.** The Bid Proposal must be accompanied by bid security of ten percent (10%) of the maximum bid amount, in the form of a cashier's or certified check made payable to City of Morgan Hill, or a bid bond executed by a surety licensed to do business in the State of California on the Bid Bond form included with the Contract Documents. The bid security must guarantee that upon award of the bid, the bidder will execute the Contract and submit payment and performance bonds and insurance certificates as required by the Contract Documents within ten (10) days after issuance of the notice of award.

**6. Prevailing Wage Requirements.**

**6.1 General.** This Project is subject to the prevailing wage requirements applicable to the locality in which the Work is to be performed for each craft, classification or type of worker needed to perform the Work, including employer payments for health and welfare, pension, vacation, apprenticeship and similar purposes.

**6.2 Rates.** These prevailing rates are available online at http://www.dir.ca.gov/DLSR. Each Contractor and Subcontractor must pay no less than the specified rates to all workers employed to work on the Project. The schedule of per diem wages is based upon a working day of eight (8) hours. The rate for holiday and overtime work must be at least time and one-half (1/2).

**6.3 Compliance.** The Contract will be subject to compliance monitoring and enforcement by the California Department of Industrial Relations, under Labor Code Section 1771.4.

**7. Performance and Payment Bonds.** The successful bidder will be required to provide performance and payment bonds for one hundred percent (100%) of the Contract Price.

**8. Substitution of Securities.** Substitution of appropriate securities in lieu of retention amounts from progress payments is permitted under Public Contract Code Section 22300.

**9. Subcontractor List.** Each bidder must submit the name, location of the place of business, and California contractor license number and DIR registration number for each Subcontractor who will perform work or service or fabricate or install work for the prime contractor in excess of one-half (1/2) of one percent (1%) of the bid price, using the Subcontractor List form included with the Contract Documents.

10. **Instructions to Bidders.** Additional and more detailed information is provided in the Instructions for Bidders, which should be carefully reviewed by all bidders before submitting a Bid Proposal.

11. **Bidders' Conference.** A bidders' conference will be held on Wednesday, July 10, 2019 at 2:00 p.m., at the following location: 17575 Peak Avenue Morgan Hill, CA 95037 for the purpose of acquainting all prospective bidders with the Contract Documents and the Worksite. **The bidders' conference is mandatory.** A bidder who fails to attend a mandatory bidders' conference may be disqualified from bidding.

**2.3 Estimated Cost.** The estimated construction cost is $2,550,000

By: Irma Torrez Date: June 21, 2019

Publication Dates: 1) June 28, 2019 2) July 5, 2019

END OF NOTICE INVITING BIDS

# INSTRUCTIONS TO BIDDERS

Each Bid Proposal submitted to the City of Morgan Hill ("City") for its Centennial Recreation Center Expansion Project ("Project") must be submitted in accordance with the following instructions and requirements:

## 1. Bid Submission.

**1.1 General.** Each bid "(Bid Proposal") must be signed, sealed and submitted to City, using the form provided in the Contract Documents, by or before the date and time set forth in the Notice Inviting Bids, or as amended by subsequent addendum. Faxed or emailed Bid Proposals will not be accepted, unless otherwise specified. Late submissions will be returned unopened. City reserves the right to postpone the date and time for receiving or opening bids. Each bidder is solely responsible for all of its costs to prepare and submit its bid and by submitting a bid waives any right to recover those costs from City. The bid price(s) must include all costs to perform the Work as specified, including all indirect costs such as applicable taxes, insurance and field offices.

**1.2 Bid Envelope.** The envelope containing the sealed Bid Proposal and required attachments must be clearly labeled as follows:

BID PROPOSAL
Morgan Hill DSC
Centennial Recreation Center Expansion Project
City of Morgan Hill
17575 Peak Avenue
Morgan Hill, CA 95037
Attention: Bid Opening
Bid Date:_____
Bid Time: _____

The envelope must also be clearly labeled, as follows, with the bidder's name, address, and its registration number with the California Department of Industrial Relations ("DIR") for bidding on public works contracts (Labor Code sections 1725.5 and 1771.1):

*[Contractor company name]*
*[Street address]*
*[City, state, zip code]*
DIR Registration No._____

Please note: If City is unable to confirm that the bidder's DIR registration is current, City must disqualify the bidder and return its bid unopened (Labor Code section 1725.5).

2. **Examination of Contract Documents and Project Site.** Each bidder is solely responsible for diligent and thorough review of the Contract Documents (as defined in the General Conditions), examination of Project site, and reasonable and prudent inquiry concerning known and potential site conditions prior to submitting a Bid Proposal. However, bidders should not enter onto City's property or the Project site without prior written authorization from City. Bidders are responsible for reporting any errors or omissions in the Contract Documents to City prior to submitting a Bid Proposal, subject to the limitations of Public Contract Code Section 1104. City expressly disclaims responsibility for assumptions the bidder might draw from the presence or absence of information provided by City.

3. **Requests for Information.** Questions regarding the Project, the bid procedures or any of the Contract Documents must be submitted in writing to yat.cho@morganhill.ca.gov

4. **Addenda.** Any addenda issued prior to the bid opening are part of the Contract Documents. Subject to the limitations of Public Contract Code section 4104.5, City reserves the right to issue addenda prior to bid time.

5. **Brand Designations and "Or Equal" Substitutions.** Any specification designating a material, product, thing, or service by specific brand or trade name, followed by the words "or equal," is intended only to indicate quality and type of item desired, and bidders may request use of any equal material, product, thing, or service. All data substantiating the proposed substitute as an "equal" item must be submitted with the written request for substitution. This provision does not apply to materials, products, things, or services that may lawfully be designated by a specific brand or trade name under Public Contract Code Section 3400(c).

   **5.1 Pre-Bid Requests.** Any request for submission made before the Contract is awarded must be submitted to the City Engineer at least ten (10) days before the opening of bids so that all interested bidders may be notified of any approved alternative.

   **5.2 Post-Award Requests.** After the Contract is awarded, Contractor may submit a substitution within fourteen (14) days after the date of award of the Contract, or as specified in the Special Conditions.

6. **Bidders Interested in More Than One Bid.** No person, firm, or corporation may submit or be a party to more than one (1) Bid Proposal unless alternate bids are specifically called for. However, a person, firm, or corporation that has submitted a subcontract proposal or quote to a bidder may submit subcontract proposals or quotes to other bidders.
7. **Bid Proposal Form and Enclosures.** Each Bid Proposal must be completed in ink using the Bid Proposal form included in the Contract

Documents. The Bid Proposal form should be fully completed without interlineations, alterations, or erasures. Any necessary corrections must be clear and legible, and must be initialed by the bidder's authorized representative. A Bid Proposal submitted with terms such as "negotiable," "will negotiate," or similar, will be considered non-responsive. Each Bid Proposal must be accompanied by bid security, as set forth in Section 9 below, and by the completed Subcontractor List, and Non-Collusion Declaration using the forms included in the Contract Documents.

8. **Authorization and Execution.** Each Bid Proposal must be signed by the bidder's authorized representative. A Bid Proposal submitted by a partnership must be signed in the partnership name by a general partner with authority to bind the partnership. A Bid Proposal submitted by a corporation must be signed with the legal name of the corporation, followed by the signature and title of two (2) officers of the corporation with full authority to bind the corporation to the terms of the Bid Proposal, under California Corporation Code section 313.

9. **Bid Security.** Each Bid Proposal must be accompanied by bid security of ten percent (10%) of the maximum bid amount, in the form of a cashier's check, a certified check, or a bid bond, using the form included in the Contract Documents, executed by a surety licensed to do business in the State of California, made payable to City. The bid security must guarantee that upon award of the bid, the bidder will execute and submit the Contract on the form included in the Contract Documents, will submit payment and performance bonds one hundred percent (100%) of the maximum Contract Price, and will submit the insurance certificates and endorsements as required by the Contract Documents within ten (10) days after issuance of the notice of award.

10. **Withdrawal of Bid Proposals.** A Bid Proposal may not be withdrawn for a period of ninety (90) days after the bid opening without forfeiture of the bid security, except as authorized for material error under Public Contract Code Section 5100 et seq.

11. **Bid Protest.** Any bid protest must be in writing and received by City at the City Attorney's Office at 17575 Peak Avenue, Morgan Hill, CA, (Fax: (408) 779-1592), before 5:00 p.m. no later than two (2) working days following bid opening (the "Bid Protest Deadline") and must comply with the following requirements:

    **11.1 General.** Only a bidder who has actually submitted a Bid Proposal is eligible to submit a bid protest against another bidder. Subcontractors are not eligible to submit bid protests. A bidder may not rely on the bid protest submitted by another bidder, but must timely pursue its own protest. If required by City, the protesting bidder must submit a non-refundable fee in

the amount specified by City, based upon City's reasonable costs to administer the bid protest. Any such fee must be submitted to City no later than the Bid Protest Deadline, unless otherwise specified. For purposes of this Section 11, a "working day" means a day that City is open for normal business, and excludes weekends and holidays observed by City.

**11.2 Protest Contents.** The bid protest must contain a complete statement of the basis for the protest and all supporting documentation. Material submitted after the Bid Protest Deadline will not be considered. The protest must refer to the specific portion or portions of the Contract Documents upon which the protest is based. The protest must include the name, address, email address, and telephone number of the person representing the protesting bidder if different from the protesting bidder.

**11.3 Copy to Protested Bidder.** A copy of the protest and all supporting documents must be concurrently transmitted by fax or by email, by or before the Bid Protest Deadline, to the protested bidder and any other bidder who has a reasonable prospect of receiving an award depending upon the outcome of the protest.

**11.4 Response to Protest.** The protested bidder may submit a written response to the protest, provided the response is received by City before 5:00 p.m., within two (2) working days after the Bid Protest Deadline or after actual receipt of the bid protest, whichever is sooner (the "Response Deadline"). The response must include all supporting documentation. Material submitted after the Response Deadline will not be considered. The response must include the name, address, email address, and telephone number of the person representing the protested bidder if different from the protested bidder.

**11.5 Copy to Protesting Bidder.** A copy of the response and all supporting documents must be concurrently transmitted by fax or by email, by or before the Response Deadline, to the protesting bidder and any other bidder who has a reasonable prospect of receiving an award depending upon the outcome of the protest.

**11.6 Exclusive Remedy.** The procedure and time limits set forth in this section are mandatory and are the bidder's sole and exclusive remedy in the event of bid protest. A bidder's failure to comply with these procedures will constitute a waiver of any right to further pursue a bid protest, including filing a Government Code Claim or initiation of legal proceedings.

**11.7 Right to Award.** City reserves the right to award the Contract to the bidder it has determined to be the responsible bidder submitting the lowest responsive bid, and to issue a notice to proceed with the Work notwithstanding any pending or continuing challenge to its determination.

12. **Rejection of Bids; Award of Contract.** City reserves the right, acting in its sole discretion, to waive immaterial bid irregularities, the right to accept or reject any and all bids, or to abandon the Project entirely. The Contract will be awarded, if at all, within ninety (90) days after opening of bids or as otherwise specified in the Special Conditions, to the responsible bidder that submitted the lowest responsive bid.

13. **Bonds.** The successful bidder is required to submit payment and performance bonds as specified in the Contract Documents using the bond forms included in the Contract Documents. All required bonds must be calculated on the maximum total Contract price as awarded, including additive alternates, if applicable.

14. **Evidence of Responsibility.** Within twenty four (24) hours following a request by City, a bidder must submit to City satisfactory evidence showing the bidder's financial resources, the bidder's experience in the type of work being required by City, the bidder's organization available for the performance of the Contract and any other required evidence of the bidder's qualifications to perform the proposed Contract. City may consider such evidence before making its decision awarding the proposed Contract.

15. **License(s).** The successful bidder and its Subcontractor(s) must possess the California contractor's license(s) in the classification(s) required by law to perform the Work.

16. **Taxes.** The bid price must include all applicable federal, state, and local taxes.

17. **Ineligible Subcontractor.** Any Subcontractor who is ineligible to perform work on a public works project under Labor Code Sections 1777.1 or 1777.7 is prohibited from performing work on this Project.

18. **Subcontract Limitation.** The successful bidder may not subcontract out more than fifty percent (50%) of the original total contract price, except that any items of work in the Engineer's Estimate designated "Specialty Items" may be performed by subcontract and the value of the work may be deducted from the original total contract price before computing the amount of work required to be performed by Contractor's own forces. When items of work in the Engineer's Estimate are preceded by the letters (S) or (S-F), those items are designated as "Specialty Items." Where an entire item is subcontracted, the value of work subcontracted will be based on the contract item bid price. When a portion of an item is subcontracted, the value of work subcontracted will be determined by the Engineer based on the estimated percentage of the contract item bid price.

**19. DIR Registration.** City will not accept a Bid Proposal from or enter into the Contract with a bidder, without proof that the bidder and its Subcontractors are registered with the DIR to perform public work under Labor Code Section 1725.5, subject to limited legal exceptions.

**20. Bid Schedule.** Bidders are required to fully complete the Bid Schedule form accompanying the Bid Proposal form with unit prices as indicated, and to submit the completed Bid Schedule with their Bid Proposal.

**20.1 Incorrect Totals.** In the event of a computational error for any bid item (base bid or alternate) resulting in an incorrect extended total for that item, the submitted base bid or bid alternate total will be adjusted to reflect the corrected amount (estimated quantity X unit cost), unless the cumulative amount of correction changes the total amount of the base bid or bid alternate by more than five percent (5%). In the event of a discrepancy between the actual total of the itemized or unit prices shown on the Bid Schedule for the base bid, and the amount entered as the base bid on the Bid Proposal form, the actual total of the itemized or unit prices shown on the Bid Schedule for the base bid will be deemed the base bid price. Likewise, in the event of a discrepancy between the actual total of the itemized or unit prices shown on the Bid Schedule for any bid alternate, and the amount entered for the alternate on the Bid Proposal form, the actual total of the itemized prices shown on the Bid Schedule for that alternate will be deemed the alternate price. Nothing in this provision is intended to prevent a bidder from requesting to withdraw its bid for material error under Public Contract Code Section 5100 et seq.

**20.2 Estimated Quantities.** The quantities shown on the Bid Schedule are estimated and the actual quantities required to perform the Work may be greater or less than the estimated amount. The Contract Price will be adjusted to reflect the actual quantities required for the Work based on the itemized or unit prices provided in the Bid Schedule, with no allowance for anticipated profit for quantities that are deleted or decreased.

**20.3 Bidder's Questionnaire.** A completed, signed Bidder's Questionnaire using the form provided with the Contract Documents and including all required attachments must be submitted within 48 hours following a request by City. A bid that does not fully comply with this requirement may be rejected as nonresponsive. A bidder who submits a Bidder's Questionnaire which is subsequently determined to contain false or misleading information, or material omissions, may be disqualified as non-responsible.

END OF INSTRUCTIONS TO BIDDERS

# BID PROPOSAL

CENTENNIAL RECREATION CENTER EXPANSION PROJECT

_____ ("Bidder") hereby submits this Bid Proposal to the City of Morgan Hill ("City") for the above-referenced project ("Project") in response to the Notice Inviting Bids and in accordance with the Contract Documents referenced therein.

1. **Base Bid.** Bidder proposes to perform and fully complete the Work for the Project as specified in the Contract Documents, within the time required for full completion of the Work, for the following price ("Base Bid"):
   $ _____.

2. **Addenda.** Bidder acknowledges receipt of the following addenda:

| Addendum: | Date Received: | Addendum: | Date Received: |
|---|---|---|---|
| #01 | _____ | #05 | _____ |
| #02 | _____ | #06 | _____ |
| #03 | _____ | #07 | _____ |
| #04 | _____ | #08 | _____ |

3. **Bidder's Warranties.** By signing and submitting this Bid Proposal, Bidder warrants the following:

   **3.1 Examination of Contract Documents.** Bidder has thoroughly examined the Contract Documents, and represents that, to the best of Bidder's knowledge there are no errors, omissions, or discrepancies in the Contract Documents subject to the limitations of Public Contract Code Section 1104.

   **3.2 Examination of Worksite.** Bidder has had the opportunity to examine the Worksite and local conditions at the Project location.

   **3.3 Bidder is Qualified.** Bidder is fully qualified to perform the Work.

   **3.4 Responsibility for Bid.** Bidder has carefully reviewed this Bid Proposal and is solely responsible for any errors or omissions contained in its completed Bid.

4. **Award of Contract** . By signing and submitting this Bid Proposal, Bidder agrees that if Bidder is awarded the Contract for the Project, that within ten (10) days following issuance of the notice of award to Bidder, Bidder will do all of the following:

**4.1 Execute Contract.** Enter into the Contract with City in accordance with the terms of this Bid Proposal, by signing and submitting to City the Contract prepared by City using the form included with the Contract Documents;

**4.2 Submit Required Bonds.** Submit to City a payment bond and a performance bond, each for one hundred percent (100%) of the Contract Price, using the bond forms provided and in accordance with the requirements of the Contract Documents; and

**4.3 Insurance Requirements.** Submit to City the insurance certificate(s) and endorsement(s) as required by the Contract Documents.

**5. Wage Theft Prevention**. All Bidders are expected to have read and understand the "Wage Theft Prevention Policy" adopted by the City Council on July 26, 2017.

The undersigned Bidder certifies that neither Bidder nor its principals have been found by a final court judgement or final administrative action of an investigatory agency to have violated federal, state or local wage and hour laws within the past five years from the date of the submitted bid. Bidder or its principals who are unable to so certify, must disclose wage and hour violations, and shall provide a copy of (i) the court order and judgment and/or final administrative decision; and (ii) documents demonstrating either that the order/judgment has been satisfied, or if the order/judgment has not been fully satisfied, a written and signed description of Bidder's efforts to date to satisfy the order/judgment. Signing this bid shall constitute signature of this Certification.

The City, at its sole discretion, may disqualify a bidder based on one or more disclosed judgments consistent with the criteria set forth in the Policy.

**6. Bid Security.** As a guarantee that if awarded the Contract, it will perform its obligations under Section 4, above, Bidder is enclosing bid security in the amount of ten percent (10%) of its maximum bid amount in the following form:

____ A cashier's check or certified check payable to City of Morgan Hill and issued by _____ Bank in the amount of $_____.

____ A bid bond, using the Bid Bond form included with the Contract Documents, payable to City of Morgan Hill and executed by a surety licensed to do business in the State of California.

This Bid Proposal is hereby submitted on _____, 20__:

s/ _____ _____
Name and Title [print]

s/ _____ _____
Name and Title [print]

_____ _____
Company Name License # and Classification

_____
DIR Registration #

_____ _____
Address Phone

_____ _____
City, State, Zip Fax

END OF BID PROPOSAL

**1. Iran Contracting Act.** Bidder certifies that it is not identified on a list created under the Iran Contracting Act, Public Contract Code 2200 et seq. (the "Act") as a person engaging in investment activities in Iran, as defined in the Act, or is otherwise expressly exempt under the Act.

## BID SCHEDULE I – GENERAL

## CENTENNIAL RECREATION CENTER EXPANSION PROJECT

**This Bid Schedule must be completed in ink and must be included with the sealed Bid Proposal. The unit cost for each item must be inclusive of all costs, whether direct or indirect, including profit and overhead. The sum of all amounts entered in the "Extended Total" column must be identical to the Base Bid price entered in Section 1 of the Bid Proposal Form. Quantities shown are required for bid purposes and may or may not be final pay quantities. Actual quantities, if different, must be substantiated during the Project by the Contractor (either by field measurement, trucking tags, or other means acceptable to the Engineer).**

| Bid Item | Description of Bid Item | Approximate Quantity/Unit of Measure | Unit Price | Extended Total |
|---|---|---|---|---|
| 1 | Centennial Recreation Center Expansion | 1 LS | | |
| 2 | Irrigation and Landscaping | 1 LS | | |
| 3 | Parking Lot | 1 LS | | |
| 4 | Supplemental Work | 1 LS | $100,000 | $100,000 |
| | | | | |

| | |
|---|---|
| Bid Schedule I Total | |

END OF BID SCHEDULE

## SUBCONTRACTOR LIST

For each Subcontractor who will perform a portion of the Work in an amount in excess of one-half of 1% of the Bidder's total Contract Price,[1] the bidder must list a description of the work, the name of the Subcontractor, its California contractor license number, the location of its place of business, and DIR registration number. **Bidders: Please print legibly. Illegible forms may be rejected.**

| DESCRIPTION OF WORK | SUBCONTRACTOR NAME | CALIFORNIA CONTRACTOR LICENSE NUMBER | DIR REG. NO. | LOCATION OF BUSINESS | LOCAL VENDOR[2] YES/NO |
|---|---|---|---|---|---|
| | | | | | |
| | | | | | |
| | | | | | |
| | | | | | |
| | | | | | |
| | | | | | |
| | | | | | |
| | | | | | |
| | | | | | |
| | | | | | |
| | | | | | |
| | | | | | |
| | | | | | |
| | | | | | |

END OF SUBCONTRACTOR LIST

[1] For street or highway construction this requirement applies to any subcontract of $10,000 or more.
[2] A Subcontractor is considered local if its principle place of business is within the city limits of Morgan Hill.

# NONCOLLUSION DECLARATION

(To be executed by bidder and submitted with bid)

| | | |
|---|---|---|
| State of California<br><br>County of _____ | )<br>)<br>) | ss. |

The undersigned declares:

I am the _____ [title] of _____ [business name], the party making the foregoing bid.

The bid is not made in the interest of, or on behalf of, any undisclosed person, partnership, company, association, organization, or corporation. The bid is genuine and not collusive or sham. The bidder has not directly or indirectly induced or solicited any other bidder to put in a false or sham bid. The bidder has not directly or indirectly colluded, conspired, connived, or agreed with any bidder or anyone else to put in a sham bid, or to refrain from bidding. The bidder has not in any manner, directly or indirectly, sought by agreement, communication, or conference with anyone to fix the bid price of the bidder or any other bidder, or to fix any overhead, profit, or cost element of the bid price, or of that of any other bidder. All statements contained in the bid are true. The bidder has not, directly or indirectly, submitted his or her bid price or any breakdown thereof, or the contents thereof, or divulged information or data relative thereto, to any corporation, partnership, company, association, organization, bid depository, or to any member or agent thereof, to effectuate a collusive or sham bid, and has no paid and will not pay, any person or entity for such purpose.

This declaration is intended to comply with California Public Contract Code Section 7106 and Title 23 U.S.C Section 112.

I declare under penalty of perjury under the laws of the State of California that the foregoing is true and correct and that this declaration is executed on _____ [date], at _____ [city], _____ [state].

s/_____

_____
Name [print]

**CALIFORNIA ALL-PURPOSE ACKNOWLEDGMENT** CIVIL CODE ' 1189

A notary public or other officer completing this certificate verifies only the identity of the individual who signed the document, to which this certificate is attached, and not the truthfulness, accuracy, or validity of that document.

State of **CALIFORNIA** )

County of SANTA CLARA )

On _____, before me, _____

a Notary Public in and for said County and State, personally appeared

_____

_____

proved to me on the basis of satisfactory evidence to be the person/s whose name/s is/are subscribed to the within instrument and acknowledged to me that he/she/they executed the same in his/her/their authorized capacity/ies, and that by his/her/their signature/s on the instrument the person/s, or the entity upon behalf of which the person/s acted, executed the instrument.

I certify under PENALTY OF PERJURY under the laws of the State of California that the foregoing paragraph is true and correct.

WITNESS my hand and official seal.

_____

SIGNATURE OF NOTARY PUBLIC

Place Notary Seal Above

# BID BOND

_____ ("Bidder") has submitted a bid, dated _____, 20_____ ("Bid"), to the City of Morgan Hill ("City") for work on the Centennial Recreation Center Expansion Project ("Project"). Under this duly executed bid bond ("Bid Bond"), Bidder as Principal and _____, its surety ("Surety"), are bound to City as obligee in the penal sum of ten percent (10%) of the maximum amount of the Bid (the "Bond Sum"). Bidder and Surety bind themselves and their respective heirs, executors, administrators, successors and assigns, jointly and severally, as follows:

**1. General.** If Bidder is awarded the Contract for the Project, Bidder will enter into the Contract with City in accordance with the terms of the Bid.

**2. Submittals.** Within ten (10) days following issuance of the notice of award to Bidder, Bidder must submit to City the following:

**2.1 Contract.** The executed Contract, using the form provided by City in the Project contract documents ("Contract Documents");

**2.2 Payment Bond.** A payment bond for one hundred percent (100%) of the maximum Contract Price, executed by a surety licensed to do business in the State of California using the Payment Bond form included with the Contract Documents;

**2.3 Performance Bond.** A performance bond for one hundred percent (100%) of the maximum Contract Price, executed by a surety licensed to do business in the State of California using the Performance Bond form included with the Contract Documents; and

**2.4 Insurance.** The insurance certificate(s) and endorsement(s) required by the Contract Documents, and any other documents required under the Instructions for Bidders.

**3. Enforcement.** If Bidder fails to execute the Contract and to submit the bonds and insurance certificates as required by the Contract Documents, Surety guarantees that Bidder forfeits the Bond Sum to City. Any notice to Surety may be given in the manner specified in the Contract and delivered or transmitted to Surety as follows:

Attn: _____
Address: _____
City/State/Zip: _____
Phone: _____

Fax: _____
Email: _____

4. **Duration; Waiver.** If Bidder fulfills its obligations under Section 2, above, then this obligation will be null and void; otherwise it will remain in full force and effect for ninety (90) days following award of the Contract or until this Bid Bond is returned to Bidder, whichever occurs first. Surety waives the provisions of Civil Code Sections 2819 and 2845.

This Bid Bond is entered into and is effective on _____, 20_____.

SURETY:

_____

s/ _____

Name: _____

Title: _____

(Attach Acknowledgement, Notary Seal, and Attorney-In-Fact Certificate)

CONTRACTOR:

_____

s/ _____

Name: _____

Title: _____

**APPROVED AS TO FORM:**

By:_____
Donald A. Larkin, City Attorney

Date:_____

## BIDDER'S QUESTIONNAIRE

## CENTENNIAL RECREATION CENTER EXPANSION PROJECT

Within forty eight (48) hours following a request by City, a bidder must submit to City a completed, signed Bidder's Questionnaire using this form and including all required attachments. City may request the Questionnaire from one (1) or more of the apparent low bidders following the bid opening, and may use the completed Questionnaire to evaluate a bidder's qualifications for this Project. The Questionnaire must be filled out completely, accurately, and legibly. Any errors, omissions, or misrepresentations in completion of the Questionnaire may be grounds for rejection of the bid or termination of a Contract awarded pursuant to the bid.

### Part 1: General Information

Bidder Business Name: _____ ("Bidder")

Check One: ___ Corporation
___ Partnership
___ Sole Proprietorship
___ Joint Venture of:_____
___ Other:_____

Address: _____

_____

Phone: _____

Fax: _____

Owner of Company: _____

Contact Person: _____

Email:_____

Bidder's California Contractor's License Number(s):
_____

### Part 2: Bidder Experience

1. How many years has Bidder been in business under its present business name? _____

2. Has Bidder completed projects similar in type and size to this Project as a general contractor? _____

3. Has Bidder ever been disqualified on grounds that it is not responsible? If yes, provide additional information on a separate sheet of paper regarding the disqualification, including the name and address of the agency or owner of the subject project, the type and size of the project, the reasons that Bidder was disqualified as not responsible, and the month and year in which the disqualification occurred.

4. Has Bidder ever been terminated from a construction project, either as a general contractor or as a subcontractor? If yes, provide additional information on a separate sheet of paper regarding the termination, including the name and address of the agency or owner of the subject project, the type and size of the project, whether Bidder was under contract as a general contractor or a subcontractor, the reasons that Bidder was terminated, and the month and year in which the termination occurred.

5. Provide information about Bidder's past projects performed as general contractor as follows:

5.1 Six (6) most recently completed public works projects within the last three (3) years;

5.2 Three (3) largest completed projects within the last three (3) years; and

5.3 Any project which is similar to this Project.

6. Use separate sheets of paper provide all of the following information for <u>each</u> project identified in response to the above three (3) categories:

6.1 Project name
6.2 Location
6.3 Owner
6.4 Owner contact (name and current phone number)
6.5 Architect or engineer name
6.6 Architect or engineer contact (name and current phone number)
6.7 Project manager (name and current phone number)
6.8 Description of project, scope of work performed
6.9 Initial contract value (at time of bid award)
6.10 Final cost of construction (including change orders)
6.11 Original scheduled completion date
6.12 Time extensions granted (number of days)
6.13 Actual date of completion
6.14 Number and amount of stop notices or mechanic's liens filed

6.15 Amount of liquidated damages assessed against Bidder
6.16 Nature and resolution of any claim, lawsuit, and/or arbitration between Bidder and the owner.

**Part 3: Verification**

In signing this document, I, the undersigned, declare that I am duly authorized to sign and submit this Bidder's Questionnaire on behalf of the named bidder, and that all responses and information set forth in this Bidder's Questionnaire and accompanying attachments are, to the best of my knowledge, true, accurate and complete as of the date of submission. **I declare under penalty of perjury under the laws of the State of California that the foregoing is true and correct.**

Signature: _____ Date: _____

By [name, title]: _____

END OF BIDDER'S QUESTIONNAIRE

# CONTRACT

This public works contract ("Contract") is entered into by and between the City of Morgan Hill ("City") and _____ ("Contractor") for work on the Centennial Recreation Center Expansion Project ("Project").

The parties agree as follows:

**1.** **Award of Contract**. In response to the Notice Inviting Bids, Contractor has submitted a Bid Proposal to perform work on the Project, and on _____, 20___, (contract date) City authorized award of this Contract to Contractor for the amount of Contractor's bid.

**2.** **Contract Documents**. The Contract Documents incorporated into this Contract include and are comprised of all of the following:

**2.1** Notice Inviting Bids;
**2.2** Instructions to Bidders;
**2.3** Addenda, if any;
**2.4** Bid Proposal and attachments thereto;
**2.5** Contract;
**2.6** Payment and Performance Bonds;
**2.7** General Conditions;
**2.8** Special Conditions;
**2.9** Project Drawings and Specifications;
**2.10** Change Orders, if any;
**2.11** Notice of Award;
**2.12** Notice to Proceed;
**2.13** And the following: City Standards_____

**3.** **Contractor's Obligations.** Contractor agrees to perform all of the Work required for the Project, as specified in the Contract Documents. Contractor must provide, furnish, and supply all things necessary and incidental for the timely performance and completion of the Work, including all necessary labor, materials, equipment, transportation, and utilities, unless otherwise specified in the Contract Documents. Contractor must use its best efforts to complete the Work in a professional and expeditious manner and to meet or exceed the performance standards required by the Contract Documents.

4. **Payment.** As full and complete compensation for Contractor's timely performance and completion of the Work in strict accordance with the terms and conditions of the Contract Documents, City will pay Contractor _____ Dollars ($_____) (the "Contract Price"), in accordance with the payment provisions in the General Conditions. The Contract Price includes all applicable federal, state, and local taxes.

5. **Time for Completion.** Contractor will fully complete the Work for the Project within Two-Hundred-Seventy calendar days from the commencement date given in the Notice to Proceed ("Contract Time"). By signing below, Contractor expressly waives any claim for delayed early completion.

6. **Liquidated Damages.** If Contractor fails to complete the Work within the Contract Time, City will assess liquidated damages in the amount of One-Thousand-Dollars ($1,000.00) for each day of unexcused delay in completion, and the Contract Price will be reduced accordingly.

7. **Labor Code Compliance.**

   7.1 **General.** This Contract is subject to all applicable requirements of Chapter 1 of Part 7 of Division 2 of the Labor Code, including requirements pertaining to wages, working hours and workers' compensation insurance.

   7.2 **Prevailing Wages.** This Project is subject to the prevailing wage requirements applicable to the locality in which the Work is to be performed for each craft, classification or type of worker needed to perform the Work, including employer payments for health and welfare, pension, vacation, apprenticeship and similar purposes. Copies of these prevailing rates are available online at http://www.dir.ca.gov/DLSR.

   7.3 **DIR Registration.** City will not enter into the Contract with a bidder, without proof that the bidder and its Subcontractors are registered with the California Department of Industrial Relations ("DIR") to perform public work under Labor Code Section 1725.5, subject to limited legal exceptions.

8. **Workers' Compensation Certification.** Under Labor Code Section 1861, by signing this Contract, Contractor certifies as follows: "I am aware of the provisions of Labor Code Section 3700 which require every employer to be insured against liability for workers' compensation or to undertake self-insurance in accordance with the provisions of that code, and I will comply

with such provisions before commencing the performance of the Work on this Contract."

**9. Notice.** Any notice, billing, or payment required by the Contract Documents must be made in writing, and sent to the other party by personal delivery, U.S. Mail, a reliable overnight delivery service, facsimile, or by email as a PDF (or comparable) file. Notice is deemed effective upon delivery unless otherwise specified. Notice for each party must be given as follows:

City:

City of Morgan Hill
17575 Peak Avenue
Morgan Hill, CA 95037
Phone: (409) 779-7259
Attn: City Clerk
Email: michelle.bigelow@morganhill.ca.gov
Copy to: yat.cho@morganhill.ca.gov

Contractor:

Name:_____
Address:_____
City/State/Zip:_____
Phone:_____
Attn:_____
Email:_____
Copy to:_____

**10. General Provisions.**

**10.1 Assignment and Successors.** Contractor may not assign its rights or obligations under this Contract, in part or in whole, without City's written consent. This Contract is binding on Contractor's successors and permitted assigns.

**10.2 Third Party Beneficiaries.** There are no intended third party beneficiaries to this Contract except as expressly provided in the General Conditions or Special Conditions.

**10.3 Governing Law and Venue.** This Contract will be governed by California law and venue will be in the Superior Court of Santa Clara County, and no other place.

**10.4 Amendment.** No amendment or modification of this Contract will be binding unless it is in a writing duly authorized and signed by the parties to this Contract.

**10.5 Integration; Severability.** This Contract and the Contract Documents incorporated herein, including authorized amendments or Change Orders thereto, constitute the final, complete, and exclusive terms of the agreement between City and Contractor. If any provision of the Contract Documents, or portion of a provision, is determined to be illegal, invalid, or unenforceable, the remaining provisions of the Contract Documents will remain in full force and effect.

**10.6 Authorization.** Each individual signing below warrants that he or she is authorized to do so by the party that he or she represents, and that this Contract is legally binding on that party. If Contractor is a corporation, signatures from two (2) officers of the corporation are required pursuant to California Corporation Code Section 313.

*[Signatures are on the following page.]*

AS SET FORTH IN CA. CORP. CODE § 313, TWO SIGNATURES ARE REQUIRED FOR CALIFORNIA CORPORATIONS:
(1) CHAIRPERSON OF THE BOARD, PRESIDENT, OR VICE PRESIDENT; AND
2) SECRETARY, ASSISTANT SECRETARY, CHIEF FINANCIAL OFFICER OR ASSISTANT TREASURER.

The parties agree to this Contract as witnessed by the signatures below:

**CITY OF MORGAN HILL:**

_____
Christina J. Turner
City Manager

Date: _____

**Attest:**

_____
Michelle Bigelow
Deputy City Clerk

Date: _____

**Approved as to Form:**

_____
Donald A. Larkin
City Attorney

Date: _____

**CONTRACTOR:**
**[NAME OF CONTRACTOR]**

_____
Signature

_____
Name/Title [print]

Date: _____

*Corporate entities must provide a second signature:*

_____
Signature

_____
Name/Title [print]

Date: _____

_____
Contractor's License Number(s)

_____
Expiration Date(s)

Seal:

_____
Contractor's DIR Registration Number(s)

END OF CONTRACT

# PAYMENT BOND

The City of Morgan Hill ("City") and _____ ("Contractor") have entered into a contract, dated _____, 20___ ("Contract") for work on the Centennial Recreation Center Expansion ("Project"). The Contract is incorporated by reference into this Payment Bond ("Bond").

1. **General.** Under this Bond, Contractor as principal and _____ _____, its surety ("Surety"), are bound to City as obligee in an amount not less than _____ Dollars ($_____) ("Bond Sum"), under California Civil Code Sections 9550, et seq.

2. **Surety's Obligation.** If Contractor or any of its Subcontractors fails to pay any of the persons named in California Civil Code Section 9100 amounts due under the Unemployment Insurance Code with respect to work or labor performed under the Contract, or for any amounts required to be deducted, withheld, and paid over to the Employment Development Department from the wages of employees of Contractor and its Subcontractors, under California Unemployment Insurance Code Section 13020, with respect to the work and labor, then Surety will pay for the same.

3. **Beneficiaries.** This Bond inures to the benefit of any of the persons named in California Civil Code Section 9100, so as to give a right of action to those persons or their assigns in any suit brought upon this Bond. Contractor must promptly provide a copy of this Bond upon request by any person with legal rights under this Bond.

4. **Duration.** If Contractor promptly makes payment of all sums for all labor, materials, and equipment furnished for use in the performance of the Work required by the Contract, in conformance with the time requirements set forth in the Contract and as required by California law, Surety's obligations under this Bond will be null and void. Otherwise, Surety's obligations will remain in full force and effect.

5. **Waivers.** Surety waives any requirement to be notified of alterations to the Contract or extensions of time for performance of the Work under the Contract. Surety waives the provisions of Civil Code Sections 2819 and 2845. City waives requirement of a new bond for any supplemental contract under Civil Code Section 9550. Any notice to Surety may be given in the manner specified in the Contract and delivered or transmitted to Surety as follows:

   Attn: _____
   Address: _____

City/State/Zip: _____
Phone: _____
Fax: _____
Email: _____

6. **Law and Venue.** This Bond will be governed by California law, and any dispute pursuant to this Bond will be venued in the Superior Court of Santa Clara County, and no other place. Surety will be responsible for City's attorneys' fees and costs in any action to enforce the provisions of this Bond.

7. **Effective Date; Execution.** This Bond is entered into and is effective on _____, 20__.

SURETY:

s/ _____

Name: _____

Title: _____

(Attach Acknowledgment with Notary Seal and Power of Attorney)

CONTRACTOR:

s/ _____

Name: _____

Title: _____

**APPROVED AS TO FORM:**

By:_____
Donald A. Larkin, City Attorney

Date:_____

END OF PAYMENT BOND

# PERFORMANCE BOND

The City of Morgan Hill ("City") and
_____ ("Contractor")
have entered into a contract, dated _____, 20____ ("Contract") for work on the Centennial Recreation Center Expansion("Project"). The Contract is incorporated by reference into this Performance Bond ("Bond").

1. **General.** Under this Bond, Contractor as Principal and _____ _____, its surety ("Surety"), are bound to City as obligee for an amount not less than _____ Dollars ($_____) (the "Bond Sum"). By executing this Bond, Contractor and Surety bind themselves and their respective heirs, executors, administrators, successors and assigns, jointly and severally, to the provisions of this Bond.

2. **Surety's Obligations; Waiver.** If Contractor fully performs its obligations under the Contract, including its warranty obligations under the Contract, Surety's obligations under this Bond will become null and void upon recordation of the notice of completion, provided Contractor has timely provided a warranty bond as required under the Contract. Otherwise Surety's obligations will remain in full force and effect until expiration of the one (1) year warranty period under the Contract. Surety waives any requirement to be notified of and further consents to any alterations to the Contract made under the applicable provisions of the Contract Documents, including changes to the scope of Work or extensions of time for performance of Work under the Contract. Surety waives the provisions of Civil Code Sections 2819 and 2845.

3. **Application of Contract Balance.** Upon making a demand on this Bond, City will make the Contract Balance available to Surety for completion of the Work under the Contract. For purposes of this provision, the Contract Balance is defined as the total amount payable by City to Contractor as the Contract Price minus amounts already paid to Contractor, and minus any liquidated damages, credits, or backcharges to which City is entitled under the terms of the Contract.

4. **Contractor Default.** Upon written notification from City that Contractor is in default under Article 13 of the Contract General Conditions, time being of the essence, Surety must act within the time specified in Article 13 to remedy the default through one (1) of the following courses of action:

   **4.1** Arrange for completion of the Work under the Contract by Contractor, with City's consent, but only if Contractor is in default solely due to its financial inability to complete the Work;

**4.2** Arrange for completion of the Work under the Contract by a qualified contractor acceptable to City, and secured by performance and payment bonds issued by an admitted surety as required by the Contract Documents, at Surety's expense, or

**4.3** Waive its right to complete the Work under the Contract and reimburse City the amount of City's costs to have the remaining Work completed.

5. **Surety Default.** If Surety defaults on its obligations under the Bond, City will be entitled to recover all costs it incurs due to Surety's default, including legal, design professional, or delay costs.

6. **Notice.** Any notice to Surety may be given in the manner specified in the Contract and delivered or transmitted to Surety as follows:

Attn: _____
Address: _____
City/State/Zip: _____
Phone: _____
Fax: _____
Email: _____

7. **Law and Venue.** This Bond will be governed by California law, and any dispute pursuant to this Bond will be venued in the Superior Court of Santa Clara County, and no other place. Surety will be responsible for City's attorneys' fees and costs in any action to enforce the provisions of this Bond.

8. **Effective Date; Execution.** This Bond is entered into and effective on _____, 20___.

*[Signatures are on the following page.]*

SURETY:

s/ _____

Name: _____

Title: _____

(Attach Acknowledgment with Notary Seal and Power of Attorney)

CONTRACTOR:

s/ _____

Name: _____

Title: _____

**APPROVED AS TO FORM:**

By:_____
Donald A. Larkin, City Attorney

Date:_____

END OF PERFORMANCE BOND

# WARRANTY BOND

The City of Morgan Hill ("City") and _____ ("Contractor") have entered into a contract, dated _____, 20___ ("Contract") for work on the Centennial Recreation Center Expansion ("Project"). The Contract is incorporated by reference into this Warranty Bond ("Bond").

1. **General.** Under this Bond, Contractor as principal and _____ _____, its surety ("Surety"), are bound to City as obligee in the maximum amount of _____ Dollars ($_____) or 50% of the final Contract Price, whichever is greater ("Bond Sum").

2. **Warranty Period.** The Contract requires Contractor to guarantee its work and that of its Subcontractors on the Project, against defects in materials or workmanship which are discovered during the one (1) year period commencing with recordation of the Notice of Completion (the "Warranty Period").

3. **Surety's Obligations.** If Contractor faithfully carries out and performs its guarantee under the Contract, and, on due notice from City, repairs and make good at its sole expense any and all defects in materials and workmanship in the Project which are discovered during the Warranty Period, or if Contractor promptly reimburses City for all loss and damage that City sustains because of Contractor's failure to makes such repairs in accordance with the Contract requirements, then Surety's obligations under this Bond will be null and void. Otherwise, Surety's obligations will remain in full force and effect.

4. **Waiver.** Surety waives the provisions of Civil Code Sections 2819 and 2845.

5. **Notice.** Any notice to Surety may be given in the manner specified in the Contract and delivered or transmitted to Surety as follows:

   Attn: _____
   Address: _____
   City/State/Zip: _____
   Phone: _____
   Fax: _____
   Email: _____

6. **Law and Venue.** This Bond will be governed by California law, and any dispute pursuant to this Bond will be venued in the Superior Court of Santa Clara County, and no other place. Surety will be responsible for City's

attorneys' fees and costs in any action to enforce the provisions of this Bond.

**7. Effective Date; Execution.** This Bond is entered into and is effective on _____, 20__.

SURETY:

s/ _____

Name: _____

Title: _____

(Attach Acknowledgment with Notary Seal and Power of Attorney)

CONTRACTOR:

s/ _____

Name: _____

Title: _____

**APPROVED AS TO FORM:**

By:_____
Donald A. Larkin, City Attorney

Date:_____

END OF WARRANTY BOND

# GENERAL CONDITIONS

**Table of Contents:**

Article 1 – Definitions ..... 1
Article 2 – Roles and Responsibilities ..... 5
Article 3 – Contract Documents ..... 9
Article 4 – Bonds, Indemnity and Insurance ..... 11
Article 5 – Contract Time ..... 16
Article 6 – Contract Modification ..... 21
Article 7 – General Construction Provisions ..... 24
Article 8 – Payment ..... 32
Article 9 – Labor Provisions ..... 37
Article 10 – Safety Provisions ..... 39
Article 11 – Completion and Warranty Provisions ..... 40
Article 12 – Dispute Resolution ..... 43
Article 13 – Suspension and Termination ..... 48
Article 14 – Miscellaneous Provisions ..... 50

## Article 1
## Definitions

**1.1 Definitions.** The following definitions apply to all of the Contract Documents unless otherwise indicated. Defined terms and titles of documents are capitalized in the Contract Documents, with the exception of the words “day,” “furnish,” “including,” “install,” “work day” or “working day.”

**Allowance** means an amount included in the Bid Proposal for Work that may or may not be included in the Project, depending on conditions that will not become known until after bids are opened. If the Contract Price includes an Allowance and the cost of performing the Work covered by that Allowance is greater or less than the Allowance, the Contract Price will be increased or decreased accordingly.

**Article**, as used in these General Conditions, means a numbered Article of the General Conditions, unless otherwise indicated by the context.

**Change Order** means a written document duly approved and executed by City, which changes the scope of Work, the Contract Price, or the Contract Time.

**City** means the City of Morgan Hill, acting through its City Council, officers, employees, and authorized representatives.

**City Engineer** means the City Engineer for City and his or her authorized delegee(s) designated to oversee and manage the Project on City’s behalf.

**Claim** means a separate demand by Contractor for change in the Contract Time or Contract Price, that has previously been submitted to City in accordance with the requirements of the Contract Documents, and which has been rejected by City, in whole or in part; or a written demand by Contractor objecting to the amount of Final Payment.

**Contract** means the signed agreement between City and Contractor.

**Contract Documents** means, collectively, all of the documents listed as such in Section 2 of the Contract, including the Notice Inviting Bids; the Instructions to Bidders; addenda, if any; the Bid Proposal, and attachments thereto; the Contract; the notice of award and notice to proceed; the payment and performance bonds; the General Conditions; the Special Conditions; the Project Drawings and Specifications; any Change Orders; and any other documents expressly made part of the Contract Documents.

**Contract Price** means the total compensation to be paid to Contractor for performance of the Work, as set forth in the Contract and as amended by Change Order or adjusted for an Allowance. The Contract Price is not subject to adjustment due to inflation or due to the increased cost of labor, material, or equipment following submission of the Bid Proposal. The Contract Price is deemed to include all applicable federal, state, and local taxes

**Contract Time** means the number of calendar days for performance of the Work, as set forth in the Contract and as amended by Change Order.

**Contractor** means the individual, partnership, corporation, or joint-venture who has signed the Contract with City to perform the Work.

**Day** means a calendar day unless otherwise specified.

**Design Professional** means the licensed individual(s) or firm(s) retained by City to provide architectural or engineering services for the Project. If no Design Professional has been retained for this Project, any reference to Design Professional is deemed to refer to the Engineer.

**Drawings** means City-provided plans and graphical depictions of the Project requirements, and does not include Shop Drawings.

**Engineer** means the City Engineer for the City of Morgan Hill and his or her authorized delegee(s).

**Final Completion** means Contractor has fully completed all of the Work required by the Contract Documents, including all punch list items, any required commissioning, and has provided all required submittals, including the warranty bond, instructions and manuals, and as-built drawings to City's satisfaction.

**Final Payment** means payment to Contractor of the unpaid Contract Price, including release of undisputed retention, less amounts withheld pursuant to the Contract Documents, including liquidated damages, up to one hundred twenty five percent (125%) of the amount of any unreleased stop notice, amounts subject to setoff, up to one hundred fifty percent (150%) of any unresolved third-party claim for which Contractor is required to indemnify City, and up to one hundred fifty percent (150%) of any amount in dispute as authorized by Public Contract Code Section 7107.

**Furnish** means to purchase and deliver to the Worksite designated for installation.

**Hazardous Materials** means any substance or material identified now or in the future as hazardous under any federal, state, or local law or regulation, or any other substance or material that may be considered hazardous or otherwise subject to statutory or regulatory requirements governing handling, disposal, or cleanup.

**Including**, whether or not capitalized, means "including, but not limited to," unless the context requires otherwise.

**Inspector** means the individual(s) or firm(s) retained by City to inspect the workmanship, materials, and manner of construction of the Project and its components to ensure compliance with the Contract Documents and all applicable codes, regulations, and permits.

**Install** means to fix in place for materials, and to fix in place and connect for equipment.

**Project** means the public works project referenced in the Contract.

**Project Manager** means the individual designated by City to oversee and manage the Project on City's behalf and may include his or her authorized delegee(s) when the Project Manager is unavailable. If no Project Manager has been designated for this Project, any reference to Project Manager is deemed to refer to the Engineer.

**RFI** means a written request from Contractor for information from City or its Design Professional.

**Section** as used in these General Conditions, means a numbered Section of the General Conditions, unless otherwise indicated by the context.

**Shop Drawings** means drawings, plan details or other graphical depictions prepared by or on behalf of Contractor, and subject to City approval, which are

intended to provide details for fabrication, installation, and the like, of items required by or shown in the Drawings and Specifications.

**Specifications** means the technical, text specifications describing the Project requirements, which are prepared for and incorporated into this Project by or on behalf of City, and does not include the Contract, General Conditions or Special Conditions.

**Subcontractor** means an individual, partnership, corporation, or joint-venture retained by Contractor directly or indirectly through a subcontract to perform a specific portion of the Work. The term Subcontractor applies to subcontractors, suppliers, fabricators, and equipment lessors of all tiers, unless otherwise indicated by the context.

**Technical Specifications** means Specifications.

**Work** means all of the construction and services necessary or incidental to completing the Project in conformance with the requirements of the Contract Documents.

**Work Day or Working Day**, whether or not capitalized, means a weekday which is not a holiday observed by City.

**Worksite** means the place or places where the Work is performed.

## Article 2
## Roles and Responsibilities

### 2.1 Design Professional.

(A) ***General.*** Design Professional, as City's representative, is responsible for the overall design of the Project, and to the extent authorized by City, may act on City's behalf to ensure performance of the Work in compliance with the Contract Documents.

(B) ***Interpretation.*** Design Professional will decide all questions pertaining to interpretation of the Drawings or Specifications. The Design Professional's decision regarding interpretation of the Drawings or Specifications is final and conclusive.

### 2.2 Contractor.

(A) ***General.*** Contractor must provide all labor, materials, equipment and services necessary to perform and timely complete the Work in strict accordance with the Contract Documents, and in an economic and efficient manner in the best interests of City.

(B) ***Responsibility for the Work.*** Contractor is responsible for supervising and directing all aspects of the Work to facilitate the efficient and timely completion of the Work. Contractor is solely responsible for, and required to exercise full control over, construction means, methods, techniques, sequences, procedures, and coordination of all portions of the Work with that of all other Contractors and Subcontractors, except to the extent that the Contract Documents provide other specific instructions.

(C) ***Project Administration.*** Contractor must provide sufficient and competent administration, staff, and skilled workforce necessary to perform and timely complete the Work in accordance with the Contract Documents. Before starting the Work, Contractor must designate in writing and provide complete contact information, including phone numbers and email address, for the officer or employee in Contractor's organization who is to serve as Contractor's primary representative for the Project, and who has authority to act on Contractor's behalf. A Subcontractor may not serve as Contractor's primary representative.

(D) ***On-Site Superintendent.*** Contractor must, at all times during performance of the Work, provide a qualified and competent full-time superintendent, acceptable to City, and assistants, as necessary, who must be physically present at the Project site while any aspect of the Work is being performed. Failure to comply may result in temporary suspension of the Work, at Contractor's sole expense and with no extension of

Contract Time, until the superintendent is physically present to supervise the Work. Contractor must provide written notice to City, as soon as practicable, before replacing the superintendent.

(E) ***Standards; Compliance.*** Contractor must, at all times, ensure that the Work is performed in a good workmanlike manner following best practices and in full compliance with the Contract Documents and all applicable laws, regulations, codes, standards, and permits.

(F) ***Responsible Party.*** Contractor is solely responsible to City for the acts or omissions of any party or parties performing portions of the Work or providing equipment, materials or services for or on behalf of Contractor or its Subcontractors. If any person employed by Contractor fails or refuses to comply with the Engineer's directions regarding the performance of the Work, or is determined by the Engineer to be incompetent to perform the Work, or acts in a disorderly or improper manner at the Worksite, that person may be permanently dismissed from the Project at the request of the Engineer.

(G) ***Correction of Defects.*** Contractor must promptly correct, at Contractor's sole expense, any Work that is determined by City, Project Manager, or the Inspector to be deficient or defective in workmanship, materials, and equipment.

(H) ***Contractor's Records.*** Contractor must maintain all of its records relating to the Project in any form, including paper documents, photos, videos and electronic records. Project records subject to this provision include, but are not limited to, Project cost records and records relating to preparation of Contractor's bid.

(1) Contractor's cost records must include all supporting documentation, including original receipts, invoices, and payroll records, evidencing its direct costs to perform the Work, including, but not limited to, costs for labor, materials and equipment. Each cost record should include, at a minimum, a description of the expenditure with references to the applicable requirements of the Contract Documents, the amount actually paid, the date of payment, and whether the expenditure is part of the original Contract Price, related to an executed Change Order, or otherwise categorized by Contractor as extra work. Contractor's failure to comply with this provision as to any claimed cost operates as a waiver of any rights to recover the claimed cost.

(2) Contractor must continue to maintain its Project records in an organized manner for a period of four (4) years after City's

acceptance of the Project or following termination, whichever occurs first. Subject to prior notice to Contractor, City is entitled to inspect or audit any of Contractor's Project records relating to the Project or to investigate Contractor's plant or equipment during Contractor's normal business hours.

## 2.3 Subcontractors.

(A) ***General.*** All Work which is not performed by Contractor with its own forces must be performed by Subcontractors, subject to the fifty percent (50%) limitation set forth in the Instructions to Bidders. City reserves the right to approve or reject any and all Subcontractors proposed to perform the Work.

(B) ***Contractual Obligations.*** Contractor must require every Subcontractor to be bound to the provisions of the Contract Documents as they apply to the Subcontractor's portion(s) of the Work, and to likewise bind their subcontractors or suppliers. Nothing in these Contract Documents creates a contractual relationship between a Subcontractor and City, but City is deemed to be a third-party beneficiary of the contract between Contractor and each Subcontractor.

Copies of subcontracts must be available to the Engineer upon request. Before a Subcontractor commences Work on the Project, Contractor must provide the Engineer a written statement with the name of the Subcontractor, a description of each portion of the Work performed by the Subcontractor, and the percentage of the overall Work to be performed by the Subcontractor.

(C) ***Termination.*** If the Contract is terminated, each Subcontractor's agreement must be assigned by Contractor to City, subject to the prior rights of any surety, provided that City accepts the assignment by written notification, and assumes all rights and obligations of Contractor pursuant to each such subcontract agreement.

(D) ***Substitution of Subcontractor.*** If Contractor requests substitution of a listed Subcontractor under Public Contract Code Section 4107, Contractor is solely responsible for all costs City incurs in responding to the request, including legal fees and costs to conduct a hearing.

## 2.4 Coordination of Work.

(A) ***Concurrent Work.*** City reserves the right to perform or to have performed other work on or adjacent to the Project site while the Work is being performed. Contractor is responsible for coordinating its Work with other work being performed on or adjacent to the Project site, and must

avoid hindering, delaying, or interfering with the work of other contractors and subcontractors. To the full extent permitted by law, Contractor must hold harmless and indemnify City, Design Professional, and Project Manager against any and all claims arising from or related to Contractor's avoidable, negligent, or willful hindrance of, delay to, or interference with the work of another contractor or subcontractor.

(B) ***Defects.*** Before proceeding with any portion of the Work affected by the construction or operations of others, Contractor must give Project Manager prompt written notification of any defects Contractor discovers which will prevent the proper execution of the Work. Failure to give notice of any such known defects will be deemed acknowledgement by Contractor that the work of others is not defective and will not prevent the proper execution of the Work.

**2.5 Submittals.** Unless otherwise specified, Contractor must submit to Project Manager for review and approval, all schedules, Shop Drawings, samples, product data and similar submittals required by the Contract Documents, or upon request by Project Manager. Unless otherwise specified, all submittals, including requests for information (RFIs) are subject to the provisions of this Section.

(A) ***General.*** Contractor is responsible for ensuring that its submittals are accurate and conform to the Contract Documents.

(B) ***Time and Manner of Submission.*** Contractor must ensure that its submittals are prepared and delivered in a manner consistent with the current approved schedule for the Work and within the applicable time specified elsewhere in the Contract Documents, or if no time is specified, in such time and sequence so as not to delay the performance of the Work or completion of the Project.

(C) ***Required Contents.*** Each submittal must include the Project name and contact number, Contractor's name and address, the name and address of any Subcontractor or supplier involved with the submittal, the date, and references to applicable Specification section(s) and/or drawing and detail number(s).

(D) ***Required Corrections.*** If corrections are required, Contractor must promptly make and submit any required corrections in full conformance with the requirements of this Section.

(E) ***Effect of Review and Approval.*** Review and approval of a submittal by City will not relieve Contractor from complying with the requirements of the Contract Documents. Contractor is responsible for

any errors in any submittal, and review or approval of a submittal by City is not an assumption of risk or liability by City.

(F) ***Enforcement.*** Any Work performed or material used without prior approval of a required submittal will be performed at Contractor's risk, and Contractor may be required to bear the costs incident thereto, including the cost of removing and replacing such Work, repairs to other affected portions of the Work, and the cost of additional time or services required of the Design Professional, Project Manager, or Inspector.

(G) **Excessive RFIs.** RFIs will be considered excessive or unnecessary if the Engineer determines that the explanation or response to the RFI is clearly and unambiguously discernable in the Contract Documents. City's costs to review and respond to excessive or unnecessary RFIs may be deducted from payments otherwise due to Contractor.

## Article 3
## Contract Documents

### 3.1 Interpretation of Contract Documents.

(A) ***Drawings and Specifications.*** The Drawings and Specifications included in the Contract Documents are complementary. If Work is shown on one (1) but not on the other, Contractor must perform the Work as though fully described on both, consistent with the Contract Documents and reasonably inferable from them as being necessary to produce the indicated results. The Drawings and Specifications are deemed to include and require everything necessary and reasonably incidental to completion of the Work, whether or not particularly mentioned or shown. Contractor must perform all work and services and supply all things reasonably related to and inferable from the Contract Documents. In the event of a conflict between the Drawings and Specifications, the Specifications will control.

(B) ***Duty to Notify.*** If Contractor becomes aware of any ambiguity, discrepancy, omission, or error in the Drawings or Specifications, Contractor must immediately notify the Design Professional and request clarification of such, by submitting a written request for information (RFI) in the manner specified by City. The Design Professional's clarifications or interpretations will be final and binding.

(C) ***Figures and Dimensions.*** Figures control over scaled dimensions.

(D) ***Technical or Trade Terms.*** Any terms that have well-known technical or trade meanings will be interpreted in accordance with those

meanings, unless otherwise specifically defined in the Contract Documents.

(E) ***Measurements.*** Contractor must verify all relevant measurements at the Worksite before ordering any material or performing any Work, and will be responsible for the correctness of those measurements.

**3.2 Order of Precedence.** Information included in one (1) Contract Document but not in another will not be considered a conflict or inconsistency. Unless otherwise specified in the Special Conditions, in case of any conflict or inconsistency among the Contract Documents, the following order of precedence will apply, beginning from highest to lowest:

(A) Change Orders;
(B) Addenda;
(C) Contract;
(D) Notice to Proceed;
(E) Notice of Award;
(F) Special Conditions;
(G) General Conditions;
(H) Payment and Performance Bonds;
(I) Specifications;
(J) Drawings;
(K) Contractor's Bid Proposal and attachments;
(L) Notice Inviting Bids;
(M) Instructions to Bidders; and
(N) Any documents prepared by and on behalf of a third party, that were not prepared specifically for this Project, e.g., Caltrans Standard Specifications or Caltrans Special Provisions.

**3.3 Caltrans Standard Specifications.** Any reference to or incorporation of the Standard Specifications of the State of California, Department of Transportation ("Caltrans"), including "Standard Specifications," "Caltrans Specifications," "State Specifications," or "CSS," means the most current edition of Caltrans' Standard Specifications, unless otherwise specified ("Standard Specifications"), including the most current amendments as of the date that Contractor's bid was submitted for this Project. The following provisions apply to use of or reference to the Standard Specifications:

(A) ***Limitations.*** None of the "General Provisions" of the Standard Specifications, i.e., Sections 1 through 9, applies to these Contract Documents with the exception of any specific provisions, if any, which are expressly stated to apply to these Contract Documents.

(B) ***Conflicts or Inconsistencies.*** If there is a conflict or inconsistency between any provision in the Standard Specifications and a provision of

these Contract Documents, as determined by City, the provision in the Contract Documents will govern.

(C) ***Meanings.*** Terms used in the Standard Specifications are to be interpreted as follows:

(1) Any reference to the "Engineer" is deemed to mean the City Engineer.

(2) Any reference to the "Special Provisions" is deemed to mean the Special Conditions.

(3) Any reference to the "Department" or "State" is deemed to mean City.

**3.4 For Reference Only.** Contractor is responsible for the careful review of any document, study, or report appended to the Contract Documents solely for informational purposes and identified as "For Reference Only." Nothing in any document, study, or report so appended and identified is intended to supplement, alter, or void any provision of the Contract Documents. However, Contractor is advised that City or its representatives may be guided by information or recommendations included in such reference documents, particularly when making determinations as to the acceptability of proposed materials, methods, or changes in the Work. Contractor must promptly notify City of any perceived or actual conflict between the Contract Documents and any document provided For Reference Only.

## Article 4
## Bonds, Indemnity, and Insurance

**4.1 Payment and Performance Bonds.** Within ten (10) days following issuance of the notice of award, Contractor is required to provide a payment bond and a performance bond, each in the penal sum of not less than one hundred percent (100%) of the Contract Price, using the bond forms included with the Contract Documents. Each bond must be issued by a surety admitted in California. If an issuing surety cancels the bond or becomes insolvent, within seven (7) days following written notice from City, Contractor must substitute a surety acceptable to City. If Contractor fails to substitute an acceptable surety within the specified time, City may, at its sole discretion, withhold payment from Contractor until the surety is replaced to City's satisfaction, or terminate the Contract for default.

**4.2 Indemnity.** To the fullest extent permitted by law, Contractor must indemnify, defend, and hold harmless City, its agents and consultants, and Design Professional (individually, an "Indemnitee," and collectively the

"Indemnitees") from and against any and all liability, loss, damage, claims, expenses (including, without limitation, attorney fees, expert witness fees, paralegal fees, and fees and costs of litigation or arbitration) (collectively, "Liability") of every nature arising out of or in connection with the acts or omissions of Contractor, its employees, Subcontractors, representatives, or agents, in bidding or performing the Work or its failure to comply with any of its obligations under the Contract, except such Liability caused by the active negligence, sole negligence, or willful misconduct of an Indemnitee. This indemnity requirement applies to any Liability arising from alleged defects in the content or manner of submission of Contractor's bid for the Contract. Contractor's failure or refusal to timely accept a tender of defense pursuant to this provision will be deemed a material breach of this Contract. City will timely notify Contractor upon receipt of any third-party claim relating to the Contract, as required by Public Contract Code Section 9201.

**4.3** **Insurance.** No later than ten (10) days following issuance of the notice of award, Contractor is required to procure and provide proof of the insurance coverage required by this section in the form of certificates and endorsements. The required insurance must cover the activities of Contractor and its Subcontractors relating to or arising from the performance of the Work, and must remain in full force and effect at all times during the period covered by the Contract until the date of recordation of the notice of completion. The coverages may be arranged under a single policy for the full limits required or by a combination of underlying policies with the balance provided by excess or "umbrella" policies, provided each such policy complies with the requirements set forth herein. All required insurance must be issued by a company licensed to do business in the State of California, and each such insurer must have an A.M. Best's financial strength rating of "A" or better and a financial size rating of "VIII" or better. If Contractor fails to provide any of the required coverage in full compliance with the requirements of the Contract Documents, City may, at its sole discretion, purchase such coverage at Contractor's expense and deduct the cost from payments due to Contractor, or terminate the Contract for default. Contractor further understands that City reserves the right to modify the insurance requirements set forth herein, with thirty (30) days' notice provided to Contractor, at any time as deemed necessary to protect the interests of City.

(A) **Policies and Limits.** The following insurance policies and limits are required for this Contract unless otherwise specified in the Special Conditions:

(1) **Commercial General Liability Insurance ("CGL").** Contractor shall maintain CGL and must include coverage for

liability arising from Contractor's or its Subcontractor's acts or omissions in the performance of the Work against claims and liabilities for personal injury, death, or property damage providing protection in the minimum amount of: (i) three million dollars ($3,000,000.00) combined single limit each occurrence and either a general aggregate limit of five million dollars ($5,000,000.00) or a general aggregate limit of three million dollars ($3,000,000.00) as applied on a "per project" or "per location" basis, or (ii) the maximum amount of such insurance available to Contractor under Contractor's combined insurance policies (including any excess or "umbrella" policies), whichever is greater.

a. CGL policy may not exclude explosion, collapse, underground excavation hazard, or removal of lateral support.

b. CGL policy must include contractor's protected coverage, blanket contractual, and completed operations.

(2) **Builder's Risk Insurance***:* The Builder's Risk Insurance policy must be issued on occurrence basis, for all-risk coverage (including Flood and Earthquake) on a one hundred percent (100%) completed value basis on the insurable portion of the Project for the benefit of City.

(3) **Workers' Compensation Insurance and Employer's Liability***:* Contractor shall maintain Workers Compensation coverage, as required by law. The policy must comply with the requirements of the California Workers' Compensation Insurance and Safety Act and provide protection in the minimum amount of: (i) One Million Dollars ($1,000,000.00) for any one accident or occurrence, or (ii) the maximum amount of such insurance available to Contractor under Contractor's combined insurance policies (including any excess or "umbrella" policies), whichever is greater.. If Contractor is self-insured, Contractor must provide its Certificate of Permission to Self-Insure, duly authorized by the Department of Industrial Relations.

(4) **Automobile Liability**: Contractor shall maintain Automobile Liability covering all owned, non-owned and hired automobiles (if Contractor does not own automobiles, then Contractor shall maintain Hired/Non-owned Automobile Liability) against claims and liabilities for personal injury, death, or property damage providing protection in the minimum amount of: (i) One Million

Dollars ($1,000,000.00) combined single limit, or (ii) the maximum amount of such insurance available to Contractor under Contractor's combined insurance policies (including any excess or "umbrella" policies), whichever is greater.

(5) **Pollution (Environmental) Liability**: Because the performance of Contractor's work or service under this Contract involves hazardous materials, contaminated soil disposal, and/or a risk of accidental release of fuel oil, chemicals or other toxic gases or hazardous materials, Contractor shall procure and maintain Pollution Liability covering Contractor's liability for bodily injury, property damage and environmental damage resulting from pollution and related cleanup costs arising out of the work or services to be performed under this Contract. Coverage shall be provided for both work performed on site, as well as during the transport of hazardous materials. Such coverage shall be in the minimum amount of: (i) One Million Dollars ($1,000,000.00) for any one accident or occurrence, or (ii) the maximum amount of such insurance available to Contractor under Contractor's combined insurance policies (including any excess or "umbrella" policies), whichever is greater.

(B) **Required Endorsements.** Contractor must provide proof of the following endorsements, listed for each policy for which endorsements are required, as outlined below:

(1) For all Policies except Builder's Risk and Professional Liability:

a. "Waiver of Subrogation" endorsements providing that the carrier agrees to waive any right of subrogation it may have against the City of Morgan Hill and the City's elected or appointed officials, boards, agencies, officers, agents, employees, and volunteers.

(2) General Liability, Automobile, and Pollution Liability:

a. "Additionally Insured" endorsements naming the City of Morgan Hill, its elected or appointed officials, boards, agencies, officers, agents, employees, and volunteers as additional insureds;

b. "Primary and Non-Contributing" endorsements stating that the policy is primary non-contributing;

(3) General Liability:

a. “Separation of Insureds” endorsements stating that the inclusion of more than one insured will not operate to impair the rights of one insured against another, and the coverages afforded will apply as though separate policies have been issued to each insured.

(C) **Subcontractors.** Contractor must ensure that each Subcontractor is required to maintain the same insurance coverage required under this Section 4.3, with respect to its performance of Work on the Project, including those requirements related to the additional insureds and waiver of subrogation.

(D) **Certificates**. Contractor must furnish City with copies of all policies or certificates as outlined herein, whether new or modified, promptly upon receipt. No policy subject to Contractor’s Contract with City shall be reduced, canceled, allowed to expire, or materially changed except after thirty (30) days' notice by the insurer to City, unless due to non-payment of premiums, in which case ten (10) days written notice must be made to City. Certificates, including renewal certificates, may be mailed electronically to riskmgmt@morganhill.ca.gov or delivered to the Certificate Holder address as follows:

City of Morgan Hill
Attn: Risk Management
17575 Peak Avenue
Morgan Hill, CA 95037

**4.4 Warranty Bond.** As a condition precedent to Final Completion, Contractor must submit a warranty bond, using the form provided by City, to guarantee its Work as specified in Article 11, Completion and Warranty Procedures. The warranty bond must be issued by a surety admitted in California for fifty percent (50%) of the final Contract Price or as otherwise specified in the Contract Documents. If an issuing surety cancels the bond or becomes insolvent, within seven (7) days following written notice from City, Contractor must substitute a surety acceptable to City.

## Article 5
## Contract Time

**5.1 Time is of the Essence.** Time is of the essence in Contractor’s performance and completion of the Work, and Contractor must diligently prosecute the Work and complete it within the Contract Time.

(A) ***General.*** Contractor must commence the Work on the date indicated in the notice to proceed, and must fully complete the Work, in strict compliance with all requirements of the Contract Documents, and within the Contract Time.

(B) ***Rate of Progress.*** Contractor and its Subcontractors must, at all times, provide workers, materials, and equipment sufficient to maintain the rate of progress necessary to ensure full completion of the Work within the Contract Time. If City determines that Contractor is failing to prosecute the Work at a sufficient rate of progress, City may, in its sole discretion, direct Contractor to provide additional workers, materials, or equipment, or to work additional hours or days without additional cost to City, in order to achieve a rate of progress satisfactory to City. If Contractor fails to comply with City's directive in this regard, City may, at Contractor's expense, separately contract for additional workers, materials, or equipment or use City's own forces to achieve the necessary rate of progress. Alternatively, City may terminate the Contract based on Contractor's default.

**5.2 Schedule Requirements.** All schedules must be prepared using standard scheduling software acceptable to City, and must provide schedules in electronic and paper form as requested.

(A) ***As-Planned (Baseline) Schedule.*** Within fifteen (15) calendar days following issuance of the notice of award (or as otherwise specified in the Special Conditions), Contractor must submit to City for review and approval an as-planned (baseline) schedule showing in detail how Contractor plans to perform and fully complete the Work within the Contract Time using critical path methodology. The as-planned schedule must include the work of all trades required for the Work, and must be sufficiently comprehensive and detailed to enable progress to be monitored on a day-by-day basis. For each activity, the as-planned schedule must be dated, provided in the format specified in the Contract Documents or as required by City, and must include, at a minimum, a description of the activity, the start and completion dates, and the duration.

(B) ***Progress Schedules.*** Contractor must submit an updated progress schedule and three (3) week look-ahead schedule, in the format specified by City, for review and approval with each application for a progress payment. The progress schedule must show how the actual progress of the Work to date compared to the as-planned schedule, and must identify any actual or potential impacts to the critical path.

(C) ***Recovery Schedule.*** If City determines that the Work is more than one (1) week behind schedule, within seven (7) days following written notice of such determination, Contractor must submit a recovery schedule,

showing how Contractor intends to perform and complete the Work within the Contract Time, based on actual progress to date.

(D) ***Effect of Approval.*** Contractor and its Subcontractors must perform the Work in accordance with the most current approved schedule unless otherwise directed by City. City approval of a schedule does not operate to extend the time for completion of the Work or any component of the Work, and will not affect City's right to assess liquidated damages for Contractor's unexcused delay in completing the Work within the Contract Time.

(E) ***Posting.*** Contractor must at all times maintain a copy of the most current approved progress or recovery schedule posted prominently in its on-site office.

(F) ***Reservation of Rights.*** City reserves the right to direct the sequence in which the Work must be performed or to make changes in the sequence of the Work in order to facilitate the performance of work by City or others, or to facilitate City's use of its property. The Contract Time or Contract Price may be adjusted to the extent such changes in sequence actually increase or decrease Contractor's time or cost to perform the Work.

(G) ***Authorized Working Days and Times.*** Contractor is limited to working Monday through Friday, excluding City of Morgan Hill-observed holidays, during City's normal business hours, except as expressly provided in the Special Conditions, or as authorized in writing by City. City reserves the right to charge Contractor for additional costs incurred by City due to Work performed on days or during hours not expressly authorized in these Contract Documents, including reimbursement of costs incurred for inspection, testing, and construction management services.

## 5.3 Delay and Extensions of Contract Time.

(A) ***Excusable Delay.*** The Contract Time may be extended if Contractor encounters an unavoidable delay in completing the Work within the Contract Time due to causes completely beyond Contractor's control, and which Contractor could not have avoided or mitigated through planning, foresight, and diligence ("Excusable Delay"). Grounds for Excusable Delay may include fire, earthquake, acts of terror or vandalism, epidemic, unforeseeable adverse government actions, unforeseeable actions of third parties, encountering unforeseeable hazardous materials, unforeseeable site conditions, suspension for convenience under Article 13, or unusually severe weather.

(B) ***Non-Excusable Delay.*** Excusable Delay does not include delay that is concurrent with non-Excusable Delay, and does not include delay caused by:

(1) weather conditions which are normal for the location of the Project, as determined by reliable records, including monthly rainfall averages, for the preceding ten (10) years;

(2) Contractor's failure to order equipment and materials sufficiently in advance of the time needed for timely completion of the Work;

(3) Contractor's failure to provide adequate notification to utility companies for connections or services necessary for the timely performance and completion of the Work;

(4) foreseeable conditions Contractor could have ascertained from reasonably diligent inspection of the Worksite or review of the Contract Documents; or

(5) Contractor's financial inability to perform the Work, including insufficient funds to pay its Subcontractors or suppliers.

(C) ***Request for Extension of Contract Time.*** A request for an extension of time and associated delay costs must be submitted in writing to City within ten (10) calendar days of the date the delay is first encountered, even if the duration of the delay is not yet known at that time, or will be deemed waived. In addition to complying with the requirements of this Article 5, the request must be submitted in compliance with the Change Order request procedures in Article 6, below. Strict compliance with these requirements is necessary to ensure that any delay or delay costs may be mitigated as soon as possible, and to facilitate cost-efficient administration of the Project and timely performance of the Work. Any request for an extension of time or delay costs that does not strictly comply with the requirements of Article 5 and Article 6 will be deemed waived.

(1) *Required Contents.* The request must include a detailed description of the cause(s) of the delay, and must also describe the measures that Contractor has taken to mitigate the delay and/or its effects, including efforts to mitigate the cost impact of the delay, e.g., by workforce management, change in sequencing, etc. If the delay is still ongoing at the time the request is submitted, the request should also include Contractor's plan for continued mitigation of the delay or its effects.

(2) *Delay Days and Costs.* The request must specify the number of days of Excusable Delay claimed, or provide a realistic estimate if the duration of the delay is not yet known. The request must specify the amount of any delay-related costs that are claimed, or provide a realistic estimate if the amount is not yet known. Any estimate of delay duration or cost must be updated in writing and submitted with all required supporting documentation as soon as the actual time and cost is known.

(3) *Supporting Documentation.* The request must also include any and all supporting documentation necessary to evidence the delay and its actual impacts, including schedule and cost impacts, including a time impact analysis using critical path methodology, and demonstrating unavoidable delay to Final Completion. The time impact analysis must be submitted in a form or format acceptable to City.

(4) *Burden of Proof.* Contractor has the burden of proving 1) that the delay was an Excusable Delay, as defined above, 2) that Contractor has made reasonable efforts to mitigate the delay and its schedule and cost impacts, 3) that the delay will unavoidably result in delaying Final Completion, and 4) that any delay costs claimed by Contractor were actually incurred and were reasonable under the circumstances.

(5) *Recoverable Costs.* If Contractor is granted an extension of time for Excusable Delay, recompense for delay costs will be limited to actual, direct, reasonable, and substantiated costs, and will not include home office overhead, or markup for overhead and profit.

(6) *Legal Compliance.* Nothing in this provision is intended to require the waiver, alteration, or limitation of the applicability of Public Contract Code Section 7102.

(7) *No Waiver.* Any grant of an extension of time or delay costs due to an Excusable Delay will not operate as a waiver of City's right to assess liquidated damages for unexcused delay.

(8) *Dispute Resolution.* In the event of a dispute over entitlement to an extension of time or delay costs, Contractor may not stop working pending resolution of the dispute, but must continue to comply with its duty to diligently prosecute the performance and timely completion of the Work. Contractor's sole recourse for an unresolved dispute based on City's rejection of a Change Order

request for an extension of time or delay costs is to comply with the Dispute Resolution provisions set forth in Article 12, below.

**5.4 Liquidated Damages.** It is expressly understood that if Final Completion is not achieved within the Contract Time, City will suffer damages which are difficult to determine and accurately specify. Pursuant to Public Contract Code section 7203, if Contractor fails to achieve Final Completion within the Contract Time, City will charge Contractor in the amount specified in the Contract for each day that Final Completion is delayed beyond the Contract Time, as liquidated damages and not as a penalty.

(A) ***Liquidated Damages.*** Liquidated damages will not be assessed for any Excusable Delay, as set forth above.

(B) ***Milestones.*** Liquidated damages will also be separately assessed for failure to meet milestones specified elsewhere in the Contract Documents.

(C) ***Setoff.*** City is entitled to set off the amount of liquidated damages assessed against any payments otherwise due to Contractor, including setoff against release of retention. If there are insufficient Contract funds remaining to cover the full amount of liquidated damages assessed, City is entitled to recover the balance from Contractor or its performance bond surety.

(D) ***Occupancy or Use.*** Occupancy or use of the Project in whole or in part prior to Final Completion does not constitute City's acceptance of the Project and will not operate as a waiver of City's right to assess liquidated damages for Contractor's unexcused delay in achieving Final Completion.

## Article 6
## Contract Modification

**6.1 Changes in Work.** City reserves the right to make changes in the Work without invalidating the Contract. City may direct or Contractor may request changes in the Work, and any such changes will be formalized in a Change Order, which may include commensurate changes in the Contract Price or Contract Time as applicable. Contractor must promptly comply with City-directed changes in the Work in accordance with the intent of the original Contract Documents, even if Contractor and City have not yet reached agreement as to adjustments to the Contract Price or Contract Time.

(A) ***City-Directed Change.*** In the event of a dispute over entitlement to or the amount of a change in Contract Time or a change in Contract Price related to an City-directed change, Contractor must perform the Work as directed and may not delay its work or cease work pending resolution of the dispute, but must continue to comply with its duty to diligently prosecute the performance and timely completion of the Work, including the Work in dispute.

(B) ***Contractor's Obligations.*** In the event that City and Contractor dispute whether a portion or portions of the Work are already required by the Contract Documents as opposed to changed or extra Work, Contractor must perform the Work as directed and may not delay its Work or cease Work pending resolution of the dispute, but must continue to comply with its duty to diligently prosecute the performance and timely completion of the Work, including the Work in dispute.

(C) ***Remedy for Non-Compliance.*** Contractor's failure to promptly comply with an City-directed change is deemed a material breach of the Contract, and in addition to all other remedies available to it, City may, at its sole discretion, hire another contractor or use its own forces to complete the disputed Work at Contractor's sole expense, and may deduct the cost from the Contract Price.

(D) ***Dispute Resolution.*** Contractor's sole recourse for an unresolved dispute related to changes in the Work is to comply with the dispute resolution provisions set forth in Article 12, below.

**6.2 Contractor Change Order Requests.** Contractor must submit a request or proposal for a change in the Work or a change in the Contract Price or Contract Time as a written Change Order request or proposal.

(A) ***Time for Submission.*** Any request for a change in the Contract Price must be submitted in writing to Project Manager within ten (10) calendar days of the date that Contractor first encounters the circumstances, information or conditions giving rise to the Change Order request, even if the total amount of the requested change in the Contract Price or impact on the Contract Time is not yet known at that time.

(B) ***Required Contents.*** Any Change Order request or proposal submitted by Contractor must include a complete breakdown of actual or estimated costs and credits, and must itemize labor, materials, equipment, taxes, insurance, and subcontract amounts. Any estimated cost must be updated in writing as soon as the actual amount is known.

(C) ***Required Documentation.*** All claimed costs must be fully documented, and any related request for an extension of time or delay-

related costs must be included at that time and in compliance with the requirements of Article 5 of the General Conditions.

(D) ***Required Form.*** Contractor must use City's form(s) for submitting all Change Order requests or proposals, unless otherwise specified by City.

(E) ***Certification.*** All Change Order requests must be signed by Contractor and must include the following certification:

> "The undersigned Contractor certifies under penalty of perjury that its statements and representations in this Change Order request are true and correct. Contractor warrants that this Change Order request is comprehensive and complete, and agrees that any costs, expenses, or time extension request not included herein is deemed waived. Contractor understands that submission of claims which have no basis in fact or which Contractor knows to be false may violate the False Claims Act, as set forth in Government Code Sections 12650 et seq."

**6.3 Adjustments to Contract Price.** The amount of any increase or decrease to the Contract Price will be determined based on one (1) of the following methods in the order provided:

(A) ***Unit Pricing.*** Amounts previously provided by Contractor in the form of unit prices, either in a bid schedule or schedule of values, will apply if unit pricing has previously been provided in Contractor's accepted bid schedule or schedule of values for the affected Work;

(B) ***Lump Sum.*** A mutually agreed upon lump sum;

(C) ***Time and Materials.*** On a time and materials basis, which may include a not-to-exceed limit, calculated as the total of the following sums:

(1) All direct labor costs plus fifteen percent (15%) for overhead and profit;

(2) All direct material costs, including sales tax, plus fifteen percent (15%) for overhead and profit;

(3) All direct plant and equipment rental costs, plus fifteen percent (15%) for overhead and profit;

(4) All direct subcontract costs plus ten percent (10%) for overhead and profit; and

(5) Increased bond or insurance premium costs computed at one and one half percent (1½%) of total of the previous four (4) sums.

**6.4 Unilateral Change Order.** If City disagrees with the amount of compensation or extension of time that Contractor has requested, City may elect to issue a unilateral Change Order, directing performance of the Work, and authorizing a change in the Contract Price or Contract Time in the amount City believes is merited. Contractor's sole recourse to dispute the terms of a unilateral Change Order is to submit a timely Claim pursuant to Article 12, below.

**6.5 Non-Compliance Deemed Waiver.** Contractor waives its entitlement to any increase in the Contract Price or Contract Time if Contractor fails to full comply with the provisions of this Article. Contractor will not be paid for unauthorized extra work.

## Article 7
## General Construction Provisions

### 7.1 Permits and Taxes.

(A) ***General.*** Contractor must obtain and pay for any and all permits, fees, or licenses required to perform the Work, unless otherwise indicated in the Contract Documents. Contractor must cooperate with and provide notifications to government agencies with jurisdiction over the Project, as may be required. Contractor must provide City with copies of all notices, permits, licenses, and renewals required for the Work.

**** The contractor will be responsible for securing the necessary building permit and encroachment permit for this project (no cost to the contractor). ****

(B) ***Federal Excise Tax.*** Contractor must pay for all taxes on labor, material and equipment, except Federal Excise Tax to the extent that City is exempt from Federal Excise Tax.

**7.2 Temporary Facilities.** Contractor must provide, at Contractor's sole expense, any and all temporary facilities, including onsite office, sanitary facilities, storage, scaffolds, barricades, walkways, and any other temporary structure required to safely perform the Work along with any utility services incidental thereto.

(A) ***Standards.*** Such structures must be safe and adequate for the intended use, and installed and maintained in accordance with all applicable federal, state, and local laws, codes, and regulations.

(B) ***Removal and Repair.*** Contractor must promptly remove all such temporary facilities when they are no longer needed or upon completion of the Work, whichever comes first. Contractor must promptly repair any damage to City's property caused by the installation, use, or removal of the temporary facilities, and must promptly restore the property to its original or intended condition.

(C) ***Additional Requirements.*** Additional provisions pertaining to temporary facilities may be included in the Specifications or Special Conditions.

**7.3 Signs.** No signs may be displayed on or about City's property, except signage which is required by law or by the Contract Documents, without City's prior written approval as to content, size, design, and location.

**7.4 Protection of Work and Property.**

(A) ***General.*** Contractor is responsible at all times for protecting the Work and materials and equipment to be incorporated into the Work from damage until the Notice of Completion has been recorded. Except as specifically authorized by City, Contractor must confine its operations to the area of the Project site indicated in the Drawings. Contractor is liable for any damage caused to City's real or personal property, the real or personal property of adjacent property owners, or the work or personal property of other contractors working for City.

(B) ***Unforeseen Conditions.*** If Contractor encounters facilities, utilities, or other unknown conditions not shown on or reasonably inferable from the Drawings or apparent from inspection of the Project site, Contractor must promptly notify Project Manager, and must avoid taking any action which could cause damage to the facilities or utilities pending further direction from Project Manager. If Project Manager's subsequent direction to Contractor affects Contractor's cost or time to perform the Work, Contractor may submit a Change Order request as set forth in Article 6, above.

(C) ***Support; Adjacent Properties.*** Contractor must provide, install, and maintain all shoring, bracing, underpinning, etc., necessary to provide support to City's property and adjacent properties and improvements thereon. Contractor must provide notifications to adjacent property owners as may be required by law.

**7.5 Noninterference.** Contractor must take reasonable measures to avoid interfering with City's use of its property at or adjacent to the Project site,

including use of roadways, entrances, parking areas, walkways, and structures.

## 7.6 Materials and Equipment.

(A) ***General.*** Unless otherwise specified, all materials and equipment required for the Work must be new and of the best grade for the intended purpose, and furnished in sufficient quantities to ensure the proper and expeditious performance of the Work. Unless otherwise specified, all materials and equipment required for the Work are deemed to include all components required for complete installation and intended operation, and must be installed in accordance with the manufacturer's recommendation. Contractor is responsible for all shipping, handling, and storage costs associated with the materials and equipment required for the Work, and is responsible for protecting the Work and all of the required materials, supplies, tools and equipment at Contractor's sole cost until City accepts the Project.

(B) ***City-Provided.*** If the Work includes installation of materials or equipment to be provided by City, Contractor is solely responsible for the proper examination, handling, storage, and installation of such items in accordance with the Contract Documents. Contractor must promptly notify City of any defects discovered in City-provided materials or equipment. Contractor is solely responsible for any loss of or damage to such items which occurs while the items are in Contractor's custody and control, the cost of which may be offset from the Contract Price and deducted from any payment(s) due to Contractor.

(C) ***Intellectual Property Rights.*** Contractor must, at its sole expense, obtain any authorization required for use of patented or copyright protected materials, equipment, devices or processes that are incorporated into the Work. Contractor's indemnity obligation in Article 4, applies to any claimed violation of intellectual property rights in violation of this provision.

## 7.7 Substitutions.

(A) ***"Or Equal."*** Any specification designating a material, product, thing, or service by specific brand or trade name, followed by the words "or equal," is intended only to indicate quality and type of item desired, and Contractor may request use of any equal material, product, thing, or service.

(B) ***Request for Substitution.*** A request for substitution must be submitted to Project Manager for approval within the applicable time period provided in the Contract Documents. If no time period is specified,

the substitution request may be submitted any time within thirty five (35) days after the date of award of the Contract, or sufficiently in advance of the time needed to avoid delay of the Work, whichever is earlier.

(C) ***Substantiation.*** All data substantiating the proposed substitute as an "equal" item must be submitted with the written request for substitution. Contractor's failure to timely provide necessary substantiation is ground for rejection of the proposed substitution, without further review.

(D) ***Burden of Proving Equality.*** Contractor has the burden of proving the equality of the proposed substitution. City has sole discretion to determine whether a proposed substitution is "equal," and City's determination is final.

(E) ***Approval or Rejection.*** If the proposed substitution is approved, Contractor is solely responsible for any additional costs associated with the substituted item(s). If the proposed substitution is rejected, Contractor must, without delay, install the item specified.

(F) ***Contractor's Obligations.*** City's review of a proposed substitution will not relieve Contractor from any of its obligations under the Contract Documents. In the event Contractor makes an unauthorized substitution, Contractor will be solely responsible for all resulting cost impacts, including the cost of removal and replacement and the impact to other design elements.

## 7.8 Testing and Inspection.

(A) ***General.*** All materials, equipment, and workmanship used in the Work are subject to inspection by Inspector at all times and locations during construction and/or fabrication. All manufacturers' application or installation instructions must be provided to the Inspector at least ten (10) days prior to the first such application or installation. Contractor must, at all times, make the Work available for inspection.

*(B)* ***Scheduling and Notification.*** Contractor must schedule all tests required by the Contract Documents in time to avoid any delay to the progress of the Work. Contractor must provide timely notice to all necessary parties as specified in the Contract Documents.

(C) ***Responsibility for Costs.*** City will bear the initial cost of testing to be performed by independent testing consultants retained by City, subject to the following exceptions:

(1) Contractor will be responsible for the costs of any subsequent tests which are required to substantiate compliance with the Contract Documents, and any associated remediation costs.

(2) Contractor will be responsible for inspection costs, at City's established rates, for inspection time lost because the Work is not ready or Contractor fails to appear for a scheduled inspection.

(3) In addition, if any portion of the Work which is subject to testing is covered or concealed by Contractor prior to testing, Contractor will bear the cost of making that portion of the Work available for the testing required by the Contract Documents, and any associated repair or remediation costs.

(D) ***Contractor's Obligations.*** Any Work that fails to comply with the requirements of the Contract Documents must be promptly repaired, replaced, or corrected by Contractor, at Contractor's sole expense, even if that Work was previously inspected or included in a progress payment. Contractor is solely responsible for any delay occasioned by remediation of noncompliant Work. Inspection of the Work does not in any way relieve Contractor of its obligations to perform the Work as specified.

(E) ***Distant Locations.*** If required off-site testing or inspection must be conducted at a location more than 100 miles from the Project site, Contractor is solely responsible for the additional travel costs required for testing and/or inspection at such locations.

(F) ***Final Inspection.*** The provisions of this Section 7.8 apply to final inspection under Article 11, Completion and Warranty Provisions.

**7.9 Clean up.** Contractor must regularly remove debris and waste materials and maintain the Worksite in clean and neat condition.

(A) ***General.*** Prior to discontinuing work in an area, Contractor must clean the area and remove all rubbish along with its construction equipment, tools, machinery, waste and surplus materials. Contractor must, at all times, minimize and confine dust and debris resulting from construction activities.

(B) ***Completion.*** At the completion of the Work, Contractor must remove from the Worksite all of its equipment, tools, surplus materials, waste materials and debris. Before demobilizing from the Worksite, Contractor must ensure that all surfaces are cleaned, sealed, waxed, or finished as applicable, and that all marks, stains, paint splatters, and the like have been properly removed from the completed Work and the surrounding areas.

(C) ***Non-Compliance.*** If Contractor fails to commence compliance with its cleanup obligations within two (2) business days following written notification from City or its representative, City may undertake appropriate cleanup measures without further notice and the cost will be deducted from any amounts due or to become due Contractor.

**7.10 Instructions and Manuals.** Contractor must provide three (3) copies each of all instructions and manuals required by the Contract Documents, unless otherwise specified. These must be complete as to drawings, details, parts lists, performance data, and other information that may be required for City to easily maintain and service the materials and equipment installed for this Project.

(A) ***Submittal Requirements.*** All manufacturers' application or installation instructions must be provided to the Inspector at least ten (10) days prior to the first such application. The instructions and manuals, along with any required guarantees, must be delivered to City for review.

(B) ***Instruction of Personnel.*** Contractor or its Subcontractors must instruct City's personnel in the operation and maintenance of any complex equipment as a condition precedent to Final Completion, if required in the Contract Documents.

**7.11 As-built Drawings.** Contractor and its Subcontractors must maintain on the Worksite a separate complete set of the Drawings which will be used solely for the purpose of recording changes made in any portion of the Work in order to create accurate record drawings at the end of the Project.

(A) ***Duty to Update.*** The as-built drawings must be updated as changes occur, on a daily basis if necessary. Progress payments may be delayed, in whole or in part, until the as-built drawings are brought up to date to the satisfaction of City. Actual locations to scale must be identified on the as-built drawings for all runs of mechanical and electrical work, including all site utilities, etc., installed underground, in walls, floors, or otherwise concealed. Deviations from the original Drawings must be shown in detail. The location of all main runs, whether piping, conduit, ductwork, drain lines, etc., must be shown by dimension and elevation.

(B) ***Final Completion.*** Contractor must verify that all changes in the Work are depicted in the as-built drawings and must deliver the complete set of as-built drawings to City for review and approval as a condition precedent to Final Completion.

**7.12 Existing Utilities.** As required by Government Code Section 4215, if, during the performance of the Work, Contractor discovers utility facilities

not identified by City in the Contract Documents, Contractor must immediately provide written notice to City and the utility. City assumes responsibility for the timely removal, relocation, or protection of existing main or trunkline utility facilities located on the Project site, if those utilities are not identified in the Contract Documents. Contractor will be compensated in accordance with the provisions of the Contract Documents for the costs of locating, repairing damage not due to Contractor's failure to exercise reasonable care, and removing or relocating such utility facilities not indicated in the Drawings or Specifications with reasonable accuracy, and for equipment on the Project necessarily idled during such work. Contractor will not be assessed liquidated damages for delay in completion of the Work, to the extent such delay was caused by City's failure to provide for removal or relocation of the utility facilities.

**7.13 Notice of Excavation.** Government Code Section 4216.2, requires that except in an emergency, Contractor must contact the appropriate regional notification center, or Underground Services Alert at 800-642-2444 (for Northern California), at least two (2) working days, but not more than fourteen (14) calendar days before starting any excavation if the excavation will be conducted in an area that is known, or reasonably should be known, to contain subsurface installations, and if practical, Contractor must delineate with white paint or other suitable markings the area to be excavated.

**7.14 Trenching and Excavations.**

(A) ***Duty to Notify.*** Contractor must promptly, and before the following conditions are disturbed, provide written notice to City if Contractor finds any of the following conditions:

(1) Material that Contractor believes may be a hazardous waste, as defined in Section 25117 of the Health and Safety Code, that is required to be removed to a Class I, Class II, or Class III disposal site in accordance with the provisions of existing law;

(2) Subsurface or latent physical conditions at the Worksite differing from those indicated by information about the Worksite made available to bidders prior to the deadline for submitting bids; or

(3) Unknown physical conditions at the Worksite of any unusual nature, materially different from those ordinarily encountered and generally recognized as inherent in work of the character required by the Contract Documents.

(B) ***City Investigation.*** City will promptly investigate the conditions and if City finds that the conditions do materially differ or do involve hazardous waste, and cause a decrease or increase in Contractor's cost of, or the time required for, performance of any part of the Work, City will issue a Change Order.

(C) ***Disputes.*** In the event that a dispute arises between City and Contractor regarding any of the conditions specified in subsection (A) above, Contractor will not be excused from any scheduled completion date provided for in the Contract Documents, but must proceed with all Work to be performed under the Contract. Contractor will retain any and all rights provided either by the Contract or by law which pertain to the resolution of disputes between Contractor and City.

**7.15 Trenching of Five Feet or More.** As required by Labor Code Section 6705, if the Contract Price exceeds Twenty Five Thousand Dollars ($25,000.00) and the Work includes the excavation of any trench or trenches of five (5) feet or more in depth, a detailed plan must be submitted to City or its civil or structural engineer, for acceptance in advance of the excavation. The detailed plan must show the design of shoring, bracing, sloping, or other provisions to be made for worker protection from the hazard of caving ground during the excavation. If the plan varies from the shoring system standards, it must be prepared by a registered civil or structural engineer. Use of a shoring, sloping, or protective system less effective than that required by the Construction Safety Orders is prohibited.

**7.16 New Utility Connections.** City will pay connection charges and meter costs for new permanent utilities required by the Contract Documents, if any. Contractor must notify City sufficiently in advance of the time needed to request service from each utility provider so that connections and services are initiated in accordance with the Project schedule.

**7.17 Lines and Grades.** Contractor is required to use any benchmark provided by the Engineer. Unless otherwise specified in the Contract Documents, Contractor must provide all lines and grades required to execute the Work.

**7.18 Historic or Archeological Items**.

(A) ***Contractor's Obligations.*** Contractor must ensure that all persons performing Work at the Project site are required to immediately notify Project Manager, upon discovery of any potential historic or archeological items, including historic or prehistoric ruins, burial grounds, archaeological or vertebrate paleontological site, including fossilized

footprints or other archeological, paleontological or historical feature on the Project site (collectively, “Historic or Archeological Items”).

(B) ***Discovery; Cessation of Work.*** Upon discovery of any potential Historic or Archeological Items, Work must be stopped within an eighty five (85) foot radius of the find and may not resume until authorized in writing by City. If required by City, Contractor must assist in protecting or recovering the Historic or Archeological Items, any such assistance to be compensated as extra work on a time and materials basis under Article 6, Contract Modification. Any suspension of Work required due to discovery of Historic or Archeological Items will be treated as a suspension for convenience under Article 13.

**7.19 Environmental Control.** Contractor must not pollute any drainage course or its tributary inlets with fuels, oils, bitumens, acids, insecticides, herbicides or other harmful materials. Contractor and its Subcontractors must at all times in the performance of the Work comply with all applicable federal, state, and local laws and regulations concerning pollution of waterways.

(A) ***Stormwater Permit.*** Contractor must comply with all applicable conditions of the State Water Resources Control Board national Pollutant Discharge Elimination System General Permit for Waste Discharge Requirements for Discharges of Stormwater Runoff Associated with Construction Activity (“Stormwater Permit”).

(B) ***Contractor’s Obligations.*** If required for the Work, a copy of the Stormwater Permit is on file in City’s principal administrative offices, and Contractor must comply with the same without adjustment of the Contract Price or the Contract Time. Contractor must timely and completely submit required reports and monitoring information required by the conditions of the Stormwater Permit, Contractor must comply with all other applicable state, municipal or regional laws, ordinances, rules or regulations governing discharge of stormwater, including applicable municipal stormwater management programs.

## Article 8
## Payment

**8.1 Schedule of Values.** Prior to submitting its first application for payment, Contractor must prepare and submit to Project Manager a schedule of values apportioned to the various divisions and phases of the Work. Each line item contained in the schedule of values must be assigned a value such that the total of all items equals the Contract Price. The items must be sufficiently detailed to enable accurate evaluation of the percentage of completion claimed in each application for payment, and the assigned

value consistent with any itemized or unit pricing submitted with Contractor's bid.

**8.2 Progress Payments.** Following the last day of each month, or as otherwise required by the Special Conditions or Specifications, Contractor will submit to Project Manager a monthly application for payment for Work performed during the preceding month based on the estimated value of the Work performed during that preceding month.

(A) ***Application for Payment.*** Each application for payment must be itemized to include labor, materials, and equipment incorporated into the Work, and materials and equipment delivered to the Worksite, as well as authorized and approved Change Orders. Each pay application must be supported by Contractor's schedule of values and any other substantiating data required by the Contract Documents.
**Each application for payment shall be accompanied by completed "Contract Balance Form," a copy of which is provided at the end of Article 8.**

(B) ***Payment of Undisputed Amounts.*** City will pay the undisputed amount due, as certified the Design Professional, within thirty (30) days after Contractor has submitted a complete and accurate payment application, subject to Public Contract Code Section 20104.50. City will deduct a percentage from each progress payment as retention, as set forth in Section 8.5, below, and may deduct additional amounts as set forth in Section 8.3, below.

**8.3 Adjustment of Payment Application.** City may adjust or reject a payment application, including application for Final Payment, in whole or in part, based upon any of the circumstances listed below. Contractor will be notified in writing of the basis for the adjustment, and will be promptly paid once the basis for that adjustment has been remedied and no longer exists.

(A) Contractor's unexcused failure to perform the Work as required by the Contract Documents, including correction or completion of punch list items;

(B) Loss or damage caused by Contractor or its Subcontractor(s) arising out of or relating to performance of the Work;

(C) Contractor's failure to pay its Subcontractors and suppliers when payment is due;

(D) Failure to timely correct rejected, nonconforming, or defective Work;

(E) Unexcused delay in performance of the Work;

(F) Any unreleased stop notice, retained as one hundred twenty five percent (125%) of the amount claimed;

(G) Failure to submit any required schedule or schedule update in the manner and within the time specified in the Contract Documents:

(H) Failure to maintain or submit as-built documents in the manner and within the time specified in the Contract Documents;

(I) Work performed without approved Shop Drawings, when approved Shop Drawings are required before proceeding with the Work;

(J) Contractor's payroll records are delinquent or inadequate; and

(K) Any other costs or charges that may be offset against payments due, as provided in the Contract Documents, including liquidated damages.

**8.4 Acceptance of Work.** Neither City's payment of progress payments nor its partial or full use or occupancy of the Project constitutes acceptance of any part of the Work.

**8.5 Retention.** City will retain five percent (5%) of the amount due on each progress payment, or the percentage stated in the Notice Inviting Bids, whichever is greater, as retention to ensure full and satisfactory performance of the Work.

(A) ***Substitution of Securities.*** As provided by Public Contract Code Section 22300, Contractor may request in writing that it be allowed, at its sole expense, to substitute securities for the retention withheld by City. Any escrow agreement entered into pursuant to this provision must fully comply with Public Contract Code Section 22300, and will be subject to approval as to form by City's legal counsel.

(B) ***Release of Undisputed Retention.*** All undisputed retention, less any amounts that may be assessed as liquidated damages, retained for stop notices, or otherwise withheld under Section 8.3 or 8.6 will be released as Final Payment to Contractor no sooner than thirty five (35) days following recordation of the notice of completion, and no later than sixty (60) days following acceptance of the Project by City's governing body or authorized designee, or, if the Project has not been accepted, no later than sixty (60) days after the Project is otherwise considered complete under Public Contract Code Section 7107(c).

**8.6 Setoff.** City is entitled to set off any amounts due from Contractor against any payments due to Contractor. City's entitlement to setoff includes progress payments as well as Final Payment and release of retention.

**8.7 Payment to Subcontractors and Suppliers.** Each month, Contractor must promptly pay each Subcontractor and supplier the value of the portion of labor, materials, and equipment incorporated into the Work or delivered to the Worksite by the Subcontractor or supplier during the preceding month. Such payments must be made in accordance with the requirements of the law, and those of the Contract Documents and applicable subcontract or supplier contract.

(A) ***Withholding for Stop Notice.*** City will withhold one hundred twenty five percent (125%) of the amount claimed by an unreleased stop notice, a portion of which may be retained by City for the costs incurred in handling the stop notice claim, including attorneys' fees and costs, as authorized by law.

(B) ***Joint Checks.*** City reserves the right to issue joint checks made payable to Contractor and its Subcontractors or suppliers. As a condition to release of payment by a joint check, the joint check payees may be required to execute a joint check agreement in a form provided or approved by City. The joint check payees will be jointly and severally responsible for the allocation and disbursement of funds paid by joint check. Payment by joint check will not be construed to create a contractual relationship between City and a Subcontractor or supplier of any tier beyond the scope of the joint check agreement.

**8.8 Final Payment.** Final Completion, acceptance of the Work by City, and recordation of the Notice of Completion, and any release required by the Contract Documents are conditions precedent to Final Payment and release of undisputed retention, as set forth above. Contractor's application for Final Payment must comply with the requirements for submitting an application for a progress payment as stated in Section 8.2, above. Corrections to previous progress payments, including adjustments to estimated quantities for unit priced items, may be included in the Final Payment. The date of Final Payment is deemed to be effective on the date that City acts to release retention as final payment to Contractor, or otherwise provides written notice to Contractor of Final Payment. If the amount due from Contractor to City exceeds the amount of Final Payment, City retains the right to recover the balance from Contractor or its sureties.

**8.9 Release of Claims.** City may, at any time, require that payment of the undisputed portion of any progress payment or Final Payment be contingent upon Contractor furnishing City with a written release of all

claims against City arising from or related to the portion of Work covered by those undisputed amounts. Any disputed amounts may be specifically excluded from the release.

**8.10 Warranty of Title.** Contractor warrants that title to all work, materials, or equipment incorporated into the Work and included in a request for payment will pass over to City free of any claims, liens, or encumbrances upon payment to Contractor.

## CONTRACT BALANCE FORM

## CENTENNIAL RECREATION CENTER EXPANSION

*Note: A detailed invoice MUST be attached to this Contract Balance Form.*

---

CONTRACTOR NAME: _____ DATE: _____

MAILING ADDRESS: _____ TELEPHONE NO.: _____

_____ FAX NO.: _____

_____ PROJECT NO.: _____

INVOICE NO.: _____

---

1. ORIGINAL CONTRACT AMOUNT: $_____

2. APPROVED CHANGE ORDERS TOTAL: $_____

3. REVISED CONTRACT AMOUNT: (1+2) $_____

4. PREVIOUS BALANCE PAID: $_____

5. REMAINING BALANCE: (3-4) $_____

6. CURRENT PROGRESS PAYMENT DUE: $_____
   *(before retention)*

7. 5% RETENTION FROM WORK DONE: (-)$_____

8. CURRENT BALANCE DUE: (6-7) $_____

9. REMAINING BALANCE OF REVISED CONTRACT AMOUNT: (5-8) $_____
   *(including retention)*

## Article 9
## Labor Provisions

**9.1 Discrimination Prohibited**. Discrimination against any prospective or present employee engaged in the Work on grounds of race, color, ancestry, national origin, ethnicity, religion, sex, sexual orientation, age, disability, or marital status is strictly prohibited. Contractor and its Subcontractors are required to comply with all applicable Federal and California laws including the California Fair Employment and Housing Act (Government Code Sections 12900 et seq.), Government Code Section 11135, and Labor Code Sections 1735, 1777.5, 1777.6, and 3077.5.

**9.2 Labor Code Requirements.**

(A) ***Eight Hour Day.*** Under Labor Code Section 1810, eight (8) hours of labor constitute a legal day's work under this Contract.

(B) ***Penalty.*** Under Labor Code Section 1813, Contractor will forfeit to City as a penalty, the sum of $25.00 for each day during which a worker employed by Contractor or any Subcontractor is required or permitted to work more than eight (8) hours in any one (1) calendar day or more than forty (40) hours per calendar week, except if such workers are paid overtime under Labor Code Section 1815.

(C) ***Apprentices.*** Contractor is responsible for compliance with the requirements governing employment and payment of apprentices, as set forth in Labor Code Section 1777.5, which is fully incorporated by reference.

(D) ***Notices.*** Under Labor Code Section 1771.4, Contractor is required to post all job site notices prescribed by law or regulation.

**9.3 Prevailing Wages.** Each worker performing Work under this Contract that is covered under Labor Code Section 1720, including cleanup at the Project site, must be paid at a rate not less than the prevailing wage as defined in Sections 1771 and 1774 of the Labor Code. The prevailing wage rates are available online at http://www.dir.ca.gov/dlsr. Contractor must post a copy of the applicable prevailing rates at the Worksite.

(A) ***Penalties.*** Under Labor Code Section 1775, Contractor and any Subcontractor will forfeit to City as a penalty up to Two Hundred Dollars ($200.00) for each calendar day, or portion a day, for each worker paid less than the applicable prevailing wage rate. Contractor must also pay each worker the difference between the applicable prevailing wage rate and the amount actually paid to that worker.

(B) ***Federal Requirements.*** If this Project is subject to Federal prevailing wage requirements in addition to California prevailing wage requirements, Contractor and its Subcontractors are required to pay the higher of the current applicable prevailing wage rates under federal law, available online at http://www.access.gpo.gov/davisbacon/ca.html.

**9.4 Payroll Records.** Contractor must comply with the provisions of Labor Code Sections 1776 and 1812 and all implementing regulations, which are fully incorporated by this reference, including requirements for electronic submission of payroll records.

(A) ***Contractor and Subcontractor Obligations***. Contractor and each Subcontractor must keep accurate payroll records, showing the name, address, social security number, work classification, straight time and overtime hours worked each day and week, and the actual per diem wages paid to each journeyman, apprentice, worker, or other employee employed in connection with the Work. Each payroll record must contain or be verified by a written declaration that it is made under penalty of perjury, stating both of the following:

(1) The information contained in the payroll record is true and correct.

(2) Contractor or Subcontractor has complied with the requirements of Labor Code Sections 1771, 1811, and 1815 for any Work performed by its employees on the Project.

(B) ***Certified Record.*** A certified copy of an employee's payroll record must be made available for inspection or furnished to the employee or his or her authorized representative on request, to City, or to the Division of Labor Standards Enforcement, and the Division of Apprenticeship Standards of the Department of Industrial Relations, and as further provided by the Labor Code.

(C) ***Enforcement.*** Upon notice of noncompliance with Labor Code Section 1776, Contractor or Subcontractor has ten (10) days in which to comply with requirements of this section. If Contractor or Subcontractor fails to do so within the ten (10) day period, Contractor or Subcontractor will forfeit a penalty of One Hundred Dollars ($100.00) per day, or portion a day, for each worker for whom compliance is required, until strict compliance is achieved. Upon request by the Division of Apprenticeship Standards, or the Division of Labor Standards Enforcement, these penalties will be withheld from progress payments then due.

**9.5 Labor Compliance.** Under Labor Code section 1771.4, the Contract for this Project is subject to compliance monitoring and enforcement by the California Department of Industrial Relations.

**9.6 Wage Theft Prevention.** Compliance with Wage and Hour Laws: Contractor, and any subcontractor it employs to complete work under this Agreement, shall comply with all applicable federal, state and local wage and hour laws. Applicable laws may include, but are not limited to, the Federal Fair Labor Standards Act and the California Labor Code.

Final Judgments, Decisions, and Orders: For purposes of this Section, a "final judgment, decision, or order" refers to one for which all appeals have been exhausted or the time to appeal has expired. Relevant investigatory government agencies include: the federal Department of Labor, the California Division of Labor Standards Enforcement, or any other governmental entity or division tasked with the investigation and enforcement of wage and hour laws.

Prior Judgments against Contractor and/or its Subcontractors: BY SIGNING THIS AGREEMENT, CONTRACTOR AFFIRMS THAT IT HAS DISCLOSED ANY FINAL JUDGMENTS, DECISIONS OR ORDERS FROM A COURT OR INVESTIGATORY GOVERNMENT AGENCY FINDING – IN THE FIVE (5) YEARS PRIOR TO EXECUTING THIS AGREEMENT – THAT CONTRACTOR OR ITS SUBCONTRACTOR(S) HAS VIOLATED ANY APPLICABLE WAGE AND HOUR LAWS. CONTRACTOR FURTHER AFFIRMS THAT IT OR ITS SUBCONTRACTOR(S) HAS SATISFIED AND COMPLIED WITH – OR HAS REACHED AGREEMENT WITH THE CITY REGARDING THE MANNER IN WHICH IT WILL SATISFY – ANY SUCH JUDGMENTS, DECISIONS OR ORDERS.

Judgments or Decisions During Term of Contract: If at any time during the term of this Agreement, a court or investigatory government agency issues a final judgment, decision or order finding that Contractor or an subcontractor it employs to perform work under this Agreement has violated any applicable wage and hour law, or Contractor learns of such a judgment, decision, or order that was not previously disclosed, Contractor shall inform the City Attorney, no more than fifteen (15) days after the judgment, decision or order becomes final or of learning of the final judgment, decision or order. Contractor and its subcontractors shall promptly satisfy and comply with any such judgment, decision, or order, and shall provide the City Attorney with documentary evidence of compliance with the final judgment, decision or order within five (5) days of satisfying the final judgment, decision or order. The City reserves the right to require Contractor to enter into an agreement with the City regarding the manner in which any such final judgment, decision, or order will be satisfied.

City's Right to Withhold Payment: Where Contractor or any subcontractor it employs to perform work under this Agreement has been found in violation of any

applicable wage and hour law by a final judgment, decision or order of a court or government agency, the City reserves the right to withhold payment to Contractor until such judgment, decision or order has been satisfied in full.

Material Breach: Failure to comply with any part of this Section constitutes a material breach of this Agreement. Such breach may serve as a basis for immediate termination of this Agreement and/or any other remedies available under this Agreement and/or law.

Notice to City Related to Wage Theft Prevention: Notice provided to the City Attorney as required under this Section shall be addressed to: City Attorney, City of Morgan Hill, 17575 Peak Avenue, Morgan Hill, CA 95037. The Notice provisions of this Section are separate from any other notice provisions in this Agreement and, accordingly, only notice provided to the above address satisfies the notice requirements in this Section.

## Article 10
## Safety Provisions

**10.1 Safety Precautions and Programs.** Contractor and its Subcontractors are fully responsible for safety precautions and programs, and for the safety of persons and property in the performance of the Work. Contractor and its Subcontractors must comply with all applicable safety laws, rules and regulations and seek to avoid injury, loss, or damage to persons or property by taking reasonable steps to protect its employees and other persons at the Worksite, materials and equipment stored on or off site, and property at or adjacent to the Worksite.

(A) ***Reporting Requirements.*** Contractor must immediately provide a written report to City of all recordable accidents and injuries occurring at the Worksite. If Contractor is required to file an accident report with a government agency, Contractor will provide a copy of the report to City.

(B) ***Legal Compliance.*** Contractor's safety program must comply with the applicable legal and regulatory requirements. Contractor must provide City with copies of all notices required by law or regulation.

(C) ***Contractor's Obligations.*** Any damage or loss caused by Contractor arising from the Work which is not insured under property insurance must be promptly remedied by Contractor.

(D) ***Remedies.*** If City determines, in its sole discretion, that any part of the Work or Worksite is unsafe, City may, without assuming responsibility for Contractor's safety program, require Contractor or its Subcontractor to cease performance of the Work or to take corrective measures to City's

satisfaction. If Contractor fails to promptly take the required corrective measures, City may perform them and deduct the cost from the Contract Price. Contractor agrees it is not entitled to submit a Claim for damages, for an increase in Contract Price, or for a change in Contract Time based on Contractor's compliance with City's request for corrective measures pursuant to this provision.

**10.2 Hazardous Materials.** Unless otherwise specified, this Contract does not include the removal, handling, or disturbance of any asbestos or other Hazardous Materials. If Contractor encounters materials on the Worksite that Contractor reasonably believes to be asbestos or other Hazardous Materials, and the asbestos or other Hazardous Materials have not been rendered harmless, Contractor may continue Work in unaffected areas reasonably believed to be safe, but must immediately cease work on the area affected and report the condition to City. No asbestos, asbestos-containing products or other Hazardous Materials may be used in performance of the Work.

**10.3 Material Safety.** Contractor must maintain Material Safety Data Sheets ("MSDS") at the Worksite, as required by law, for materials or substances used or consumed in the performance of the Work. The MSDS will be accessible and available to Contractor's employees, Subcontractors, and City.

(A) ***Contractor Obligations.*** Contractor is solely responsible for the proper delivery, handling, use, storage, removal, and disposal of all materials brought to the Worksite and/or used in the performance of the Work.

(B) ***Labeling.*** Contractor must ensure proper labeling on any material brought onto the Worksite so that any persons working with or in the vicinity of the material may be informed as to the identity of the material, any potential hazards, and requirements for proper handling, protections, and disposal.

## Article 11
## Completion and Warranty Provisions

**11.1 Final Completion.**

(A) ***Final Inspection.*** When the Work required by this Contract is fully performed, Contractor must provide written notification to Project Manager requesting final inspection. Based on this inspection, the Design Professional will prepare a punch list of items that are incomplete, incorrectly installed, or not operating as required by the Contract Documents. The omission of any such item from this punch list will not

relieve Contractor from fulfilling all requirements of the Contract Documents.

(B) ***Punch List.*** City will promptly deliver the punch list to Contractor and will specify the time by which all of the punch list items must be completed or corrected. The punch list may include City's estimated cost to complete each punch list item if Contractor fails to do so within the specified time.

(C) ***Requirements for Final Completion.*** Final Completion will be achieved upon completion or correction of all punch list items, as verified by inspection, and upon satisfaction of all other Contract requirements, including any commissioning required under the Contract Documents, and submission of all final submittals, including a warranty bond as required under Section 4.4, instructions and manuals as required under Section 7.10, and as-built drawings as required under Section 7.11, all to City's satisfaction. Once Final Completion is achieved, and the Project has been formally accepted by City, City will file a notice of completion with the County Recorder.

(D) ***Final Payment.*** Final Payment and release of retention, less any sums withheld pursuant to the provisions of the Contract Documents, will not be made sooner than thirty five (35) days after recordation of the notice of completion. If Contractor fails to complete all of the punch list items within the specified time, City may elect to accept the Project and record the notice of completion, and withhold up to one hundred fifty percent (150%) of City's estimated cost to complete the remaining items from Final Payment.

## 11.2 Warranty.

(A) ***General.*** Contractor warrants that all materials and equipment will be new unless otherwise specified, of good quality, in conformance with the Contract Documents, and free from defective workmanship and materials. Contractor further warrants that the Work will be free from material defects not intrinsic in the design or materials required in the Contract Documents. At City's request, Contractor must furnish satisfactory evidence of the quality and type of materials and equipment furnished. Contractor's warranty does not extend to damage caused by normal wear and tear, or improper use or maintenance.

(B) ***Warranty Period.*** Contractor's warranty must guarantee its Work for a period of one (1) year from the date of recordation of the notice of completion (the "Warranty Period"), except when a longer guarantee is provided by a supplier or manufacturer or is required by the Specifications or Special Conditions. Contractor must obtain from its Subcontractors,

suppliers and manufacturers any special or extended warranties required by the Contract Documents.

(C) ***Warranty Documents.*** As a condition precedent to acceptance, Contractor must supply City with all warranty and guarantee documents relevant to equipment and materials incorporated into the Work and guaranteed by their suppliers or manufacturers.

(D) ***Subcontractors.*** The warranty obligations in the Contract Documents apply to Work performed by Contractor and its Subcontractors, and Contractor expressly agrees to act as co-guarantor of such Work.

(E) ***Contractor's Obligations.*** Upon written notice from City to Contractor of any defect in the Work discovered during the Warranty Period, Contractor or its responsible Subcontractor must promptly correct the defective Work at its own cost. Contractor's obligation to correct defects discovered during the Warranty Period will continue past the expiration of the Warranty Period as to any defects in Work for which Contractor was notified prior to expiration of the Warranty Period.

(F) ***City's Remedies.*** If Contractor and/or its responsible Subcontractor fails to correct defective Work within ten (10) days following notice by City, or sooner, if required by the circumstances, Contractor expressly agrees that City may correct the defects to conform with Contract Documents at Contractor's sole expense, and Contractor agrees to reimburse City for its costs within thirty (30) days following City's submission of a demand for payment pursuant to this provision. If City is required to initiate legal action to compel Contractor's compliance with this provision, and City is the prevailing party in such action, Contractor is solely responsible for all of City's attorney's fees and legal costs expended to enforce Contractor's warranty obligations herein in addition to any and all costs incurred by City to correct the defective Work.

**11.3 Use Prior to Final Completion.** City reserves the right to occupy or make use of the Project, or any portions of the Project, prior to Final Completion if City has determined that the Project or portion of it is in a condition suitable for the proposed occupation or use, and that it is in its best interest to occupy or make use of the Project, or any portions of it, prior to Final Completion. City will notify Contractor in writing of its intent to occupy or make use of the Project or any portions of the Project, pursuant to this provision.

(A) ***Non-Waiver.*** Occupation or use prior to Final Completion will not operate as acceptance of the Work or any portion of it, nor will it operate as a waiver of any of City's rights or Contractor's duties pursuant to these

Contract Documents, and will not affect nor bear on the determination of the time of substantial completion with respect to any statute of repose pertaining to the time for filing an action for construction defect.

(B) ***City's Responsibility.*** City will be responsible for the cost of maintenance and repairs due to normal wear and tear with respect to those portions of the Project that are being occupied or used before final completion. The Contract Price or the Contract Time may be adjusted pursuant to the applicable provisions of these Contract Documents if, and only to the extent that, any occupation or use under this Section actually adds to Contractor's cost or time to perform the Work.

**11.4 Substantial Completion.** For purposes of determining "substantial completion" with respect to any statute of repose pertaining to the time for filing an action for construction defect, "substantial completion" is deemed to mean the last date that Contractor or any Subcontractor performs Work on the Project prior to recordation of the Notice of Completion, except for warranty work performed under this Article.

## Article 12
## Dispute Resolution

**12.1 Claims.** This Article applies to and provides the exclusive procedures for any Claim arising from or related to the Contract or performance of the Work.

(A) ***Definition.*** "Claim" means a separate demand by Contractor, submitted in writing, for change in the Contract Time or Contract Price that has previously been submitted to City in accordance with the requirements of the Contract Documents, and which has been rejected by City, in whole or in part.

(B) ***Limitations.*** A Claim may only include the portion of a previously rejected demand that remains in dispute between Contractor and City. With the exception of any dispute regarding the amount of money actually paid to Contractor as Final Payment, Contractor is not entitled to submit a Claim demanding a change in the Contract Time or the Contract Price, which has not previously been submitted to City in full compliance with Article 5 and Article 6, and subsequently rejected in whole or in part by City.

(C) ***Scope of Article.*** This Article is intended to provide the exclusive procedures for submission and resolution of Claims of any amount, and applies in addition to the provisions of Public Contract Code Section 9204 and Sections 20104 et seq.

(D) ***No Work Delay.*** Notwithstanding the submission of a Claim or any other dispute between the parties related to the Project or the Contract Documents, Contractor must perform the Work and may not delay or cease Work pending resolution of the Claim or other dispute, but must continue to diligently prosecute the performance and timely completion of the Work, including the Work pertaining to the Claim or other dispute.

**12.2 Claims Submission.** The following requirements apply to any Claim subject to this Article:

(A) ***Substantiation.*** The Claim must be submitted to City in writing, clearly identified as a "Claim" submitted pursuant to this Article 12, and must include all of the documents necessary to substantiate the Claim including the Change Order request that was rejected in whole or in part, and copy of the City's written rejection that is in dispute. The Claim must clearly identify and describe the dispute, including relevant references to applicable portions of the Contract Documents, and a chronology of relevant events. Any Claim for additional payment must include a complete, itemized breakdown of all labor, materials, taxes, insurance, and subcontract, or other costs. Substantiating documentation such as payroll records, receipts, invoices, or the like, must be submitted in support of each claimed cost. Any Claim for an extension of time or delay costs must be substantiated with schedule analysis and narrative depicting and explaining claimed time impacts.

(B) ***Claim Format.*** A Claim must be submitted in the following format:

(1) General introduction, specifically identifying the submission as a "Claim" submitted under this Article 12.

(2) Relevant background information, including identification of the specific demand at issue, and the date of City's rejection of that demand.

(3) Detailed explanation of the issue(s) in dispute. For multiple issues, separately number and identify each issue and include the following for each separate issue:

(a) The background of the issue, including references to relevant provisions of the Contract Documents;

(b) A succinct statement of the matter in dispute, including Contractor's position and the basis for that position;

(c) A chronology of relevant events;

(d) The identification and attachment of all supporting documents (see subsection (A), above, on Substantiation); and

(e) Use of a separate page for each issue.

(4) Summary of issues and damages.

(5) The following certification, executed by Contractor's authorized representative:

"The undersigned Contractor certifies under penalty of perjury that its statements and representations in this Claim are true and correct. Contractor warrants that this Claim is comprehensive and complete as to the matters in dispute, and agrees that any costs, expenses, or delay claim not included herein are deemed waived. Contractor understands that submission of a Claim which has no basis in fact or which Contractor knows to be false may violate the False Claims Act (Government Code Section 12650 et seq.)."

(C) ***Submission Deadlines.***

(1) A Claim must be submitted within fifteen (15) days following the date that City notified Contractor in writing that a request for a change in the Contract Time or Contract Price, duly submitted in compliance with Article 5 and Article 6, has been rejected in whole or in part.

(2) With the exception of any dispute regarding the amount of Final Payment, any Claim must be filed on or before the date of Final Payment, or will be deemed waived.

(3) A Claim disputing the amount of Final Payment must be submitted within fifteen (15) days of the effective date of Final Payment, under Section 8.8, above.

(4) Strict compliance with these Claim submission deadlines is necessary to ensure that any dispute may be mitigated as soon as possible, and to facilitate cost-efficient administration of the Project. Any Claim that is not submitted within the specified deadlines will be deemed waived by Contractor.

**12.3 City's Response.** City will respond within forty five (45) days of receipt of the Claim with a written statement identifying which portion(s) of the Claim are disputed, unless the forty five (45)-day period is extended by mutual

agreement of City and Contractor. However, the City may first request, in writing, within thirty (30) days of receipt of the Claim, any additional documentation supporting the Claim or relating to defenses to the Claim that City may have against Contractor. If Contractor fails to submit the additional documentation to City within fifteen (15) days of receipt of City's request, the Claim will be deemed waived.

(A) ***Additional Information.*** If additional information is thereafter required, it may be requested and provided upon mutual agreement of City and Contractor.

(B) ***City's Response.*** City's written response to the Claim, as further documented, will be submitted to Contractor within fifteen (15) days after receipt of the further documentation or within a period of time no greater than that taken by Contractor in producing the additional information, whichever is greater.

(C) ***Non-Waiver.*** Any failure by City to respond within the times specified above may not be construed as acceptance of the Claim in whole or in part, or as a waiver of any provision of these Contract Documents.

**12.4 Meet and Confer.** If Contractor disputes City's written response, or City fails to respond within the specified time, Contractor must notify City in writing, either within fifteen (15) days of receipt of City's response, or within fifteen (15) days of City's failure to respond within the specified time, respectively, and demand an informal conference to meet and confer for settlement of the issues in dispute. If Contractor fails to dispute City's response, in writing, within the specified times, Contractor's Claim will be deemed waived.

(A) ***Schedule Meet and Confer.*** Upon receipt of the demand to meet and confer, City will schedule the meet and confer conference to be held within thirty (30) days, or later if needed to ensure the mutual availability of all of the individuals that each party requires to represent its interests at the meet and confer conference.

(B) ***Location for Meet and Confer.*** The meet and confer conference will be scheduled at a location at or near City's principal office.

(C) ***Written Statement After Meet and Confer.*** Within ten (10) working days after the meet and confer has concluded, City will issue a written statement identifying which portion(s) of the Claim remain in dispute, if any.

(D) ***Submission to Mediation.*** If the Claim or any portion remains in dispute following the meet and confer conference, within ten (10) working

days after the City issues the written statement identifying any portion(s) of the Claim remaining in dispute, the disputed portion(s) will be submitted for mediation as set forth below.

**12.5 Mediation and Government Code Claims.**

(A) ***Mediation.*** Mediation under this Article will be scheduled within sixty (60) days following conclusion of the meet and confer process, with a mediator that the parties mutually agreed upon. The mediation itself may take place more than sixty (60) days following conclusion of the meet and confer process to ensure the mutual availability of the selected mediator and all of the individuals that each party requires to represent its interests. The parties must share the costs of mediation equally, except costs incurred by each party for representation by legal counsel or any other consultant.

(B) ***Government Code Claims***.

(1) Timely presentment of a Government Code Claim is a condition precedent to filing any legal action based on or arising from the Contract.

(2) The time for filing a Government Code Claim will be tolled from the time Contractor submits its written Claim pursuant to Section 12.2, above, until the time that Claim is denied as a result of the meet and confer process, including any period of time used by the meet and confer process. If the parties agree to mediation, the time for filing a Government Code Claim will be tolled until conclusion of the mediation if the Claim is not fully resolved by mutual agreement of the parties during the mediation or any continuation of the mediation.

**12.6 Tort Claims.** This Article does not apply to tort claims and nothing in this Article is intended nor will be construed to change the time periods for filing tort-based Government Code Claims.

**12.7 Arbitration.** It is expressly agreed, under California Code of Civil Procedure Section 1296, that in any arbitration to resolve a dispute relating to this Contract, the arbitrator's award must be supported by law and substantial evidence.

**12.8 Damages.** Contractor bears the burden of proving entitlement to and the amount of any claimed damages. Contractor is not entitled to damages calculated on a total cost basis, but must prove actual damages. Contractor is not entitled to recovery of any alleged home office overhead. The Eichleay Formula or similar formula may not be used for any recovery

under the Contract. Contractor is not entitled to consequential damages, including home office overhead or any form of overhead not directly incurred at the Worksite; lost profits; loss of productivity; lost opportunity to work on other projects; diminished bonding capacity; increased cost of financing for the Project; extended capital costs; non-availability of labor, material or equipment due to delays; or any other indirect loss arising from the Contract.

**12.9 Other Disputes.** The procedures in this Article 12 will apply to any and all disputes or legal actions, in addition to Claims, arising from or related to this Contract, unless and only to the extent that compliance with a procedural requirement is expressly and specifically waived by City. Nothing in this Article is intended to delay suspension or termination under Article 13.

## Article 13
## Suspension and Termination

**13.1 Suspension for Cause.** In addition to all other remedies available to City, if Contractor fails to perform or correct work in accordance with the Contract Documents, City may immediately order the Work, or any portion of it, suspended until the cause for the suspension has been eliminated to City's satisfaction.

(A) ***Failure to Comply.*** Contractor will not be entitled to an increase in Contract Time or Contract Price for a suspension occasioned by Contractor's failure to comply with the Contract Documents.

(B) ***No Duty to Suspend.*** City's right to suspend the Work will not give rise to a duty to suspend the Work, and City's failure to suspend the Work will not constitute a defense to Contractor's failure to comply with the requirements of the Contract Documents.

**13.2 Suspension for Convenience.** City reserves the right to suspend, delay, or interrupt the performance of the Work in whole or in part, for a period of time determined to be appropriate for City's convenience, and not due to any act or omission by Contractor or its Subcontractors. Upon notice by City pursuant to this provision, Contractor must immediately suspend, delay, or interrupt the Work as directed by City. The Contract Price and the Contract Time will be equitably adjusted by Change Order to reflect the cost and delay impact occasioned by such suspension for convenience.

**13.3 Termination for Default.** Contractor may be deemed in default for a material breach of or inability to perform the Contract, including Contractor's refusal or failure to supply sufficient skilled workers, proper materials, or equipment to perform the Work within the Contract Time;

refusal or failure to make prompt payment to its employees, Subcontractors, or suppliers or to correct rejected work; disregard of laws, regulations, ordinances, rules, or orders of any public agency with jurisdiction over the Project; or if Contractor lacks financial capacity to complete the Work within the Contract Time; or is otherwise responsible for a material breach of the Contract requirements.

(A) ***Notice.*** Upon City's determination that Contractor is in default, City may provide Contractor and its surety written notice of default and intent to terminate the Contract.

(B) ***Termination.*** Within seven (7) calendar days after notice of intent to terminate for default has been given, unless the default is cured or arrangements to cure the default have been made and memorialized in writing, to City's satisfaction, City may terminate the Contract by written notice to Contractor with a copy to Contractor's surety.

(C) ***Waiver.*** Time being of the essence in the performance of the Work, if Contractor's surety fails to arrange for completion of the Work in accordance with the Performance Bond, within seven (7) calendar days from the date of the notice of termination, Contractor's surety will be deemed to have waived its right to complete the Work under the Contract, and City may immediately make arrangements for the completion of the Work through use of its own forces, by hiring a replacement contractor, or by any other means that City determines advisable under the circumstances. Contractor and its surety will be jointly and severally liable for any additional cost incurred by City to complete the Work following termination. In addition, City will have the right to use any materials, supplies, and equipment belonging to Contractor and located at the Worksite for the purposes of completing the remaining Work.

(D) ***Wrongful Termination.*** If a court of competent jurisdiction or an arbitrator later determines that the termination for default was wrongful, the termination will be deemed to be a termination for convenience, and Contractor's damages will be strictly limited to the compensation provided for termination for convenience, in Section 13.4, below. Contractor waives any claim for any other damages for wrongful termination including consequential damages, lost opportunity costs or lost profits.

**13.4 Termination for Convenience.** City reserves the right to terminate all or part of the Contract for convenience upon written notice to Contractor. Upon receipt of such notice, Contractor must immediately stop the Work, comply with City's instructions to protect the completed Work and materials, and use its best efforts to minimize further costs. In the event of termination for convenience, the parties agree that the following will

constitute full and fair compensation to Contractor, and that Contractor will not be entitled to any additional compensation:

(A) ***Completed Work.*** The value of its Work satisfactorily performed to date, including Project overhead and profit based on Contractor's schedule of values;

(B) ***Demobilization.*** Actual and substantiated demobilization costs; and

(C) ***Markup.*** Five percent (5%) of the total value of the Work performed as of the date of notice of termination or five percent (5%) of the value of the Work yet to be completed, whichever is less.

**13.5 Provisions Remaining in Effect.** Upon termination pursuant to this Article, the provisions of the Contract Documents remain in effect as to any claim, indemnity obligation, warranties, guarantees, submittals of as-built drawings, instructions, or manuals, or other such rights and obligations arising prior to the termination date.

## Article 14
## Miscellaneous Provisions

**14.1 Assignment of Unfair Business Practice Claims.** Under Public Contract Code Section 7103.5, Contractor and its Subcontractors agree to assign to City all rights, title, and interest in and to all causes of action it may have under Section 4 of the Clayton Act (15 U.S.C. Section 15) or under the Cartwright Act (Chapter 2 (commencing with Section 16700) of Part 2 of Division 7 of the Business and Professions Code), arising from purchases of goods, services, or materials pursuant to the Contract or subcontract. This assignment will be effective at the time City tenders Final Payment to Contractor, without further acknowledgement by the parties.

**14.2 Provisions Deemed Inserted.** Every provision of law required to be inserted in the Contract Documents is deemed to be inserted, and the Contract Documents will be construed and enforced as though such provision has been included. If it is discovered that through mistake or otherwise that any required provision was not inserted, or not correctly inserted, the Contract Documents will be amended accordingly.

**14.3 Waiver.** No waiver of a breach, failure of any condition, or any right or remedy contained in or granted by the provisions of the Contract Documents will be effective unless it is in writing and signed by the party waiving the breach, failure, right, or remedy. No waiver of any breach,

failure, right, or remedy will be deemed a waiver of any other breach, failure, right, or remedy, whether or not similar, nor will any waiver constitute a continuing waiver unless specified in writing by the waiving party.

**14.4 Titles, Headings, and Groupings.** The titles and headings used and the groupings of provisions in the Contract Documents are for convenience only and may not be used in the construction or interpretation of the Contract Documents or relied upon for any other purpose.

**14.5 Statutory and Regulatory References.** With respect to any amendments to any statutes or regulations referenced in these Contract Documents, the reference is deemed to be the version in effect on the date that that bids were due.

END OF GENERAL CONDITIONS

# SPECIAL CONDITIONS

1.2 **Shop Drawings.** Whenever Shop Drawings are required by the Contract Documents or by the Engineer, Contractor must submit five (5) prints of each shop drawing to the Engineer.

(A) If three (3) prints of the drawing are returned to Contractor marked "NO EXCEPTIONS TAKEN," further revision of the drawings will not be required. If one (1) print of the drawing is returned to Contractor marked "REVISE AND RESUBMIT," Contractor must revise the drawing and resubmit five (5) copies of the revised drawing to the Engineer. City reserves the right to withhold payment due Contractor to cover additional costs of the Engineer's review beyond the second submission.

(B) Fabrication of an item may not commence before the Engineer has reviewed the pertinent shop drawings and returned copies to Contractor marked either "NO EXCEPTIONS TAKEN" or "MAKE CORRECTIONS NOTED."

(C) Revisions indicated on shop drawings are deemed necessary to meet the existing requirements of the Contract Documents and may not be taken as the basis of claims for extra Work. Contractor is not entitled to claim for damages or extension of time due to any delay resulting from making the required revisions to shop drawings. The Engineer's review of the shop drawings does not relieve Contractor of responsibility for any errors or omissions contained in the shop drawings nor will such review operate to waive or modify any provision contained in the Contract Documents.

7.___ ***Waste Water.*** City will provide water required for performance of the Work. Contractor is responsible for the appropriate disposal of waste water in coordination with City personnel. Contractor must provide a backflow preventer on all point of connections to City's Water System. All backflow preventers must be checked and approved by City's Public Works Water Division. Contractor must provide a deposit (refundable) and make necessary arrangements to pick up a hydrant meter at City's Public Works Office. At the completion of the Project, if the hydrant meter is not returned promptly or if it is damaged, Contractor shall forfeit its deposit.

7.___ ***Equipment.*** Contractor must provide and use equipment and plants suitable to produce the quality of Work and materials required by the Contract Documents. Contractor may be required to remove equipment which the Engineer deems unsuitable for the Work. Contractor must ensure that equipment is operated by trained, experienced operators, and at a speed or rate of production not to exceed that

recommended by the manufacturer. Any vehicles used to haul materials over existing streets and highways must be equipped with pneumatic tires.

7.__ **Lines and Grades.** The Engineer will set the stakes or marks necessary to establish the lines and grades required for the completion of the Work in accordance with the Contract Documents. Contractor must give at least two (2) working days' notice to the Engineer of the need for setting any lines and grades.

(A) ***Measurements.*** Distances and measurements are given and will be made in a horizontal plane. Grades are given from the top of stakes or nail unless otherwise noted. Three (3) consecutive points shown on the same rate of slope must be used in common in order to detect any variation from a straight grade. Any variation from a straight grade, straight slope or line, must be reported to the Engineer. If such discrepancy is not reported to the Engineer, Contractor is responsible for any error in the finished work.

(B) ***Stakes.*** Contractor must preserve all stakes and points set for lines, grades or measurements of the Work in their proper places until authorized by the Engineer to remove them. All expense incurred by replacing stakes that have been removed without proper authority may be deducted from any payment due to Contractor.

7.__ **Disposal of Materials Outside of Street Right-of-Way.** Unless otherwise specified in the Specifications or Special Conditions, Contractor is solely responsible for disposing of materials outside the street right-of-way and for all associated costs. Before disposing materials outside the street right-of-way, Contractor must 1) obtain a written release from the property owner releasing City from any and all responsibility in connection with the disposal of material on that property; and 2) obtain permission from the Engineer to dispose of the material at the permitted location.

7.__ **Emergency Contact.** Prior to the commencement of Work on the Project, Contractor must provide contact information to the Engineer for the person designated by Contractor to respond to any emergency that arises on the Worksite during the course of the Project. That person will be responsible for responding to the Worksite within thirty (30) minutes following notification of an emergency by City's Police or Fire Department, regardless of the time of day.

7.__ **Right-of-Way.** City will provide the right-of-way for performance of the Work. Contractor is solely responsible for any additional area required outside of the designated the right-of-way, unless otherwise provided in the Contract Documents.

(A) ***Environmental Control.*** Contractor must not pollute any drainage course or its tributary inlets with fuels, oils, bitumens, acids, insecticides, herbicides or other harmful materials. Contractor and its subcontractors shall at all times in the performance of the Work comply with all applicable federal, state, and local laws and regulations concerning pollution of waterways.

**__. Authorized Work Days and Hours.**

(A) ***Authorized Work Days.*** Except as expressly authorized in writing by City, Contractor is limited to performing Work on the Project on the following days of the week, excluding holidays observed by City:

Monday through Friday

(B) ***Authorized Work Hours.*** Except as expressly authorized in writing by City, Contractor is limited to performing Work on the Project during the following hours:

7am to 5pm

5.__ **Weather Delays.** This provision is intended to supplement the requirements of General Conditions Section 5.2 on Schedule Requirements and Section 5.3 on Delays and Extensions of Contract Time.

(A) ***Weather Delay Day.*** A Weather Delay Day is a Working Day during which Contractor and its forces, including Subcontractors, are unable to perform more than forty percent (40%) of the critical path Work scheduled for that day due to adverse weather conditions which impair the ability to safely or effectively perform the scheduled critical path Work that day. Adverse weather conditions may include rain, saturated soil, and Worksite clean-up required due to adverse weather. Determination of what constitutes critical path Work scheduled for that day will be based on the most current, City-approved schedule.

(B) ***Normal Weather Delay Days.*** Based on historic records for the Project location, Contractor's schedule should assume the following number of normal Weather Delay Days for each month:

| Month | # Normal Weather Delay Days |
|---|---|
| January | 11 |
| February | 11 |
| March | 10 |
| April | 6 |
| May | 4 |
| June | 2 |
| July | 1 |
| August | 1 |
| September | 1 |
| October | 4 |
| November | 7 |

December 10

(C) ***Extension of Time.*** Contractor will be entitled to a non-compensable extension of the Contract Time for each Weather Delay Day in excess of the normal Weather Delay Days within a given month, as set forth in Section __.2 above, subject to the following limitations:

(1) Contractor must fully comply with the applicable procedures in Article 5 and 6 of the General Conditions regarding requests to modify the Contract Time.

(2) Normal Weather Delay Days which do not occur during a given month do not carry over to another month.

(3) Contractor will not be entitled to an extension of time for a Weather Delay Day to the extent Contractor is responsible for concurrent delay on that day.

---

END OF SPECIAL CONDITIONS

## TECHNICAL PROVISIONS

## GENERAL REQUIREMENTS

### 1.01 ORDER OF WORK

a. Description: Order of work shall conform to the provisions in Section 5-1.05, "Order of Work," of the Standard Specifications and these special provisions.

The Contractor shall be responsible for submitting the following information to the City:

1. The Contractor shall provide to the City a Construction Schedule **10 calendar days prior to the Contractor performing any work on the project site**. The Schedule shall include the following information**:**
   - Detail all stages of construction
   - Time frame/duration of stages

2. The Contractor shall provide to the City a Notice to Businesses and Residences **7 calendar days prior to setting any stage construction components**. One copy (hard copy and electronic form) of the Notice shall be provided and contain the following information:
   1. Introduction of Contractor
   2. Project description
   3. Project begin and end construction dates/duration
   4. Project staging descriptions/limits

If sanitary sewer facilities are to be impacted, upon scheduled date of the preconstruction meeting, Contractor shall develop, prepare and submit a Sanitary Sewer Replacement Logistics Plan (SSRLP) to the Engineer for review and approval. The SSRLP shall show contractor's construction methodology to be implemented in order to maintain Sanitary Sewer service throughout construction.

Upon a scheduled date of the preconstruction meeting, Contractor shall provide a construction schedule as specified in Section 1.09, Progress Schedule of these Technical Provisions, for the Engineer's approval.

Contractor shall notify and distribute notices to all affected residents and businesses a minimum of 48 hours but no earlier than 72 hours prior to affecting the resident's or business' in anticipation of the project.

Contractor shall meet with the Project Engineer weekly to go over the project schedule, and discuss project progress, duration, issues, etc.

Utility boxes, vaults, and valve covers are intended to be constructed to future grades.

The contractor shall perform all work for the project between 7AM to 5PM, Monday through Friday, unless otherwise directed and approved by the Engineer. Unless authorized by the Engineer, there shall be no work performed at night or on Saturday, Sunday or Public Holidays. If authorized by the Engineer, night work shall be conducted between 10PM to 6AM, Monday through Friday only. The contractor shall not work on City observed holidays.

b. Measurement and Payment: Full compensation for conforming to the provisions in this section "Order of Work" including development, preparation and coordination with utility companies and contractors, and notification to all affected residents and businesses shall be considered as **included in the lump sum price** paid for the **Centennial Recreation Center Expansion Project** and no additional compensation will be allowed therefore.

## 1.04 EXCAVATION SAFETY PLANS

**a.** Description: Section 5-1.02A, "Trench Excavation Safety Plans," of the CSS is amended to read:

5-1.02A EXCAVATION SAFETY PLANS

- The Contractor is solely responsible for excavation safety, including support to all adjacent improvements. This requirement is continuous and not limited to normal working hours.
- The Construction Safety Orders of the Division of Occupational Safety and Health shall apply to all excavations. For all excavations 5-feet or more in depth, the Contractor shall submit to the Engineer a detailed plan showing the design and details of

the protective systems to be provided for worker protection from the hazard of caving ground during excavation. The detailed plan shall include any tabulated data and any design calculations used in the preparation of the plan. Excavation shall not begin until the detailed plan has been reviewed and approved by the Engineer.

- Detailed plans of protective systems for which the Construction Safety Orders require design by a registered professional engineer shall be prepared and signed by an engineer who is registered as a Civil Engineer in the State of California, and shall include the soil classification, soil properties, soil design calculations that demonstrate adequate stability of the protective system, and any other design calculations used in the preparation of the plan.
- No plan shall allow the use of a protective system less effective than that required by the Construction Safety Orders.
- If the detailed plan includes designs of protective systems developed only from the allowable configurations and slopes, or Appendices, contained in the Construction Safety Orders, the plan shall be submitted at least 5 days before the Contractor intends to begin excavation. If the detailed plan includes designs of protective systems developed from tabulated data, or designs for which design by a registered professional engineer is required, the plan shall be submitted at least 3 weeks before the Contractor intends to begin excavation.
- Attention is directed to Section 7-1.01E, "Trench Safety" of the Standard Specifications.

**b.** Measurement and Payment: Full compensation for conforming to the provisions in this section "Excavation Safety Plans" shall be considered as included in the contract prices paid as **included in the lump sum price** paid for the **Centennial Recreation Center Expansion Project** and no additional compensation will be allowed therefor.

## 1.05 DUST CONTROL

**a.** Description: Dust control shall conform to the provisions in Section 10, "Dust Control," of the Standard Specifications and these Technical Provisions.

**b.** Measurement and Payment: Full compensation for conforming to the provisions in this section "Dust Control" shall be considered as included in the contract prices paid considered as **included in the lump sum price** paid for the **Centennial Recreation Center Expansion Project** and no additional compensation will be allowed therefor.

## 1.06 WATER POLLUTION CONTROL

**a.** General: Water pollution control work shall conform to the provisions in Section 7-1.01G, "Water Pollution," of the Standard Specifications and these specifications.

For the entire duration of construction activities for this project, the California Stormwater Quality Association (CASQA) Best Management Practice (BMP) Handbook for construction shall be used. Furthermore, contractor is fully responsible to provide erosion and sediment control for the entire construction site at all times. Contractor shall be responsible for initiating the required control measures. CASQA BMP information can be viewed and downloaded at

**http://cabmphandbooks.com**

The Contractor shall know and fully comply with the applicable provisions of the Manuals and Federal, State, and local regulations that govern the Contractor's operations and storm water discharges from both the project site and areas of disturbance outside the project limits during construction.

Under no circumstances, shall concrete wash water, water from sawcutting operations or any other contaminated water be allowed to enter the storm drain system or other drainage courses.

The City assumes no responsibility whatsoever to the Contractor or a property owner with respect to any arrangements made between the Contractor and the property owner to allow disturbance of areas outside the project limits.

The Contractor shall be responsible for the costs and for liabilities imposed by law as a result of the Contractor's failure to comply with the requirements set forth in this section "Water Pollution Control" including, but not limited to, compliance with the applicable provisions of the Manuals and Federal, State, and local regulations. For the purposes of this paragraph, costs and liabilities include, but are not limited to, fines, penalties, and damages whether assessed against the City or the Contractor, including those levied under the Federal Clean Water Act and the State Porter Cologne Water Quality Act.

In addition to the remedies authorized by law, an amount of the money due the Contractor under the contract, as determined by the City, may be retained by the City disposition has been made of the costs and liabilities.

The retention of money due the Contractor shall be subject to the following:

1) The City will give the Contractor 30 days notice of the City's intention to retain funds from partial payments, which may become due to the Contractor prior to acceptance of the contract. Retention of funds from payments made after acceptance of the contract may be made without prior notice to the Contractor.
2) No retention of additional amounts out of partial payments will be made if the amount to be retained does not exceed the amount being withheld from partial payments pursuant to Section 9-1.06, "Partial Payments," of the Standard Specifications.
3) If the City has retained funds and it is subsequently determined that the City is not subject to the costs and liabilities in connection with the matter for which the retention was made, the City shall be liable for interest on the amount retained at the legal rate of interest for the period of the retention.

Conformance with the provisions in this section "Water Pollution Control" shall not relieve the Contractor from the Contractor's responsibilities as provided in Section 7, "Legal Relations and Responsibilities," of the Standard Specifications.

b. Measurement and Payment: Full compensation for water pollution control, including furnishing all labor, materials tools, equipment, and incidentals, and for doing all the work involved in planning, implementing, and maintaining of the water pollution control shall be considered as **included in the lump sum price** paid for the **Centennial Recreation Center Expansion Project** and no separate payment will be made therefor.

## 1.07 DAMAGE REPAIR

**a.** Description: Attention is directed to Section 7-1.16, “Contractor’s Responsibility for the Work and Materials,” and Section 7-1.11, “Preservation of Property,” of the Standard Specifications and these Technical Provisions. Attention is also directed to Section 1.01, “Order of Work” in these Technical Provisions.

Any damage to existing facilities or properties or any need to alter, remove, or destroy existing facilities during the period of the work shall be returned to the original condition.

**b.** Measurement and Payment: All damage to existing facilities shall be repaired and or replaced at the Contractor’s expense.

## 1.08 RESPONSIBILITY FOR DAMAGE

**a.** General: Responsibility for damage shall conform to the provisions in Section 7-1.12, “Responsibility for Damage,” of the Standard Specifications.

## 1.09 PROGRESS SCHEDULE

a. General: The progress schedule shall be in accordance with Section 8-1.04 of the CSS. Furthermore, on a weekly basis, the schedule shall be updated and submitted to the Engineer. This update shall show the progress on salient features, mark the dates of completion and incorporate changes in construction sequencing or in items of construction.

b. Format: The construction schedule shall be a CPM format. The schedule shall be submitted in the following formats: Time-scaled Logic Diagram showing the name of the activity, the logical relationships, the duration, and the actual or scheduled start dates in a bar chart format; and an Activity Report showing the name of the activity, the actual and scheduled finish and start dates, the scheduled and actual durations, the logical relationships and other pertinent data. The schedule shall be subject to review, correction and acceptance by the Engineer.

c. Periodic Scheduling Meetings: Weekly scheduling meetings will be required in which the project teams of the Contractor and his agents and the City can meet to discuss the schedule and progress of project.

d. Measurement and Payment: Full compensation for conforming to the provisions in this section "Progress Schedule” shall be considered as included in the contract prices paid for the various items of work involved and no additional compensation will be allowed therefor.

## 1.10 COORDINATION OF WORK

**a.** Description: The Contractor shall give specified notifications, and withdraw his forces from work areas for the specified time windows for utility companies to perform specified relocation activities. The Contractor shall otherwise coordinate their operations with those of utility companies.

The Contractor shall also be responsible for coordinating the work with businesses and property owners including the shut-downs by written notification. All properties affected by shutdowns shall be notified in writing, 48 hours prior to the interruption. The contractor shall attempt to notify the affected occupants or residents, in person, on the same day of the shut down.

Contractor and Engineer shall meet with all affected businesses to coordinate construction schedule, hours of work, maintaining of

ingress/egress and reconstruction and replacement intentions to businesses' facilities that will be impacted during construction.

Failure to notify property owners with written notification shall result in stopping the project progress.

**b.** Measurement and Payment: Full compensation for conforming to the provisions in this section "Coordination of Work" shall be considered as **included in the lump sum price** paid for the **Centennial Recreation Center Expansion Project** and no additional compensation will be allowed therefor.

## 1.11 FINAL CLEAN UP

**a.** Description: The Contractor shall clean up all rubbish and excess materials from the work site, the material storage site, and all ground occupied by Contractor in connection with this work. The Contractor shall leave all parts of the work in a neat and presentable condition, prior to the final inspection of the work by the Engineer.

**b.** Measurement and Payment: Full compensation for conforming to the provisions in this section "Final Clean Up" shall be considered as **included in the lump sum price** paid for the **Centennial Recreation Center Expansion Project** and no additional compensation will be allowed therefor.

## 1.12 PROJECT RECORDS AND SUBMITTALS

**a.** Description: This section delineates the procedure the Contractor is to adhere to in the submission of documentation for material approval, and covers the records required of the Contractor following completion of the work.

a. Submittals

b. Progress Schedule:
Within 7 days after receiving the Notice to Proceed and before any work is begun, the Contractor shall submit four copies of a Progress Schedule complying with Section 1.09 of these Technical Provisions. The first progress payment will not be issued until the progress schedule is submitted.

c. Supervisory Personnel:
The Contractor shall submit a list of supervisory personnel who will be responsible for the performance of the Contract. The Contractor

shall designate one (1) person who will have full decision' making authority to represent the Contractor on a daily basis at the project site. The list will include phone numbers where the personnel may be reached by the Engineer.

d. Shop Drawings:

The term "shop drawings" includes drawings, diagrams, layouts, schematics, descriptive literature, illustrations, schedules, performance and test data, and similar materials furnished by the Contractor to explain in detail specific portions of the work required by the Contract. City shall have up to 20 days to review the shop drawings.

At least 15 working days prior to ordering of any materials, the Contractor shall forward to Engineer, for approval, all submittals required by the individual sections of the specifications. Unless a different number is called for by an individual section, six (6) copies of each shop drawing, material description, and specification literature and three specimens of each sample are required, all of which will be retained or distributed by the Engineer. The Contractor shall submit whatever additional number of shop drawings and literature, in addition to the above requirements, that the Contractor wants returned. The Engineer may require the Contractor to submit a legible reproducible print in addition to the above copies. Contractor shall number each type of material separately and identify the use of each material.

All submittals shall be transmitted to the Engineer by mail or in person with the letter of transmittal included in these documents. The Engineer will return all reviewed submittals to the Contractor within 10 working days.

Contractor shall coordinate all such drawings, and review them for legibility, accuracy, completeness, and compliance with contract requirements, and shall indicate approval thereon as evidence of such coordination and review. Shop drawings submitted to the Engineer without evidence of the Contractor's approval will be returned for resubmission.

Approval by the Engineer shall not relieve the Contractor from responsibility for any errors or omissions in such drawings, nor from responsibility for complying with requirements of this Contract, except with respect to variations described and approved in accordance with the Paragraph below.

If shop drawings show variations from contract requirements, the Contractor shall describe such variations in writing, separate from the drawings, at time of submission. All such variation must be approved by the Engineer.

e. Engineer's Approval:
The Engineer will indicate approval or disapproval of each submittal, and the reasons for disapproval.

a) If no corrections are required, the copies will be returned marked "NO EXCEPTIONS TAKEN" and work may begin immediately on incorporating the material and equipment covered by the submittal into the project.

b) If limited corrections are required, the copies will be returned marked "MAKE CORRECTIONS NOTED." Work may begin immediately on incorporating the material and equipment covered by the corrected submittal into the project.

c) If insufficient or incorrect data has been submitted, the copies will be returned marked "AMEND & RESUBMIT." No work incorporating the material and equipment covered by this submittal into the project may begin until the submittal has been revised, resubmitted, and returned marked either "NO EXCEPTIONS TAKEN" or "MAKE CORRECTIONS NOTED."

d) If the submittal is unacceptable, the copies will be returned marked "REJECTED - SEE REMARKS." No work incorporating the material and equipment covered by this submittal into the project may begin until a new submittal has been made and returned marked either "NO EXCEPTIONS TAKEN" or "MAKE CORRECTIONS NOTED."

e) The Contractor shall not change any drawing after it has been marked “NO EXCEPTIONS TAKEN” or “MAKE CORRECTIONS NOTED” or change any approved equipment or material without written permission of Engineer.

f) If more than three submittals for a single item are required because of incorrect or insufficient data, or the submittal is unacceptable, or because the Contractor wishes to change previously approved material, then all costs incurred by the Engineer for the additional review shall be deducted from monies due the Contractor.

f. Certificates:

For those items called for in individual sections, the Contractor must furnish certificates from manufacturers, suppliers, or others certifying that materials or equipment being furnished under the Contract comply with the requirements of these specifications.

Certificates of compliance shall conform to the provisions in Section 6-1.07 "Certificates of Compliance" of the Caltrans Standard Specifications and these specifications.

Certificates of compliance from the Contractor, suppliers, and/or manufacturers, shall clearly indicate that the material to be delivered to the jobsite will meet all requirements of the specifications. A certificate of compliance shall include, but not be limited to the project title, delivery location, date (or approximate date) of delivery, name of the material with appropriate classification or model numbers, quantity, name of the manufacturer, statement of compliance with all requirements of the specifications, and certifier's name, title and signature. In addition, a factory or mill certification (laboratory test report), if required by the specifications, shall be submitted with certificate of compliance. The factory or mill shall not substitute the certificate of compliance, unless it contains all information required for a certificate of compliance as described above.

Insufficient, incomplete, or unclear certificates shall be rejected and shall be resubmitted. The Contractor shall be responsible for all delays caused by the resubmittals.

g. Samples:

For those items called for in individual sections, the Contractor must furnish samples. Samples shall be of sufficient size to clearly illustrate functional characteristics and full range of color, texture, and pattern.

The Contractor shall notify the Engineer at least one (1) week prior to commencement of the construction and shall furnish the Engineer at least one (1) day notice when inspections are required.

h. Records:

The Contractor shall provide, prior to acceptance of all work, all records as herein specified and as specified in the individual sections of the contract documents. Six (6) sets of all records shall be furnished to the Engineer for review, approval and distribution to the interested parties.

All submitted records shall be contained in a manual or manuals

consisting of 8-1/2 x 11 inch hardback 3 ring binders. Included in each manual shall be catalog data on each item, together with parts lists, description of operation, maintenance information, shop drawings, wiring and riser diagrams, along with all test data. Catalogs and data in the manual shall be neat, clean copies. Drawings shall be accordion folded to letter size and installed in an envelope within the manual. An index shall be provided, which shall list all contents in an orderly manner, with the respective equipment suppliers' name, address and telephone number. The manufacturer's recommended servicing instructions shall also be included. Diagrams shall be complete for each system installed. Provide divider sheets with identifying tabs between each category.

i. As-Built Drawings:

The Contractor shall maintain a separate, neat, and legible set of construction drawings showing as built conditions of all constructed facilities. Changes shall be shown to scale in red on the appropriate Drawings. The locations of installed underground and hidden utilities will be shown and dimensioned to appropriate reference points. No work shall be permanently concealed until the required information has been recorded.

Where the Drawings are not of sufficient size, scale, or detail, the Contractor shall furnish his/her own drawings for incorporation of details and dimension. In such cases, the Contractor shall provide a reproducible set of his/her drawings, suitability cross referenced to the Contract Drawings.

The as-built drawings shall be maintained up to date at all times. Prior to any progress payments, the Engineer shall review the status of the as-built construction drawings. The Engineer shall withhold approval of progress payments until the as-built drawings are up to date.

Upon completion of the Contract, the Contractor shall furnish two satisfactory sets of as-built construction drawings. Drawings shall be certified that conditions shown are as-built. Final payment shall be withheld until the as-built construction drawings are received and accepted by the Engineer.

**** The building permit fees shall be paid by the City of Morgan Hill that is within the scope of work for this project. ****

**c.** Measurement and Payment: Full compensation for conforming to the provisions in this section "Project Records and Submittals" shall be considered as **included in the lump sum price** paid for the **Centennial Recreation Center Expansion Project** and no additional compensation will be allowed therefor.

## 2.01 MOBILIZATION

**a.** Description: Mobilization shall conform to the provisions in Section 11, "Mobilization," of the Standard Specifications.

**b.** Measurement and Payment: Full compensation for conforming to the provisions in this section "**Mobilization**" shall be considered as **included in the lump sum price** paid for the **Centennial Recreation Center Expansion Project** and no additional compensation will be allowed therefor.

## 2.02 CONSTRUCTION AREA SIGNS

**a.** Description: Construction area signs shall be furnished, installed, maintained, and removed when no longer required in conformance with the provisions in Section 12, "Construction Area Traffic Control Devices," of the Standard Specifications and these Technical Provisions.

Type II retroreflective sheeting shall not be used on construction area sign panels.

The Contractor shall notify the appropriate regional notification center for operators of subsurface installations at least 2 working days, but not more than 14 calendar days, prior to commencing excavation for construction area sign posts. The regional notification centers include, but are not limited to, the following:

| Notification Center | Telephone Number |
|---|---|
| Underground Service Alert-Northern California (USA) | 1-800-642-2444<br>1-800-227-2600 |
| Underground Service Alert-Southern California (USA) | 1-800-422-4133<br>1-800-227-2600 |

Excavations required to install construction area signs shall be performed by hand methods without the use of power equipment, except that power equipment may be used if it is determined there are no utility facilities in the area of the proposed post holes.

Sign substrates for stationary mounted construction area signs may be fabricated from fiberglass reinforced plastic as specified under "Prequalified and Tested Signing and Delineation Materials" of these technical provisions.

The Contractor may be required to cover certain signs during the progress of the work. Signs that are no longer required or that convey inaccurate information to the public shall be immediately covered or removed or the information shall be corrected. Covers for construction area signs shall be of sufficient size and density to completely block out the complete face of the signs. The retro-reflective face of the covered signs shall not be visible either during the day or at night. Covers shall be fastened securely so that the signs remain covered during inclement weather. Covers shall be replaced when they no longer cover the signs properly.

**b.** Measurement and Payment: Full compensation for construction area signs, including furnishing all labor, materials (including signs), tools, equipment, and incidentals, and for doing all the work involved in placing, removing, storing, maintaining, moving to new locations, replacing, and disposing of the components of the construction area si**gns shown on the plans,** shall be considered as **included in the lump sum price** paid for the **Centennial Recreation Center Expansion Project**, and no separate payment will be made therefor.

## 3.01 POTHOLING

**a.** Description: The Contractor shall pothole to locate crossing utilities at the locations directed by the Engineer prior to excavating to install the water or sewer mains. The contractor shall submit a report to the Engineer documenting the location, depth, size and material of the utilities found. A minimum size of 2' x 2' is required for each pothole and up to a maximum depth of 10 feet. **** Include 5 potholes for the Centennial Recreation Center Expansion Project as part of the bid proposal ****

**b.** Measurement and Payment: **Potholing** shall include full compensation for all labor, materials, tools, equipment and incidentals, and for doing all the work involved in Potholing, including all traffic control, flagging and temporary backfilling or steel plating, complete in place, as shown in the plans, as specified in the technical provisions and as directed by the Engineer and shall be considered as **included in the lump sum price** paid for the **Centennial Recreation Center Expansion Project** and no additional compensation will be allowed therefore.

## 3.02 SUPPLEMENTAL WORK

a. Description: The work shall include any new or unforeseen work not specified for on the plans and specification. The lump sum dollar amount listed in the bid schedule for Supplemental Work **shall be included as per the bid schedule.** Supplemental work shall be performed only upon direct written authorization from the Project Engineer. Agreed price may be used as an alternate method of payment, if directed by the Project Engineer.

# Appendix

# CITY OF MORGAN HILL

# Centennial Recreation Center Expansion Project

171 W Edmundson Ave.
Morgan Hill, CA 95037

## Project Manual

ARCHITECT

Weston Miles Architects, Inc.
17500 Depot Street, Suite #120
Morgan Hill, CA 95037
Phone: (408) 779-6686
Fax: (408) 778-9417

Project Manual #: 1 of 1
June, 2019

# TABLE OF CONTENTS

**DIVISION 01 - GENERAL REQUIREMENTS**
SECTION 011000 - SUMMARY OF WORK
SECTION 012100 - PROJECT CONTROL SYSTEM
SECTION 012200 - UNIT PRICES: MEASUREMENT AND PAYMENT
SECTION 012600 - MODIFICATION PROCEDURES
SECTION 012613 - REQUESTS FOR INFORMATION
SECTION 013113 - PROJECT COORDINATION
SECTION 013119 - PROJECT MEETINGS
SECTION 013200 - CONSTRUCTION PROGRESS DOCUMENTATION: SCHEDULES & REPORTS
SECTION 013300 - SUBMITTAL PROCEDURES
SECTION 015639 - TEMPORARY TREE AND PLANT PROTECTION
SECTION 017400 - CONSTRUCTION CLEANING AND WASTE MANAGEMENT
SECTION 017700 - CONTRACT CLOSEOUT PROCEDURES
SECTION 018119 - CONSTRUCTION INDOOR AIR QUALITY MANAGEMENT

**DIVISION 02 - EXISTING CONDITIONS**
SECTION 024119 - SELECTIVE STRUCTURE DEMOLITION

**DIVISION 03 – CONCRETE**
SECTION 033600 - SPECIAL CONCRETE FLOOR FINISHES
SECTION 033923 – MEMBRANE CONCRETE CURING
*SEE STRUCTURAL DRAWINGS*

**DIVISION 05 – METALS**
*SEE STRUCTURAL DRAWINGS*

**DIVISION 06 - WOOD, PLASTICS, AND COMPOSITES**
SECTION 062000 - FINISH CARPENTRY

**DIVISION 07 - THERMAL AND MOISTURE PROTECTION**
SECTION 071000 - CONCRETE WATERPROOFING
SECTION 072116 - BLANKET INSULATION
SECTION 072200 - ROOF AND DECK INSULATION
SECTION 072616 - BELOW-GRADE VAPOR BARRIER
SECTION 075100 - THERMOPLASTIC POLYOLEFIN (TPO) MEMBRANE ROOFING
SECTION 076000 - FLASHING AND SHEET METAL
SECTION 076113 - STANDING SEAM METAL ROOFING SYSTEM
SECTION 079000 - SEALANTS AND CAULKING

**DIVISION 08 - OPENINGS**
SECTION 081116 - ALUMINUM INTERIOR DOOR & FRAME SYSTEM
SECTION 081400 - WOOD DOORS
SECTION 084113 - ALUMINUM-FRAMED ENTRANCES AND STOREFRONTS
SECTION 085169 - GATE HARDWARE
SECTION 087100 - DOOR HARDWARE
SECTION 088100 - GLASS AND GLAZING
SECTION 088330 - MIRRORS

**DIVISION 09 - FINISHES**
SECTION 092236 - LATH
SECTION 092423 - PORTLAND CEMENT STUCCO
SECTION 092900 - GYPSUM BOARD
SECTION 095113 - ACOUSTICAL WALL PANELS
SECTION 096420 - WOOD GYMNASIUM FLOORING
SECTION 096810 - RUBBER BASE
SECTION 096811 - VENTED COVE BASE
SECTION 099100 - PAINTING

**DIVISION 10 - SPECIALTIES**
SECTION 101400 - SIGNAGE
SECTION 102600 - WALL AND CORNER PROTECTION
SECTION 104413 - FIRE EXTINGUISHER CABINETS
SECTION 104416 - FIRE EXTINGUISHERS

**DIVISION 22 - PLUMBING**
*SEE PLUMBING DRAWINGS*

**DIVISION 23 - HEATING, VENTILATING, AND AIR CONDITIONING**
*SEE MECHANICAL DRAWINGS*

**DIVISION 26 - ELECTRICAL**
SECTION 260500 - GENERAL ELECTRICAL REQUIREMENTS
SECTION 260519 - LINE VOLTAGE WIRE AND CABLE
SECTION 260526 - GROUNDING
SECTION 260533 - OUTLET, JUNCTION AND PULL BOXES
SECTION 260542 - CONDUITS, RACEWAYS AND FITTINGS
SECTION 260543 - UNDERGROUND DUCTS
SECTION 260544 - IN GRADE PULL BOXES
SECTION 262416 - PANELBOARDS AND DISTRIBUTION PANELS
SECTION 262726 - DEVICES WIRING
SECTION 262816 - CIRCUIT BREAKERS
SECTION 265100 - LIGHTING

**DIVISION 27 - COMMUNICATIONS**
SECTION 271000 - STRUCTURED CABLING

**DIVISION 31 – EARTHWORK**
SECTION 311000 - SITE CLEARING
SECTION 312213 - ROUGH GRADING
SECTION 312316 - EXCAVATION
SECTION 312317 - TRENCHING
SECTION 312333 - BACKFILL

**DIVISION 32 - EXTERIOR IMPROVEMENTS**
SECTION 321123 - AGGREGATE BASE COURSE
SECTION 321216 - ASPHALT PAVING
SECTION 321313 - CONCRETE PAVING
SECTION 321723 - PAVEMENT MARKINGS

SECTION 321713.23 - RUBBER PARKING BUMPERS
SECTION 321726 - TACTILE WARNING SURFACE
SECTION 328000 - IRRIGATION
SECTION 329000 - PLANTING: LANDSCAPE WORK

**DIVISION 33 - UTILITIES**
SECTION 331000 - WATER UTILITIES
SECTION 334000 - STORM DRAINAGE

**END OF SECTION**

# Division 01:
# General Requirements

# SECTION 011000 - SUMMARY OF WORK

## 1.0 GENERAL

### 1.1 SUMMARY

A. This Section includes all labor, materials, equipment, operations, or methods listed, mentioned or scheduled on the plans and/or herein specified, including all incidentals necessary and required for completion of work under this Section.

B. This Section includes summary of work including:

1. Work covered by Contract Documents including but not limited to:

    a. Expansion to the existing Centennial Recreation Center including concrete slab and foundation, structural wood and steel framing, standing seam metal roof, storefront windows, wood and metal doors, suspended metal ceiling and gypsum board ceilings, exterior cement plaster, interior finishes including resilient & wood sports flooring, stained/sealed concrete, mechanical system, lighting, connection to existing utilities

    b. Construction of site work to accommodate for the expansion at new entry and parking areas including grading, concrete paving, asphalt paving, parking striping and signage, site lighting, irrigation and landscape planting.

2. Bid items, Allowances and Alternates.

    a. The Base bid includes the following: Construction of Hallway #100F, Storage #128A, Aerobics # 128 and all site work.

3. Work under other contracts.

    a. N/A:

        i. N/A

4. Work sequence.

    a. During the construction of the Project the Centennial Recreation Center will remain open to the public during construction.

5. Temporary Facilities

a. The contractor is responsible for ensuring accessibility compliance throughout construction.

6. Cooperation of contractor and coordination with other work.

7. Maintenance.

8. Occupancy requirements.

9. Reference Standards.

10. Products ordered in advance.

11. Furnished products.

1.2 RELATED SECTIONS

A. Documents affecting work of this Section include, but are not necessarily limited to, General Conditions, Special Conditions and Division 1 of these Contract Documents.

1.3 WORK COVERED BY CONTRACT DOCUMENTS

A. Unless provided otherwise in the Contract Documents, all risk of loss to Work covered by Contract Documents shall rest with Contractor until Final Completion and Acceptance of the Work.

1.4 BID ITEMS

A. Any bid item may be deleted in total or in part prior to or after award of Contract without compensation in any form or adjustment of other bid items or prices therefore.

1. Contractor must coordinate related work and modify surrounding work as required to complete Work, including changes under each Alternate designated in the contract documents.

1.5 WORK SEQUENCE

A. Construct work in stages and at times to accommodate Centennial Recreation Center operation requirements during the construction period.

1. Set up contractor staging area (See 4.0 contractor staging area)

2. All new materials with application odors like, hot mopping, to be accomplished when students are not present, i.e. holidays or Saturdays.

1.6 COOPERATION OF CONTRACTOR AND COORDINATION WITH OTHER WORK

A. Should construction work, or work of any other nature, be under way by other forces or by other contractors within or adjacent to the limits of the Work, the Contractor shall cooperate with all such other contractors or forces to the end that any delay or hindrance to their work will be avoided. The cost of such cooperation will be considered as included in the bid amount and no direct or additional payment will be made therefore.

B. The City of Morgan Hill reserves the right to perform other or additional work, within or adjacent to the limits of the work specified, at any time by the use of other forces. The Contractor shall coordinate with the City of Morgan Hill and any forces, or other forces, engaged by the City of Morgan Hill, as required by the Contract General Conditions. In the event that the performance of such other or additional work materially increases or decreases the Contractor's costs, the work and the amount to be paid therefore will be appropriately adjusted as determined by the Architect.

C. Limit use of premises for Work and for construction operations to allow for:

1. Operation.

2. Work by other contractors and tenants.

D. Coordinate use of premises and access to site with other contractors, utilities, tenants, and forces, as required by the Contract General Conditions. Architect has final authority over coordination, use of premises, and access to site.

E. Cooperate with staff and the public and others who may occupy the building prior to completion of Work of this Contract.

F. Cooperate with contractors for other area work, not included in Contract, but which may take place during construction period

1.7 MAINTENANCE

A. Cost of maintenance of systems and equipment prior to Final Acceptance will be considered as included in prices bid and no direct or additional payment will be made therefore.

1.8 OCCUPANCY REQUIREMENTS

A. Whenever, in the opinion of Architect, Work or any part thereof is in a condition suitable for use, and the best interest of requires such use, may take beneficial occupancy of and connect to, open for public use, or use the Work or such part thereof. In such case, will request Architect to inspect the Work or part thereof, and issue a Certificate of Substantial Completion for that part of Work.

B. Prior to date of Final Acceptance of the Work by all necessary repairs or renewals in Work or part thereof so used, not due to ordinary wear and tear, but due to defective materials or workmanship or to operations of Contractor, shall be made at expense of Contractor.

C. Use of Work or part thereof as contemplated by this Section shall in no case be construed as constituting acceptance of Work or any part thereof. Such use shall neither relieve Contractor of any responsibilities under Contract, nor act as waiver by of any of the conditions thereof.

**2.0 PRODUCTS**

2.1 REFERENCE STANDARDS

A. For products specified by association or trade standards, comply with requirements of standard, except where more rigid requirements are specified or are required by applicable codes.

**3.0 EXECUTION**

A. Not applicable to this Section.

**END OF SECTION**

# SECTION 012100 – PROJECT CONTROL SYSTEM

## 1.0 GENERAL

### 1.1 WEB DATABASE

A. The City of Morgan Hill will use and maintain a web-based database as the primary means of communication related to the Project's correspondence, submittals, requests for information (RFIs), advisory notices, and non-compliance issues. Correspondence from the Contractor shall be sent to the Construction Manager via the PROCORE System.

B. The Construction Manager and Contractor shall utilize PROCORE's system for electronic submittal of all data and documents (unless specified otherwise by the Construction Manager) throughout the duration of the Contract. PROCORE is a web-based electronic media site that is hosted by PROCORE LLC utilizing their PROCORE web solution. PROCORE will be made available to the Contractor's project personnel. The joint use of this system is to facilitate electronic exchange of information, automation of key processes, and overall management of the Contract. PROCORE shall be the primary means of project information submission and management. When required by the Construction Manager, paper documents will also be required. In the event of discrepancy between the electronic version and paper documents, the paper documents will govern. PROCORE is a registered trademarks of PROCORE LLC.

### 1.2 USER ACCESS LIMITATIONS

A. The Construction Manager will control the Contractor's access to PROCORE by allowing access and assigning user profiles to accepted Contractor personnel. User profiles will define levels of access into the system, determine assigned function-based authorizations (determines what can be seen) and user privileges (determines what they can do).

### 1.3 AUTOMATED SYSTEM NOTIFICATION AND AUDIT LOG TRACKING

A. Review comments made (or lack thereof) by the Construction Manager and Design Consultant on Contractor submitted documentation shall not relieve the Contractor from compliance with requirements of the Contract Documents. The Contractor is responsible for managing, tracking, and documenting the Work to comply with the requirements of the Contract Documents. Neither automated system notifications nor audit logs constitute validation of the Contractor's submitted information.

### 1.4 CONTRACTOR RESPONSIBILITY

A. The Contractor shall be responsible for the validity of their information placed in PROCORE and for the abilities of their personnel. Accepted users shall be knowledgeable in the use of computers, including Internet Browsers, email programs, CAD drawing applications, and Adobe Portable Document Format (PDF) document

distribution program. Adobe PDF documents shall be created through electronic conversion rather than optically scanned whenever possible. The Contractor is responsible for the training of their personnel in the use of PROCORE (outside what is provided by the Construction Manager) and the other programs indicated above as needed.

B. User Access Administration:

1. Provide a list of Contractor's key PROCORE personnel for the Construction Manager's acceptance. The Construction Manager is responsible for adding and removing users from the system. The Construction Manager reserves the right to perform a security check on all potential users.

1.5 CONNECTIVITY PROBLEMS

A. PROCORE is a web-based environment and therefore subject to the inherent speed and connectivity problems of the Internet. The Contractor is responsible for its own connectivity to the Internet. PROCORE response time is dependent on the Contractor's equipment, including processor speed, Internet access speed, etc. and current traffic on the Internet. The City of Morgan Hill and Construction Manager will not be liable for any delays associated from the usage of PROCORE including, but not limited to: slow response time, down time periods, connectivity problems, or loss of information. The Contractor will ensure that connectivity to the PROCORE system (whether at the home office or job site) is accomplished through some form of high-speed communications with 1 Mbps as the minimum bandwidth requirements for using the system. It is recommended a faster connection be used when uploading pictures and files into the system. Under no circumstances shall the usage of PROCORE be grounds for a time extension or cost adjustment to the Contract. If there are problems that persist with the PROCORE site for more than 24 consecutive hours that prevent the electronic submission of data by the Contractor, the Contractor may submit documents in paper form to the Construction Manager until such time that the Construction Manager notifies the Contractor that the PROCORE site is operable and available for use.

1.6 TRAINING

A. The City of Morgan Hill has arranged for the following training to be provided to the Contractor. The Construction Manager will provide a one hour training class to the Contractor within ten (10) days of NTP at a time mutually agreeable to Contractor and Construction Manager. Thereafter the Construction Manager will provide up to one hour of additional training via telephone during the project per month of the project life.

**2.0 EQUIPMENT**

A. In order to process correspondence, submittals, and RFIs, the Contractor must provide and have in place for its own use the required basic components outlined below:

2.1 HARDWARE

A. A computer with internet access and sufficient capabilities to perform all duties stated in Section 012100; a scanner at least large enough to scan 11” x 17” sheets with sufficient resolution to maintain clarity and legibility of the document at its native size; and a color printer of sufficient size and capacity to accept incoming correspondence as described in this section.

2.2 SOFTWARE

A. Adobe Acrobat 9 Standard; Microsoft Office 2010 or higher, including but not limited to Microsoft Word and Microsoft Excel.

B. PROCORE currently supports Mozilla's Firefox v15.0.1 and newer, Google Chrome v22.01229.79 m and newer, Apple's Safari v6 and newer, and Microsoft's Internet Explorer v8 and v9 and newer web browsers for accessing the application. Certain functions may not be available when using any program other than the newest version of the respective web browser.

2.3 FACILITIES

A. The Contractor shall make its own arrangements to provide high-speed (minimum speed: download 1Mbps/upload 1Mbps) internet connection for its own use as soon as practicable.

**3.0 EXECUTION**

A. Items to be uploaded to PROCORE by the Construction Manager include but are not limited to: RFI responses, Submittal comments, Clarification letters, Design Clarifications, Field Orders, Potential Change Orders, and System Outage Requests et al. These items will be attached in PDF file format. These attachments may include files that need to be viewed and/or printed in color. Formal letters, stop notices, Field Orders, Progress Payment Requests, and Contract Change Orders shall always include a wet-signed hard copy.

3.1 PROCORE UTILIZATION

A. All project related correspondence (RFIs, submittals, etc.) originated by the Contractor or Subcontractor, Supplier, et al. shall be directed to the Architect and the Construction Manager, unless otherwise indicated in the Specifications.

B. Submittals

1. The use of the electronic communication does not waive the requirement for the provision of hard copies of all formal correspondence and, submittals. The hard copies of all documents must match the electronic copies of all correspondence and submittals.

2. Submittals shall be in accordance with Section 013300. The provisions of Section 013300 shall apply both to electronic copies and hard copies of submittals, unless otherwise stated in writing by the Construction Manager.

3. In addition to above, PROCORE shall be utilized in connection with submittal preparation and information management required by but not limited to Sections:

   a. 00700 General Conditions

   b. 00800 Supplementary General Conditions

   c. 01000 Summary of Work

   d. 012200 Unit Prices: Measurement and Payment

   e. 012600 Modification Procedures

   f. 012613 Requests For Information

   g. 013113 Project Coordination

   h. 013119 Project Meetings

   i. 013200 Construction Progress Documents: Schedules & Reports

   j. 013300 Submittal Procedures

   k. 017700 Contract closeout Procedures

4. PROCORE will be utilized by all other Sections not listed above and as required by the Construction Manager.

3.2 TERMINATION OF USE

A. The City of Morgan Hill reserves the right to terminate the use of PROCORE for the electronic submission of data to the City of Morgan Hill. The City of Morgan Hill may provide an alternate project control system or require the use of paper documents submitted in accordance with the Contract Documents. The Contractor will be provided in writing ten (10) days' notice that the City of Morgan Hill intends to discontinue use of PROCORE.

3.3 ADOBE PDF

A. All information, comments, questions and statements shall be scanned and/or converted to the PDF file format and attached to the PROCORE system. Items to be sent via PROCORE system include but are not limited to large-format plan sheets (22" x 34" or larger), small-format plan sheets, pages within tabbed binders, RFIs, transmittal sheets, et al. The PDF attachments supplied to the Construction Manager

shall be in a sufficient resolution to be fully legible at its native size.

B. All separate files within a given piece of correspondence shall be combined into a single PDF document (i.e. An RFI that contains a text file and two photo files shall be combined into a single PDF document prior to delivery to the Construction Manager.)

3.4 LABELING FORMAT

A. The subject line of each email, and the file name of any attached files shall begin with the file labeling scheme:

RFI_XXXY_(Contractor Name)_(Subject)
Letter_XXXY_(Contractor Name)_(Subject)
Transmittal_XXXY_(Contractor Name)_(Subject)
PCO_XXXY_(Contractor Name)_(Subject)
Submittal_XXX.ZZY_(Contractor Name)_(Subject)

B. The first section of the label indicates the type of correspondence (i.e RFI). "XXX" indicates a unique number, sequentially assigned for the given piece of correspondence. "Y" is a sequential letter assigned for revised or resubmitted documents, i.e. A, B, or C being the 1st, 2nd, and 3rd revision or resubmittal, respectively. "(Contractor Name)" indicates to the database that the correspondence is from the Contractor. The Contractor will indicate the subject at the end of the numbering scheme. For submittals, "ZZ" indicates a unique number, sequentially assigned for each package item (see C. Submittals). Each piece of correspondence shall be sent in a separate email.

C. Submittals - If a submittal package has multiple items, each item shall be considered a separate piece of correspondence and sent separately. For example, if "Submittal 3: Concrete" had two items, "3.01: Mix Design," and "3.02: Curing Compound," two separate items would be emailed to the Construction Manager labeled as:
Submittal_003.01_(Contractor Name)_Mix Design
Submittal_003.02_(Contractor Name)_Curing Compound

3.5 ORIGINAL DOCUMENTS

A. Where possible, the Contractor will obtain the electronic document from its original source to maintain the integrity, legibility, and searchability of the document.

3.6 ORGANIZATION

A. The information included in the attachments shall be organized in a logical and thoughtful manner. Where the information originated in a tabbed format (a binder, for example), the scanned and/or converted PDF file shall be electronically bookmarked accordingly using the "bookmark" function of Adobe Acrobat 9 Standard.

3.7 PRINTING

A. Except where otherwise indicated, the Contractor will receive no hard copies of the above outlined correspondence. The Contractor will be required to print for its use, in color if necessary, any record copies, field copies, sub-contractor copies, etc., if such copies are desired.

3.8 PROJECT FORMS

A. The Contractor shall use its own correspondence forms for attachments uploaded to PROCORE. These forms shall include the identifying information specific to the PDF document succeeding the cover form. Additionally, the Contractor shall input all identifying information within PROCORE as requested when generating a new document within the system.

**END OF SECTION**

# SECTION 012200 - UNIT PRICES: MEASUREMENT AND PAYMENT

## 1.0 GENERAL

### 1.1 SUMMARY

A. This Section includes all labor, materials, equipment, operations, or methods listed, mentioned or scheduled on the plans and/or herein specified, including all incidentals necessary and required for completion of work under this Section.

B. This Section includes the description requirements and procedures for determining amount of work done and for obtaining payment for work done.

### 1.2 RELATED SECTIONS

A. Documents affecting work of this Section include, but are not necessarily limited to, General Conditions, Special Conditions and Division 1 of these Contract Documents.

B. Section 011000 - Summary of Work

C. Section 012600 - Modification Procedures

D. Section 013300 - Submittal Procedures

E. Section 013200 - Construction Progress Documentation – Schedule

F. Section 017700 - Contract Closeout Procedures

### 1.3 REFERENCES

A. Public Contract Code

### 1.4 SCOPE OF WORK

A. Work under Contract, or under any bid item, allowance or alternate, shall include all abetment, labor, materials, transport, handling, storage, supervision, administration and all other items necessary for the satisfactory completion of work, whether or not expressly specified or shown.

### 1.5 DETERMINATION OF QUANTITIES

A. Quantity of work to be paid for under any item for which a unit price is fixed in Contract shall be number, as determined by Architect, of units of work satisfactorily completed in accordance with Plans and Specifications and as

directed pursuant to Plans and Specifications. Unless otherwise provided, determination of number of units of work so completed will be based, so fares practicable, on actual measurement or count within prescribed or ordered limits, and no payment will be made for work done outside of limits. Measurements and computations will be made by methods as Architect may consider appropriate for class of work measured.

1.6 SCOPE OF PAYMENT

A. Except as otherwise expressly stipulated in Section 011000 Summary of Work, payment to Contractor at the unit price or other price fixed in the contract for performing the work required under any item, or (if the contract is on a lump sum price basis) at the lump sum price fixed in the contract for performing all work required under the contract, and as either may be adjusted pursuant to any approved change order, shall be full compensation for completing, in accordance with the Contract Documents, all work required under the item or under the contract, and for all expense incurred by Contractor for any purpose in connection with the performance and completion of said work, including all incidental work necessary for completion of the Work.

B. The Contract Sum, whether lump sum, unit price or otherwise, shall be deemed to include all costs necessary to complete required Work, shall also include any costs for loss or damage arising from nature of Work or, prosecution of the Work, or from action of elements. Unless the Contract Documents expressly provide otherwise, the Contract Sum shall be deemed to include:

1. Any and all costs arising from any unforeseen difficulties which may be encountered during, and all risks of any description connected with, prosecution of Work until acceptance by Morgan Hill Centennial Recreation Center Expansion;

2. All expenses incurred due to suspension, or discontinuance of Work as provided in Contract;

3. Escalation to allow for cost increases between time of Contract Award and completion of Work.

C. Whenever it is specified herein that Contractor is to do work or furnish materials of any class for which no price is fixed in the Contract, it shall be understood that Contractor is to do such work or furnish such materials without extra charge or allowance or direct payment of any sort, and that cost of doing work or furnishing materials is to be included in price bid, unless it is expressly specified herein, in particular cases, that work or material is to be paid for as extra work.

D. No payment shall be made for materials or equipment not yet incorporated into the Work, except as follows:

NONE.

E. For the above listed materials and equipment, where Contractor requests payment on the basis of such materials and equipment not incorporated in the Work, Contractor must satisfy the following conditions:

1. The materials and/or equipment shall be delivered and suitably stored at the site or at another location agreed to in writing, for example, a mutually acceptable warehouse;

2. Full title to the materials and/or equipment shall vest in Morgan Hill Centennial Recreation Center Expansion at the time of deliver to the site, warehouse or other storage location;

3. Contractor shall obtain a negotiable warehouse receipt, endorsed over to the City of Morgan Hill for materials and/or equipment stored in an off-site warehouse. No payment shall be made until such endorsed receipts are delivered to Architect;

4. Stockpiled materials and/or equipment shall be available for the City of Morgan Hill inspection. Materials and/or equipment shall be segregated and labeled or tagged to specifically identify this specific Contract;

5. After delivery of materials and/or equipment, if any inherent or acquired defects are discovered, defective materials and/or equipment shall be removed and replaced with suitable materials and/or equipment at Contractor's expense;

6. At its expense, Contractor shall insure the materials and/or equipment against theft, fire, vandalism, and malicious mischief, as well as any other coverages required under the Contract Documents;

7. Contractor's application for payment shall be accompanied by a bill of sale, invoice or other documentation warranting that the City of Morgan Hill has received the materials and equipment free and clear of all liens and evidence that the materials and equipment are covered by appropriate property insurance and other arrangements to protect the City of Morgan Hill’s interest therein, all of which must be satisfactory to the City of Morgan Hill.

## 1.7 BASIS OF PAYMENT

A. Unit Pay Quantities: When estimated quantity for specific portions of Work is listed in Bid Form, quantity of work to be paid for shall be actual number of units satisfactorily completed in accordance with Plans and Specifications.

B. Lump Sum: When estimated quantity for specific portion of Work is not indicated and unit is designated as Lump Sum, payment will be on a Lump Sum basis for Work satisfactorily completed in accordance with Plans and Specifications.

C. Allowances: Allowance items will be paid for as provided in Section 011000 Summary of Work. Funds authorized for Allowance work will not be released for contract payments unless additional work has been authorized in writing by the City of Morgan Hill.

D. Payment for all work included in Contract Documents shall be included in lump sum or unit price or prices bid, and no direct or additional payments will be made for any incidental work.

E. The City of Morgan Hill does not expressly, or by implication, agree, warrant, or represent in any manner, that actual amount of Work will correspond with amount shown or estimated and reserves right to increase or decrease amount of any class or portion of Work, to leave out entire Bid Item or Items, or to add work not included in Bid, when in its judgment such change is in best interest of the City of Morgan Hill. No change in Work shall be considered waiver of any other condition of Contract. No claim shall be made for anticipated profit, for loss of profit, for damages, or for extra payment whatever, except as otherwise expressly provided for in Contract Documents, because of any differences between amount of work actually done and estimated amount as set forth herein, or for elimination of extra Bid Items.

1.8 PROGRESS PAYMENTS

A. Progress payments will be made monthly.

B. Schedule of Values:

1. Within thirty (30) calendar days from issuance of Notice of Award and prior to the Contractor's application for the first progress payment, the Contractor shall submit a detailed breakdown of its bid by scheduled Work items and/or activities, including coordination responsibilities and project record document responsibilities. The Contractor shall furnish such breakdown, of the total Contract Sum, by assigning dollar values (cost estimates) to each applicable Progress Schedule network activity, which cumulative sum equals the total Contract Sum. The format and detail of the breakdown shall be as directed by the Architect to facilitate and clarify future progress payments to

Contractor for direct Contact Work. This breakdown shall be referred to as the Schedule of Values.

2. The Contractor's overhead, profit, insurance, cost of bonds and/or other financing, as well as "general conditions costs," (for example, site cleanup and maintenance, temporary roads and access, off site access roads, temporary power and lighting, security and the like), shall be prorated through all activities so that the sum of all the Schedule of Values line items equal the Contractor's total Contract Sum, less any allowances designated by the Architect.

3. The Architect will review the breakdown in conjunction with the Progress Schedule to ensure that the dollar amounts of this Schedule of Values are, in fact, fair market cost allocations for the Work items listed. Upon favorable review by the Architect, this Schedule of Values will be accepted for use by the Architect. The City of Morgan Hill and the Architect shall be the sole judges of fair market cost allocations.

4. Any attempt to increase the cost of early activities, that is, "front loading," will be rejected by the City of Morgan Hill, resulting in a complete reallocation of monies until such "front loading" is corrected. Repeated attempts at "front loading" may result in suspension or termination of the Work or refusal to process progress payments, until such time as the Schedule of Values is acceptable to the City of Morgan Hill.

C. Payment Requests:

1. On or before the 25th day of each month, the Contractor shall submit to the Architect a request for payment for the cost of the Work put in place during the period from the [1st] day of the previous month to the [30th] day of the previous month. Such requests for progress payments shall be based upon Schedule of Values prices of all labor and materials incorporated in the Work up until midnight of the last day of that one month period, less the aggregate of previous payments. If Contractor is late submitting its payment request, that payment request may be processed at any time during the succeeding one month period, resulting in processing of Contractor's payment request being delayed for more than a day for day basis.

2. Payment requests may include, but are not necessarily limited to the following:

a. Material, equipment and labor incorporated into the Work, less any previous payments for the same;

b. Up to seventy-five percent (75%) of the cost of major equipment identified in paragraph 1.05.D above, if purchased and delivered to the site or stored off site, as may be approved by the Architect.

c. Up to fifty percent (50%) of the cost of materials identified in paragraph 1.05.D above specifically fabricated for the Project that are not yet incorporated into the Work.

3. Contractor shall, at the time any payment request is submitted, certify in writing the accuracy of the payment request and that Contractor has fulfilled all scheduling requirements of the Contract General Conditions (refer to AIA Document A201-1997, included in Part A of this book) and Section 013200, Construction Progress Documentation -Schedules and Reports, including updates and revisions. The certification shall be executed by a responsible officer of the Contractor.

4. No progress payment will be processed prior to Architect receiving all requested, acceptable schedule update information.

5. Each payment request shall list each Change Order executed prior to date of submission, including the Change Order Number, and a description of the work activities, consistent with the descriptions of original work activities. Contractor shall submit a monthly Change Order status log to Architect.

6. If Architect requires substantiating data, Contractor shall submit information requested by Architect, with cover letter identifying Project, payment request number and date, and detailed list of enclosures. Contractor shall submit one copy of substantiating data and cover letter for each copy Payment request submitted.

7. Monthly progress payments shall be made, based on total value of activities completed or partially completed, as determined by the City of Morgan Hill with participation of Contractor, and based upon approved activity costs. Accumulated retainage will be shown as separate item in payment summary. If Contractor fails or refuses to participate in construction progress evaluation with the City of Morgan Hill, Contractor shall not receive current payment until Contractor has participated fully in providing construction progress information and schedule update information for the City of Morgan Hill.

8. No progress payment will be processed prior to Architect receiving all requested, acceptable prevailing wage and certified payroll information.

D. Progress Payments:

1. Upon receiving Contractor's payment request, Architect will review the payment request and make necessary adjustments to percent of completion of each activity. One copy will be returned to Contractor with description of adjustments made. All parties will update percentage of completion values in the same manner, that is, express value of an accumulated percentage of completion to date.

2. The payment request may be reviewed by Architect, Architect/Engineer and/or inspectors, for the purpose of determining that the payment request is a proper payment request, and shall be rejected, revised or approved by the Architect pursuant to the cost breakdown prepared in accordance with Section 1.7B of this Section.

3. If it is determined that the payment request is not a proper payment request suitable for payment, Architect shall return it to the Contractor as soon as practicable, but no later than seven (7) days after receipt, together with a document setting forth in writing the reasons why the payment request is not proper.

4. Pursuant to Public Contract Code Section 20104.50, if the City of Morgan Hill fails to make any progress payment within thirty (30) days after receipt of an undisputed and properly submitted payment request from a contractor, the City of Morgan Hill shall pay interest to the Contractor equivalent to the legal rates set forth in subdivision (a) of Section 685.010 of the Code of Civil Procedure. The thirty (30) day period shall be reduced by the number of days by which the City of Morgan Hill exceeds the seven (7) day return requirement set forth herein.

5. As soon as practicable after approval of each request for progress payment, the City of Morgan Hill will pay to Contractor in manner provided by law, an amount equal to ninety percent (90%) of Architect's estimate, or a lesser amount if so provided in Contract Documents, provided that payments may at any time be withheld if, in judgment of Architect, Work is not proceeding in accordance with Contract, or Contractor is not complying with requirements of Contract.

6. Before any progress payment or final payment is made, the Contractor may be required to submit satisfactory evidence that Contractor is not delinquent in payments to employees subcontractors, suppliers, or creditors for labor and materials incorporated into Work.

7. The City of Morgan Hill reserves and shall have the right to withhold payment for any equipment and/or specifically fabricated materials that, in the sole judgment of the Architect, is not adequately and properly protected against weather and/or damage, prior to or following incorporation into the Work.

8. Granting of progress payment or payments by the City of Morgan Hill or receipt thereof by Contractor, shall not be understood as constituting in any sense acceptance of Work or of any portion thereof, and shall in no way lessen liability of Contractor to replace unsatisfactory work or material, though unsatisfactory character of work or material may have been apparent or detected at time payment was made.

9. When the City of Morgan Hill shall charge sum of money against Contractor under any provision of Contract, amount of charge shall be deducted and retained by the City of Morgan Hill from amount of next succeeding progress payment or from any other monies due or that may become due Contractor under Contract. If, on completion or termination of Contract, such monies due Contractor are found insufficient to cover the City of Morgan Hill charges against him, the City of Morgan Hill shall have right to recover balance from Contractor or Sureties.

## 1.9 RETENTION

A. Pursuant to provisions of Public Contract Code Section 22300, substitution of securities for any monies withheld under Contract to insure performance is permitted under following conditions:

1. At request and expense of Contractor, securities listed in Section 16430 of the Government Code, bank or savings and loan certificates of deposit, interest bearing demand deposit accounts, standby letters of credit, or any other security mutually agreed to by Contractor and the City of Morgan Hill which are equivalent to the amount withheld under retention provisions of Contract shall be deposited with Controller or with a state or federally chartered bank in California, as the escrow agent, who shall then pay such monies to Contractor. Upon satisfactory completion of Contract, securities shall be returned to Contractor.

2. Alternatively, Contractor may request and the City of Morgan Hill shall make payment of retentions earned directly to the escrow agent at the expense of the Contractor. At the expense of the Contractor, the Contractor may direct the investment of the payments into securities and the Contractor shall receive the interest earned on the investments

upon the same terms provided for in this Section for securities deposited by the Contractor. Upon satisfactory completion of the Contract, the Contractor shall receive from escrow agent all securities, interest, and payments received by the escrow agent from the City of Morgan Hill, pursuant to the terms of this Section. The Contractor shall pay to each subcontractor, not later than twenty (20) days after receipt of the payment, the respective amount of interest earned, net of costs attributed to retention withheld from each subcontractor, on the amount of retention withheld to insure the performance of the Contractor.

3. Contractor shall be beneficial owner of securities substituted for monies withheld and shall receive any interest thereon.

4. Contractor shall enter into escrow agreement with Controller as authorized under Public Contract Code Section 22300, specifying amount of securities to be deposited, terms and conditions of conversion to cash in case of default of Contractor, and termination of escrow upon completion of Contract.

## 1.10 FINAL PAYMENT

A. As soon as practicable after all required Work is completed in accordance with Contract, including Contractor maintenance after Final Acceptance, the City of Morgan Hill will pay to Contractor, in manner provided by law, unpaid balance of contract price of Work, or whole contract price of Work if no progress payment has been made, determined in accordance with terms of Contract, less sums as may be lawfully retained under any provisions of Contract or by law.

B. Prior progress payments shall be subject to correction in the final payment. Architect's determination of amount due as final payment shall be final and conclusive evidence of amount of Work performed by Contractor under Contract, and shall be full measure of compensation to be received by Contractor.

C. Contractor and each assignee under an assignment in effect at time of final payment, and as a condition precedent to final payment, shall release the City of Morgan Hill, its officers, agents, employees, Architect and all consultants from liabilities, obligations, and claims arising under Contract.

## 1.11 EFFECT OF PAYMENT

A. Payment will be made by the City of Morgan Hill, based on the Architect's observations at the site and the data comprising the Application for Payment. Payment will not be a representation that the Architect has:

1. Made exhaustive or continuous on-site inspections to check the quality or quantity of Work;

2. Reviewed construction means, methods, techniques, sequences or procedures;

3. Reviewed copies of requisitions received from subcontractors and material suppliers and other data requested by the City of Morgan Hill to substantiate Contractor's right to payment; or

4. Made examination to ascertain how or for what purpose Contractor has used money previously paid on account of the Contract Sum.

## 2.0 PRODUCTS

A. Not applicable to this Section.

## 3.0 EXECUTION

A. Not applicable to this Section.

**END OF SECTION**

# SECTION 012600 - MODIFICATION PROCEDURES

## 1.0 GENERAL

### 1.1 SUMMARY

A. This Section includes all labor, materials, equipment, operations, or methods listed, mentioned or scheduled on the plans and/or herein specified, including all incidentals necessary and required for completion of work under this Section.

B. This Section includes the description of general procedural requirements for alterations, modifications and extras.

### 1.2 RELATED SECTIONS

A. Documents affecting work of this Section include, but are not necessarily limited to, General Conditions, Special Conditions and Division 1 of these Contract Documents.

B. Section 011000 - Summary of Work

C. Section 012100 - Project Control System

D. Section 012200 - Unit Prices: Measurement and Payment

E. Section 012613 - Requests for Information

### 1.3 GENERAL

A. Any change in scope of work or deviation from Drawings or Specifications shall be accomplished only when authorized in writing by Architect.

B. Changes in scope of Work or deviation from Drawings or Specifications may be initiated only by the Contractor or the Architect.

1. Contractor may initiate changes by submitting Requests for Information (RFI), Notice of Concealed or Unknown Conditions, or Notice of Hazardous Waste Conditions.

    a. RFIs shall be submitted to seek clarification of Contract Documents.

2. Contractor shall be responsible for its costs to implement and administer RFIs throughout the Contract duration. Regardless of the number of RFIs submitted, Contractor will not be entitled to additional compensation. Contractor shall be responsible for both the City of

Morgan Hill's Architect's administrative costs for answering its RFIs where the answer could reasonably be found by reviewing the Contract Documents, as determined by Architect; such costs will be deducted from progress payments.

3. Architect may initiate changes by issuing a Supplemental Instruction.

4. Architect may initiate changes by issuing Requests For Proposal (RFP) to Contractor. Such RFPs will detail all proposed changes in the Work and request a quotation of changes in Contract Sum and Contract Times from Contractor.

1.4 PROCEDURE

A. Contractor shall submit RFI to Architect. Architect shall respond by issuing a Clarification.

1. If Contractor is satisfied with the Clarification and does not request change in Contract Sum or Contract Times, then the Clarification shall be executed without a change.

2. If Contractor believes that the Clarification results in change in Contract Sum or Contract Times, Contractor shall notify Architect who may then deny request for change or issue RFP.

B. Contractor shall submit Notices of Concealed or Unknown Conditions to resolve unanticipated conditions incurred in the execution of the Work. If Architect determines that a change in Contract Sum or contract Times is justified, Architect shall issue RFP. Architect shall issue Supplemental Instruction to Contractor. Contractor shall not proceed with Supplemental Instruction until Architect approves it in writing.

1. If Contractor is satisfied with Supplemental Instruction and does not request change in Contract Sum or Contract Times, then Supplemental Instruction shall be executed without a Change Order.

2. If Contractor believes that Supplemental Instruction results in change in Contract Sum or Contract Times, Contractor shall notify Architect. Architect may then deny request for change, cancel Clarification or issue RFP.

C. Responses by recipients shall be within a reasonable time.

D. Contractor shall respond to Architect's RFP within fifteen (15) working days by furnishing a complete breakdown of costs of both credits and extras;

itemizing materials, labor, taxes, overhead and profit. Subcontract work shall be so indicated.

E. Upon approval of RFP, Architect will issue a Change Order directing Contractor to proceed with extra work.

F. Payment shall be made as follows:

1. Change Orders which increase Contract Sum or Contract Times shall be included in next Contract Modification Form, signed by Architect, accepted by Contractor.

2. Payment shall be made for Change Order work along with other work in progress payment following completion of Change Order work. Partial completion of Change Order work shall be paid for that part completed during the period covered by the monthly payment request.

1.5 COST DETERMINATION

A. Total cost of extra work shall be the sum of labor costs, material costs, equipment rental costs and specialist costs as defined herein plus overhead and profit as allowed herein. This limit applies in all cases of claims for extra work, whether calculating Change Orders, RFPs, or calculating claims of all types, and applies even in the event of fault, negligence, strict liability, or tort claims of all kinds, including misrepresentation, concealment, strict liability or negligence. No other costs arising out of or connected with the performance of extra work, of any nature, may be recovered by Contractor. No special, incidental or consequential damages may be claimed or recovered against the City of Morgan Hill, its representatives or agents, whether arising from breach of contract, negligence or strict liability, unless specifically authorized in the Contract Documents.

B. Overhead and Profit:

1. Overhead shall be as defined in Article 1.8, below.

2. Overhead and profit on labor for extra work shall be 15 percent (15%).

3. Overhead and profit on materials for extra work shall be 15 percent (15%).

4. Overhead and profit on equipment rental for extra work shall be 15 percent (15%).

5. When extra work is performed by a first tier subcontractor, Contractor shall receive a 10 percent (10%) markup on subcontractors' total costs of extra work.

6. When extra work is performed by a lower tier subcontractor, Contractor shall receive a 10 percent (10%) markup on the lower tier subcontractors' total costs of extra work. Contractor and first tier subcontractors shall divide the markup as mutually agreed.

7. Credit for overhead and profit on deleted work shall be 5% for the Contractor actually performing the work plus applicable reductions insurance and bond cost.

C. Taxes:

1. Santa Clara County Sales Tax should be included.

2. Federal and Excise Tax shall not be included.

CI. City-Operated Equipment: When City-operated equipment is used to perform extra work, Contractor will be paid for equipment and operator as follows:

1. Payment for equipment will be made in accordance with Paragraph 1.5D, below.

2. Payment for cost of labor will be made at no more than rates of such labor established by State of California Department of Industrial Relations schedule of Prevailing Wages at the time such work was performed, whether or not the labor was actually covered by such an agreement.

1.6 COST BREAKDOWN

A. Contractor to submit complete breakdown cost proposal identifying labor hours x rate, material quantity x unit price, equipment rental hours x rate and subcontract cost proposals. Markups shall be shown as a separate line-item on the proposal in accordance with Article 1.4B, above. Subcontractors and vendors shall also provide cost breakdowns in accordance with the requirements of the Contract and this Section.

B. Labor: Contractor will be paid cost of labor for workers (including forepersons when authorized by Architect) used in actual and direct performance of extra work. Labor rate, whether employer is Contractor, subcontractor or other forces, will be sum of following:

1. Actual Wages - Actual wages paid shall include any employer payments to or on behalf of workers for health and welfare, pension, vacation and similar purposes.

2. Labor Surcharge - Payments imposed by the City of Morgan Hill, State and Federal laws and ordinances, and other payments made to, or on behalf of, workers, other than actual wages as defined in subparagraph 1 above, such as taxes and insurances. Labor surcharge shall be as set forth in California Department of Industrial Relations labor rate classification schedule which is in effect on date upon which extra work is accomplished and which schedule is incorporated herein by reference as though fully set forth herein.

C. Material: Only materials furnished by Contractor and necessarily used in performance of extra work will be paid for. Cost of such materials will be cost, including sales tax, to purchaser (Contractor, subcontractor or other forces) from supplier thereof, except as the following are applicable:

1. If cash or trade discount by actual supplier is offered or available to purchaser, it shall be credited to the City of Morgan Hill notwithstanding fact that such discount may not have been taken.

2. For materials salvaged upon completion of extra work, salvage value of materials shall be deducted from cost, less discount, of materials.

3. If cost of a material is, in opinion of Architect, excessive, then cost of material shall be deemed to be lowest current wholesale price at which material is available in quantities concerned delivered to Site, less any discounts as provided in subparagraph 1 above.

D. Equipment Rental: For Contractor or subcontractor-owned equipment, payment will be made at rental rates listed for equipment in California Department of Transportation official equipment rental rate schedule which is in effect on date upon which extra work is accomplished and which schedule is incorporated herein by reference as though fully set forth herein. For rented equipment, payment will be made based on actual rental invoices. Equipment used on extra work shall be of proper size and type. If, however, equipment of unwarranted size or type and cost is used, cost of use of equipment shall be calculated at rental rate for equipment of proper size and type. Rental rates paid shall be deemed to cover cost of fuel, oil, lubrication, supplies, small tools, necessary attachments, repairs and maintenance of any kind, depreciation, storage, insurance, and all incidentals. Unless otherwise specified, manufacturer's ratings, and manufacturer approved modifications, shall be used to classify equipment for determination of applicable rental rates. Individual pieces of equipment or tools not listed in said publication and having a replacement value of one hundred dollars ($100) or less, whether or

not consumed by use, shall be considered to be small tools and no payment will be made therefor as payment is included in payment for labor. Rental time will not be allowed while equipment is inoperative due to breakdowns.

1. For equipment on Site, rental time to be paid for equipment shall be time equipment is in operation on extra work being performed or on standby as approved by Architect. The following shall be used in computing rental time of equipment:

    a. When hourly rates are listed, less than thirty (30) minutes of operation shall be considered to be one-half (1/2) hour of operation.

    b. When daily rates are listed, less than four (4) hours of operation shall be considered to be one-half (1/2) day of operation.

2. For equipment which must be brought to Site to be used exclusively on extra work, cost of transporting equipment to Site and its return to its original location shall be determined as follows:

    a. The City of Morgan Hill will pay for costs of loading and unloading equipment.

    b. Cost of transporting equipment in low bed trailers shall not exceed hourly rates charged by established haulers.

    c. Cost of transporting equipment shall not exceed applicable minimum established rates of California Public Utilities Commission.

    d. Payment for transporting, and loading and unloading equipment as above provided will not be made if equipment is used on Work in any other way than upon extra work.

3. Rental period shall begin at time equipment is unloaded at Site of extra work and terminate at end of day on which Architect directs Contractor to discontinue use of equipment. Excluding Saturdays, Sundays, and legal holidays, unless equipment is used to perform extra work on such days, rental time to be paid per day shall be four (4) hours for zero (0) hours of operation, six (6) hours for four (4) hours of operation and eight (8) hours for eight (8) hours of operation, time being prorated between these parameters. Hours to be paid for equipment which is operated less than eight (8) hours due to breakdowns, shall not exceed eight (8) less number of hours equipment is inoperative due to breakdowns.

E. Work Performed by Special Forces or Other Special Services: When Architect and Contractor, by agreement, determine that special service or item of extra work cannot be performed by forces of Contractor or those of any subcontractors, service or extra work item may be performed by specialist. Invoices for service or item of extra work on basis of current market price thereof may be accepted without complete itemization of labor, material, and equipment rental costs when it is impracticable and not in accordance with established practice of special service industry to provide complete itemization. In those instances wherein Contractor is required to perform extra work necessitating a fabrication or machining process in a fabrication or machine shop facility away from Site, charges for that portion of extra work performed in such facility may, by agreement, be accepted as a specialist billing. Architect must be notified in advance of all off site work. To specialist invoice price, less credit to the City of Morgan Hill for any cash or trade discount offered or available, whether or not such discount may have been taken, will be added 15 percent (15%) in lieu of overhead and profit provided in Paragraph 1.4B, above.

F. Deleted Work and Credits: When a change request, RFI, RFP, or Construction Change Directive includes both additive and deductive work, the total mark-up shall be on the net sum of the change.

1.7 FORCE-ACCOUNT

A. If it is impracticable because of nature of work, or for any other reason, to fix an increase or decrease in price definitely in advance, a Construction Change Directive may be issued in accordance with Article 7.3 Construction Change Directives from General Conditions of the Contract for Construction, AIA Document A201-1997 (included in Part A of this book) to fix a maximum price which shall not under any circumstances be exceeded, and subject to such limitation, such alteration, modification or extra shall be paid for at actual necessary cost as determined by the City of Morgan Hill, which cost shall be determined pursuant to Article 1.4, above, and shall be known as Force-Account work.

B. Whenever any Force-Account work is in progress, definite price for which has not been agreed on in advance, Contractor shall report to Architect each day in writing in detail amount and cost of labor and material used, and any other expense incurred in Force-Account work on preceding work day, and no claim for compensation for Force-Account work will be allowed unless report shall have been made.

C. Above described methods of determining payment for work and materials shall not apply to performance of work or furnishings of material which, in judgment of Architect, may properly be classified under items for which prices are established in Contract.

1.8 FURNISHED MATERIALS

A. The City of Morgan Hill reserves right to furnish materials as it deems advisable, and Contractor shall have no claims for costs and overhead and profit on such materials.

1.9 OVERHEAD DEFINED

A. The following constitutes charges that are included in overhead for all contract modifications, including Force-Account work:

1. Drawings: field drawings, shop drawings, etc. including submissions of drawings.

2. Routine field inspection of work proposed.

3. General Superintendence.

4. General administration and preparation of change orders.

5. Computer services.

6. Reproduction services.

7. Salaries of project engineer, project manager, superintendent, timekeeper, storekeeper and secretaries.

8. Janitorial services.

9. Temporary on-site facilities.

a. Offices

b. Telephones

c. Plumbing

d. Electrical: Power, lighting

e. Platforms

f. Fencing, and so on.

g. Home office expenses.

h. Procurement and use of vehicles and fuel used coincidentally in base bid work.

i. Surveying

j. Estimating

k. Protection of work

l. Final cleanup

m. Other incidental work

1.10 RECORDS AND CERTIFICATION

A. Force-Account (cost reimbursement) charges shall be recorded daily upon Cost Breakdown for Contract Modification Form obtained from or approved by the Architect. Contractor or authorized representative shall complete and sign form. Architect or Inspector shall sign form indicating approval of labor and equipment hours and material used only. Contract Modification Form shall provide names and classifications of workers and hours worked by each, itemize materials used, and also list size type and identification number of equipment, and hours operated, and shall indicate work done by specialists.

B. No payment for Force-Account work shall be made until Contractor submits original invoices substantiating materials and specialist charges.

C. The City of Morgan Hill shall have the right to audit all records in possession of Contractor relating to activities covered by Contractor's claims for modification of Contract, including Force-Account work, as set forth in Article 7.3 Construction Change Directives from General Conditions of the Contract for Construction, AIA Document A201-1997 (included in Part A of this book).

D. Further, the City of Morgan Hill shall have right to audit, inspect, or copy all records maintained in connection with this Contract, including financial records, in possession of Contractor relating to any transaction or activity occurring or arising out of, or by virtue of, Contract. If Contractor is a joint venture, right of the City of Morgan Hill shall apply collaterally to same extent to records of joint venture sponsor, and of each individual joint venture member.

## 2.0 PRODUCTS

A. Not applicable to this Section.

## 3.0 EXECUTION

A. Not applicable to this Section.

**END OF SECTION**

# SECTION 012613 - REQUESTS FOR INFORMATION

## 1.0 GENERAL

### 1.1 SUMMARY

A. This Section includes the procedures to be followed by the Contractor upon discovery of any apparent conflicts, omissions, or errors in the contract documents, or upon having any questions concerning interpretation.

### 1.2 RELATED SECTIONS

A. Documents affecting work of this Section include, but are not necessarily limited to, General Conditions, Special Conditions and Division 1 of these Contract Documents.

B. Section 012100 - Project Control System

### 1.3 PROCEDURES

A. Notification by Contractor: Should the Contractor discover conflicts, omissions, or errors in the contract documents, or have any questions concerning interpretation or clarification of the contract documents, or if it appears to the contractor that work to be done or any matter relative thereto are not sufficiently detailed or explained in the contract documents, then, before proceeding with the work affected, the Contractor shall immediately notify the Architect in writing and request interpretation, clarification, or additional detailed instructions concerning the work. The Contractor shall ask for any clarification or request for information immediately upon discovery, but no less than fifteen (15) days prior to the start date of the activities related to the clarification, based on the latest updated version of the accepted contract schedule.

B. Form: The Contractor shall submit all requests for clarification and/or additional information in writing to the Architect using the Request For Information (RFI) procedure as outlined in Section 012100, Project Control System.

C. The Contractor will number RFIs consecutively with the date of issue, except for reissuance of a respective RFI in which the subscript a, b, c, and so on, will be added until the RFI is resolved.

D. Response Time: The Architect, whose decision will be final and conclusive, shall resolve such questions and issue instruction to the Contractor within a reasonable amount of time, but no less than 14 calendar days. In some cases, this time may need to be lengthened or shortened for emergency situations as mutually agreed upon by all parties. Should the Contractor proceed with the work affected before receipt of a response from the Architect within the response time described above, any portion of the work which is not done in accordance with the Architect's interpretation,

clarifications, instructions, or decisions subject to removal or replacement and the Contractor shall be responsible for all losses.

E. Reason for Submission: The Contractor may submit RFIs if one of the following conditions occur:

1. The Contractor discovers an unforeseen condition or circumstance that is not described in the contract documents.

2. The Contractor discovers an apparent conflict or discrepancy between portions of the contract documents and appears to be inconsistent or is not reasonably inferred from the intent of the contract documents.

3. The Contractor discovers what appears to be an omission from the contract documents that cannot be reasonably inferred from the intent of the contract documents.

F. Rejections: RFIs will not be recognized or accepted if in the opinion of the Architect one of the following conditions exists:

1. The Contract submits an RFI as a submittal.

2. The Contractor submits the RFI under the pretense of a contract documents discrepancy or omission without thoroughly reviewing the documents.

3. The Contractor submits the RFI in a manner that suggests that specific portions of the contract documents are assumed to be excluded, or taken as an isolated portion of the contract documents in part rather than whole.

4. The Contractor submits an RFI in an untimely manner without proper coordination and scheduling of work or related trades.

G. Subject: Each RFI shall be limited to one subject.

H. Additional Detailed Instructions: The Architect may furnish additional detailed written instructions to further explain the work, and such instructions shall be a part of the contract documents. Should additional detailed instructions in the opinion of the Contractor constitute work in excess of the scope of the contract the Contractor shall submit notification immediately and written notification thereof to the Architect no more than seven calendar days following receipt of such instruction, and in any event prior to the commencement of work thereon. The Architect will then consider such notice, and if the Architect considers it justified, the Architect's instructions will be revised or a proposed change order will be issued. The Contractor shall have no claim for additional compensation or extension of the schedule because of any such additional instructions unless the Contractor provides the Architect written notice thereof within the time frame specified above. In addition, the Contractor shall within 15 days from the date of notification provide detailed justification and analysis as well as compete pricing and schedule CPM network analysis to support any request for time extension. For more details, see Article 7 Changes in the Work from General

Conditions of the Contract for Construction, AIA Document A201-1997 (Part A of this book).

## 2.0 PRODUCTS

A. Not applicable to this Section.

## 3.0 EXECUTION

A. Not applicable to this Section.

**END OF SECTION**

# SECTION 013113 - PROJECT COORDINATION

## 1.0 GENERAL

### 1.1 SUMMARY

A. This Section includes all labor, materials, equipment, operations, or methods listed, mentioned or scheduled on the plans and/or herein specified, including all incidentals necessary and required for completion of work under this Section.

B. Coordinate the Work; do not delegate the responsibility for coordination to any Subcontractor.

1. Resolve differences or disputes concerning coordination, interference, or extent of Work of the various Sections.

2. The Contractor's decisions regarding work by subcontractors, if consistent with the requirements of the Contract Documents, shall be final.

C. Coordinate Work to assure efficient and orderly sequence of installation of construction elements.

D. Perform and complete checking and coordination before commencing Work in the affected areas.

E. Verify characteristics of interrelated operating equipment are compatible; coordinate Work having interdependent responsibilities for installing, connection to, and placing such equipment in service.

F. Provide basic layouts of grid lines and station points on subfloors as necessary to facilitate coordination and layout of partitions and Work at and above ceilings.

G. Make provisions for accommodating Work to be provided by others.

### 1.2 RELATED SECTIONS

A. Documents affecting work of this Section include, but are not necessarily limited to, General Conditions, Special Conditions and Division 1 of these Contract Documents.

### 1.3 COORDINATION DRAWINGS

A. Prepare large-scale coordination drawings before beginning fabrication or delivery of materials and equipment to the job site.

1. Drawings shall clearly indicate coordination of mechanical, electrical, and equipment installations with structural and architectural elements.

B. Keep copies of coordination drawings at the job site.

C. The Architect will verify that coordination drawings have been made, but no review of the drawings will be made.

1.4 MECHANICAL AND ELECTRICAL COORDINATION

A. Use coordination drawings of mechanical and electrical Work, together with Shop Drawings and layout drawings of affected Work to check; coordinate and integrate the Work to prevent interferences.

B. Coordinate space requirements and installation of mechanical and electrical Work which are indicated diagrammatically on Drawings.

C. Routing shown for pipes, ducts, and conduits is diagrammatic only; make runs parallel with lines of building.

D. Utilize spaces efficiently to maximize accessibility for other installation, for maintenance, and for repairs.

E. Conceal pipes, ducts, and wiring in finished areas, unless otherwise indicated; coordinate locations of fixtures and outlets with finish elements.

**2.0 PRODUCTS**

A. Not applicable to this Section.

**3.0 EXECUTION**

A. Not applicable to this Section.

**END OF SECTION**

# SECTION 013119 - PROJECT MEETINGS

## 1.0 GENERAL

### 1.1 PRECONSTRUCTION CONFERENCE

A. Prior to commencement of Work, a preconstruction conference will be held to discuss procedures to be followed during the progress of the Work.

1. The preconstruction conference will be held at a location designated by the Architect.

B. Attending the conference shall be:

1. Morgan Hill Centennial Recreation Center's representatives.
2. City of Morgan Hill representatives.
3. Architect's representatives.
4. Architect's subconsultants.
5. Contractor's representatives.
6. Contractor's superintendent.
7. Designated major Subcontractors.
8. Others requested by the Architect.

### 1.2 PROGRESS MEETINGS

A. Weekly progress meetings will be held throughout the progress of the Work; location shall be in Architect's field office.

B. The Architect will prepare agenda with copies for participants, preside at meetings, record minutes and distribute copies within three (3) work days to the Architect, meeting participants, and those affected. Procore will be used for the meeting documentation.

C. Attendance and Participation: Project superintendent, Morgan Hill Centennial Recreation Center, Architect, Architect's subconsultants, City of Morgan Hill representatives, Centennial Recreation Center's representative consultants, and major subcontractors as appropriate to agenda topics for each meeting.

D. Suggested Agenda: Review of Work progress, status of progress CPM schedule and adjustments, delivery schedules, submittal status report, RFI

status report, maintenance of quality standards, pending changes, and substitutions.

E. Special Meetings: Schedule and administer other meetings as required by the progress of the Work and to review provisions and tests specified elsewhere in the Contract Documents.

1. Schedule special meetings when so requested by the Architect.

1.3 BILLING MEETINGS

A. As part of the last progress meeting each month, schedule and hold a billing meeting, with the Architect in attendance.

1. Purpose of billing meeting is for agreeing on the percentage of Work completed to that date and to establish the sum to be requested in the Application for Payment.

B. Prepare an itemized draft of the month's proposed billing for review at the meeting.

1.4 PRE-INSTALLATION/APPLICATION MEETINGS

A. Meetings to review installation and application shall be scheduled a minimum of fourteen (14) days prior to the start of installations and applications.

1. Attending shall be Project superintendent, Morgan Hill Centennial Recreation Center, the City of Morgan Hill, Architect, manufacturers' representatives and installers of products involved, other installers whose Work may affect or be affected by the Work to be reviewed, and Testing Laboratory Inspector.

B. Review in detail the Contract Documents and manufacturers' requirements, Specifications, installation drawings and details, and Drawings and Details of affected Work.

1. Resolve discovered and anticipated conflicts, incompatibilities, and inadequacies at the conference.

C. Review in detail Project conditions, schedules, construction sequence, requirements for applications and qualities of completed applications, and protection of adjacent Work and property.

D. Review in detail means of protecting the completed applications during the remainder of the construction period.

1.5 SCHEDULE APPROVAL MEETINGS

A. Prior to approval of the CPM schedule, the Architect may require that the Contractor and its Subcontractors attend meetings to ascertain information for approval of the CPM schedule.

B. This information may include, but will not be limited to, productivity, manpower loading, equipment planning, activity durations, logic, cost loading, and other pertinent matters.

C. Attending shall be the Contractor, Subcontractors as appropriate, suppliers as appropriate, and others as appropriate.

**2.0 PRODUCTS**

A. Not applicable to this Section.

**3.0 EXECUTION**

A. Not applicable to this Section.

**END OF SECTION**

# SECTION 013200 - CONSTRUCTION PROGRESS DOCUMENTATION: SCHEDULES AND REPORTS

## 1.0 GENERAL

### 1.1 SUMMARY

A. This Section includes all labor, materials, equipment, operations, or methods listed, mentioned or scheduled on the plans and/or herein specified, including all incidentals necessary and required for completion of work under this Section.

B. Scheduling of Work under this Contract shall be performed by Contractor in accordance with requirements of this Section.

C. Upon Award of Contract, Contractor shall immediately commence development of the Schedule to ensure compliance with schedule submittal requirements.

D. Contract schedule shall be based on and incorporate Contract milestone and completion dates specified in Contract Documents.

E. Overall time of completion and time of completion for each milestone shown on Contract schedule shall adhere to times specified in the Contract Special Provisions.

1. The Architect is not required to accept an earlier (advanced) schedule.

2. Contractor shall not be entitled to any compensation for any field or home office overhead in event agreement is not reached on an earlier (advanced) schedule and Contractor completes its Work, for whatever reason, beyond completion date shown in earlier (advanced) schedule.

3. A schedule showing the work completed in less than the Contract time, which has been accepted by the Architect, shall be considered to have Project Float. The Project Float is the time between the scheduled completion of the work and Contract Substantial Completion.

4. Project Float is a resource available to both the Architect and the Contractor.

F. Contract schedule shall be basis for evaluating job progress, payment requests, and time extension requests. Responsibility for developing Contract CPM schedule and monitoring actual progress as compared to schedule rests with Contractor.

G. Failure of Contract schedule to include any element of the Work or any inaccuracy in Contract Schedule will not relieve Contractor from responsibility for accomplishing the Work in accordance with the Contract.

H. Float Ownership:

1. The Project owns the float. As such, liability for delay of the Substantial Completion Date rests with the party whose actions, last in time, actually cause delay to the Substantial Completion.

a. For example, if Party A uses some, but not all of the float and Party B later uses remainder of the float as well as additional time beyond the float, Party B shall be liable for the time that represents a delay to the Substantial Completion Date.

b. Under this scenario, Party A would not be responsible for the time since it did not consume all of the float and additional float remained; therefore, the Substantial Completion Date was unaffected.

I. Progress Schedule shall be the basis for evaluating job progress, payment requests, and time extension requests. Responsibility for developing Contract schedule and monitoring actual progress as compared to Progress Schedule rests with Contractor.

J. Failure of Progress Schedule to include any element of the Work or any inaccuracy in Progress Schedule will not relieve Contractor from responsibility for accomplishing the Work in accordance with the Contract. The City of Morgan Hill's acceptance of Schedule shall be for its use in monitoring and evaluating job progress, payment requests, and time extension requests, and shall not, in any manner, impose a duty of care upon the City of Morgan Hill or act to relieve Contractor of its responsibility for means and methods of construction.

## 1.2 RELATED SECTIONS

A. Documents affecting work of this Section include, but are not necessarily limited to, General Conditions, Special Conditions and Division 1 of these Contract Documents.

## 1.3 ORIGINAL CPM SCHEDULE

A. Within thirty (30) calendar days after the Notice to Proceed date, submit a detailed proposed Original CPM Schedule presenting an orderly and realistic plan for completion of the Work, in conformance with requirements as specified herein.

B. Contract schedule shall furnish or comply with following requirements:

1. Time-scaled CPM schedule.

2. No activity on schedule shall have duration longer than fifteen (15) workdays, with exception of submittal, approval, fabrication and procurement activities, unless otherwise approved by the Architect.

   a. Activity durations shall be total number of actual work days required to perform that activity excluding consideration of weather impact on completion of that activity.

3. Procurement of major equipment, through receipt and inspection at jobsite, identified as a separate activity.

4. District furnished materials and equipment, if any, identified as separate activities.

5. Dependencies (or relationships) between activities.

6. Processing/approval of submittals and shop drawings for all Contract-required material and equipment. Activities that are dependent on submittal acceptance or material delivery shall not be scheduled to start earlier than expected acceptance or delivery dates.

   a. The duration for review and approval of submittals and shop drawings shall be as specified in Section 013300, Submittal Procedures. Contractor shall be responsible for all impacts resulting from resubmittal of shop drawings and submittals.

7. Twenty (20) workdays for developing punch list(s), completion of punch list items, and final clean-up for the Work or any designated portion thereof.

   a. No other activities shall be scheduled during this period.

8. Interface with the Work of other contractors (and agencies such, as but not limited to, utility companies).

9. Show detailed Subcontractor Work activities.

10. Activity durations shall be in Work days.

C. Adjustments to Original CPM Schedule: Within fourteen (14) calendar days after receipt of the Architect's response to the Contractor's Original CPM Schedule, the Contractor shall have adjusted the Original CPM Schedule

submittal to address all review comments and resubmit for the Architects review.

1. The Architect, within ten (10) calendar days from date that Contractor submitted the revised schedule, will either (1) accept schedule as submitted, or (2) advise Contractor in writing to review any part or parts of schedule which either do not meet Contract requirements or are unsatisfactory for the Architect to monitor Project's progress, resources and status or evaluate monthly payment request by Contractor.

2. The Architect may accept schedule with conditions. At the first monthly meeting the CPM schedule update shall be revised to correct deficiencies identified.

3. When schedule is accepted, it shall be considered as the "Original CPM Schedule" which will then be immediately updated to reflect the current status of the work.

4. The Architect reserves right to require the Contractor to adjust, add to, or clarify any portion of schedule which may later be discovered to be insufficient for monitoring of Work or approval of partial payment requests. No additional compensation will be provided for such adjustments, additions, or clarifications.

D. Acceptance: Acceptance of Contractor's schedule by the Architect will be based solely upon schedule's compliance with Contract requirements.

1. By way of Contractor assigning activity durations and proposing sequence of Work, Contractor agrees to utilize sufficient and necessary management and other resources to perform work in accordance with the schedule.

2. Upon submittal of schedule update, updated schedule shall be considered "current" CPM schedule.

3. Submission of Contractor's schedule to the Architect shall not relieve Contractor of total responsibility for scheduling, sequencing, and pursuing Work to comply with requirements of Contract Documents, including adverse effects such as delays resulting from ill-timed work.

E. Submittal of Original CPM Schedule, and subsequent schedule updates, shall be understood to be Contractor's representation that the Schedule meets requirements of Contract Documents and that Work shall be executed in sequence indicated on the schedule.

F. Contractor shall distribute Original CPM Schedule to Subcontractors for review and acceptance.

1.4 MONTHLY CPM SCHEDULE UPDATE SUBMITTALS

A. Following acceptance of Contractor's Original CPM Schedule, Contractor shall monitor progress of Work and adjust schedule each month to reflect actual progress and any anticipated changes to planned activities.

1. Each schedule update submitted shall be complete, including all information requested for the Original CPM Schedule submittal.

2. Each update shall continue to show all work activities including those already completed.

3. These completed activities shall accurately reflect "as built" information by indicating when activities were actually started and completed.

4. Within seven (7) calendar days of receipt of above noted update, the Architect will either accept or reject monthly schedule update submittal.

a. If accepted, percent complete shown in monthly update will be basis for Application for Payment by the Contractor. The schedule update shall be submitted as part of the Contractor's Application for Payment.

b. If rejected, update shall be corrected and resubmitted by Contractor before the Application for Payment is submitted.

1.5 SCHEDULE REVISIONS

A. Updating the Schedule to reflect actual progress shall not be considered revisions to the Schedule. Since scheduling is a dynamic process, revisions to activity durations and sequences are expected on a monthly basis.

B. If the Contractor's revision is not accepted by the Architect, and the Contractor disagrees with the Architect's position, the Contractor has seven (7) calendar days from receipt of the Architect's letter, to provide a written narrative explaining its position. If the Architect still does not agree with the Contractor's position, the Architect's position shall govern, and the schedule shall be updated in accordance with the Architect's request. The Contractor's failure to respond in writing within seven (7) calendar days shall be contractually interpreted as acceptance of the Architect's position, and the

Contractor waives its rights to subsequently dispute or file a claim regarding the Architect's position.

C. At the Architect's discretion, the Contractor can be required to provide subcontractor certifications for revisions affecting said subcontractors.

1.6 RECOVERY SCHEDULE

A. If the Schedule Update shows a substantial completion date fourteen (14) calendar days beyond the Contract Substantial Completion date, the Contractor shall submit to the Architect the proposed revisions to recover the lost time within seven (7) calendar days. As part of this submittal, the Contractor shall provide a written narrative for each revision made to recapture the lost time.

B. If the Contractor's revisions are not accepted by the Architect, the Contractor shall follow the procedures in Paragraph 1.4, above.

C. At the Architect's discretion, the Contractor can be required to provide subcontractor certifications for revisions affecting said subcontractors.

1.7 TIME IMPACT EVALUATION FOR CHANGE ORDERS, AND OTHER DELAYS

A. When the Contractor is directed to proceed with changed work, the Contractor shall prepare and submit, within fourteen (14) calendar days from the direction to proceed, a Time Impact Evaluation (TIE) which includes both a written narrative and a schedule diagram depicting how the changed work affects other schedule activities. The schedule diagram shall show how the Contractor proposes to incorporate the changed work in the schedule, and how it impacts the current schedule update critical path. The Contractor is also responsible for requesting time extensions based on the TIE's impact on the critical path. The diagram must be tied to the main sequence of schedule activities to enable the City of Morgan Hill to evaluate the impact of changed work to the scheduled critical path.

B. The Contractor shall be required to comply with the requirements of Paragraph 1.6A, above, for all types of delays such as, but not limited to, Contractor/Subcontractor delays, adverse weather delays, strikes, procurement delays, fabrication delays, and so on.

C. The Contractor shall be responsible for all costs associated with the preparation of Time Impact Evaluations, and the process of incorporating them into the current schedule update.

D. Once agreement has been reached on a TIE, the Contract Times will be adjusted accordingly. If agreement is not reached on a TIE, the Contract

Times may be extended in an amount the City of Morgan Hill allows, and the Contractor may submit a claim for additional time claimed by contractor.

1.8 TIME EXTENSIONS

A. The Contractor is responsible for requesting time extensions for time impacts that, in the opinion of the Contractor, impact the critical path of the current schedule update. Notice of time impacts shall be given in accordance with Article 4 and 8 of the Contract General Conditions (refer to AIA Document A201-1997, included in Part A of this book).

B. Where an event for which the City of Morgan Hill is responsible impacts the projected Substantial Completion date, the Contractor shall provide a written mitigation plan, including a schedule diagram, which explains how (for example, increase crew size, overtime, and so on) the impact can be mitigated. The Contractor shall also include a detailed cost breakdown of the labor, equipment and material the Contractor would expend to mitigate the City of Morgan Hill caused time impact. The Contractor shall submit its mitigation plan to the City of Morgan Hill within fourteen (14) calendar days from the date of discovery of said impact. The Contractor is responsible for the cost to prepare the mitigation plan.

C. Failure to request time, provide TIE, or provide the required mitigation plan will result in Contractor waiving its right to a time extension and cost to mitigate the delay.

D. No time will be granted under this Contract for cumulative effect of changes.

E. The City of Morgan Hill not be obligated to consider any time extension request unless requirements of Contract Documents are complied with.

F. Failure of the Contractor to perform in accordance with the current schedule update shall not be excused by submittal of time extension requests.

G. If the Contractor does not submit a TIE within the required fourteen (14) calendar days for any issue, it is mutually agreed that the Contractor does not require a time extension for said issue.

H. The City of Morgan Hill will grant day-for-day non-compensable time extensions for delays to the critical path due to inclement weather.

## 2.0 PRODUCTS

A. Not applicable to this Section.

## 3.0 EXECUTION

A. Not applicable to this Section.

**END OF SECTION**

# SECTION 013300 - SUBMITTAL PROCEDURES

## 1.0 GENERAL

### 1.1 SUMMARY

A. This Section includes all labor, materials, equipment, operations, or methods listed, mentioned or scheduled on the plans and/or herein specified, including all incidentals necessary and required for completion of work under this Section.

B. This Section describes general requirements for submittals for the work specified in these Contract Documents.

1. Procedures.
2. Safety Plan.
3. Progress Schedule.
4. Shop Drawings.
5. Samples.
6. Quality Control Submittals.
   a. Design Data.
   b. Test Reports.
   c. Certificates.
   d. Manufacturers' Instructions.
7. Operations and Maintenance Manuals.
8. Project Record Documents.

### 1.2 RELATED SECTIONS

A. Documents affecting work of this Section include, but are not necessarily limited to, General Conditions, Special Conditions and Division 1 of these Contract Documents.

B. Section 011000 - Summary of Work

C. Section 012100 - Project Control System

D. Section 012200 - Unit Prices: Measurement and Payment

E. Section 012600 - Modification Procedures

F. Section 017700 - Contract Closeout Procedures

1.3 PROCEDURES

A. Provide all submittals through Procore

B. Submit at own expense Schedule of Shop Drawing and Sample Submittals, Safety Plans, Progress Schedule, Product Data, Shop Drawings, Samples, Operations and Maintenance Manuals, and Project Record Documents required by the Contract Documents.

C. Transmit each item with a standard letter of transmittal in form approved by Architect.

D. Identify project, Contractor, subcontractor, major supplier, pertinent drawing sheet and data number, and specification Section number as appropriate. Provide space for Contractor and Architect review stamps.

E. Where manufacturer's standard drawings or data sheets are used, they shall be marked clearly show those portions of the data which are applicable to this project.

F. Submit Shop Drawings, Samples and other submittals to Architect for review and approval in accordance with accepted Contract Schedule. If no such schedule is agreed upon, then all Shop Drawing, Samples and product data submittals shall be completed within thirty (30) days after receipt of Notice to Proceed from the City of Morgan Hill. The data shown on the Shop Drawings shall be complete with respect to quantities, dimensions, specified performance and design criteria, materials and similar data to show Architect the materials and equipment Contractor proposes to provide and to enable Architect to review the information for the limited purposes specified below. Samples shall be identified clearly as to material, supplier, pertinent data such as catalog numbers and the use for which it is intended and otherwise as Architect may require to enable Architect to review the submittal. The number of each Sample to be submitted will be as specified in the Specifications.

G. At the time of each submission, Contractor shall give Architect specific written notice of all variations, if any, that the Shop Drawing or Sample submitted may have from the requirements of the Contract Documents, and the reasons therefore. This written notice shall be in a written communication separate from the submittal. In addition, Contractor shall cause a specific notation to be made on each Shop Drawing and Sample submitted to Architect

for review and approval of each such variation. If the City of Morgan Hill accepts deviation, the District shall issue appropriate Contract Modification.

H. Submittal coordination and verification is responsibility of Contractor; this responsibility shall not be delegated in whole or in part to subcontractors or suppliers. Before submitting each Shop Drawing or Sample, Contractor shall have determined and verified:

1. All field measurements, quantities, dimensions, specified performance criteria, installation requirements, materials, catalog numbers and similar information with respect thereto;

2. All materials with respect to intended use, fabrication, shipping, handling, storage assembly and installation pertaining to the performance of the Work;

3. All information relative to Contractor's sole responsibilities and of means, methods techniques, sequences and procedures of construction and safety precautions and programs incident thereto.

I. Contractor shall also have reviewed and coordinated each Shop Drawing or Sample with other Shop Drawings and Samples and with the requirements of the Work and the Contract Documents.

J. Contractor's submission to Architect of a Shop Drawing or Sample submittal will constitute Contractor's representation that it has satisfied its obligations under the Contract Documents, and as set forth immediately above, with respect to Contractor's review and approval of that submittal.

K. Designation of work "by others," if shown in submittals, shall mean that work will be responsibility of Contractor rather than subcontractor or supplier who has prepared submittals.

L. After review by Architect of each of Contractor's submittals, one of set of duplicates of material will be returned to Contractor with actions defined as follows:

1. APPROVED - Accepted subject to its compatibility with future submittals and additional partial submittals for portions of the work not covered in this submittal. Does not constitute approval or deletion of specified or required items not shown on the submittal.

2. APPROVED AS NOTED (NO RESUBMISSIONS REQUIRED) - Same as 1 above, except that minor corrections as noted shall be made by Contractor.

3. REVISE AND RESUBMIT - Rejected because of major inconsistencies or errors which shall be resolved or corrected by Contractor prior to subsequent review by Architect.

4. REJECTED - RESUBMIT - Submitted material does not conform to Plans and Specifications in major respect, that is, wrong size, model, capacity, or material.

M. It is considered reasonable that Contractor shall make a complete and acceptable submittal at least by second submission. The City of Morgan Hill reserves the right to deduct monies from payments due Contractor to cover additional costs of Architect's review beyond the second submission. Illegible submittals will be rejected and returned to Contractor for resubmission.

N. Favorable review will not constitute acceptance by the City of Morgan Hill or Architect of any responsibility for the accuracy, coordination and completeness of the submittals.

O. Accuracy, coordination, and completeness of Submittals shall be sole responsibility of Contractor, including responsibility to backcheck comments, corrections, and modifications from the City of Morgan Hill's or Architect's review before fabrications. Submittals may be prepared by Contractor, subcontractors, or suppliers, but Contractor shall ascertain that submittals meet requirements of Contract Documents, while conforming to structural space and access conditions at point of installation. Architect's review will be only to determine if the items covered by the submittals will, after installation or incorporation in the Work, conform to the information given in the Contract Documents and be compatible with the design concept of the completed Project as a functioning whole as indicated by the Contract Documents. Favorable review of submittal, method of work, or information regarding materials and equipment Contractor proposes to furnish shall not relieve Contractor of responsibility for errors therein and shall not be regarded as assumption of risks or liability by Architect or the City of Morgan Hill, or any officer or employee thereof, and Contractor shall have no claim under Contract on account of failure or partial failure or inefficiency or insufficiency of any plan or method of work or material and equipment so accepted. Favorable review shall be considered to mean merely that Project Management or the City of Morgan Hill has no objection to Contractor using, upon his own full responsibility, plan or method of work proposed, or furnishing materials and equipment proposed.

P. Architect's review will not extend the means, methods, techniques, sequences or procedures of construction or to safety precautions or programs incident thereto. The review and approval of a separate item as such will not indicate approval of the assembly in which the item functions.

Q. Submit complete initial submittal for those items where required by individual specification Sections. Complete submittal shall contain sufficient data to demonstrate that items comply with Specifications, shall meet minimum requirements for submissions cited in technical specifications, shall include motor data and seismic anchorage certifications, where required, and shall include necessary revisions required for equipment other than first named. If Contractor submits incomplete initial submittal, when complete submittal is required, submittal may be returned to Contractor without review.

R. It shall be Contractor's responsibility to copy, conform and distribute reviewed submittals in sufficient numbers for Contractor's files, subcontractors and vendors.

S. After Architect review of submittal, revise and resubmit as required. Identify changes made since previous submittal.

1. Begin no fabrication or work which require submittals until return of submittals not requiring resubmittal.

2. Normally, submittals will be processed and returned to Contractor within [15] working days of receipt.

T. Distribute copies of reviewed submittals to concerned persons. Instruct recipients to promptly report any inability to comply with provisions.

1.4 SAFETY PLAN

A. Submit Safety Plan specific to this Contract to Architect within fifteen (15) calendar days after Start Date of the Contract Times.

B. Electronic copy of accepted Safety Plan will be returned to Contractor.

C. No on-site work shall be started until Safety Plan has been reviewed and accepted by Architect and/or Local Building Official. Acceptance of Safety Plan shall not affect Contractor's responsibility for maintaining a safe working place and instituting safety programs in connection with project.

1.5 PROGRESS SCHEDULE

A. See Section 013200, Construction Progress Documentation: Schedules and Reports, for schedule and report requirements.

B. Submit an electronic copy of schedule at each of the following times:

1. Original CPM (Critical Path Method) Schedule within thirty (30) days of the Notice to Proceed.

2. Adjustments to the CPM Schedule as required.

3. CPM Schedule updates monthly, five (5) days prior to monthly progress meeting.

C. Progress Schedules and Reports shall be submitted through Procore.

1.6 SHOP DRAWINGS

A. All Shop Drawings shall be submitted through Procore.

B. Minimum Sheet Size: 8-1/2 inches by 11 inches. All others: Multiples of 8-1/2 inches by 11 inches, 34 inches by 44 inches maximum.

C. Original electronic copy will be marked with Architect's review comments and returned to Contractor.

D. Mark each copy to identify applicable Products, models, options, and other data; supplement manufacturers' standard data to provide information unique to Work.

E. Include manufacturers' installation instructions when required by specification Section.

1.7 SAMPLES

A. Submit full range of manufacturers' standard colors, textures, and patterns for Architect's selection.

B. Submit samples to illustrate functional and aesthetic characteristics of Product, with integral parts and attachment devices. Coordinate submittal of different categories for interfacing work.

C. Include identification on each sample, giving full information.

D. Submit two (2) samples unless otherwise specified. One (1) will be retained.

E. Sizes: Unless otherwise specified, provide the following:

1. Paint Chips: Manufacturers' standard.

2. Flat or Sheet Products: Minimum 6 inches square, maximum 12 inches square.

3. Linear Products: Minimum 6 inches, maximum 12 inches long.

4. Bulk Products: Minimum 1 pint, maximum 1 gallon.

F. Full size samples may be used in Work upon approval.

G. Mock-ups:

1. Erect field samples and mock-ups at Project site in accordance with requirements of specification Sections.

2. Modify or make additional field samples and mock-ups as required to provide appearance and finishes approved by Architect.

3. Approved field samples and mock-ups may be used in Work upon approval.

1.8 QUALITY CONTROL SUBMITTALS

A. All Quality Control Documents shall be submitted through Procore.

B. Design Data: N/A.

C. Test Reports: Original electronic copy will be marked with Architect's review comments and returned to Contractor.

1. Indicate that material or product conforms to or exceeds specified requirements.

2. Reports may be from recent or previous tests on material or product, but must be acceptable to Architect. Comply with requirements of each individual specification Section.

D. Certificates: Original electronic copy will be marked with Architect's review comments and returned to Contractor.

1. Indicate that material or product conforms to or exceeds specified requirements.

2. Submit supporting reference data, affidavits, and certifications as appropriate.

3. Certificates may be recent or from previous test results on material or product, but must be acceptable to Architect.

E. Manufacturers' Instructions: Original electronic copy will be marked with Architect's review comments and returned to Contractor.

1. Include manufacturer's printed instructions for delivery, storage, assembly, installation, startup, adjusting, and finishing.

2. Identify conflicts between manufacturer's instructions and Contract Documents.

1.9 OPERATIONS AND MAINTENANCE MANUALS

A. Submit electronic copies of manufacturers' operations and maintenance manuals. If necessary, original electronic copy will be marked with Architect's review comments and returned to Contractor for correction until satisfactory information is provided. The City of Morgan Hill will retain satisfactorily corrected manuals for its own use.

B. Submit all Manuals through Procore.

C. Operations and maintenance manuals shall include the following as appropriate:

1. Operating instructions.

2. Preventive maintenance instructions.

3. Cleaning instructions.

4. Safety precautions.

5. Trouble shooting procedures.

6. Theory of operation to discrete component level.

7. Schematic diagrams, flow diagrams, wiring diagrams, logic diagrams, and so on, to discrete component level.

8. Parts lists showing all discrete components with part number, current prices and availability.

9. List of replaceable supplies; paper, ink, ribbon, etc. with part numbers, current prices and availability.

10. Recommended levels of spare parts and supplies to keep on hand.

11. Manufacturers' service and maintenance technical manuals.

12. Names, addresses and telephone numbers of service and repair firms for the equipment.

D. Manuals shall be the same as are used by manufacturers' authorized technicians to completely service and repair the equipment.

1.10 PROJECT RECORD DOCUMENTS

A. Submit one copy of each of the Project Record Documents listed in Section 017700 - Contract Closeout Procedures.

1.11 DELAY OF SUBMITTALS

A. Delay of submittals by Contractor is considered avoidable delay. Liquidated damages incurred because of late submittals will be assessed to Contractor.

**2.0 PRODUCTS**

A. Not applicable to this Section.

**3.0 EXECUTION**

A. Not applicable to this Section.

**END OF SECTION**

# SECTION 015639 – TEMPORARY TREE AND PLANT PROTECTION

## 1.0 GENERAL

### 1.1 SUMMARY

A. This Section includes all labor, materials, equipment, operations, or methods listed, mentioned or scheduled on the Drawings and/or herein specified, including all incidentals necessary and required for completion of work under this Section.

B. Provide the following services:

1. Tree protection
2. Tree identification
3. Trimming tree limbs and branches
4. Root pruning
5. Raising fringe of trees
6. Grading around trees
7. Incidental extra work
8. Debris removal
9. Protective chain-link fence relocation or removal

### 1.2 RELATED SECTIONS

A. Documents affecting work of this Section include, but are not necessarily limited to, General Conditions, Special Conditions and Division 1 of these Contract Documents.

B. Division 31 - Earthwork

C. Division 32 - Exterior Improvements

### 1.3 QUALITY ASSURANCE

A. Standards of workmanship shall conform to those recommended by:

1. American National Standards Institute (ANSI), Section 133.1, "Tree Trimming and Removal."

2. International Society of Arboriculture (ISA)

3. National Arborist Association

1.3 PROJECT CONDITIONS

A. Visit Project site and determine conditions under which work will be performed.

B. Do not begin work until meeting with the City of Morgan Hill's Representative on the Project site to confirm tree locations and work to be performed.

C. Protection: Provide adequate protection of existing trees against damage from construction operations.

1. Install barricades for all trees, a 6 foot high chain-link fence. Locate fence at or beyond tree drip lines (outside edge of tree branching).

2. Especially protect roots, trunk, and foliage of existing trees.

3. Do not permit the following:

a. Using trees as support posts, power poles, sign posts, or anchorage for ropes, guy wires and power lines or other similar functions.

b. Poisoning items by disposing of paint, petroleum products, dirty water or other deleterious materials on or around trees.

c. Compaction of tree root area by moving trucks, grading, machines, storage of equipment, gravel, earthfill, supplies, etc.; within the tree drip line (outside edge of tree branching).

d. Damage to trunk or limbs caused by maneuvering vehicles or stacking material and equipment too close to them.

D. Compensation for planting loss: Any tree to remain that is damaged or destroyed due to the Contractor's negligence or failure to provide adequate protection shall be compensated for in accordance with the following schedule of values, using "tree-caliper" method (greatest trunk diameter measured 30-inches above ground):

1. For trees or shrubs with diameters up to and including 6 inches, actual cost of replacement with items similar in species, size and shape, including:

a. Actual cost of item boxed out of ground.

b. Transportation or delivery of boxed item to the Project site.

c. Planting and staking.

d. Maintenance in watering, fertilizing, pruning, pest control and other care to bring replacement to same general conditions as original item.

2. For trunks up to:

| Size (in inches) | $ Amount |
|---|---|
| 7 | 1,200.00 |
| 8 | 1,700.00 |
| 9 | 2,200.00 |
| 10 | 2,600.00 |
| 11 | 3,100.00 |
| 12 | 3,600.00 |
| 13 | 4,100.00 |
| 14 | 4,600.00 |
| 15 | 5,000.00 |
| 16 | 5,500.00 |
| 17 | 6,000.00 |
| 18 and over, add for each caliper inch: | 600. |

1.4 MATERIALS

A. Tree wound Dressing: Prior to any application, the City of Morgan Hill's Representative shall approve material and application.

B. Protective fencing: 6 foot high galvanized chain link. Refer to Section 323113, Chain Link Fences and Gates.

1.5 TREE IDENTIFICATION

A. Identification of trees to be removed or to remain, that have not been so marked on the drawings, is subject to the City of Morgan Hill's Representative approval.

B. No trees are to be removed without prior approval of the City of Morgan Hill's Representative.

1.6 TRIMMING TREES

A. No limbs are to be removed without prior approval of the City of Morgan Hill's Representative.

B. Notify the City of Morgan Hill's Representative when a tree limb is in conflict with the construction.

C. "Trim" shall be interpreted as follows:

1. Removal of dead branches 1/4 inch and over in diameter.

2. Removal of all dead and live stubs 1/4 inch and over in diameter.

3. Removal of all broken branches, all loose branches and other debris lodged in trees.

4. Removal of undesirable sucker growth.

5. Removal of all live branches which interfere with the tree's structural strength and healthful development. These include:

a. Limbs which rub and abrade a more important branch.

b. Limbs of weak structure which are not important to the frame work of the tree.

c. Limbs with twigs and foliage obstructing development of more important branches.

d. Limbs near the end of limbs which produce more weight than the limb is likely to support.

1.7 ROOT PRUNING

A. Avoid root cutting to prevent disruption of the trees water and nutrient carrying capacity and the natural stability based on balance of radial or sinker root system.

B. Notify the City of Morgan Hill's Representative if root cutting becomes necessary.

C. Avoid tearing or ripping tree roots due to excavation activities.

1. Where root cutting is necessary, no roots are to be cut without prior approval of the City of Morgan Hill's Representative.

2. Where root cutting becomes necessary, all roots are to be clean cut with a saw, lopping shears or proper tree pruning device. Under no circumstance are tree roots to be left splintered or the ends shredded.

1.8 REMOVING TREES

A. No trees are to be removed without prior approval of the City of Morgan Hill's Representative.

B. "Removing Trees" shall be interpreted as removing tree to the ground level and reducing the stump two (2) feet below grade, using a suitable mechanical stump chipper. In order to prevent damage to root systems of remaining adjacent trees, use of a tractor for reduction of stumpage will not be permitted. Trees which are to be removed are indicated on the drawings.

1.9 RAISING SOIL LEVEL

A. Soil placed on the surface around existing trees can create problems involving gaseous exchange in the root zone, crown rot and soil moisture. Soil aeration is a critical factor. Notify the City of Morgan Hill's Representative of any soil work under trees or adjacent to tree drip lines (outer edge of tree branching).

1.10 LOWERING SOIL LEVEL

A. Removing soil from under a tree canopy can seriously damage roots and may even impair the stability of the tree, Notify the City of Morgan Hill's Representative of any soil work under a tree.

1.11 DEBRIS REMOVAL

A. Dispose of all fallen debris present around trees subject to work under this Section. All wood and debris resulting from the Contractor's operations shall become the property of the Contractor and shall be disposed of by the Contractor off the City of Morgan Hill property.

1.12 TREE PROTECTIVE FENCING

A. Provide fencing as indicated on the drawings and as called out for in this Section.

B. Install protective fencing and plywood protection adjacent to tree areas and utilities installation areas prior to commencing work in these locations.

C. Relocation of protective fencing as a sequence of construction, requires no additional cost to the City of Morgan Hill.

**END OF SECTION**

# SECTION 017400 - CONSTRUCTION CLEANING & WASTE MANAGEMENT

## 1.0 GENERAL

### 1.1 SUMMARY

A. This Section includes all labor, materials, equipment, operations, or methods listed, mentioned or scheduled on the plans and/or herein specified, including all incidentals necessary and required for completion of work under this Section.

B. This Section includes the following:

1. Waste Management Goals
2. Waste Management Plans
3. Waste Management Plan Implementation
4. Special Programs

### 1.2 RELATED SECTIONS

A. Documents affecting work of this Section include, but are not necessarily limited to, General Conditions, Special Conditions and Division 1 of these Contract Documents.

B. Section 011000 - Summary of Work

C. Section 013119 - Project Meetings

D. Section 013300 - Submittals

E. Section 017700 - Contract Closeout Procedures

### 1.3 REFERENCES

A. County Of Santa Clara Recycling and Waste Reduction Division

### 1.4 DEFINITIONS

A. Construction and Demolition Waste: Solid wastes such as building materials, packaging and rubble resulting from construction, remodeling, demolition and repair of buildings/facilities, paving and infrastructure.

B. Recyclable Materials: Products and materials that can be recovered and manufactured into new products. Recyclable materials include, but are not limited to, the following:

1. Asphaltic paving
2. Portland cement concrete
3. Brick and masonry
4. Land-clearing debris
5. Native rock and granular fill
6. Wood products
7. Ferrous materials
8. Non-Ferrous metals including copper and aluminum
9. Mechanical and electrical products and equipment
10. Gypsum products
11. Acoustical ceiling tile
12. Cardboard and plastic film
13. Office recycling, including paper, glass, plastic and cans
14. Carpet and padding
15. Oil used for equipment
16. Fluorescent lights and ballasts
17. Batteries

C. Recycling Facility: A business that specializes in collecting, handling, processing, distributing, or remanufacturing waste materials, generated by demolition and new construction projects, into products or materials that can be used for this project or by others.

1. Pacific Coast Recycling, Gilroy or as recommend by Santa Clara County

D. Trash: Product or material unable to be salvaged for resale, salvaged and reused, returned, or recycled.

E. Waste Materials: Product or material that can be salvaged for resale, salvaged and reused, returned to vendors, or recycled.

1.5 PERFORMANCE REQUIREMENT

A. The Contractor shall use all means available to divert at least 75% construction and demolition waste from landfills.

1.6 CONSTRUCTION WASTE MANAGEMENT OPERATIONS

A. Take a proactive, responsible role in management of construction waste and require all subcontractors, vendors and suppliers to participate in the effort. Establish a construction waste management program that includes the following categories:

1. Waste prevention including minimizing packaging waste

2. Salvage and reuse

3. Salvage for resale and donation

4. Recycling

5. Disposal

B. Encourage waste prevention practices as an efficient waste management strategy when sizing, cutting, and installing products and materials. Salvage and reuse is a better waste management method than recycling because little or no reprocessing is necessary; less pollution is created when items are reused in their original form. Therefore a diligent effort shall be made to salvage and reuse product and materials. Waste materials that cannot be salvaged and reused yet have value as recyclables, shall be recycled. Only trash shall be transported to a landfill.

1.7 CONSTRUCTION WASTE MANAGEMENT PLAN

A. Perform a waste analysis to determine the types and quantity of construction waste anticipated and identify salvage for resale, salvage and reuse, recycling, and disposal options available. Within 10 days after contract award and prior to performing any demolition work, submit a Waste Management Plan for review and approval. The Waste Management Plan shall include the following:

1. Waste Materials: A list of waste materials that will be salvaged for resale, salvaged and reused, and recycled. A list to address packaging materials including banding, crates, pallets, plastic film, polystyrene and cardboard (packaging waste consumes 15% of the waste stream).

2. Haulers: Name, address and phone number for each hauler providing service.

3. Facilities: Identification of each recycling facility to be utilized.

4. Separation and Protection: Description of the method to be employed in handling waste materials and description of the method that will be used to protect recycled materials from contamination.

5. Transportation: Description of the means of transportation of waste materials and the destination of the materials.

6. Subcontractor Participation: A description of requirements for subcontractors to adhere to that includes waste prevent measures such as salvage for resale or reuse and recycling for the waste materials generated by each subcontractor's scope of work, including packaging and shipping materials.

7. Meetings: A description of the regular meetings held in which waste management will be addressed. Refer to Section 013119, Project Meetings.

## 2.0 PRODUCTS

Not Used.

## 3.0 EXECUTION

### 3.1 PROGRAM IMPLEMENTATION AND MONITORING

A. Implement and maintain, for the duration of the project, the construction waste management program.

1. Manager: The Contractor shall designate an onsite party (or parties) responsible for instructing workers and overseeing and documenting results of the Waste Management Plan for the Project.

2. Distribution: The Contractor shall distribute copies of the Waste Management Plan to the Contractor, each Subcontractor, the City of Morgan Hill, and Architect.

3. Instruction: The Contractor shall provide onsite instruction of appropriate separating, handling, and recycling, salvage, reuse, and return methods to be used by all parties at the appropriate stages of the project.

4. Separation Facilities: The Contractor shall lay out and label a specific area to facilitate separation of materials for potential recycling, salvage, reuse, and return. Provide a site map that calls out areas identified. Provide the necessary containers and bins to facilitate the waste management program. Recycling and waste bin areas are to be kept neat and clean and clearly marked in order to avoid contamination of materials. Separate construction waste at the project site by one of the following methods:

   a. Source Separated Method: Waste products and materials that are recyclable are separated from trash and sorted into appropriately marked separate containers and then transported to the respective recycling facility for further processing. Trash is transported to a landfill.

   b. Co-Mingled Method: Selected waste materials are placed into a single container and then transported to a recycling facility where the recyclable materials are sorted and processed and the remaining trash and waste materials are handled separately.

   c. Other methods proposed by the Contractor and approved by the Contracting Officer.

**END OF SECTION**

# SECTION 017700 - CONTRACT CLOSEOUT PROCEDURES

## 1.0 GENERAL

### 1.1 SUMMARY

A. This Section includes all labor, materials, equipment, operations, or methods listed, mentioned or scheduled on the plans and/or herein specified, including all incidentals necessary and required for completion of work under this Section.

B. This Section describes contract closeout procedures including:

1. Removal of temporary construction facilities.
2. Substantial completion.
3. Final completion.
4. Final cleaning.
5. Project record documents.
6. Material, equipment and finish data.
7. Project guarantee
8. Warranties
9. Turn-in.
10. Release of claims.
11. Guaranty and Maintenance Bonds

### 1.2 RELATED SECTIONS

A. Documents affecting work of this Section include, but are not necessarily limited to, General Conditions, Special Conditions and Division 1 of these Contract Documents.

### 1.3 REMOVAL OF TEMPORARY CONSTRUCTION FACILITIES

A. Remove temporary materials, equipment, services, and construction prior to Substantial Completion Inspection.

B. Clean and repair damage caused by installation or use of temporary facilities.

C. Restore permanent facilities used during construction to specified condition.

1.4 SUBSTANTIAL COMPLETION

A. When Contractor considers Work or designated portion thereof is substantially complete, submit written notice, with list of items to be completed or corrected.

B. Within reasonable time, Architect will inspect to determine status of completion.

C. Should Architect determine that Work is not substantially complete, Architect will promptly notify Contractor in writing, listing all defects and omissions.

D. Remedy deficiencies and send a second written notice of substantial completion. Architect will re-inspect the Work.

E. When Architect determines that Work is substantially complete, Architect will issue a Certificate of Substantial Completion.

F. Manufactured units, equipment and systems which require startup must have been started up and run for periods prescribed by Architect before a Certificate of Substantial Completion will be issued.

1.5 FINAL COMPLETION

A. When Contractor considers Work is complete, submit written certification that:

1. Contractor has inspected Work for compliance with Contract Documents.

2. Work, except for Contractor maintenance after Final Acceptance, has been completed in accordance with Contract Documents and deficiencies listed with Certificate of Substantial

3. Completion has been corrected.

4. Work is complete and ready for final inspection.

B. In addition to submittals required by conditions of Contract, provide submittals required by governing authorities and submit final statement of accounting giving total adjusted Contract Sum, previous payments, and sum remaining due.

C. When Architect finds Work is acceptable and final submittal is complete, Architect will issue final change order reflecting approved adjustments to Contract Sum not previously made by Change Order.

1.6 FINAL CLEANING

A. Execute final cleaning prior to final inspection.

B. Clean interior and exterior surfaces exposed to view; remove temporary labels, stains and foreign substances, polish transparent and glossy surfaces, vacuum carpeted and soft surfaces.

1. Clean equipment and fixtures to a sanitary condition, clean or replace filters of mechanical equipment operated during construction, clean ducts, blowers and coils of units operated without filters during construction.

2. Employ skilled workers for final cleaning.

C. Clean Site; mechanically sweep paved areas.

D. Remove waste and surplus materials, rubbish, and construction facilities from Site.

1.7 PROJECT GUARANTEE

A. Requirements for Contractor's guarantee of completed Work are included in Warranty from General Conditions of the Contract for Construction. Contractor shall guarantee Work done under Contract against failures, leaks or breaks or other unsatisfactory conditions due to defective equipment, materials or workmanship, and perform repair work or replacement required, at Contractor's sole expense, for period of [1] year from date of Final Acceptance.

B. Neither recordation of final acceptance nor final certificate for payment nor provision of the Contract nor partial or entire use or occupancy of premises by the City of Morgan Hill shall constitute acceptance of Work not done in accordance with Contract Documents nor relieve Contractor of liability in respect to express warranties or responsibility for faulty materials or workmanship.

C. The City of Morgan Hill may make repairs to defective Work as set forth in Warranty from General Conditions of the Contract for Construction, if, within 5 working days after mailing of written notice of defective work to Contractor or authorized agent, Contractor shall neglect to make or undertake with due diligence repairs; provided, however, that in case of leak or emergency where, in opinion of the City of Morgan Hill, delay would cause hazard to health or serious loss or damage, repairs may be made without notice being sent to Contractor, and Contractor shall pay cost thereof.

D. If, after installation, operation or use of materials or equipment to be furnished under Contract proves to be unsatisfactory to Architect, the City of Morgan Hill shall have right to operate and use materials or equipment until it can, without damage to the City of Morgan Hill, be taken out of service for correction or replacement. Period of use of defective materials or equipment pending correction

or replacement shall in no way decrease guarantee period required for acceptable corrected or replaced items of materials or equipment.

E. Nothing in this Section shall be construed to limit, relieve or release Contractor's, subcontractors' and equipment suppliers' liability to the City of Morgan Hill for damages sustained as result of latent defects in equipment caused by negligence of suppliers' agents, employees or subcontractors. Stated in another manner, warranty contained in the Contract Documents shall not amount to, nor shall it be deemed to be, waiver by the City of Morgan Hill of any rights or remedies (or time limits in which to enforce such rights or remedies) it may have for defective workmanship or defective materials under laws of this State pertaining to acts of negligence.

1.8 WARRANTIES AND BONDS

A. Execute Contractor's submittals and assemble documents executed by subcontractors, suppliers, and manufacturers.

1. Provide table of contents and assemble in a single electronic file.

2. Assemble in Specification Section order.

3. Submit through Procore.

B. Submit material prior to final application for payment.

1. For equipment put into use with the City of Morgan Hill's permission during construction, submit within ten (10) working days after first operation.

2. For items of Work delayed materially beyond Date of Substantial Completion, provide updated submittal within ten (10) working days after acceptance, listing date of acceptance as start of warranty period.

C. Warranties are intended to protect the City of Morgan Hill against failure of work and against deficient, defective and faulty materials and workmanship, regardless of sources.

D. Limitations: Warranties are not intended to cover failures which result from the following:

1. Unusual or abnormal phenomena of the elements.

2. Vandalism after substantial completion.

3. Insurrection or acts of aggression including war.

E. Related Damages and Losses: Remove and replace Work which is damaged as result of defective Work, or which must be removed and replaced to provide access for correction of warranted Work.

F. Warranty Reinstatement: After correction of warranted Work, reinstate warranty for corrected Work to date of original warranty expiration or to a date not less than 365 days after corrected Work was done, whichever is later.

G. Replacement Cost: Replace or restore failing warranted items without regard to anticipated useful service lives.

H. Warranty Forms: Submit drafts to Architect for approval prior to execution. Forms shall not detract from or confuse requirements or interpretations of Contract Documents.

1. Warranty shall be countersigned by manufacturers.

2. Where specified, warranty shall be countersigned by subcontractors and installers.

I. Rejection of Warranties: the City of Morgan Hill reserves right to reject unsolicited and coincidental product warranties which detract from or confuse requirements or interpretations of Contract Documents.

J. Term of Warranties: For materials, equipment, systems and workmanship warranty period shall be two (2) years minimum from date of substantial completion of entire Work except where:

1. Detailed specifications for certain materials, equipment or systems require longer warranty periods.

2. Materials, equipment or systems are put into beneficial use the City of Morgan Hill prior to Substantial Completion as agreed to in writing by Architect.

K. Warranty of Title: No material, supplies, or equipment for Work under Contract shall be purchased subject to any chattel mortgage, security agreement, or under a conditional sale or other agreement by which an interest therein or any part thereof is retained by seller or supplier. Contractor warrants good title to all material, supplies, and equipment installed or incorporated in Work and agrees upon completion of all work to deliver premises, together with improvements and appurtenances constructed or placed thereon by Contractor, to the City of Morgan Hill free from any claim, liens, security interest, or charges, and further agrees that neither Contractor nor any person, firm, or corporation furnishing any materials or labor for any Work covered by Contract shall have right to lien upon premises or improvement or appurtenances thereon. Nothing contained in this

Paragraph, however, shall defeat or impair right of persons furnishing materials or labor under bond given by Contractor for their protection or any rights under law permitting persons to look to funds due Contractor in hands of the City of Morgan Hill.

1.9 TURN-IN

A. Contract will not be closed out and final payment will not be made until all personnel Identification Media, vehicle permits and keys issued to Contractor during prosecution of Work are turned in to Morgan Hill Centennial Recreation Center Expansion.

**2.0 PRODUCTS**

A. Not applicable to this Section.

**3.0 EXECUTION**

A. Not applicable to this Section.

**END OF SECTION**

# SECTION 018119 – CONSTRUCTION INDOOR AIR QUALITY MANAGEMENT

## 1.0 GENERAL

### 1.1 SUMMARY

A. This Section includes all labor, materials, equipment, operations, or methods listed, mentioned or scheduled on the plans and/or herein specified, including all incidentals necessary and required for completion of work under this Section.

B. This Section includes procedures for achieving an environmentally conscious Work Product. The Contractor shall:

1. Prepare a Construction Indoor Air Quality Management Plan (IAQ) in accordance with this Section (refer to parts 1.2 and 1.3 below).

2. Adhere to the methods and procedures outlined in the Construction IAQ during construction and closeout.

3. Document compliance with the Construction IAQ during construction.

4. Submit certification to the County at closeout demonstrating compliance with the Construction IAQ requirements.

### 1.2 RELATED SECTIONS

A. Documents affecting work of this Section include, but are not necessarily limited to, General Conditions, Special Conditions and Division 1 of these Contract Documents.

### 1.3 SPECIAL SUBMITTAL REQUIREMENTS

A. Construction Indoor Air Quality Management Plan (IAQ): Not less than 21 days prior to installation of HVAC ductwork or equipment, or application of coatings, sealants and/or finishes inside the enclosed building shell.

B. Revise and resubmit IAQ as required by the City of Morgan Hill or Architect.

1. Approval of the Contractor's Environmental Procedures Compliance plans will not relieve the Contractor of responsibility for adequate and continuing control of pollutants and other environmental protection measures required by Federal, state, county or local agencies.

1.4 PROVIDE A CONSTRUCTION IAQ MANAGEMENT PLAN THAT INCLUDES:

A. Procedures for meeting the applicable SMACNA (Sheet Metal and Air Conditioning National Design/Builders Association) Construction IAQ requirements.

B. Procedures for protection and remediation plans for damaged absorptive materials.

C. Training sessions for all contractors and subcontractors that they understand and agree to comply with the Construction IAQ Management Plan requirements.

1. Schedule and sequence of events for HVAC system installation/startup, application of interior coatings and finishes, and installation of building furnishings.

**2.0 PRODUCTS**

A. Not Applicable to this Section.

**3.0 EXECUTION**

3.1 DURING CONSTRUCTION THE CONTRACTOR SHALL:

A. Meet or exceed the applicable minimum requirements of the current SMACNA and the IAQ Guidelines for Occupied Buildings Under Construction, Chapter 3, for the items listed below which the contractor shall supply during construction:

1. HVAC Protection:

a. Protect all air handling and distribution equipment, and air supply and return ducting during construction.

b. Adequately cover and protect all exposed air inlet and outlet openings, grilles, ducts, plenums, etc., to prevent water, moisture, dust, and other contaminant intrusion.

c. Apply protection immediately after installation of equipment and ducting.

d. Ducting runs that require more than a single day to install shall be protected at the end of each day's Work.

2. Source Control:

   a. Protect stored onsite or installed absorptive or porous materials including, but not limited to, batt insulation, drywall, and carpeting from exposure to moisture.

   b. Do not use moisture-damaged porous materials in the building.

   c. Provide adequate ventilation of packaged dry products prior to installation to allow for gassing of volatile organic compounds (VOCs). Remove from packaging and ventilate in a a secure, dry, well-ventilated space free from strong contaminant sources and residues. Provide a temperature range of 60 degrees F minimum to 90 degrees F maximum continuously during the ventilation period. Do not ventilate within limits of Work unless otherwise approved by the Architect.

3. Housekeeping:

   a. Minimize accumulation of dust fumes, vapors, or gases in the building.

   b. Suppress dust with wetting agents or a sweeping compound.

   c. Clean up dust using a wet rag or damp mop.

   d. Increase the cleaning frequency when dust buildup is noted.

   e. Remove spills or excess applications of solvent-containing products as soon as possible.

   f. Remove accumulated water and keep work areas as dry as possible.

   g. Vacuum using HEPA-filtered vacuum cleaners.

   h. Store volatile liquids, including fuels and solvents, in closed containers and outside of the building when not in use.

   i. Keep volatile liquid containers closed when the container is inside of the building and not in use.

4. Scheduling:

a. Develop schedule for application of interior finishes including time frames for the application of wet materials onto dry materials, dry materials onto wet materials, and expected curing times for applied wet materials.

b. Schedule application of wet material floor coverings, wall coverings, and other porous finish materials after activation of building HVAC and exhaust systems.

c. Wet materials include all paints, adhesives, sealants, coatings, finishes and spray-applied materials.

d. Insure that all wet applied interior finish materials are properly and fully cured before installing other finish materials over them.

e. Install carpets and furnishings after all other interior finish materials have been applied and fully cured.

f. Provide sufficient ventilation, air circulation and air changes to properly cure materials. Run HVAC system and exhaust fans 24 hours per day during this period. Return air dampers shall be closed to provide 100% fresh air intake. Temperatures shall be maintained at approximately 75 degrees F (verify specific recommended temperature settings with coating and finish manufacturer's product data).

g. Provide sufficient ventilation, air circulation and air changes to dissipate excess humidity when present. Relative humidity shall not be allowed to exceed 40%.

B. Use nontoxic cleaning materials and procedures to avoid the release of toxic fumes and VOCs into finished spaces within the building.

C. Replace all filtration media immediately prior to occupancy.

1. Filtration media shall have a Minimum Efficiency Reporting Valve (MERV) of 13, as determined by ASHRAE 52.2-2007 for media installed at the end of construction.

2. Provide cut sheets of filtration media used during construction and installed prior to occupancy with MERV highlighted.

3. Provide a letter declaring that all filtration media was replaced prior to occupancy.

D. During construction provide photographs of Construction IAQ management measures such as protection of ducts and onsite stored or installed absorptive materials to document compliance with the Construction IAQ management plan.

**END OF SECTION**

# Division 2:
# Existing Conditions

# SECTION 024119 - SELECTIVE STRUCTURE DEMOLITION

## 1.0 GENERAL

### 1.1 SUMMARY

A. This Section includes all labor, materials, equipment, operations, or methods listed, mentioned or scheduled on the plans and/or herein specified, including all incidentals necessary and required for completion of work under this Section.

B. Related Documents:

1. The following applies to this section:

a. General provisions of the Contract, including General and Supplementary Conditions.

b. The Drawings.

c. Division 01 Specification Sections and related requirements in other sections of the Project Manual.

d. Related requirements in other Contract Documents listed in the Agreement.

2. Review these documents for coordination with additional requirements and information that apply to work under this Section.

C. Section Includes:

1. Demolition and removal of selected portions of building.

### 1.2 RELATED SECTIONS

A. Documents affecting work of this Section include, but are not necessarily limited to, General Conditions, Special Conditions and Division 1 of these Contract Documents.

B. Section 011000 - Summary of Work, for use of premises, and phasing, and Owner-occupancy requirements.

C. Section 017400 - Construction Cleaning and Waste Management, for disposal of demolished materials.

### 1.3 DEFINITIONS

A. Remove:

1. Detach items from existing construction and legally dispose of them off-site, unless indicated to be removed and salvaged or removed and reinstalled.

B. Remove and Salvage:

1. Detach items from existing construction and deliver them to Owner ready for reuse.

C. Remove and Reinstall:

1. Detach items from existing construction, prepare them for reuse, and reinstall them where indicated.

D. Existing to Remain:

1. Existing items of construction that are not to be removed and that are not otherwise indicated to be removed, removed and salvaged, or removed and reinstalled.

1.4 SUBMITTALS

A. Qualification Data:

1. For demolition firm.

B. Schedule of Selective Demolition Activities:

1. Indicate the following:

a. Detailed sequence of selective demolition and removal work, with starting and ending dates for each activity.

b. Interruption of utility services. Indicate how long utility services will be interrupted.

c. Coordination for shutoff, capping, and continuation of utility services.

C. Inventory:

1. After selective demolition is complete, submit a list of items that have been removed and salvaged, if any.

D. Landfill Records:

1. Comply with submittal requirements in Division 01 Section "Demolition Waste Management and Disposal."

1.5 QUALITY ASSURANCE

A. Demolition Firm Qualifications:

1. An experienced firm that has specialized in demolition work similar in material and extent to that indicated for this Project.

B. Refrigerant Recovery Technician Qualifications:

1. Certified by an EPA-Approved Certification Program.

C. Regulatory Requirements:

1. Comply with governing EPA notification regulations before beginning selective demolition. Comply with hauling and disposal regulations of authorities having jurisdiction.

2. Coordinate with the City's Environmental Consultant regarding regulatory requirements for handling and disposal of hazardous waste.

D. Standards:

1. Comply with ANSI A10.6, NFPA 241 and CBC/CFC chapter 33.

E. Pre-demolition Conference:

1. Conduct conference at Project site to comply with requirements in Division 01 Section "Project Management and Coordination." Review methods and procedures related to selective demolition including, but not limited to, the following:

a. Inspect and discuss condition of construction to be selectively demolished.

b. Review structural load limitations of existing structure.

c. Review and finalize selective demolition schedule and verify availability of materials, demolition personnel, equipment, and facilities needed to make progress and avoid delays.

d. Review requirements of work performed by other trades that rely on substrates exposed by selective demolition operations.

e. Review areas where existing construction is to remain and requires protection.

## 1.6 PROJECT CONDITIONS

A. General:

1. Comply with requirements specified in Division 01 Section "Summary."

2. Conditions existing at time of inspection for bidding purpose will be maintained by Owner as far as practical.

3. Take adequate measures to reduce noise, duct and debris production. Refer to city ordinance.

4. Notify Architect of discrepancies between existing conditions and Drawings before proceeding with selective demolition.

B. Remove Items Handling:

1. Storage or sale of removed items or materials on-site is not permitted.

C. Utility Service:

1. Coordinate shut-down of utilities with Owner's Representative.

1.7 WARRANTY

A. Existing Warranties:

1. Remove, replace, patch, and repair materials and surfaces cut or damaged during selective demolition, by methods and with materials so as not to void existing warranties, if any.

**2.0 PRODUCTS – NOT USED**

**3.0 EXECUTION**

3.1 EXAMINATION

A. General:

1. Verify that utilities have been disconnected and capped.

2. Survey existing conditions and correlate with requirements indicated to determine extent of selective demolition required.
3. Inventory and record the condition of items to be removed and reinstalled and items to be removed and salvaged.

4. When unanticipated mechanical, electrical, or structural elements that conflict with intended function or design are encountered, investigate and measure the nature and extent of conflict. Promptly submit a written report to Architect.

3.2 UTILITY SERVICES AND MECHANICAL/ELECTRICAL SYSTEMS

A. See Division 02 Section "Selective Demolition of Utility Services."

3.3 PREPARATION

A. Site Access and Temporary Controls:

1. Conduct selective demolition and debris-removal operations to ensure minimum interference with roads, streets, walks, walkways, and other adjacent occupied and used facilities.

2. Comply with requirements for access and protection specified in Division 01 Section "Temporary Facilities and Controls."

B. Temporary Facilities:

1. Provide temporary barricades and other protection required to prevent injury to people and damage to adjacent buildings and facilities to remain.

2. Provide protection to ensure safe passage of people around selective demolition area.

3. Provide temporary weather protection, during interval between selective demolition of existing construction on exterior surfaces and new construction, to prevent water leakage and damage to structure and interior areas.

4. Protect walls, ceilings, floors, and other existing finish work that are to remain or that are exposed during selective demolition operations.

5. Cover and protect furniture, furnishings, and equipment that have not been removed.

6. Comply with requirements for temporary enclosures, dust control, heating, and cooling specified in Division 01 Section "Temporary Facilities and Controls."

C. Temporary Shoring:

1. Provide and maintain shoring, bracing, and structural supports as required to preserve stability and prevent movement, settlement, or collapse of construction and finishes to remain, and to prevent unexpected or uncontrolled movement or collapse of construction being demolished.

2. Strengthen or add new supports when required during progress of selective demolition.

## 3.4 SELECTIVE DEMOLITION, GENERAL

A. General:

1. Demolish and remove existing construction only to the extent required by new construction and as indicated. Use methods required to complete the Work within limitations of governing regulations and as follows:

a. Proceed with selective demolition systematically, from higher to lower level. Complete selective demolition operations above each floor or tier before disturbing supporting members on the next lower level.

b. Neatly cut openings and holes plumb, square, and true to dimensions required. Use cutting methods least likely to damage construction to remain or adjoining construction. Use hand tools or small power tools designed for sawing or grinding, not hammering and chopping, to minimize disturbance of adjacent surfaces. Temporarily cover openings to remain.

c. Cut or drill from the exposed or finished side into concealed surfaces to avoid marring existing finished surfaces.

d. Do not use cutting torches until work area is cleared of flammable materials. At concealed spaces, such as duct and pipe interiors, verify condition and contents of hidden space before starting flame-cutting operations. Maintain fire watch and portable fire-suppression devices during flame-cutting operations.

e. Maintain adequate ventilation when using cutting torches.

f. Remove decayed, vermin-infested, or otherwise dangerous or unsuitable materials and promptly dispose of off-site.

g. Remove structural framing members and lower to ground by method suitable to avoid free fall and to prevent ground impact or dust generation.

h. Locate selective demolition equipment and remove debris and materials so as not to impose excessive loads on supporting walls, floors, or framing.

i. Dispose of demolished items and materials promptly. Comply with requirements in Division 01 Section "Construction Cleaning and Waste Management."

B. Removed and Salvaged Items:

1. When Items are indicated on the Drawings to be removed and salvaged, proceed as follows:

a. Clean salvaged items.

b. Pack or crate items after cleaning. Identify contents of containers.

c. Store items in a secure area until delivery to Owner.

d. Transport items to Owner's storage area designated by Owner.

e. Protect items from damage during transport and storage.

C. Removed and Reinstalled Items:

1. Clean and repair items to functional condition adequate for intended reuse. Paint equipment to match new equipment.

2. Pack or crate items after cleaning and repairing. Identify contents of containers.

3. Protect items from damage during transport and storage.

4. Reinstall items in locations indicated. Comply with installation requirements for new materials and equipment. Provide connections, supports, and miscellaneous materials necessary to make item functional for use indicated.

D. Existing Items to Remain:

1. Protect construction indicated to remain against damage and soiling during selective demolition. When permitted by Architect, items may be removed to a suitable, protected storage location during selective demolition and cleaned and reinstalled in their original locations after selective demolition operations are complete.

3.5 SELECTIVE DEMOLITION PROCEDURES FOR SPECIFIC MATERIALS

A. Concrete:

1. Demolish in sections. Cut concrete full depth at junctures with construction to remain and at regular intervals, using power-driven saw, then remove concrete between saw cuts.

B. Concrete Slabs-on-Grade:

1. Saw-cut perimeter of area to be demolished, then break up and remove.

C. Resilient Floor Coverings:

1. Remove floor coverings and adhesive.

a. Remove residual adhesive and prepare substrate for new floor coverings by one of the methods recommended by the Abatement Work Plan.

b. Remove identified hazardous floorcovering materials in accordance with Standard Procedures identified in the Abatement Work Plan.

D. Air-Conditioning Equipment:

1. Remove equipment without releasing refrigerants.

2. For additional requirements, see Division 02 Section "Selective Demolition of Utility Services."

E. Hazardous Materials:

1. Contractor to coordinate with District to ensure that all abatement work has been completed prior to beginning of Project.

2. It is the responsibility of the Contractor to walk through the Project and contact the Abatement Contractor to confirm that all necessary abatement has occurred and the Project is ready for the next phase of work.

3.6 DISPOSAL OF DEMOLISHED MATERIALS

A. General:

1. Except for items or materials indicated to be recycled, reused, salvaged, reinstalled, or otherwise indicated to remain Owner's property, remove demolished materials from Project site and legally dispose of them in an EPA-approved landfill.

2. Do not allow demolished materials to accumulate on-site.

3. Remove and transport debris in a manner that will prevent spillage on adjacent surfaces and areas.

a. Comply with requirements specified in Division 01 Section "Demolition Waste Management and Disposal."

B. Burning:

1. Do not burn demolished materials.

C. Disposal:

1. Transport demolished materials off Owner's property and legally dispose of them.

3.7 CLEAN UP

A. General:

1. Clean adjacent structures and improvements of dust, dirt, and debris caused by selective demolition operations. Return adjacent areas to condition existing before selective demolition operations began.

3.8 SELECTIVE DEMOLITION SCHEDULE

A. Refer to Drawings.

**END OF SECTION**

# Division 3:
# Concrete

# SECTION 033600 - SPECIAL CONCRETE FLOOR FINISHES

## 1.0 GENERAL

### 1.1 SUMMARY

A. This section includes the following.

1. Applying Sealer and Hardener, and polishing concrete to specified finish level.

B. Related Work:

1. Section 03300 Cast-In-Place Concrete

2. Section 09639 Concrete Hardening/Sealing

### 1.2 REFERENCES

A. American Society for Testing and Materials:

1. ASTM-C779, Standard Test Method for Abrasion Resistance of Horizontal Concrete Surfaces

2. ASTM G23-81, Ultraviolet Light & Water Spray

3. ASTM C805, Impact Strength

B. American Concrete Institute

1. ACI 302. 1R-89, Guide for Concrete Floor and Slab Construction

C. Other Test:

1. Reflectivity

### 1.3 SUBMITTALS

A. Comply with pertinent provisions of Section 01600- Product Requirements.

1. Provide submittal information within 35 calendar days after the contractor has received the owner's notice to proceed.

B. Product data:

1. Submit special concrete finishes manufacturer's specifications and test data.

2. Submit special concrete finishes describing product to be provided, giving manufacturer's name and product name for the specified material proposed to be provided under this section.

3. Submit special concrete finishes manufacturer's recommended installation procedures; which when approved by the Architect, will become the basis for accepting or rejecting actual installation procedures used on the work.

4. Submit special concrete finishes technical data sheet giving descriptive data, curing time, and application requirements.

5. Submit special concrete finishes manufacturer's Material Safety Data Sheet (MSDS) and other safety requirements.

6. Follow all special concrete finishes published manufacturer's installation instructions.

C. Test Reports:

1. Provide certified test reports, prepared by an independent testing laboratory, confirming compliance with specified performance criteria.

1.4 QUALITY ASSURANCE

A. Installer Qualifications:

1. Use an experienced installer and adequate number of skilled workmen who are thoroughly trained and experienced in the necessary craft.

2. The special concrete finish manufacturer shall certify applicator.

3. Applicator shall be familiar with the specified requirements and the methods needed for proper performance of work of this section.

B. Manufacturer's Certification:

1. Provide letter of certification from concrete finish manufacturer stating that installer is certified applicator of special concrete finishes, and is familiar with proper procedures and installation requirements required by the manufacturer.

C. Mock-ups:

1. Apply mock-ups of each type finish, to demonstrate typical joints, surface finish, color variation (if any), and standard of workmanship.

    a. Build mock-ups approximately 50 square feet in the location indicated or if not indicated, as directed by the Architect or Owner Representative.

    b. Notify Architect or Owner Representative seven days in advance of dates and times when mock-ups will be constructed.

    c. Obtain from the Architect or Owner Representative approval of mock-ups before starting construction.

    d. If the Architect or Owner Representative determines that mock-ups do not meet requirements, demolish and remove them from the site and cast others until mock-ups are approved.

    e. Maintain mock-ups during construction in an undisturbed condition as a standard for judging the completed work.

    f. Approved mock-ups may become part of the completed work if undisturbed at time of substantial completion.

D. Protection

1. No satisfactory chemical or cleaning procedure is available to remove petroleum stains from the concrete surface. Prevention is therefore essential.

    a. All hydraulic powered equipment must be diapered to avoid staining of the concrete.

    b. No trade will park vehicles on the inside slab. If necessary to complete their scope of work, drop cloths will be placed under vehicles at all times.

    c. No pipe cutting machine will be used on the inside floor slab.

    d. Steel will not be placed on interior slab to avoid rust staining.

    e. Acids and acidic detergents will not come into contact with slab.

    f. All trades informed that the slab must be protected at all times.

E. Pre-Installation Conference:

1. Conduct conference at project site to comply with requirements in Division 1 Section " Project Management and Coordination"

1.5 DELIVERY, STORAGE AND HANDLING

A. Deliver materials in original containers, with seal's unbroken, bearing manufacturer labels indicating brand name and directions for storage.

B. Dispense special concrete finish material from factory numbered and sealed containers. Maintain record of container numbers.

1.6 PROJECT CONDITIONS

A. Environmental limitations:

1. Comply with manufacturers written instructions for substrate temperature and moisture content, ambient temperature and humidity, ventilation, and other conditions affecting topping performance.

a. Concrete Floor Flatness rating recommended at least 40, where possible.

b. Concrete Floor Levelness rating recommended at least 30, where possible.

c. Concrete must be cured a minimum of 45 days or as directed by the manufacturer before application of Retro Plate can begin.

d. Application of Retro-Plate shall take place 10 days prior to installation of equipment and substantial completion, thus providing a complete, uninhibited concrete slab for application.

B. Close areas to traffic during floor application and after application, for time period recommended in writing by manufacturer.

**2.0 PRODUCTS**

2.1 MATERIALS AND MANUFACTURERS

A. HARDENING/SEALING AGENT

1. Retro-Plate 99, manufactured by Advanced Floor Products, Inc., P.O. Box 50533, Provo, Utah 84605, 801-812-3420.

a. Performance Criteria:

1) Abrasion Resistance: ASTM C779 – Up to 400% increase in abrasion resistance.

2) Impact Strength: ASTM C805 – Up to 21% increase impact strength.

3) Ultra Violet Light and Water Spray: ASTM G23-81 – No adverse effect to ultra violet and water spray.

4) Reflectivity: Up to 30% increase in reflectivity.

2. Certified Applicators

3. Manufacturer's Regional Representative

2.2 RELATED MATERIALS

A. Neutralizing Agent:

1. Tri-sodium Phosphate

B. Water:

1. Potable

**3.0 EXECUTION**

3.1 SURFACE CONDITIONS:

A. Examine substrate, with installer present, for conditions affecting performance of finish. Correct conditions detrimental to timely and proper work. Do not proceed until unsatisfactory conditions are corrected.

B. Verify that base slab meet finish and surface profile requirements in Division 3 Section "Cast-In-Place Concrete," and Project Conditions above.

C. Prior to application, verify that floor surfaces are free of construction latents.

3.2 APPLICATION

A. Start any of the floor finish applications in presence of manufacturer's technical representative.

B. Sealing, Hardening and Polishing of Concrete Surface

1. Concrete must be in place a minimum of 45 days or as directed by the manufacturer before application can begin.

2. Application is to take place at least 10 days prior to racking and other in-store accessory installation, thus providing a complete, uninhibited concrete slab for application.

3. Applicable procedures must be followed as recommended by the product manufacturer and as required to match approved test sample.

4. Achieve waterproofing, hardening, dust-proofing, and abrasion resistance of the surface without changing the natural appearance of the concrete, except for the sheen.

5. Polish to required sheen level.

3.3 WORKMANSHIP AND CLEANING:

A. The premises shall be kept clean and free of debris at all times.

B. Remove spatter from adjoining surfaces, as necessary.

C. Repair damages to surface caused by cleaning operations.

D. Remove debris from jobsite

1. Dispose of materials in separate, closed containers in accordance with local regulations.

3.4 PROTECTION:

A. Protect finished work until fully cured in accordance with manufacturer's recommendations.

**END OF SECTION**

# SECTION 033923 – MEMBRANE CONCRETE CURING

## PART 1 GENERAL

### 1.01 SECTION INCLUDES

A. Surface preparation.

B. Application of resin-based, water-based concrete curing compound.

### 1.02 RELATED SECTIONS

A. Division 3 - See drawings
B. Section 096500 – Resilient Flooring
C. Section 096566 – Resilient Athletic Flooring
D. Section 096566 – Wood Athletic Flooring

### 1.03 REFERENCES

A. ASTM C309 - Standard Specification for Liquid Membrane-Forming Compounds for Curing Concrete.

B. AASHTO M 148 - Liquid Membrane Forming Compounds for Curing Concrete.

### 1.04 SUBMITTALS

A. Comply with Section 01330 - Submittal Procedures.

B. Submit manufacturer's product data and application instructions.

### 1.05 DELIVERY, STORAGE, AND HANDLING

A. Deliver materials to site in manufacturer's original, unopened containers and packaging, with labels clearly identifying product name and manufacturer.

B. Store materials in a clean, dry area in accordance with manufacturer's instructions.

C. Keep product from freezing.

D. Avoid direct contact with this product as it may cause mild to moderate irritation of the eyes and/or skin.

E. Protect materials during handling and application to prevent damage or contamination.

F. Do not mix with any compound containing solvent.

G. Avoid aggressive mixing as foaming may occur.

1.06 ENVIRONMENTAL REQUIREMENTS

A. Do not apply product when air, surface, or material temperatures are expected to fall below 40° F (4° C) within four hours of expected application.

B. Do not apply to frozen concrete.

C. Do not use on dense or porous surfaces.

PART 2 PRODUCTS

2.01 MANUFACTURER

A. W. R. MEADOWS®, INC., PO Box 338, Hampshire, Illinois 60140-0338. (800) 342-5976. (847) 683-4500. Fax (847) 683-4544. Website: www.wrmeadows.com.

2.02 MATERIALS

A. Performance Based Specification: Concrete curing compound shall be a water base, hydrocarbon resin curing compound meeting maximum volatile organic compound (VOC) content limits of 350 g/L for concrete curing compounds as required by the U.S. EPA Architectural Coatings Rule. Curing compound shall meet the following requirements:

1. ASTM C309, Type 1, Class B.
2. AASHTO M 148, Type 1, Class B.

B. Proprietary Based Specification: 1100 Concrete Curing Compound by W. R. MEADOWS.

PART 3 EXECUTION

3.01 EXAMINATION

A. Examine surfaces to receive curing compound. Notify architect if surfaces are not acceptable. Do not begin surface preparation or application until unacceptable conditions have been corrected.

3.02 SURFACE PREPARATION

A. Protect adjacent surfaces not designated to receive curing compound.

B. Clean and prepare surfaces to receive curing compound in accordance with manufacturer's instructions.

C. Concrete surface water should be dissipated when used on new concrete

D. Concrete surfaces should not be marred by walking workers.

3.03 APPLICATION

A. Apply curing compound in accordance with manufacturer's instructions.

B. Ensure product is mixed for optimum performance. Avoid aggressive mixing as foaming may occur.

C. Use sprayer with a Chapin 1949 sprayer that produces a flow rate of 0.5 GPM (1.9 LPM) per minute at a pressure of 40 psi (.276 MPa).

D. Avoid puddling in low areas.

3.04 PROTECTION

A. Restrict foot traffic for at least four hours; 12 hours is preferable.

END OF SECTION

# Division 6:
# Wood, Plastics & Composites

# SECTION 062000 – FINISH CARPENTRY

## 1.0 GENERAL

### 1.1 SUMMARY

A. This Section includes all labor, materials, equipment, operations, or methods listed, mentioned or scheduled on plans and/or herein specified, including all incidentals necessary and required for completion of work under this Section.

B. Provide and install interior plywood as shown on project Drawings and as specified herein.

### 1.2 RELATED SECTIONS

A. Documents affecting work of this Section include, but are not necessarily limited to, General Conditions, Special Conditions and Division 1 of these Contract Documents.

E. Section 092900 - Gypsum Board: Provision of gypsum board.

F. Section 099100 - Painting: For opaque finish of wood surfaces.

### 1.3 REFERENCES

A. AISI - American Iron and Steel Institute

B. ANSI - American National Standards Institute

1. B18.2.1 - Square and Hex Bolts and Screws.

2. B18.6.1 - Wood Screws (Inch Series).

C. APA - American Plywood Association (APA)

1. Guide to Plywood Grades.

D. ASTM - American Society for Testing and Materials

1. A153 - Standard Specification for Zinc Coating (Hot-Dip) on Iron and Steel Hardware.

E. USPS - United States Product Standard

1. PS1 - Construction and Industrial Plywood.

F. Wl - Woodwork Institute 1. Manual of Millwork.

G. WRCLA.- Western Red Cedar Lumber Association

1.4 SUBMITTALS

A. Product Data: Submit for all items.

B. Shop Drawings

1. Indicate dimensioned plans, sections, elevations, large scale details, location of each item, materials and wood species, component profiles, fastenings, jointing details, finishes, accessories, and schedule of finishes.

2. Follow WI standards for shop drawings.

C. Samples

1. Wood Items: Submit samples finished as specified.

a. Grade A plywood: 3 samples, tongue and groove, painted, 12 by 12 inches each.

b. At least 1 sample of finished solid stock showing complete range of variations in grain, color, and other features, minimum 6 inches width by 18 inches.

c. Samples shall be resubmitted for acceptable finish until approved by the Architect.

2. All metal trim pieces and mounting hardware in 6 inch lengths.

3. Provide 2’ x 3’ sample of assembled tongue and groove system including joint, end condition, and outside corner mounted on plywood backing using the Z-clips, showing fully coordinated assembly. Approval required prior to proceeding with mock-up described below.

D. Mock-up

1. Interior Plywood: Develop full wall mock-up as indicated on the drawings showing all joints. Approval by architect required prior to installation of paneling the remainder of project.

1.5 QUALITY ASSURANCE

A. Plywood shall bear grade-trademarks of appropriate grading agency.

1.6 DELIVERY, STORAGE, AND HANDLING

A. Acceptance at Site: Do not deliver interior finish carpentry until environmental conditions meet requirements specified for installation areas. If finish carpentry must be stored in other than installation areas, store only where environmental conditions meet requirements specified for installation areas.

B. Storage and Protection: Keep materials under cover and dry. Protect against exposure to weather and contact with damp or wet surfaces. Stack plywood. Provide for air circulation within and around stacks and under temporary coverings.

**2.0 PRODUCTS**

2.1 MATERIALS

A. Lumber Standards: Furnish lumber manufactured to comply with PS 20.

1. Grade Stamps: Provide lumber with each piece factory marked with grade stamp evidencing compliance with grading rule requirements and identifying grading agency, grade, species, moisture content at time of surfacing, and mill.
2. For exposed lumber, furnish pieces with grade stamps applied to ends or back of each piece, or omit grade stamps entirely and provide certificates of grade compliance issued by inspection agency.

C. Paint Materials

1. Back Priming Interior Plywood: As specified in Section 099000.

D. Fasteners for Interior Finish Carp entry: Nails, screws, z-clips, and other anchoring devices of type, size, material, and finish required for application indicated to provide secure attachment, concealed where possible.

1. Provide fasteners and anchorage s with hot-dip galvanized coating complying with ASTM A153.

2. Use finish nails where exposed.

E. Glue: Aliphatic or phenolic-resin wood glue recommended by manufacturer for general carpentry use.

F. Interior Plywood: APA A-A, USPS PS1, Exposure 1, thickness as indicated.

1. Formaldehyde and ammonia free core except as otherwise required for fire treated material.

2. Fire Treatment As specified in Section 060573, for plywood used in electrical and telephone room.

G. Panel Hardware: Extruded clear anodized aluminum hardware and trim as indicated on drawings.

1. Extruded clear anodized aluminum end caps and corner trim as indicated on drawings.

2.2 FABRICATION

A. Wood Moisture Content Comply with requirements of specified inspection agencies and manufacturer's recommendations for moisture content of finish carpentry on relative humidity conditions existing during time of fabrication and in installation areas.

B. Fabricate finish carpentry to dimensions, profiles, and details indicated.

1. Ease edges of lumber less than 1 inch in nominal thickness to 1/16-inch radius.

2. Ease edges of lumber 1 inch or more in nominal thickness to 1/8-inch radius.

2.3 FINISHES

A. Shop Finishing

1. Back Priming: Back prime all concealed wood surfaces.

B. Field Finishing

1. Transparent finish paint in accordance with requirements of Section 064100.

2. Opaque finish paint in accordance with requirements of Section 099000.

**3.0 EXECUTION**

3.1 EXAMINATION

A. Examine substrates, with installer present, for compliance with requirements for installation tolerances and other conditions affecting installation and performance of finish carpentry. Do not proceed with installation until unsatisfactory conditions have been corrected.

3.2 PREPARATION

A. Clean substrates of projections and substances detrimental to application.

B. Prime and backprime lumber for painted finish. Comply with requirements for surface preparation and application in Section 099000.

3.3 INSTALLATION, GENERAL

A. Do not use finish carpentry materials that are unsound, warped, improperly treated or finished, inadequately seasoned, or too small to fabricate with proper jointing arrangements.

B. Install finish carpentry plumb, level, true, and aligned with adjacent materials. Use concealed shims where required for alignment

1. Scribe and cut finish carpentry to fit adjoining work. Refinish and seal cuts as recommended by manufacturer.

2. Countersink nails, fill surface flush, and sand where face nailing is unavoidable.

3. Install to tolerance of 1/8-inch in 96 inches for plumb and level. Install adjoining finish carpentry with 1/32-inch maximum offset for flush installation and 1/16-inch maximum offset for reveal installation.

4. Coordinate finish carpentry with materials and systems in or adjacent to standing and running trim and rails. Provide cutouts for mechanical and electrical items that penetrate exposed surfaces of trim and rails.

5. Align new materials with existing adjacent.

C. Finish Painting

1. Opaque: As specified in Section 099100.

3.4 STANDING AND RUNNING PANEL INSTALLATION

A. Install with minimum number of joints practical, using full-length pieces from maximum lengths of lumber available. Do not use pieces less than 24 inches long, except where necessary. Stagger joints in adjacent and related standing and

running trim. Cope at returns and miter at comers to produce tight-fitting joints with full-surface contact throughout length of joint Use scarf joints for end-to-end joints. Plane backs of casings to provide uniform thickness across joints, if required.

1. Match color and grain pattern across joints.

2. Install trim after gypsum board joint finishing operations are completed.

3. Drill pilot holes in hardwood before fastening to prevent splitting. Fasten to prevent movement or warping. Countersink fastener heads on exposed carpentry work and fill holes.

4. Fit exterior joints to exclude water. Apply flat grain lumber with bark side exposed to weather.

B. Panel Installation

1. Install panels aligned and leveled. Provide pre-finished trim at all edges, and corners.

3.5 ADJUSTING

A. Repair damaged or defective finish carpentry where possible to eliminate functional or visual defects. Where not possible to repair, replace finish carpentry. Adjust joinery for uniform appearance.

**END OF SECTION**

# Division 7:
# Thermal & Moisture Protection

# SECTION 071000 – CONCRETE WATERPROOFING

## 1.0 GENERAL

### 1.1 SUMMARY

A. This Section includes all labor, materials, equipment, operations, or methods listed, mentioned or scheduled on the plans and/or herein specified, including all incidentals necessary and required for completion of work under this Section. Including but no limited to:

1. Fluid applied waterproofing membrane, including surface conditioner and drainage composite.

2. Filter Fabric

### 1.2 RELATED SECTIONS

A. Documents affecting work of this Section include, but are not necessarily limited to, General Conditions, Special Conditions and Division 1 of these Contract Documents.

B. Section 312333 – Trenching, Backfilling and Compacting

C. Section 334000 – Storm and Sewage Systems

D. Section 033000 – Cast in Place Concrete

### 1.3 REFERENCES

A. ASTM D E96 – Test Methods for Water Vapor Transmission of Materials

### 1.4 QUALITY ASSURANCE

A. Waterproofing shall be installed only by manufacturer's approved applicator.

B. Perform Work in accordance with manufacturer's instructions, as shown, and – for conditions not instructed or shown – NRCA Waterproofing Manual.

### 1.5 SUBMITTALS

A. Comply with pertinent provisions of Section 013300, Submittal Procedures.

B. Product data: Within 5 calendar days after the Contractor has received the City's Notice to Proceed, submit:

1. Data for surface conditioner, drainage composite, and joint and crack sealants, with temperature range for application of waterproofing membrane.

C. Shop Drawings: Indicate special joint or termination conditions and conditions of interface with other materials.

D. Manufacturer's Installation Instructions: submit special procedures and perimeter conditions requiring special attention.

E. Warranty: Submit manufacturer's warranty and ensure forms have been completed in Owner's name and registered with manufacturer.

1.7 DELIVERY, STORAGE AND HANDLING

A. Deliver and store materials undamaged in original containers with manufacturer's labels and seals intact.

1.8 ENVIRONMENTAL REQUIREMENTS

A. See Section 013543, Special Environmental Requirements and Procedures.

B. Maintain ambient temperatures above 40°F for 24 hours before and during application and until liquid or mastic has cured.

**2.0 PRODUCTS**

2.1 MANUFACTURERS AND PRODUCTS

A. Waterproofing Membrane: American Hydrotech, Inc. "Monolithic Membrane 6125 – Standard Assesmbly", or approved equal.

B. Drainage Composite: American Hydrotech "Hydrodrain 420", or approved equal.

C. Filter Fabric: US Fabrics Inc., US 80NW, non woven fabric, 150 gal/min/sf flow rate.

D. Accessories: Surface Conditioner for Waterproof Membrane: Manufacturer's required product.

**3.0 EXECUTION**

3.1 EXAMINATION

A. Surface Condition: Surfaces shall dry, clean, firm, and free from dust, dirt, oil, and all other foreign matter that may be detrimental to the performance of the membrane.

B. Damaged surfaces, including voids, cracks and holes, shall be repaired before work of this section begins.

C. Do not begin work until satisfactory conditions have been met.

## 3.2 INSTALLATION

A. Apply waterproofing system in accordance with manufacturer's instructions, unless otherwise shown.

B. Prior to application of membrane, apply surface conditioner as a fine spray evenly at the rate recommended by the manufacturer and allow to dry.

C. Waterproofing membrane shall be applied evenly at a rate to provide a continuous coating. Apply a uniform thickness equal to the minimum recommended by manufacturer. Minimum shall not be an average, but an actual minimum as measured at any location.

D. Apply drainage composite over waterproof membrane with fabric face toward backfill material. Overlap panel edges by 2", dimples into dimple.

E. Wrap filter fabric over perforated drain pipe before backfilling. Cover all exposed surfaces of pipe and extend out on both sides enough to be held in place by backfill. Overlap edges along length of pipe.

**END OF SECTION**

# SECTION 072116 - BLANKET INSULATION

## 1.0 GENERAL

### 1.1 SUMMARY

A. This Section includes all labor, materials, equipment, operations, or methods listed, mentioned or scheduled on the plans and/or herein specified, including all incidentals necessary and required for completion of work under this Section.

B. Provide and install building insulation as indicated on the project Drawings and as specified herein, including insulation of roof areas, ceiling areas, sound insulation of interior walls, and insulation of exterior walls.

### 1.2 RELATED SECTIONS

A. Documents affecting work of this Section include, but are not necessarily limited to, General Conditions, Special Conditions and Division 1 of these Contract Documents.

B. Section 074113 – Metal Roof Panels

C. Section 092900, Gypsum Board

### 1.3 REFERENCES

A. American Society for Testing and Materials (ASTM):

1. ASTM C665 – Mineral Fiber Blanket Thermal Insulation for Light Frame Construction and Manufactured Housing.

2. ASTM E84 – Test Method for Surface Burning Characteristics of Building Materials.

B. National Fire Protection Association (NFPA):

1. Test of Surface Burning Characteristics of Building Materials.

C. Underwriters Laboratories, Inc. (UL):

1. UL 723- Tests for Surface Burning Characteristics of Building Materials.

D. California Building Code, 2001.

### 1.4 SUBMITTALS

A. Comply with pertinent provisions of Section 013300, Submittal Procedures.

1.5 PRODUCT HANDLING

A. Deliver materials to the site and store in a safe dry place with all labels intact and legible at time of installation.

B. Use all means necessary to protect insulating materials before, during and after installation and to protect the installed work and materials of other trades.

**2.0 PRODUCTS**

2.1 MANUFACTURER

A. Johns Manville, www.jm.com, 1-800-654-3103, or approved equal.

1. Batt Insulation: Formaldehyde-Free Foil-Faced Batts.

2. Semi-Rigid Insulation: Insul-SHIELD I/S 225.

2.2 MATERIALS

A. General:

1. Comply with California Energy Code, CCR Title 24, Part 6, Subchapter 2, Section 118: Certification that insulation complies with California Quality Standards for Insulating material (CCR Title 20, Chapter 4, Article 3.)

2. Comply with California Building Code Section 707: Flame spread rating not to exceed 25 and smoke density not to exceed 450 when tested in accord with UBC Standard 8-1.

3. Products shall be formaldehyde free.

B. General: Flame Spread for all insulation specified herein shall be 25. Smoke Developed shall be 50.

B. Thermal Insulation:

1. ComfortTherm - Poly-encapsulated formaldehyde-free Thermal fiber glass insulation:

a. R25 in Exterior Walls–wood framing

Thickness: 8-1/4 in.

Width: 15 in.

b. R21 in Interior Walls–wood framing

Thickness: 5-1/2 in.

Width: 15 in.

c. R30 in Ceilings

Thickness: 10-1/4 in.

Width: 24 in.

C. Batt Insulation: Type III, Class B, Category 1 (ASTM C665); preformed glass batt; conforming to the following.

1. Thermal Resistance: R13 minimum..

2. Faced on one side with foil reinforced Kraft vapor retarder.

3. Bright aluminum self-adhering type, mech reinforced, 2 inch wide tape.

4. Stick pins with caps; no self-sticking pins.

5. Neoprene rubber acoustic deck closures, minimum 40 pcf density, Class 1 listing per UBC Standard 8-1 (ASTM E84) or UL 94; shaped to fit tight into metal deck flutes.

D. Semi-Rigid Insulation: Type IB, Category 2 (ASTM C112); semi-rigid roll product.

1. Thermal Resistance: R13 minimum..

2. Faced on one side with foil reinforced Kraft vapor retarder.

3. Stick pins with caps; no self-sticking pins.

## 3.0 EXECUTION

### 3.1 SURFACE CONDITIONS

A. Inspection:

1. Prior to all work of this Section, carefully inspect the installed work of all other trades and verify that all such work is complete to the point where this installation may properly commence.

2. Verify that building insulation may be installed in accordance with the original design and the manufacturer's recommendations.

B. Discrepancies:

1. In the event of discrepancy, immediately notify the Architect and City Representative.

2. Do not proceed with installation in areas of discrepancy until all such discrepancies have been fully resolved.

3.2 INSTALLATION

A. General:

1. Except as otherwise directed by the Architect, install all insulation in accordance with instructions of the manufacturer.

B. Inspection:

1. Upon completion of the installation, visually inspect each insulated area and verify that all insulation is complete and properly installed.

3.3 CLEANUP

A. Upon completion, remove all debris resulting from work of this Section.

3.4 WARRANTY

A. Product delivered shall be free of defects.

**END OF SECTION**

# SECTION 072200 – ROOF AND DECK INSULATION

## 1.0 GENERAL

### 1.1 SUMMARY

A. This Section includes all labor, materials, equipment, operations, or methods listed, mentioned or scheduled on the plans and/or herein specified, including all incidentals necessary and required for completion of work under this Section.

B. Provide and install rigid expanded polystyrene (EPS) insulation as indicated on Drawings and as specified herein, including:

1. Rigid foam roof insulation for flat roof areas

### 1.2 RELATED SECTIONS

A. Documents affecting work of this Section include, but are not necessarily limited to, General Conditions, Special Conditions and Division 1 of these Contract Documents.

B. Section 061000 – Rough Carpentry

C. Section 075100 – Thermoplastic Polyolefin (TPO) membrane roofing

### 1.3 REFERENCES

A. ASTM C578 - Standard Specification for Rigid, Cellular Polystyrene Thermal Insulation.

B. ASTM C1289 – Standard Specification for Faced Rigid Cellular Polyisocyanurate Insulation Board.

C. ASTM D 312 - Standard Specification for Asphalt Used in Roofing.

D. ASTM E 108 - Standard Test Methods for Fire Tests of Roof Coverings.

E. ASTM E 119 - Standard Test Methods for Fire Tests of Building Construction and Materials.

F. FM 4450 - Approval Standard - Class I Insulated Steel Roof Decks.

G. FM 4470 - Approval Standard - Class I Roof Covers.

H. LTTR – Long Term Thermal Resistance predicted by CAN/ULC-S770-03.

I. UL 263 - Fire Tests of Building Construction and Materials.

J. UL 790 – Standard Test Methods for Fire Tests of Roof Coverings.

C. UL 1256 – Fire Test of Roof Deck Constructions.

D. UL 1897 – Uplift Tests for Roof Covering Systems.

1.4 SUBMITTALS

A. Comply with provisions of Section 013300, Submittal Procedures.

B. Product Data: Submit manufacturer's product data for specified products, including installation instructions.

C. Shop Drawings: Submit shop drawings showing layout, profiles and product components.

D. Samples:

1. Submit 6 by 6 inch (152 by 152 mm) samples of each board type required.

2. Submit samples of each fastener type required.

E. Quality Assurance Submittals: Submit the following:

1. Test Compliance: Summary of test compliance with specified performance characteristics and physical properties.

2. Certificates: Product certificates signed by manufacturer certifying materials comply with specified performance characteristics and criteria, and physical requirements. Manufacturer shall supply a hard copy product certificate showing Third Party Quality Control.

a. Physical properties in compliance with ASTM C578 for the type specified herein.

b. ICC ES Report.

1.5 DELIVERY, STORAGE AND HANDLING

A. Ordering: Comply with manufacturer's ordering instructions and lead time requirements to avoid construction delays.

B. Delivery: Deliver insulation in packages labeled with material name, thermal value and product code

C. Storage and Protection: Store materials unopened and above ground. Protect from moisture and sunlight prior to installation.

1. Products shall not be exposed to open flame or other ignition sources.

2. When stored outdoors, stack insulation on pallets above ground or roof deck and cover with tarpaulin or other suitable waterproof coverings. Slit or remove manufacturer´s packaging before covering with waterproof covering.

1.6 QUALITY ASSURANCE

A. Installer Qualifications: Installer experienced in performing work of this section who has specialized in installation of work similar to that required for this project.

B. Source Quality Assurance & Control: Each system component required shall be obtained from a single manufacturer.

C. Field Quality Control:

1. Manufacturer's Field Services: Upon City's request, provide manufacturer's field service consisting of periodic site visit for inspection of product.

a. Site Visits: number and duration of periodic site visits shall be as determined by the City.

D. Regulatory Requirements: Installation must comply with the requirements of all applicable local, state and national jurisdictions.

1. Approvals: EPS is made to industry recognized standards monitored by Underwriters Laboratories. Contact RControl for applicable compliance information.

E. Pre-installation Meetings: At the request of the Architect and/or City conduct a pre-installation meeting to verify project requirements, substrate conditions, installation instructions, and manufacturer's warranty requirements. Comply with Sections 013113, Project Coordination and 013119, Project Meetings.

1.7 WARRANTY

A. Manufacturer's Warranty: Submit for City's acceptance the manufacturer's Standard Limited Warranty document.

1. Manufacturer's warranty is in addition to, and not a limitation of, other rights City may have under Contract Documents.

2. Warranty Period: Term as provided for in Manufacturer’s Standard Limited Warranty.

a. 20-year in-service, non-prorated R-Value warranty covering the long-term thermal performance of product.

## 2.0 PRODUCTS

### 2.1 MANUFACTURER

A. Atlas Roofing Corporation, 2000 RiverEdge Pkwy, Suite 800, Atlanta, GA Ph. (770) 952-1442 Fax (770) 952-3170, or approved equal.

B. Provide polyiso roof board insulation from a single manufacturer.

### 2.2 MATERIALS

A. General: Materials herein must be compatible with all components of the roof assembly and the roofing membrane system.

1. Substitutions to materials herein shall not be permitted.

B. Tapered Foam Roof Insulation: Tapered ACFoam-IV: Closed-cell HCFC FREE "Green" polyisocyanurate foam core manufactured using ACUltra Hydrocarbon blowing agent and integrally laminated to heavy non-asphaltic fiber-reinforced felt facers; FM 1-90 wind uplift classification; compressive strength - 25 psi.

1. ASTM C 1289, Type II, Glass I, Grade 3

a. Minimum thickness and Slope shall be determined in Shop Drawings as provided by Contractor, and as approved by Architect.

C. Accessories: When required, roof tape for joint covering shall be fiborous glass or 15 lb. organic felt, minimum 4" width.

## 3.0 EXECUTION

### 3.1 EXAMINATION

A. Prior to commencement of work of this Section, verify conditions of work of other Sections to ensure conditions are acceptable for product installation in accordance with manufacturer's instructions.

1. Any adverse conditions shall be reported in writing. Do not proceed with installation until adverse conditions are corrected.

### 3.2 PREPARATION

A. Preparation: Sweep and remove all loose particles and debris from the roof deck surface. Ensure that roof deck is sound, smooth and free of moisture.

B. Verify that roof drains, scuppers, roof curbs, nailers, equipment supports, vents and other roof accessories are secured properly and installed in conformance with Contract Drawings and submittals.

C. Verify that deck is structurally sound to support installers, materials and equipment without damaging or deforming work.

1. Start of installation indicates installer accepts conditions of existing deck surfaces.

3.3 INSTALLATION

A. Install in compliance with manufacturer's installation instructions using approved mechanical fastners.

B. Lay insulation with all joints tightly butted and attach per membrane manufacturer's specifications.

C. All crickets and/or tapered insulation shall be installed per approved Shop Drawings.

D. Follow the membrane manufacturer's specifications for fastening requirements for the insulation.

E. Protect insulation from wind blow-off during all phases of construction. Temporary ballast and end-of-work-day water cut-offs must be used.

3.4 CLEANING AND PROTECTION

A. Remove trash and construction debris from insulation surface prior to application of roofing membrane.

B. Do not leave installed insulation exposed to weather. Cover and waterproof with completed roof system immediately after installation.

1. Temporarily seal exposed insulation edges at the end of each day.

C. Remove and replace installed insulation that has become wet or damaged with new insulation.

D. Protect installed insulation and roof cover from traffic by use of protective covering materials during and after installation.

**END OF SECTION**

# SECTION 072616 - BELOW-GRADE VAPOR BARRIER

## 1.0 GENERAL

### 1.1 SUMMARY

A. This Section includes all labor, materials, equipment, operations, or methods listed, mentioned or scheduled on the plans and/or herein specified, including all incidentals necessary and required for completion of work under this Section.

B. Provide and install below-grade vapor barrier where shown on the project Drawings and as specified herein.

### 1.2 RELATED SECTIONS

A. Documents affecting work of this section include, but are not necessarily limited to, General Conditions, Special Conditions and Division 1 of these Contract Documents.

B. See Structural Drawings

### 1.3 REFERENCES

A. American Society for Testing & Materials (ASTM):

1. ASTM D1709-04 : Impact Resistance of Plastic Film by the Free-Falling Dart Method.

2. ASTM E96-95: Water Vapor Transmission of Materials.

3. ASTM E154-99: Standard Test Method for Water Vapor Retarders Used in Contact with Earth Under Concrete Slabs, on Walls, or as Ground Cover.

4. ASTM E1745-97: Standard Specification for Water Vapor Retarders Used in Contact with Soil or Granular Fill Under Concrete Slab.

5. ASTM E631: Terminology of Building Constructions

6. ASTM E1643-98: Standard Practice for Installation of Water Vapor Retarders Used in Contact with Earth or Granular Fill Under Concrete Slabs.

7. ASTM F1249-90: Standard Test Method for Water Vapor Transmission Rate Through Plastic Film and Sheeting Using a Modulated Infrared Sensor.

8. ASTM D882-02: Tensile Properties of Thin Plastic Sheeting.

B. American Concrete Institute (ACI)

1. ACI302.1R-96 – Minimum Thickness (10-mils)

1.4 SUBMITTALS

A. Comply with provisions of Section 013300, Submittal Procedures.

B. Submit manufacturer's product data for each material specified herein, including test reports or manufacturer's certificates indicating materials comply with specified requirements.

C. Submit sample of each material specified herein.

1.5 QUALITY ASSURANCE

A. Use adequate numbers of skilled workmen who are thoroughly trained and experienced in the necessary crafts and who are completely familiar with the specified requirements and the methods necessary for proper performance of the work of this Section.

B. Cooperate as required in performance of the specified testing and inspecting.

1.6 DELIVERY, STORAGE AND HANDLING

A. Comply with manufacturer's recommendations for storage and handling of product.

**2.0 PRODUCT**

2.1 MANUFACTURER

A. Stego Industries LLC, San Clemente, CA, Tel: 949-257-4100, Toll Free: 877-464-7834, Fax: 949-257-4113, www stegoindustries.com, or approved equal.

2.2 MATERIALS

A. Stego Wrap Vapor Barrier (underslab): multi-layer plastic extrusion with a proprietary formulation of prime, virgin, polyolefin resins - 15 Mil

1. Thickness: 15-mils

2. Roll Dimensions: 14 ft. x 140 ft.

3. Roll Weight: 140 lbs.

4. Permeance: .0084 perms, .0035 WVTR per ASTM F1249

B. Other Materials: Provide other materials not specifically described herein but required for a complete and proper installation, as selected by the Contractor and subject to the approval of the Architect and the manufacturer of underslab vapor retarder.

## 3.0 EXECUTION

### 3.1 EXAMINATION OF SURFACE CONDITIONS

A. Examine the areas and conditions under which work of this Section will be performed.

1. Correct conditions detrimental to timely and proper completion of the work.

2. Do not proceed until satisfactory conditions are corrected.

### 3.2 INSTALLATION

A. Comply with manufacturer's instructions and recommended methods of installation, and in accordance with procedures outlined in ASTM E1643.

B. After base for concrete has been leveled, compacted and tamped, install the vapor barrier over the base and compacted fill, with the longest dimension parallel to the direction of the pour of the concrete.

C. All joints should be lapped 6 inches and sealed with tape. Seal penetrations.

D. Screed pin(s) shall not be driven through vapor barrier.

E. All penetrations must be sealed using a combination of Stego Wrap, Stego Tape and/or Stego Mastic.

F. Product should be as clean and dry as possible before sealing with tape. Verify with manufacturer of underslab vapor barrier.

**END OF SECTION**

# SECTION 075423 – THERMOPLASTIC POLYOLEFIN (TPO) MEMBRANE ROOFING

## 1.0 GENERAL

### 1.1 SUMMARY

A. This Section includes all labor, material, equipment, operations, or methods listed, mentioned or scheduled on the plans and/or herein specified, including all incidentals necessary and required for completion of work under this Section.

B. Provide and install a TPO adhered membrane roofing system as shown on Drawings and as specified herein, including all related accessories.

### 1.2 RELATED SECTIONS

A. Documents affecting work of this Section include, but are not necessarily limited to, General Conditions, Special Conditions and Division 1 of these Contract Documents.

.

B. Division 7 – Thermal and Moisture Protection: All Sections.

### 1.3 REFERENCES

A. American Society for Testing and Materials (ASTM):

1. ASTM C472 - Standard Test Methods for Physical Testing of Gypsum, Gypsum Plasters and Gypsum Concrete

2. ASTM C473 - Standard Test Methods for Physical Testing of Gypsum Panel Products

3. ASTM C518 - Standard Test Method for Steady-State Thermal Transmission Properties by Means of the Heat Flow Meter Apparatus

4. ASTM C1177 – Standard Specification for Glass Mat Gypsum Substrate for Use as Sheathing

5. ASTM E84 – Standard Test Method for Surface Burning Characteristics of Building Materials

6. ASTM E96 - Standard Test Methods for Water Vapor Transmission of Materials

7. ASTM E661 - Standard Test Method for Performance of Wood and Wood-Based Floor and Roof Sheathing Under Concentrated Static and Impact Loads

B. Underwriters Laboratories, Inc. (UL).

C. Sheet Metal and Air Conditioning Contractors' National Association (SMACNA).

D. National Roofing Contractors' Association (NRCA).

E. Factory Mutual Engineering and Research (FM).

F. Polyisocyanurate Insulation Manufacturers Association (PIMA).

G. Occupational Safety and Health Administration (OSHA).

H. Single Ply Roofing Industry (SPRI).

1.4 SUBMITTALS

A. Comply with provisions of Section 013300, Submittal Procedures.

B. General: Submit Shop Drawings, Product Data, Samples, and Quality Control Submittals specified below at the same time as one package.

1. All submittal packages must be submitted prior to the Pre-Installation conference.

C. Product Data: submit Catalog sheets and installation instructions for each material specified.

D. Shop Drawings: When there is a proposed deviation from the Contract Documents, submit the revised detail labeled as such for approval. On the revised detail show existing conditions and referenced directly to the related details on the Drawings.

1. Submit an accurate layout of the tapered insulation, designed and provided by the membrane manufacturer, showing the slopes to the drains.

a. Show cross section drawings illustrating the location and thickness of tapered insulation pieces and filler pieces.

b. Show the thickness of the insulation system at high and low points.

c. Submit an accurate layout of the wood nailers showing their required locations, and required spacing between nailers. Show the direction of the laps in relation to the slope of the deck and the wood nailers.

E. Samples: All submitted samples must be labeled and supplied by manufacturer of materials.

1. Roofing Membrane: One each type

2. Fasteners: Three each type

F. Quality Control Submittals: if requested, Contractor shall provide the following Test Reports:

1. Roof drain and leader test or submit plumber's verification

2. Core cut

3. Roof flood test

G. Contract Closeout Submittals: provide the following at completion of work of this Section:

1. Final invoice for project

2. Close-out of any change orders

3. Final waivers of lien from all material suppliers and subcontractors

4. Completed punch list certification by Contractor and the District.

H. Warranty: Submit the roofing membrane manufacturer's warranty covering workmanship and materials that has been executed by authorized representative of roofing system manufacturer. See part 1.10 of this Section for Warranty requirements.

1.5 DELIVERY, STORAGE AND HANDLING

A. Deliver roofing materials to site in manufacturer's unbroken containers bearing the manufacturer's printed labels. Unlabeled cartons or packages shall not be stored on site.

1. All materials that arrive on site must have the following information clearly displayed on packaging:

a. Manufacturer

b. Type (ASTM)

c. SP (Softening Point)

d. FP (Flash Point)

e. FBT (Finished Blowing Temperature)

f. EVT (Equiviscous Temperature)

2. For all bitumen delivered in tanker trucks, provide same manufacturer's certifications listed above.

B. Store materials a minimum of 6" off the ground, in a dry, well ventilated place protected from the weather.

1. Enclosed trailers are recommended.

2. Temperature conditioned storage is required for temperature sensitive items.

3. Mark for clear and evident identification all material that has been subject to moisture, and remove such damaged materials from site.

C. Handle roll goods with care.

1. Do not use roll goods which have been damaged.

2. Leave materials in their packaging until ready for use.

D. In event of damage, immediately make all repairs and replacements required by the City

E. Disposal:

1. All removed materials become the property of the contractor.

2. Inspect ground areas surrounding roof on a daily basis for loose debris.

3. Immediately move all debris off roof and into approved dumpster.

4. Dumpster staging areas must be kept neat and tidy. Do not allow to overflow.

5. All debris must be transported to a legal dumpsite or recycling facility and documentation of each load must be maintained by the Contractor.

## 1.6 PERFORMANCE AND DESIGN REQUIREMENTS

A. General: Provide installed roofing membrane and base flashings that remain watertight; do not permit the passage of water; and resist specified uplift pressures, thermally induced movement, and exposure to weather without failure.

B. Material Compatibility: Provide roofing materials that are compatible with one another under conditions of service and application required, as demonstrated by roofing membrane manufacturer based on testing and field experience.

C. Jobsite Safety: Execute all operations and provide a safe work environment in accordance to OSHA standards and regulations. This requirement applies to all contractor personnel, associated subcontractors, workers in other trades, and jobsite visitors.

1. Follow all industry fire prevention guidelines for storage of materials, staging areas, roof access, and application means and methods.

2. Any applicable local fire codes supersede industry guidelines.

D. Roofing System Design: Provide a membrane roofing system that is identical to systems that have been successfully tested by a qualified testing and inspecting agency to resist uplift pressure calculated according to ASCE 7-02.

E. FMG Listing: Provide roofing membrane, base flashings, and component materials that comply with requirements in FMG 4450 and/or FMG 4470 as part of a membrane roofing system and that are listed in FMG's "RoofNav" for Class 1 for noncombustible construction and Class A for exterior fire rating, as applicable. Identify materials with FMG markings.

F. UL Listing: Provide membrane roofing materials with the fire-test-response characteristics indicated as determined by testing identical products per test methods mandated by UL. Identify materials with appropriate markings of applicable testing and inspecting agency.

## 1.7 QUALITY ASSURANCE

A. Certifications:

1. General: Provide letter from the roofing membrane manufacturer certifying the proposed roofing assembly, compatibility of materials and total R-value of the insulation system.

2. Membrane Manufacturers Certifications:

a. Submit written certification that the manufacturer subscribes to a quality assurance process, or equivalent, in order to optimize product quality. Manufacturer must demonstrate and verify a defined Process Capability Potential (Cpk) program designed to ensure continuous improvement. A certificate of analysis of the quality assurance process will be mandatory upon the written request to the manufacturer from the City

3. Contractor's Certification:

a. Provide a letter from the membrane manufacturer certifying that the applicator is licensed or approved to install the roof system.

b. Provide names, address, and telephone numbers of five buildings where the applicator has installed similar roof systems that have the manufacturer's guarantee issued. Include the types of systems installed, the manufacturer's name, and the guarantee numbers.

c. Letter certifying that the job foreman or crew chief and at least one other member of the roofing crew have installed at least similar systems and are thoroughly familiar with all aspects of the installation.

B. Contractor's Qualifications:

1. Roofing Firm Qualifications:

a. Installation of a minimum of ten roofs of comparable size, scope, and complexity as the roofing system specified in the Contract Documents, including all related sheet metal work, if applicable. (List last five such jobs within 50 miles of the job site, including address, type of system and number of plies, if applicable, square footage, date installed and District/agent with whom contracted).

1.8 PROJECT CONDITIONS

A. Weather Limitations: Proceed with installation only when existing and forecasted weather conditions permit roofing system to be installed according to Manufacturer's written instructions and guarantee requirements.

1. Do not start roofing if rain is imminent, or ambient temperature is below 45°F.

2. If rain occurs during roof membrane application, cease operations and protect deck, insulation, penetrations and membrane from water damage and intrusion.

B. Comply with all fire regulations. Ensure properly rated, charged, and inspected fire extinguishers are on the roof and staging area.

1.9 PRE-INSTALLATION CONFERENCE

A. Comply with provisions of Section 013119, Project Meetings.

B. Prior to commencement of roof deck construction, a pre-installation conference shall be conducted at Project Site. Those in attendance shall include the Architect, the City of Morgan Hill and City of Morgan Hill's insurer (if applicable), Testing and Inspecting Agency Representative, Roofing Contractor and/or Installer, roofing system manufacturer's representative, deck installer, and installers whose work interfaces with or affects roofing, including installers of roof accessories and roof-mounted equipment.

C. The following methods and procedures related to roof deck construction and roofing system installation shall be reviewed during the meeting:

1. Means, methods, and procedures related to roofing installation, including manufacturer's written instructions.

2. Project Safety Plan for site conditions, enforcement, compliance, or District imposed restrictions that may be required.

3. Finalization of construction schedule and verification of availability of materials, Installer's personnel, equipment, and facilities needed to make progress and avoid delays.

4. Examination of site for approved staging areas, disposal sites, and documentation of existing conditions prior to contractor mobilization. Establish scope of work for site restoration and responsibilities.

5. Examination of site for condition and completion of areas adjacent to work area. Establish protection required for existing surfaces.

6. Examination of deck substrate conditions and finishes for compliance with requirements, including flatness and fastening.

7. Structural loading limitations of roof deck during and after roofing operations.

8. Base flashings, special roofing details, roof drainage, roof penetrations, equipment curbs, and condition of other construction that will affect roofing system.

9. Governing regulations and requirements for insurance and certificates if applicable.

10. Temporary protection requirements for roofing system during and after installation.

11. Work limitation(s) by contractor including; start times, end times, days of the week, noise mitigation, fume control and any part of the work that would affect normal building operations.

12. Trade coordination necessary for job completion.

13. Roof observation and repair procedures after roofing installation.

## 1.10 WARRANTY

A. Provide manufacturer's twenty (20)–year standard roof system warranty issued by the manufacturer. Warranty shall run from date of Substantial Completion. Manufacturer shall have a minimum AAA credit rating.

1. Warranty shall indicate that manufacturer has reviewed Drawings, specifications and conditions affecting the work.

B. Roofing installer's warranty shall be signed by Installer and shall cover entire work of this Section, including all components of membrane roofing system for a period of two (2) years.

## 2.0 PRODUCTS

### 2.1 MANUFACTURERS

A. Roof System: Johns Manville, P.O. Box 5108, Denver, CO 80217, 1-800-654-3103, www.jm.com, or approved equal.

### 2.2 MATERIALS AND RELATED ROOFING COMPONENTS

A. Thermoplastic Polyolefin Roofing Membrane - TPO

1. Fabric-Reinforced Thermoplastic Polyolefin Sheet: ASTM D 6878, uniform, flexible sheet formed from a thermoplastic polyolefin, internally fabric or scrim reinforced.

a. Thickness: 60 mils (1.52 mm), nominal

b. Exposed Face Color: Tan

B. Auxiliary Roofing Materials – Single Ply

1. General: Auxiliary materials recommended by roofing system manufacturer for intended use and compatible with membrane roofing.

a. Liquid-type auxiliary materials shall meet VOC limits of authorities having jurisdiction.

2. Sheet Flashing: Manufacturer's internally reinforced or scrim reinforced, smooth backed membrane with same thickness and color as sheet membrane.

3. Bonding Adhesive: Manufacturer's standard polymer-based bonding adhesive for membrane, and polymer-based bonding adhesive for base flashings.

a. Bonding Adhesive: JM TPO LVOC Membrane Adhesive

4. Fasteners: Factory-coated steel fasteners and metal or plastic plates meeting corrosion-resistance provisions in FMG 4470, designed for fastening

membrane to substrate, and acceptable to membrane roofing system manufacturer.

a. High-Load Fasteners:#15 fasteners with a corrosion resistant coating, #3 Phillips head and a drill point

b. High-Load Plates: 2-⅜" (60 mm), 20 gauge (0.9 mm) galvanized steel discs

5. Miscellaneous Accessories: Provide pourable sealers, preformed cone and vent sheet flashings, preformed inside and outside corner sheet flashings, T-joint covers, cover strips, and other accessories. Basis of Design: JM TPO Pourable Sealer A & B, JM TPO Pipe Boots, JM TPO Universal Corners, JM TPO Edge Sealant, JM TPO T-Joint Patch, JM TPO Membrane Cleaner, JM TPO Membrane Primer, JM TPO Membrane Primer (Low VOC), JM TPO Sealing Mastic, JM TPO Cover Tape, JM TPO Detail Membrane, JM TPO Peel & Stick 10" RPS, JM TPO Peel & Stick 6" RTS, JM TPO-Coated Metal, JM TPO Detail Membrane and JM Single Ply Caulk

C. Auxiliary Roofing System Components

1. Expansion Joints: Provide factory fabricated weatherproof, exterior covers for expansion joint openings consisting of flexible rubber membrane, supported by a closed cell foam to form flexible bellows, with two metal flanges, adhesively and mechanically combined to the bellows by a bifurcation process. Provide product manufactured and marketed by single-source membrane supplier that is included in the No Dollar Limit guarantee.

a. Vertical Expansion Joint Covers: Expand-O-Gard

2. Coping System: Manufacturer's factory fabricated coping consisting of a base piece and a snap-on cap. Provide product manufactured and marketed by single-source membrane supplier that is included in the No Dollar Limit guarantee.

a. Coping: Presto-Lock Coping

3. Metal Flashing Sheet: Metal flashing sheet is specified in Section 076000, Flashing and Sheet Metal

D. Cover board

1. High-Density Polyisocyanurate: ASTM C 1289, Type II, Class 4, Grade 3, High-density Polyisocyanurate technology bonded in-line to mineral-surfaced, fiber glass reinforced facers with greater than 140 lbs of compressive strength. For UL Class A wood deck applications.

a. Coverboard: Invisa FR Roof Board

b. Thickness: 1/4"

E. Roof Insulation

1. See section 072200 Roof and deck insulation

F. Insulation Accessories

1. See section 072200 Roof and deck insulation

G. Vapor Retarder

1. Self-Adhered SBS Vapor Retarder: Tri-laminate woven polyethylene, nonslip UV protected top surface; suitable for application method specified.

a. Vapor Retarder: JM Vapor Barrier SA

H. Substrate Board

1. Substrate Board: JM Securock Glass-Mat Roof Board, ASTM C 1177, glass-mat, water-resistant gypsum substrate, 5/8 inch (16 mm) thick.

## 3.0 EXECUTION

### 3.1 EXAMINATION

A. Verify that work of other trades which penetrate the roof deck or require personnel and equipment to traverse the roof deck have been completed.

B. Examine surfaces for inadequate anchorage, foreign material, moisture, and unevenness that would prevent the execution and quality of application and roofing system as specified.

1. Do not proceed with application of roofing system until defects are corrected.

### 3.2 PREPARATION

A. Inspect wood deck closely for the following:

1. Proper securement of panels to joists

2. Proper space between panels

3. Damaged panels

4. Delamination

5. Warping or rotting

B. Unacceptable panels should be brought to the attention of the General Contractor, Architect and District and must be corrected prior to installation of roofing system.

C. Examine underside of deck to ensure all joints are blocked.

D. Insure that wood blocking has been installed at perimeter and as required by specifications and primary roofing manufacturer.

E. Make sure that all counterflashing receivers, curbs, etc., are constructed in such a manner as to provide a minimum 8-inch base flashing height measured from the finished roof's surface to the top of the base flashing membrane.

## 3.3 INSTALLATION

A. Install all components of roofing system in accordance with manufacturer's recommended methods of installation.

B. Verify that all requirements for examination and preparation have been met before commencing installation

C. Substrate Board Installation

1. Install substrate board with long joints in continuous straight lines, perpendicular to roof slopes with end joints staggered between rows. Tightly butt substrate boards together.

2. Proceed with installation only after unsatisfactory conditions have been corrected.

D. Vapor-Retarder Installation

1. Install polyethylene-sheet vapor retarder as a loosely laid single layer over area to receive vapor retarder, side and end lapping each sheet a minimum of 2 inches (50 mm) and 6 inches (150 mm), respectively.

   a. Seal side and end laps with tape.

2. Laps: Accurately align roofing membrane sheets, without stretching, and maintain uniform side and end laps. Stagger end laps. Completely bond and seal laps, leaving no voids.

   a. Repair tears and voids in laps and lapped seams not completely sealed.

3. Completely seal vapor retarder at terminations, obstructions, and penetrations to prevent air movement into membrane roofing system.

4. Proceed with installation only after unsatisfactory conditions have been corrected.

E. Insulation Installation

1. Coordinate installation of roof system components so insulation and cover board is not exposed to precipitation or left exposed at the end of the workday.

2. Comply with roofing system manufacturer's written instructions for installation of roof insulation and cover board.

3. Install tapered insulation under area of roofing to conform to slopes indicated.

4. Install insulation boards with long joints in a continuous straight line with end joints staggered between rows, abutting edges and ends between boards. Fill gaps exceeding 1/4 inch (6 mm) with like material.

5. Install 2 or more layers with joints of each succeeding layer staggered from joints of previous layer a minimum of 6 inches (150 mm) in each direction.

6. Trim surface of insulation boards where necessary at roof drains so completed surface is flush and does not restrict flow of water.

7. Install tapered edge strips at perimeter edges of roof that do not terminate at vertical surfaces.

8. Preliminarily Fastened Insulation for Mechanically Fastened Systems: Install insulation with fasteners at rate required by roofing system manufacturer or applicable authority, whichever is more stringent.

   a. Fasten top layer to resist uplift pressure at corners, perimeter, and field of roof.

9. Loose Laid Insulation with Top Insulation Layer Mechanically Fastened: Loose lay insulation with staggered joints and secure top layer of insulation to deck using mechanical fasteners specifically designed and sized for fastening specified board-type to deck type.

10. Proceed with installation only after unsatisfactory conditions have been corrected.

F. Cover Board Installation

1. Coordinate installing membrane roofing system components so cover board is not exposed to precipitation or left exposed at the end of the workday.

2. Comply with membrane roofing system manufacturer's written instructions for installing roof cover board.

3. Install cover board with long joints of cover board in a continuous straight line with end joints staggered between rows, abutting edges and ends between boards. Fill gaps exceeding 1/4 inch (6 mm) with cover board.

    a. Cut and fit cover board within 1/4 inch (6 mm) of nailers, projections, and penetrations.

4. Trim surface of cover board where necessary at roof drains so completed surface is flush and does not restrict flow of water.

    a. Install tapered edge strips at perimeter edges of roof that do not terminate at vertical surfaces.

5. Preliminarily Fastened Insulation for Mechanically Fastened Systems: Install insulation with fasteners at rate required by roofing system manufacturer or applicable authority, whichever is more stringent.

6. Mechanically Fastened Cover Board: Install each layer of cover board and secure to deck using mechanical fasteners specifically designed and sized for fastening specified board-type roof cover board to deck type.

7. Proceed with installation only after unsatisfactory conditions have been corrected.

G. Roofing Membrane Installation, General

1. Install roofing membrane in accordance with roofing system manufacturer's written instructions, applicable recommendations of the roofing manufacturer and requirements in this Section.

2. Start installation of roofing membrane in presence of roofing system manufacturer's technical personnel.

3. Where roof slope exceeds 1/2 inch per 12 inches (1:24), contact the membrane manufacturer for installation instructions regarding installation direction and backnailing.

4. Cooperate with testing and inspecting agencies engaged or required to perform services for installing roofing system.

5. Coordinate installing roofing system so insulation and other components of the roofing membrane system not permanently exposed are not subjected to precipitation or left uncovered at the end of the workday or when rain is imminent.

a. Provide tie-offs at end of each day's work to cover exposed roofing membrane sheets and insulation with joints and edges sealed.

b. Complete terminations and base flashings and provide temporary seals to prevent water from entering completed sections of roofing system.

c. Remove and discard temporary seals before beginning work on adjoining roofing.

6. Proceed with installation only after unsatisfactory conditions have been corrected.

H. Adhered Roofing Membrane Installation

1. Install roofing membrane over area to receive roofing in accordance with membrane roofing system manufacturer's written instructions.

a. Unroll roofing membrane and allow to relax before installing.

b. Install sheet in accordance with roofing system manufacturer’s written instructions.

2. Accurately align roofing membrane and maintain uniform side and end laps of minimum dimensions required by manufacturer. Stagger end laps.

3. Bonding Adhesive: Apply polymer-based bonding adhesive to substrate and underside of roofing membrane at rate required by manufacturer and allow to partially dry before installing roofing membrane. Do not apply bonding adhesive to splice area of roofing membrane.

4. Apply roofing membrane with side laps shingled with slope of roof deck where possible.

5. Seams: Clean seam areas, overlap roofing membrane, and hot-air weld side and end laps of roofing membrane according to manufacturer's written instructions to ensure a watertight seam installation.

a. Test lap edges with probe to verify seam weld continuity. Apply lap sealant to seal cut edges of roofing membrane.

b. Verify field strength of seams a minimum of twice daily and repair seam sample areas.

i. Remove and repair any unsatisfactory sections before proceeding with Work.

6. Repair tears, voids, and lapped seams in roofing membrane that do not meet requirements.

7. Spread sealant or mastic bed over deck drain flange at deck drains and securely seal roofing membrane in place with clamping ring.

8. Proceed with installation only after unsatisfactory conditions have been corrected.

I. Base Flashing Installation

1. Install sheet flashings and preformed flashing accessories and adhere to substrates according to membrane roofing system manufacturer's written instructions.

2. Apply solvent-based bonding adhesive at required rate and allow to partially dry. Do not apply bonding adhesive to seam area of flashing.

3. Apply water-based bonding adhesive at required rate and allow to partially dry. Do not apply bonding adhesive to seam area of flashing.

4. Flash penetrations and field-formed inside and outside corners per manufacturer’s installation instructions.

5. Clean seam areas and overlap and firmly roll sheet flashings into the adhesive. Weld side and end laps to ensure a watertight seam installation.

6. Terminate and seal top of sheet flashings and mechanically anchor to substrate through termination bars.

7. Proceed with installation only after unsatisfactory conditions have been corrected.

II. Flashings and Accessories:

1. Provide a temporary waterproof seal at all membrane edges, penetrations, drains, etc. Unless complete flashings are installed immediately (same working day) following the membrane application.

2. Inspect walls, curb heights, counter-flashings, etc., and check for conformance with minimum base flashing height of eight (8”).

3. Bring non-conforming areas to the attention of the Architect and the Owner for correction.

4. Prepare and prime substrate surfaces per manufacturer's instructions.

a. Abrade and grind surfaces and clean metal surfaces to bare metal when recommended by the manufacturer.

b. Follow manufacturer's recommendations for required temperature of substrate and materials, and for filling of voids.

5. Prime all masonry, metal, or concrete surfaces from the top of the roof membrane to the termination of the flashing level with asphalt primer at the rate of one (1) gallon per 100 square feet or as recommended by the manufacturer.

6. Allow the primer to dry thoroughly.

7. Ensure that bonding surfaces to which the seal or flashing are to be placed are clean and free of moisture, dirt, grease, oil, loose material, foreign material, and debris.

8. Provide seals or flashing at penetrations of the roof membrane as required for a watertight roof system, and as indicated on the Drawings, and as approved by the roof system manufacturer for inclusion in the roofing warranty.

9. Horizontal Application of Flashing

a. Roof Field:

1) All flanges of roof jacks, collars, pan flashings, etc. shall be lead.

2) All flanges shall be a minimum of six (6) inches.

3) All flanges shall be set in a uniform bed of flashing cement on top of the completed roof assembly. Flanges shall be molded to the roof surface prior to installation of flashing membrane.

4) All flanges shall be covered with two (2) plies of polyester membrane set in Type IV asphalt bitumen.

i. The first ply shall cover the flange and extend a minimum of six (6) inches beyond the edge of the flange onto the roof surface.

ii. The second ply shall also cover the flange and extend a minimum of nine (9) inches beyond the edge of the flange onto the roof surface.

b. Roof Perimeter:

1) All flanges of sheet metal gravel stop or other perimeter metal flashing shall be a minimum of three (3) inches and maximum of four (4) inches.

2) The roof membrane assembly shall be installed to a point slightly beyond the roof edge. A suitable metal flashing of proper gauge and dimension shall be mechanically fastened to the wood nailer over the completed roof membrane assembly. The flange of the metal shall be set in a uniform bed of flashing cement prior to fastening.

3) Strip-in flange of the metal flashing with two (2) plies of polyester membrane set in Type IV asphalt bitumen.

i. The first polyester strip shall be six (6) inched in width.

ii. The second polyester strip shall be nine (9) inches in width.

10. Vertical Application of Flashing:

a. Base Flashing:

1) Base flashing height shall not be less than six (6) inches or more than fourteen (14) inches above the roof surface.

2) Starting a minimum of four (4) inches out from the toe of the cant on the roof surface, install one (1) ply of polyester membrane into a uniform mopping of Type IV asphalt bitumen. Extend the polyester membrane over the cant and up the vertical surface a minimum six (6) inches. Lap the end of each polyester ply a minimum of four (4) inches. Cover the polyester membrane with one (1) ply of modified mineral surfaced cap sheet also installed in a uniform mopping of Type IV asphalt bitumen. Lap the ends of the cap sheet a minimum of four (4) inches. (NOTE: End laps of the polyester membrane and mineral surfaced cop sheet shall be staggered, i.e., end laps shall not coincide.) Inside and outside corners shall be lapped a minimum of eight (8) inches..

3) As applicable, install base flashing membranes to outside edge of parapet walls.

4) Rub or brush each flashing ply thoroughly to assure adhesion to the vertical surface and to eliminate any air from being

trapped under the flashing membranes. The base flashing membranes shall be fully adhered to the roof, cant, and vertical surface so that in no place does the flashing membrane drape, bulge, curl, ridge, or wrinkle.

5) Mechanically fasten the base flashings at the top on six (6) inch centers using metal capped fasteners.

6) Install metal counter flashing and/or metal coping. Apply elastomeric caulking/sealant to reglet and to metal to metal joints.

11. Installation of Walkway Pads/Splash Block/Protection Pad:

a. Set the pads in a solid bed of plastic cement compatible with the cap sheet material.

b. Leave adequate space between pads so that positive drainage is not affected from installation.

## 3.4 FIELD QUALITY CONTROL

A. Field Samples:

1. Draw a quart sample from each load of bitumen arriving at the job site in the presence of the Inspector of Record, Architect and/or the City who will take it for laboratory analysis.

B. Test Strip (if requested by the Architect and/or the City:

1. When and where directed by the Architect and/or City, and before surfacing is applied to the completed membrane:

a. Cut a strip 3” wide by 40” long thru all plies of the roofing system. Number of such test strips may be as required.

b. After removal of the strip, immediately repair the area.

i. Lap each edge 12” and each succeeding ply lapping the preceding ply by at least 3” on all edges.

c. Approximate quantities of components within roofing membrane will be determined according to ASTM D3617.

2. Turn the test strips over to the Citys Representative for examination.

a. If the test strips indicate the roofing system complies with the specifications, the City shall bear the cost of the test strip work.

b. If the strips indicate the roofing system does not comply with the Specifications, the Contractor shall bear the cost of the test strip work, and shall repair or replace all roofing work as required to comply with the Specifications, at the Contractor's expense.

C. Non-Compliance:

1. Failure of the membrane samples or the test strip samples to meet the Specification requirements will be cause for rejection of the Work.

3.5 INSPECTION

A. After all roofing system work is completed, provide an inspection by the roofing system manufacturer's representative. Representative must be employed expressly as a technical employee and not concurrently function in a sales role. Provide, via the representative, documentation verifying that roofing system has been installed according to the Specifications.

3.6 CLEANING

A. Keep newly installed roofing membrane clean and new in appearance under the assumption that all areas of roofing are aesthetically essential. Contractor may be directed to remedy – and if no remedy available – replace, newly roofed areas that are not maintained as such during the balance of installation.

B. Restore all other building surfaces and areas affected by roofing application to same condition of aforementioned on day of job start.

C. Remove all debris from roof and staging areas.

**END OF SECTION**

# SECTION 076000 - FLASHING AND SHEET METAL

## 1.0 GENERAL

### 1.1 SUMMARY

A. This Section includes all labor, materials, equipment, operations, or methods listed, mentioned or scheduled on the plans and/or herein specified, including all incidentals necessary and required for completion of work under this Section.

B. Provide and install all sheet metal and all flashing, including items not specifically described in other Sections but required to prevent the penetration of water through the exterior shell of the building as shown on project Drawings, including:

1. Gutters and Rainwater Leaders
2. Stucco Reglets
3. Roof penetrations
4. Window and door flashing

### 1.2 RELATED SECTIONS

A. Documents affecting work of this Section include, but are not necessarily limited to, General Conditions, Special Conditions and Division 1 of these Contract Documents.

B. Division 7 - Thermal and Moisture Protection: All Sections

C. Section 092423, Portland Cement Stucco

D. Section 099100, Painting

### 1.3 REFERENCES

A. American Architectural Manufacturers Association (AAMA):

1. AAMA 603.8 – Performance Requirements and Test Procedures for Pigmented Organic Coatings on Extruded Aluminum.

2. AAMA 605.2 – Specification for High Performance Organic Coatings on Architectural Extrusions and Panels.

3. AAMA 611 – Standards for Anodized Architectural Aluminum.

B. American Society for Testing and Materials (ASTM):

1. ASTM A525 - Standard Specification for General Requirements for Steel Sheet, Zinc-Coated (Galvanized) by the Hot-Dip Process.
2. ASTM A653/A653M - Standard Specification for Steel Sheet, Zinc-Coated (Galvanized) for Zinc-Iron Alloy-Coated (Galvannealed) by the Hot Dip Process.
3. ASTM A792 - Standard Specification for Steel Sheet, 55% Aluminum-Zinc Alloy Coated by the Hot-Dip Process.
4. ASTM B209/209M - Standard Specification for Aluminum and Aluminum-Alloy Sheet and Plate
5. ASTM B32 - Standard Specification for Solder Metal.
6. ASTM B749 - Standard Specification for Lead and Lead Alloy Strip, Sheet, and Plate Products

B. Sheet Metal and Air Conditioning Contractors National Association, Inc. (SMACNA):

1. Architectural Sheet Metal Manual, current edition.

C. National Roofing Contractors Association (NRCA):

1. Roofing and Waterproofing Manual, current edition.

1.5 SUBMITTALS

A. Comply with provisions of Section 013300, Submittal Procedures.

B. Product Data: submit manufacturer's product information, including installation instructions, product specifications and standard details, including manufacturer's standard range of colors and finish options.

1. Submit color chips for Architect's review and selection.

C. Samples: submit the following for Architect's review and acceptance:

1. Gutter and downspout sample: 12" long, full section.
2. Hanger brackets, braces, and stiffeners: one of each type.
3. Fasteners: six of each type.

D. Shop Drawings: submit Shop Drawings and installation details showing methods of installation, sections and details, flashings and all other accessories.

1. Shop Drawings must show interface with all related work of other trades and proposed identification of component parts and finishes.

2. Submit large-scale Shop Drawings (minimum 3/4"=1'-0').

E. Warranty: submit manufacturer's standard warranty information for review and acceptance. Warranty shall cover corrosion of metal components.

1. Installer's warranty shall cover fastener failure, water penetration at joints or failure to drain.

1.6 DELIVERY, STORAGE AND HANDLING

A. Comply with manufacturer's recommendations for storage and handling.

B. Use all means necessary to protect flashing and sheet metal before, during, and after installation and to protect the installed work and materials of other trades.

C. Stack materials to prevent twisting, bending and abrasion, and store in a manner that allows for proper ventilation.

D. Slope materials and components to ensure proper drainage.

E. Prevent contact with materials that may cause discoloration or staining.

F. In the event of damage, immediately make all repairs and replacements necessary for the approval of the Architect at no additional cost to the City.

1.7 QUALITY ASSURANCE

A. Qualifications of Manufacturer: Manufacturer shall specialize in manufacturing products specified in this Section.

B. Qualifications of Installers:

1. Installer shall be thoroughly experienced in the work of this Section, including all materials and methods required, and shall provide at least one person who shall be present at all times during the execution of work of this Section.

a. This qualified person shall direct the entire flashing and sheet metal fabrication and installation and shall ensure materials are installed in accordance with all pertinent local codes and regulations, including SMACNA's Architectural Sheet Metal Manual, current edition at time of construction.

C. Field Measurements: Verify all field measurements prior to fabrication of materials.

**2.0 PRODUCTS**

## 2.1 MANUFACTURERS

A. Fry Reglet Architectural Metals, www.fryreglet.com

## 2.2 MATERIALS

A. General: Where sheet metal is required and no material or gauge is indicated on the Drawings, furnish and install the highest quality commensurate with the referenced standards.

1. Galvanized Steel: G90 (Z275) zinc coating; 24 gauge thick steel, unless otherwise shown (ASTM A653/A653M).

2. Plain Aluminum Sheet: 3003 alloy, H-14 temper; 0.032" thick (ASTM B209/209M)

3. Lead: 2.5 lb/sq. ft. (ASTM B749)

4. Galvanized Iron:

   a. Sheet metal or iron shall be a standard brand of openhearth copperbearing steel, copper-molybdenum iron, or pure iron sheets.

5. Zinc Coating:

   a. All galvanized sheets shall have a zinc coating applied by hot dip process to all surfaces per ASTM A653.
   b. Zinc coating shall weigh not less than 1-1/4 ounces per square foot nor more than 1-1/2 ounces per square foot of surfaces covered and shall conform with ASTM A525.

## 2.3 ACCESSORIES

A. Gutters: See Section 074113, Metal Roof Panels

1. Type: Standard G style beveled box per SMACNA

2. Size: see Drawings

3. Gauge: 24 gauge

4. Metal: same as roofing panels

B. Self-Adhering Membrane: Self-adhering rubberized asphalt laminated to cross-laminated polyethylene film

C. Primer: Zinc molybdate type.

D. Protective Backing Paint: Zinc molybdate alkyd.

E. Sealant: Type 4 sealant specified in Section 079000.

1. At copings (flat lock seams): Butyl, Type 3 as specified in Section 079000.

2. All other locations: Polyurethane, Type 1 as specified in Section 079000.

F. Plastic Cement: Type I (ASTM D4586)

G. Reglets: Surface mounted, galvanized steel.

H. Solder: use type suitable for application and material being soldered (ASTM B32).

I. All other materials not specifically described but required for a complete and proper installation of flashing and sheet metal shall be new, first quality of their respective kinds, and subject to the approval of the Architect.

2.4 FABRICATION

A. Form all sheet metal accurately to the dimensions and shapes required, finishing all molded and broken surfaces with true, sharp, straight lines and angles, free from distortion or defects.

B. Cleats shall be fabricated of the same material as sheet metal, interlocking with sheet.

C. Form pieces in longest possible lengths.

D. Hem exposed edges on underside ½"; miter and seam corners.

E. Form material with flat lock seams, except where otherwise indicated. At moving joints, use sealed lapped, bayonet-type or interlocking hooked seams.

F. Fabricate corners from one piece with minimum 18" long legs; solder for rigidity, seal with sealant.

G. Fabricate vertical faces with bottom edge formed outward ¼" and hemmed to form drip.

H. Flashings shall allow toe to extend 2 inches over roofing. Return and brake edges.

I. Seal all metal joints.

2.5 FINISHES

A. Factory Finish Class 1 Natural Anodized Finish: Clear anodic coating (AAMA 611 [AA-MM12C22A41]) not less than 0.7 mils thick.

B. Factory Finish Class 1 Color Anodized Finish: Integrally colored anodic coating (AAMA 611 [AA-MM12C22A42]) not less than 0.7 mils thick.

C. Factory Finish Polyvinylidine Fluoride coating: Multiple coat, thermally cured, fluoropolymer system conforming to AAMA 605.2.

D. Factory Finish Primer Coat: Finish concealed side of metal sheets with primer compatible with finish system, as recommended by finish system manufacturer.

## 3.0 EXECUTION

### 3.1 SURFACE CONDITIONS

A. Inspection:

1. Prior to all work of this Section, carefully inspect the installed work of other trades and verify that all such work is complete to the point where this installation may properly commence.

2. Verify that flashing and sheet metal may be installed in accordance with the original design, the approved Shop Drawings, and the referenced standards.

B. Correction:

1. In the event of discrepancy, immediately notify the Architect.
2. Do not proceed with installation in areas of discrepancy until all such discrepancies have been resolved.

### 3.2 INSTALLATION

A. General:

1. Install starter and edge strips and cleats before beginning installation.

2. Surface mounted reglets shall be installed to lines and levels indicated on drawings.

3. Concealed metal surfaces shall be painted with protective backing paint to minimum dry film thickness of 15 mil..

B. Expansion:

1. Form, fabricate, and install all sheet metal so as to adequately provide for expansion and contraction in the finished work.

C. Weatherproofing:

1. Finish watertight and weather tight where so required.

2. Make all lock seam work flat and true to line, and sweated full of solder.

3. All flat lock seams and lap seams, when soldered, shall be at least 1/2 inch wide.

4. Lap seams not soldered shall lap according to pitch but in no case less than three inches.

5. Make all flat and lap seams in direction of flow.

D. Joints:

1. Join parts with rivets or sheet metal screws where necessary for strength or stiffness.

2. Provide suitable watertight expansion joints for all runs of more than 40 feet except where closer spacing is indicated on the Drawings or required for proper installation

E. Nailing:

1. Where ever possible, secure metal by means of clips or cleats without nailing through the metal.

2. In general, space all nails, rivets, and screws not more than eight inches apart and, where exposed to the weather, use lead washers.

3. For nailing into wood, use barbed roofing nails 1-1/4 inches long by 11 gauge.

4. For nailing into concrete, use drilled plugholes and plugs.

F. Embedment:

1. Embed all metal in connection with roofs in a solid bed of caulking, using the materials and methods described in Section 079000, Sealants and Caulking.

G. Soldering:

1. General:

a. Thoroughly clean and tin all joint materials prior to soldering.

b. Perform all soldering slowly with a well heated copper in order to heat the seams thoroughly and to completely fill them with solder.

c. Perform all soldering with a heavy soldering copper of blunt design, properly tinned for use.

d. Make all exposed soldering on finished surfaces neat, full flowing, and smooth.

3.3 TESTS

A. Upon request of the Architect, demonstrate by hose or standing water that all sheet metal is completely watertight.

3.4 CLEAN UP

A. Upon completion, remove all debris resulting from work of this Section.

3.5 WARRANTY

A. The products delivered shall be free of defects.

B. Manufacturer's standard performance warranty, as available for specified installation and environmental conditions.

**END OF SECTION**

# SECTION 076113 – STANDING SEAM METAL ROOFING SYSTEM

## 1.0 GENERAL

### 1.1 SUMMARY

A. This Section includes all labor, materials, equipment, operations, or methods listed, mentioned or scheduled on the plans and/or herein specified, including all incidentals necessary and required for completion of work under this Section.

B. Provide and install factory-formed metal roof panels, including flashings, gutters and trim as shown on project Drawings and as specified herein.

C. Section includes but is not limited to the following:

1. Pre-finished roof panels and associated flashings, panel attachment devices.
2. Waterproof membrane
3. Non-combustible cover board
4. Thermal insulation
5. Non-combustible protection board
6. Vapor barrier
7. Slip sheet (if required)
8. Pre-finished gutters, rain water leaders and splash pans

### 1.2 RELATED SECTIONS

A. Documents affecting work of this Section include, but are not necessarily limited to, General Conditions, Special Conditions and Division 1 of these Contract Documents.

B. Division 7 – Thermal and Moisture Protection: All Sections

### 1.3 REFERENCES

A. American Society for Testing and Materials (ASTM):

1. ASTM A653/A653M – Standard Specification for Steel Sheets, Zinc-Coated (Galvanized) or Zinc-Iron Alloy-Coated (Galvannealed) by the Hot-Dip Process.
2. ASTM A792/A792M – Standard Specification for Steel Sheet, 55% Aluminum-Zinc Alloy Coated by the Hot Dip Process.

3. ASTM B209 – Standard Specification for Aluminum and Aluminum-Alloy Sheet and Plate.

4. ASTM D523-89 – Standard Test Method for Specular Gloss

5. ASTM D1005 – Standard Test Method for Measurement of Dry-Film Thickness of Organic Coatings Using Micrometers

6. ASTM D2244 – Standard Practice for Calculation of Color Tolerances and Color Differences From Instrumentally Measured Color Coordinates

7. ASTM D2247 – Standard Practice for Testing Water Resistance of Coatings in 100% Relative Humidity.

8. ASTM E1592 – Standard Test Method for Structural Performance of Sheet Metal Roof and Siding Systems by Uniform Static Air Pressure Difference

9. ASTM E1680 – Standard Test Method for Determining the Rate of Air Leakage Through Exterior Windows, Curtain Walls and Doors Under Specified Pressure Differences Across the Specimen.

10. ASTM E1646 – Standard Test Method for Water Penetration of Exterior Windows, Curtain Walls and Doors by Uniform Static Air Pressure Difference.

11. ASTM G90 – Standard Practice for Performing Accelerated Outdoor Weathering of Non-Metallic Materials Using Concentrated Natural Sunlight.

B. Architectural Aluminum Manufacturers Association (AAMA):

1. AAMA 501.2 Field Check of Metal Curtain Walls for Water Leakage.

C. Sheet Metal and Air Conditioning Contractors National Association (SMACNA):

1. Architectural Sheet Metal Manual

D. National Roofing Contractors Association (NRCA).

E. Factory Mutual (FM): FM Class 1-90

F. Underwriters Laboratories, Inc. (UL):

1. UL 580 – Standard for Tests for Uplift Resistance of Roof Assemblies

2. UL 2218 – Standard for Impact Resistance of Prepared Roof Covering Materials

G. California Building Code: Title 24, Part 2

## 1.4 SUBMITTALS

A. Comply with provisions of Section 013300, Submittal Procedures.

B. Product Data: Submit manufacturer's product data for all materials specified herein, including product sheet(s) for specified materials, installation instructions and maintenance instructions.

C. Shop Drawings: Submit Shop Drawings showing layout, profiles and product components for all parts of entire roof, including connections, anchorage, accessories, and finish colors and textures. Shop Drawings shall also include seam locations, transitions and other provisions required for thermal expansion and contraction.

1. Provide details for assembly of all parts into a complete system with adjacent materials fully dimensioned and noted.

a. Indicate roof terminations, clearly showing flashings and change of direction caps.

b. Clearly indicate locations of field-applied sealant.

c. Indicate profile and gauges of interior and exterior sheets, hold-down clips, fasteners and accessories, and indicate their locations, shapes and methods of attachment.

d. Indicate layout of roofing panels and roof panel sizes, including custom-fabricated roofing panels if indicated.

e. Indicate materials required for construction activities of this Section not supplied by manufacturer of products used herein.

D. Samples: Submit selection and verification samples for each type of caulking, sealants, trim and flashings, and finishes, colors and textures.

1. Selection Samples: For each product requiring color selection, submit 2 sets of manufacturer's sample chips representing full range of colors and finishes available.

2. Verification Samples: For each color and finish selected, submit 2 chips indicating match to selected color and finish.

a. Submit sample of specified color, 3" x 5", for Architect's review.

E. Quality Assurance Submittals: Submit the following:

1. Manufacturer Certificates: Product certificates signed by manufacturer certifying materials comply with specified performance characteristics and physical requirements.

2. Manufacturer's Installation Instructions.

3. Manufacturer's Field Reports

F. Design Calculations:

1. Submit calculations to show that the basic system meets the uplift requirements. These calculations shall correlate the general data from the manufacturer to the specific conditions of the project. Include calculations for:

a. Wind load uplift design pressure at specified roof locations using specified design loads.

b. Panel clip spacing and allowable load per clip.

c. Fastening of panel clips to structure (metal deck)

d. Calculations shall be stamped by a structural engineer registered in the State of California.

G. Closeout Submittals: Submit the following in accordance with Section 017700, Contract Closeout Procedures:

1. Operation and Maintenance Data for installed products. Include methods for maintaining installed products and precautions against cleaning materials and methods detrimental to finishes and performance.

2. Warranty documents specified herein.

3. Project Record Documents for installed materials.

1.5 DELIVERY, STORAGE AND HANDLING

A. Deliver materials in manufacturer's original, unopened, undamaged containers with identification labels intact.

1. Identify fabricated components with UL 90 label where appropriate.

B. Store materials in manufacturer's unopened packaging in a dry, above-ground location until installation. Protect materials from exposure to harmful conditions.

1. Roofing panels, trim and accessories shall be bundled and packaged in waterproof wrapping paper.

2. Stack pre-finished material to prevent twisting, bending, abrasion, scratching and denting. Elevate one end of each skid to allow for moisture runoff.

3. Maintain dry, heated storage area for materials until they are installed.

C. Do not overload roof structure with stored materials and do not permit material storage or traffic on completed roof surfaces.

## 1.6 QUALITY ASSURANCE

A. Installer Qualifications: Installer shall be experienced in performing work of this Section and shall specialize in the installation of work similar to that required for this project.

1. Installer shall be currently approved by the manufacturer of the roofing system.

2. Installer shall use adequate numbers of skilled workers who are thoroughly trained and experienced in the necessary crafts and who are completely familiar with the specified requirements and the methods needed for proper performance of the work of this Section.

3. Certificate: When requested, submit certificate indicating qualification.

B. Installer-Manufacturer Review: The Installer shall review the Drawings and Project Manual with an agent of the roofing materials manufacturer and obtain his agreement that the selected system is proper, compatible and adequate for application shown.

1. Upon completion of the installation, and as a condition of its acceptance, deliver to the Architect a letter signed by a legal representative of the preformed roofing manufacturer stating that he/she has inspected the surfaces prior to application of the preformed roofing, the materials and methods used for the installation and that all surfaces, materials, and methods comply with the recommendations of the manufacturer.

C. Sheet Metal Industry Standard: Comply with Sheet Metal and Air Conditioning Contractors National Association (SMACNA) Architectural Sheet Metal Manual.

D. Source Quality: Metal panel products shall be from a single manufacturer.

E. Mock-Ups: Install mock-up at project site using acceptable products and manufacturer approved installation methods. Obtain Architect and City's acceptance of finish color, texture, pattern and workmanship standard.

1. Include eave, ridge, valley, gable and hip conditions.

2. Mock-Up Size: 4' x 4'.

3. Maintenance: Maintain mock-up during construction for workmanship comparison.

a. Submit mock-up to Architect when no longer required on jobsite.

4. Incorporation: Mock-up may be incorporated into final construction upon Architect's approval.

## 1.7 DESIGN REQUIREMENTS

A. Metal roof systems shall be provided as complete systems, under one responsibility.

All components of the metal roofing panels shall be supplied by one manufacturer.

1. Panels shall be pre-formed to the final profile and configuration in the factory, except for field formed seams. Panels shall be continuous lengths to produce the lap pattern as shown for each roof. Ribs of adjoining sheets shall be in continuous contact from eave to ridge.

2. Field roll-forming shall not be permitted, except for minor flashing and transition pieces.

3. There shall be no exposed or penetrating fasteners except where shown on approved shop drawings. Fasteners shall be stainless steel, or corrosion resistant coated steel. There shall be a minimum of two fasteners per panel clip.

4. Panel seams shall be of the double lock design. Field formed seams shall be mechanically locked by panel manufacturer's locking tool. Seam shall include a continuous factory applied sealant.

5. Roof panel anchor clips shall be concealed and designed to allow for longitudinal thermal movement of the panels, except where specific fixed points are indicated. P anel end laps shall be continuously cleated and allow for thermal movement.

B. Design Loads

1. Wind Uplift:

a. Design load applications shall be in accordance with California Building Code, and with recognized methods of evaluation.

b. Design uplift pressures for the roof system shall be computed and applied using a basic wind speed of 70 mph and Exposure C. Roof system and attachments shall resist the following minimum wind loads, or greater if required to comply with specified windstorm classification:

| Location | Negative Pressure (psf) |
|---|---|
| 1) At eaves | 36.5 psf within 10 ft |
| 2) At rakes | 36.5 psf within 10 ft |
| 3) At ridges | 36.5 psf within 10 ft |
| 4) At overhangs | 44.5 psf within 10 ft |
| 5) At central areas | 20.6 psf within 10 ft |

c. Design uplift force for each connection assembly shall be that pressure given for the area under consideration, multiplied by the tributary load are of the connection assembly, and multiplid by a safety factor of 2.0.

2. Thermal Effects: Roof panels shall be free to move in response to expansion and contraction forces resulting from maximum local temperature variations, based on a range of 10° F minimum to 170° F maximum.

1.8 WARRANTY/GUARANTEE

A. Prior to completion of project submit, for City's acceptance:

1. Panel manufacturers' 20 year warranty on finish durability (note warranty exclusions for corrosive conditions)

2. Panel manufacturer's 20 year Weather Tie Warranty

3. Panel manufacturer's and Subcontractor's 20 year guarantee against structural defects or corrosion, workmanship and leaks.

**2.0 PRODUCTS**

2.1 ROOF PANEL MANUFACTURER

A. Morin a Division of Kingspan, Morin West, 10707 Commerce Way, Fontana, CA 92337, TEL: 1-909-428-3747, FAX: 1-909-428-6433, 1-877-638-3266, Local representative: Griggs Systems, Inc. Ph: 1650-458-9608, FAX: 1-650-458-9609, www.morincorp.org or approved equal.

2.2 MATERIALS

A. SLR Roofing system

1. Panels shall be fabricated in full lengths from ridge to eave without end laps.

2. Size: 2" high seam by 18" width as indicated on Drawings.

3. Panel Surface: Flat pan.

4. Material: Non-Embossed Prefinished Galvalume 40 ksi finished steel sheet conforming to ASTM A792.

a. Gauge: 24 gauge

B. Accessories:

1. Gutters:

a. Type: Provide profile shown on drawings

b. Metal: same as roofing panel standard

c. Gauge: 24 gauge

2. Trim:

a. Manufacturer's standard sheet metal matching specified roof panel material, gauge and finish, break-formed to profiles indicated on Drawings, including but not limited to:

1) Copings and Caps

2) Gutters and downspouts; see Section 076000, Flashing and Sheet Metal

3) Termination and transition strips

4) Battens: 1" deep profile for snap-on fit to standing seams at panel intersections.

b. Color: "Champagne Metallic"

3. Clips and Fasteners: Supply items required for installation of panels in accordance with manufacturer's installation instructions and other indicated items.

a. All fasteners shall be galvanized steel or stainless steel and shall be concealed, except as shown on Drawings.

b. Clips to panel shall have UL 90 classification based on UL 580 test methods by manufacturer.

4. Sealants: as recommended by manufacturer

2.3 WATERPROOF MEMBRANE

A. Cold applied, self-adhering reinforced polyethylene film with rubberized asphalt adhesive coating on one side (ASTM D1970)

1. W R Grace and Co. "Ultra" or approved equal.

2.4 INSULATION

A. General

1. Comply with California Energy Code, CCR Title 24, Part 6, Subchapter 2, Section 118: Certification that insulation complies with California Quality Standards for Insulating Material (CCR Title 20, Chapter 4, Article 3).

2. Comply with California Building Code, Section 707: Flame spread rating not to exceed 25 and smoke density not to exceed 450 when tested in accordance with UBC Standard 8-1.

B. Extruded Polystyrene: Type IV (ASTM C578), 25 psi minimum compressive strength. 3 inch thick. Two layers required for total LTTR value of 30. Cold adhesive applied.

1. Dow "Styrofoam Deckmate Plus" or approved equal.

2. Accessories:
   a. Joint tape: Protecto-Wrap BT20; 3M Contractor Sheathing Tape No. 8086; Polyguard Products or approved equal

   b. Adhesive for Extruded Polystyrene Insulation: Henry Co. "111 InsulBond Roof Insulation Adhesive" or approved equal

2.5 VAPOR BARRIER

A. Maximum 0.05 perms (ASTM E96). Minimun 20 mil thickness. Reinforced self-adhering membrane specifically intended for use in roof assemblies. Class A flame spread rating (ASTM E84).

1. W R Grace and Co. "Grace Select" or approved equal.

2.6 NON-COMBUSTIBLE PROTECTION BOARD (ABOVE VAPOR BARRIER, BELOW INSULATION)

A. Glass mat faced exterior gypsum board, ¼ inch thick (ASTM C1177)

1. Georgia Pacific "Dens Deck DuraGuard" or approved equal.

2. Accessories:

   a. Fasteners: Stainless steel, self tapping, minimum length required to penetrate deck.

2.7 NON-COMBUSTIBLE COVER BOARD (ABOVE INSULATION, BELOW WATERPROOF MEMBRANE)

A. Glass mat faced exterior gypsum board, ½ inch thick (ASTM C1177)

1. Georgia Pacific "Dens Deck DuraGuard" or approved equal.

2. Accessories:

   a. Fasteners: Stainless steel, self tapping, minimum length required to penetrate deck.

2.8 FABRICATION – ROOF PANELS AND RELATED COMPONENTS

A. Roofing panels shall be factory fabricated from coil stock in continuous lengths with no striations (flat pan) and with no horizontal seams. Panels shall be prefinished with a fluorocarbon coating.

1. Site formed panels are not permitted.

B. Provide dissimilar metal protection at all changes in materials.

C. Finish: Exterior finish shall be a two-coat roll-coated system consisting of the following:

1. Primer with a dry film thickness of .02-.03 mil

2. Color finish shall be Kynar 500 or Hylar 5000, minimum 70% polyvinylidene fluoride(PVDF) acrylic resins (0.8 mil minimum dry thickness applied over a 0.2 mil minimum manufcturer's recommendations.

a. Color: Champagne 5VMY59693P to match existing building.

## 3.0 EXECUTION

### 3.1 EXAMINATION

A. Verification of Conditions:

1. Verify substrate conditions which have been previously installed under other Sections are acceptable to receive work of this Section.

a. Panel support systems shall be ready for construction activities of this Section and within specified tolerances.

b. Rough-in utilities shall be in correct locations.

2. Submit written notification of any unacceptable conditions that will prevent the work of this Section from being properly installed.

a. Transmit 2 copies of installer's report to Architect within 24 hours of receipt.

3. Delay construction activities of this Section until unacceptable conditions have been corrected.

4. Beginning construction of work of this Section indicates installer's acceptance of conditions.

A. Field Measurements: Verify actual measurements/openings by field measurements before fabrication; show recorded measurements on Shop Drawings.

1. Coordinate field measurements and fabrication schedule with construction progress to avoid construction delays.

2. Make and be responsible for all field dimensions necessary for proper fitting and completion of work. Report discrepancies to Architect before proceeding.

### 3.2 PREPARATION

A. Coordination: Coordinate metal roofing with other work, drainage, flashing and trim, deck substrates, parapets, copings, walls, and other adjoining work to provide a noncorrosive and leakproof installation.

B. Dissimilar Metals: Prevent galvanic action of dissimilar metals.

3.3 INSTALLATION

A. Vapor Barrier: Install in conjunction with protection board, using the board to protect the vapor barrier from damage or distortion because it is partly unsupported over the metal deck. Install vapor barrier continuously over entire surface to be covered by metal roof system. Install parallel to slope, weather lapping shingle style from eave up to ridge. Weather lap all joints minimum 2 inches. To the maximum extent possible, locate lap joints that are parallel to metal deck flutes on top of deck flutes. All lap joints are to be tightly adhered and sealed as recommended by vapor barrier manufacturer.

B. Non Combustible Protection Board: Install with joints staggered, long edges parallel to metal deck flutes. Long edges shall bear on deck flutes; trim boards as required. Fasten in accordance with approved design. Fasteners are to be located only to penetrate top flute.

C. Insulation: All insulation is to be adhesive applied. Install first layer of extruded polystyrene insulation over protection board; lay second layer of insulation in adhesive with joints staggered from first layer; lay boards with edges in moderate contact without forcing and seal all joints with joint tape at each layer.

D. Non Combustible Protection Board: Install with joints staggered, long edges perpendicular to metal deck flutes. Fasten in accordance with approved design. Fasteners are to be located only to penetrate top flute.

E. Waterproof Membrane: Install continuously over entire surface to be covered by metal roof system. Weather lap joints a minimum of 2 inches or as recommended by membrane manufacturer. Prime entire surface of cover board and seal all joints with tape of type required by membrane manufacturer.

1. Where sloope of roof is less than ¼” in 12 inches, install a second layer of waterproof membrane, with joints offset by 1/3 from first layer.

F. Install gutters, downspouts and metal splash pans.

G. Standing Seam Panel Installation:

1. Comply with manufacturer’s product data, recommendations and installation instructions for substrate verification, preparation requirements and installation.

a. Install metal roofing panels to profiles, patterns and drainage as indicated on Shop Drawings and as required for leakproof installation. Provide for structural and thermal movement of work.

1) Seams: Provide uniform, neat seams.

2) Fasteners: Conceal fasteners where possible in exposed work. Cover and seal fasteners and anchors for watertight and leakproof installation.

3) Sealant-Type Joints: Provide sealant-type joint where indicated for leakproof installation. Form joints to conceal sealant. Comply with Section 079000, Sealants and Caulking for sealant installation.

2. Strippable Film: Remove manufacturer's protective film, if any, from surfaces of roofing panels.

3. Install panels plumb, true and in correct alignment with structural framing, in accordance with Shop Drawings and manufacturer's printed installation instructions.

4. Install panels in horizontal installations using manufacturer's concealed fastening system only; sight-exposed fasteners are prohibited.

5. Install panels in vertical installations using manufacturer's concealed fastening system or noncorroding fasteners color-matched to panel.

6. Install trim using concealed fasteners where possible; sight-exposed non-corroding fasteners color-matched to trim are permitted on vertical surfaces only.

## 3.4 FIELD QUALITY REQUIREMENTS

A. Site Tests (Post-Installation Testing): the City reserves right to perform post-installation testing of installed metal panel installation.

B. Manufacturer's Field Services: Upon City's request, provide manufacturer's field service consisting of product use recommendations and periodic site visit for inspection of product installation in accordance with manufacturer's instructions.

## 3.5 ADJUSTMENT AND CLEANING

A. Leave entire work in neat, orderly, clean and acceptable condition and properly remove all debris created by this work at the end of each work day.

B. At conclusion of project and prior to occupancy, remove strippable coating and perform dry wipe-down cleaning of panels. Thoroughly wash dust and dirt from all roofing surfaces in strict conformance with the recommendations of panel manufacturer and obtain acceptance from Architect.

C. Repair or replace damaged installed products and remove construction debris from project site and legally dispose of debris.

D. Take special care to prevent scratching of finish coating. Touch up all damaged finish with primers and Kynar fluorocarbon touch-up paint.

3.6 PROTECTION

A. Protect installed products and finished surfaces from damage during and after construction, and protect the installed work of related trades.

B. In the event of damage, immediately make all necessary repairs and replacements to the approval of the Architect and at no additional cost to the City.

1. Repair materials having minor damage to finish in accordance with panel manufacturer's recommendations.

2. Architect shall be sole judge of acceptability of repair to damaged finishes; replace products having rejected repairs.

C. Exposed finishes shall be free from scratches, dents, permanent discolorations and other defects in workmanship or material.

**END OF SECTION**

# SECTION 079000 - SEALANTS AND CAULKING

## 1.0 GENERAL

### 1.1 SUMMARY

A. This Section includes all labor, materials, equipment, operations, or methods listed, mentioned or scheduled on the plans and/or herein specified, including all incidentals necessary and required for completion of work under this Section.

B. Provide and install all sealants and caulking where required as shown on project Drawings and as specified herein.

1. Provide a positive barrier against the penetration of air and moisture at joints between items where caulking is essential to the continued integrity of the barrier.

2. Such caulking will normally be performed under the work of various Sections but shall be performed in strict accordance with the provisions herein.

### 1.2 RELATED SECTIONS

A. Documents affecting work of this Section include, but are not necessarily limited to, General Conditions, Special Conditions and Division 1 of these Contract Documents.

B. Section 088100 - Glass and Glazing

C. Division 9 - Finishes

D. Division 22 - Mechanical

E. Division 26 - Electrical

### 1.3 REFERENCES

A. American Society for Testing and Materials (ASTM):

1. ASTM E90 & C919

2. ASTM C834, Type C and Type OP, Grade -18 degrees C.

3. ASTM C1193, Standard Guide for Use of Joint Sealants.
4. ASTM C1472, Standard Guide for Calculating Movement and Other Effects When Establishing Sealant Joint Width.

### 1.4 SUBMITTALS

A. Comply with provisions of Section 013300, Submittal Procedures.

B. Before work is started, a sample opening of each type of joint shall be caulked where directed. Samples shall show materials, workmanship, bond, and color or caulking material as selected for the work. The materials, workmanship, bond, and color of the caulking work throughout the project shall match that of the approved sample joints.

C. Warranty: Include coverage for installed sealants and accessories failing to achieve watertight seal, exhibit loss of adhesion or cohesion, and sealants which do not cure.

## 1.5 DELIVERY, STORAGE AND HANDLING

A. Storage:

1. Store all caulking materials and equipment under conditions recommended by its manufacturer.

2. Do not use materials stored for a period of time exceeding the maximum recommended shelf-life of the material.

3. Sealant must be stored in original unopened container between 50 and 80 degrees F.

B. Protection:

1. Use all means necessary to protect caulking materials before, during, and after installation and to protect the installed work and materials of other trades.

C. Repairs:

1. In the event of damage, immediately make all repairs and replacements necessary to the approval of the Architect and at no additional cost to the City.

## 1.6 QUALITY ASSURANCE

A. Qualifications of Applicators:

1. Applicator of caulk and sealants shall be fully qualified with a minimum of five years' prior experience in similar work and who have been specially trained in the techniques of caulking and who are completely familiar with the written recommendations of the manufacturer of the material being used.

2. Indication of lack of skill on the part of caulking installers shall be sufficient grounds for the Architect to reject installed caulking and to require its immediate removal and complete recaulking at no additional cost to the City.

B. Qualification of Manufacturer(s):

1. All caulking and sealant materials shall be new stock, manufactured not more than six months prior to use in the project.

2. Whenever the materials are specified by the name of the manufacturer, it shall be taken as intended to mean and specify the materials described, or any other approved made equal thereto, for the purpose intended. the Architect shall be the sole judge as to such equality.

3. Where mixing is required, mix no more material than can be installed within four hours maximum and in amounts not to exceed 5-gallon-unit increments.

1.7 ENVIRONMENTAL REQUIREMENTS

A. Provide materials that are low-emitting.

1. Materials shall meet the limits of the State of California DHS Standard Practice for the Testing of Volatile Organic Compounds or shall be identified by the following certification programs:

a. Greenguard Environmental Institute

b. Scientific Certification Systems

2. Provide cut sheet and MSDS showing VOC limits for each adhesive used in the building.

a. Adhesives must meet and/or exceed VOC limits of South Coast Air Quality Management District Rule #1168.

3. Provide cut sheet and MSDS showing VOC limits for each sealant used in the building.

a. All sealants used as filler must meet or exceed Bay Area Resources Board Re. 8, Rule 51.

b. Limits on VOCs for sealants for architectural use are 250 grams/liter (different levels for roadways, roofing material installation, PVC welding, and other).

c. Limits on VOCs for sealant primers for architectural-nonporous are 250 grams/liter; for architectural-porous are 775 grams/liter.

## 2.0 PRODUCTS

2.1 MANUFACTURERS

A. ER Systems

B. DAP

2.2 MATERIALS

A. General:

1. All caulking and sealant materials, unless otherwise specifically approved by the Architect, shall be a single or double component, primerless, non-sagging type in neutral color or other color approved by the Architect where exposed to view, and shall be one of the following or an equal approval by the Architect.

B. Joint Compound Sealant: ELASTO-THANE 230

1. Composition: Polyurethane-based joint sealant.

2. Basic Uses: For sealing and caulking all joints that are subject to contraction and expansion. Bonds to concrete.

3. Limitations: Containers that have been opened must be used up within one or two days since it is a moisture-reactive material. It sets up when exposed to air. All surfaces must be completely free of foreign matter. (White color may discolor from exposure to U.V. and also from fluorescent light.)

4. Sizes: Available in 5-gallon pails, 10.5 oz. cartridges and 20.3 oz. sausages

5. Standards: Federal Specification TT-S-230c. Type II, Class A. ASTM C-920-87, Type S, Class 25, Use NT, M, and A.

C. DAP - SIDEWINDER ADVANCED SIDING & WINDOW SEALANT

1. Basic Uses: Sealant is designed to provide water and weather protection by airtight seal when used on interior and exterior surfaces. Sealant can be used for caulking window and door frames, vinyl, steel, aluminum, plywood siding, drywall, baseboards, bathroom and kitchen fixtures, primed fiber cement siding, and conventional stucco.

a. Sealant is useful as an acoustical sealant in construction of walls, windows, doors, ceilings, and floors to reduce sound transmission in wall partitions to maintain specified STC and OITC values.

b. DAP – Gutter & flashing advanced -VOC Compliant exterior sealant

i. Exterior flashing finish color : grey

2. Limitations:

a. Do not use for structural repairs.

b. Not recommended for below grade or water immersion applications.

c. Not to be used in applications where the surrounding materials will exceed sustained temperatures of 180 degrees F.

d. Do not expose to water or rain for at least 24 hours after application.

e. Application is recommended when temperature of air and surface is 50 degrees F or above for a 24 hour period.

f. Do not apply if relative humidity is above 90%.

g. Do not freeze.

3. Packaging & Sizes: Sealant is available in 10.1 fl. oz. plastic caulking cartridges and 5-gallon plastic pails.

4. Standards:

a. Meets or exceeds the requirements of ASTM C834, Type C (clear) and Type OP (opaque colors), Grade -18 degrees C.

b. Meets or exceeds the requirements of ASTM E90 and C919.

## 3.0 EXECUTION

### 3.1 CAULKING SCHEDULE

A. Carefully study the Drawings and furnish and install the proper caulking at each point where called for on the Drawings plus at all other points where caulking is required to maintain the continued integrity of the watertight barrier.

### 3.2 SURFACE CONDITIONS

A. Inspection:

1. Prior to all caulking, carefully inspect the surface to which caulking is to be applied and verify that they are clean, sound, and free from deleterious material which might adversely affect the bond.

2. Verify that caulking may be installed in accordance with the manufacturer's recommendations.

B. Corrections:

1. Clean all surfaces as necessary in accordance with manufacturer’s instructions.

2. In the event of discrepancy, immediately notify the Architect and do not proceed with installation of caulking in areas of discrepancy until all such discrepancies have been resolved.

    a. Non-structural shrinkage cracks larger than 1/16" and up to 1/4" must be treated and repaired accordingly prior to sealant application.

3. Use of a suitable latex or oil-based primer prior to application of sealant may be appropriate and shall be applied in accordance with manufacturer's instructions and per the Architect's approval.

## 3.3 INSTALLATION

A. Install caulking in strict accordance with the manufacturer's recommendations, taking care to produce beads of proper width and depth, to tool as recommenced by the manufacturer, and to immediately remove all surplus caulking.

B. Joint Design:

1. Suitable for all properly designed joints following accepted engineering practices.

2. Joint width must be a minimum of 4 times the anticipated movement.

C. Surface Preparation:

1. All joints must be absolutely clean and all curing compounds, old caulks, grease, waterproofing compounds, etc., must be removed.

2. For non-porous surfaces such as glass, metal, etc., cleaning with M.E.K. or Toluene is recommended.

3. Polyethylene rod or polyurethane foam is recommended as a joint-filler and back-up material. Fillers treated with bituminous products, grease or oil, should not be used. Where present, they must be removed or separated by vinyl tape or polyethylene film. Some surfaces may require the Elasto-Thane Primer.

    a. Backer rod must be installed when joint is larger than 3/8".

D. Application:

1. Apply by caulking gun, hand-pressure-type, or pour from container.

2. Bulk sealant can be applied by pumping equipment, trowel or putty knife.

3. Press firmly into joint to assure good contact to the sides of the joint.

## 3.4 CLEAN UP

A. Upon completion, remove all debris resulting from work of this Section.

3.5 WARRANTY

A. Product delivered shall be free of defects.

B. All products proven to be defective in manufacture will be replaced at no cost to the City. Since the use of these products is beyond our control we cannot assume any risk or liability for results obtained, nor can we accept damages in excess of the purchase price of these products.

**END OF SECTION**

# Division 8:
# Openings

# SECTION 081116 – ALUMINUM INTERIOR DOOR & FRAME SYSTEM

## 1.0 GENERAL

### 1.1 SUMMARY

A. This Section includes all labor, materials, equipment, operations, or methods listed, mentioned or scheduled on the plans and/or herein specified, including all incidentals necessary and required for completion of work under this Section.

B. Provide and install prefinished, prefabricated, extruded aluminum door frames, doors and glazing systems for interior use

### 1.2 RELATED SECTIONS

A. Documents affecting work of this Section include, but are not necessarily limited to, General Conditions, Special Conditions and Division 1 of these Contract Documents.

B. Section 087100 - Finish Hardware

C. Section 088100 – Glass and Glazing

D. Section 092900 - Gypsum Board

### 1.3 REFERENCES

A. Aluminum Association (AA):

1. DAF-45 Designation System for Aluminum Finishes

B. American Architectural Manufacturers Association (AAMA):

1. AAMA 2605 – Voluntary Specification, Performance Requirements and Test Procedures for Superior Performing Organic Coatings on Aluminum Extrusions and Panels.

2. AAMA 611 – Voluntary Specification for Anodized Architectural Aluminum.

3. AAMA 701 Voluntary Specifications for Pile Weather-stripping and Replaceable Fenestration Weatherseals.

4. AAMA 1503 Voluntary Test Method for Thermal Transmittance and Condensation Resistance of Windows, Doors, and Glazed Wall Sections.

5. AAMA 1801 Voluntary Specification for the Acoustical Rating of Windows, Doors, and Glazed Wall Sections.

6. AAMA CW-10 Care and Handling of Architectural Aluminum From Shop to Site.

7. AAMA SFM-1 Aluminum Storefront and Entrance Manual.

C. American Society for Testing and Materials (ASTM):

1. ASTM A36 Structural Steel.

2. ASTM A123 Zinc (Hot-Dip Galvanized) Coatings on Iron and Steel Products.

3. ASTM B209 Aluminum and Aluminum - Alloy Sheet and Plate.

4. ASTM B221 Aluminum-Alloy Extruded Bars, Rods, Wire, Shapes, and Tubes.

5. ASTM E2112 Standard Practice for Installation of Exterior Windows, Doors and Skylights.

6. ASTM E283 Test Method for Rate of Air Leakage Through Exterior Windows, Curtain Walls and Doors.

7. ASTM E330 Test Method for Structural Performance of Exterior Windows, Curtain Walls and Doors by Uniform Static Air Pressure Difference.

8. ASTM E331 Test Method for Water Penetration of Exterior Windows, Curtain Walls and Doors by Uniform Static Air Pressure Difference.

D. Federal Specifications (FS):

1. TT-P-641G(1) Primer Coating, Zinc Dust-Zinc Oxide (For Galvanized Surfaces).

2. TT-P-645A Primer, Paint, Zinc Chromate, Alkyd Type.

## 1.4 QUALITY ASSURANCE

A. All materials shall conform to the requirements of ANSI A250.8 - "SDI 100 Recommended Specifications for Standard Steel Doors and Frames.

B. Certification of Label Construction: For components exceeding Underwriters Laboratories, Inc. (UL), furnish inspection certificate stating that component construction conforms to UL rating requirements only if Architect is aware of such a limitation and has allowed the non-labeled unit.

C. Manufacturer shall be a company specializing in the manufacturing of door frame systems with a minimum of 10 continuous years of documented experience.

D. Installer shall be a company with a minimum of 5 years documented experience in the installation of interior aluminum door frames, approved by manufacturer.

1.5 SUBMITTALS

A. Comply with pertinent provisions of Section 013300, Submittal Procedures.

B. Submit Shop Drawings:

1. Indicate door and frame elevations and sections, materials, gauges, finishes, fabrication and erection details, and locations of finish hardware by dimension. Fabrication may not commence until all details are approved.

C. Submit manufacturer's installation instructions.

D. Submit Technical Data information relating to materials used on the project.

1.7 DELIVERY, STORAGE, AND HANDLING

A. Doors and frames shall be delivered cardboard-wrapped, crated, and palletized to provide protection while in transit and for the duration of site storage.

B. All materials shall be stored under cover in a dry, secure place, and shall be stored on a 4" elevation, such as wood blocking. The use of non-vented plastic or canvas shelters should be avoided to prevent forming of humidity chambers thus causing rust.

C. Provide 1/4" spaces between stacked doors to promote air circulation.

D. Should the cardboard wrapping on the doors/framing become wet, the cartons should be removed immediately. In the event this occurs, provide 1/4" spacing between doors to provide proper air circulation.

**2.0 PRODUCTS**

2.1 MANUFACTURER

A. Wilson Partitions, Snap-on square profile, 3225 E. Washington Blvd., Vernon, CA 90023, Ph: 1-800-997-7533, Fax: 1-323-261-9927, www.wilsonpart.com, or approved equal.

2.2 MATERIALS – GENERAL

A. All component shapes shall be extruded from controlled alloy billets of 6063-T5 or 6463-T5, complying with ASTM B221:

B. Provide fasteners of aluminum, stainless steel or other non-corrosive materials which are compatible with aluminum components, complying with ASTM A164.

C. Glazing Gaskets shall be black or gray rol-in vinyl type.

D. Door silencers:

1. Non-rated frames: black or gray pull in mohair type

2. Fire-rated frames: pull-in vinyl.

2.3 CONSTRUCTION REQUIREMENTS

A. Frames shall be formed from AT LEAST 0.062” thick aluminum.

B. Frames shall have 2" face jambs and heads unless noted otherwise.

C. Frames shall have mitered corners and shall be of knockdown construction.

D. Frames shall have 9 gauge steel universal hinge tap plate protection welded with provisions for 4 1/2" x 4 1/2" template type hinges and 14 gauge steel strike reinforcement plate, extruded and formed to the equivalent of 10 gauge, protection welded with provision for Universal ANSI A115.1 or ANSI 115.2 strike.

E. Frames shall be provided with 9/32" silencer preparation for field application after finish painting:

1. (3) per strike jamb

2. (2) per head for double openings

F. Glazed frames shall have profile to match door frames, providing a center glazed appearance with no projecting stops.

2.5 FINISH

A. Exposed surfaces of frames shall be factory finished.

1. Baked enamel to match existing doors and frames.

**3.0 EXECUTION**

3.1 INSTALLATION – GENERAL

A. Follow manufacturer’s instructions for complete installation.

B. Verify condition of openings for compliance with plans and shop drawings.

C. Correct any installation deficiencies as directed by the Architect or Owner's Representative.

D. All clearances shall be, unless otherwise specified, subject to a tolerance of +/- 1/32".

3.2 INSTALLATION – DOORS

A. Doors shall be installed and fastened to maintain alignment with frames to achieve maximum operational effectiveness and appearance.

B. Doors shall be adjusted to maintain perimeter clearances as specified herein.

C. Shimming shall be performed by the installer as needed to assure the proper clearances are achieved.

D. Installation of hardware items shall be in accordance with the hardware manufacturer's recommendations and templates. ANSI A115.IG shall be used as a reference for other pertinent information.

E. The clearance between the meeting edges of pairs of doors shall be 1/8" +/- 1/16".

1. The clearance at the bottom shall be 3/4".

2. The clearance between the face of the door and door stop shall be 1/16" to 1/8".

3.3 INSTALLATION – FRAMES

A. Set all frames in accordance with SDI 105-92.

B. Install frames using the door as template to assure perfect alignment of the door and frame. Provide a fastener at each clip.

C. All frames shall be installed plumb, level, rigid and in true alignment as recommended in ANSI A250.11 and ANSI A115.IG.

D. All frames shall be fastened to the adjacent structure so as to retain their position and stability.

F. The clearance between the door and frame head and jambs shall be 1/8" for both types of frames specified herein.

3.4 ADJUSTMENT AND CLEAN UP

A. Remove all debris from opening and wipe frames to clean any dust or other foreign material from the frames.

B. Upon completion, remove all debris resulting from work of this Section.

C. Adjust moving parts to ensure a smooth operation. Use shims if necessary to allow for proper closing.

3.5 WARRANTY

A. Product delivered shall be free of defects.

B. Repair or replace any doors and frames shown to be defective or damaged prior to project close-out as stated in standard warranty.

**END OF SECTION**

# SECTION 081400 - WOOD DOORS

## 1.0 GENERAL

### 1.1 SUMMARY

A. This Section includes all labor, materials, equipment, operations, or methods listed, mentioned or scheduled on the plans and/or herein specified, including all incidentals necessary and required for completion of work under this Section.

B. Provide and install interior wood doors as specified herein and as shown and scheduled on project Drawings.

### 1.2 RELATED SECTIONS

A. Documents affecting work of this Section include, but are not necessarily limited to, General Conditions, Special Conditions and Division 1 of these Contract Documents.

B. Section 081116 – Aluminum Interior Door & Frame System

C. Section 087100 - Door Hardware

### 1.3 REFERENCES

A. ASTM E152 - Methods of Fire Tests and Door Assemblies.

B. NFPA 252 - Standard Methods for Fire Assemblies.

C. Warnock-Hersey.

D. Underwriters Laboratories, Inc.

E. FSC – Forest Stewardship Council

### 1.4 QUALITY ASSURANCE

A. Qualifications of Fabrications and Installers:

1. For actual fabrication and installation of wood doors, use only workmen who are thoroughly trained and experienced in the products and the recommended methods for their fabrication and installation.

2. In the acceptance or rejection of wood doors, no allowance will be made for lack of skill on the part of workmen.

B. Codes and Standards:

1. In addition to complying with all pertinent codes and regulations, comply with *Manual of Millwork* of the Woodwork Institute of California for the grades specified, except that certification will not be required.

C. Verification of Compliance:

1. The Owner reserves the right to request and pay for an inspection by a representative of the Woodwork Institute of California to determine that all work of this Section has been performed in accordance with the referenced standards.

2. In the event such inspection determines that wood doors do not comply with the referenced standards, the Contractor shall pay the costs of the inspection and shall immediately remove the non-complying items and immediately replace them with items complying with the referenced standards and these Specifications, all at no additional cost to the Owner.

1.5 ENVIRONMENTAL REQUIREMENTS

A. Provide wood-based materials and products (including composite wood) that have been certified in accordance with the Forest Stewardship Council's Principles and Criteria, including but not limited to, structural framing and general dimensional framing, flooring, finishes, furnishings, and non-rented temporary construction applications such as bracing, concrete formwork and pedestrian barriers.

1. The following programs are accredited by the Forest Stewardship Council (FSC):

a. Green Cross Certification Program, administered by Scientific Certification Systems (SCS).

b. Smart Wood Certification Program, administered by Rainforest Alliance.

c. Societe Generale de Surveillance (SGS) Forestry Qualifor Programme, administered by Oxford Centre for Innovation.

d. The Responsible Forestry Program, administered under Soil Association's Woodmark Scheme.

e. SKAL Forestry Certification Program, administered by SKAL.

B. Provide local source materials (within 500 miles).

1. Submit documentation on Local/Regional Materials; each submittal shall include the following:

a. Cost of materials (exclude labor and transportation).

b. Air miles from manufacturing point to job site.

C. Provide product with highest possible recycled content.

1. Each submittal shall include the following:

a. Cost of materials (exclude labor and transportation).

b. Air miles from manufacturing point to job site.

c. Recycled content (% post-consumer, % post-industrial, and total)

1.6 SUBMITTALS

A. Comply with pertinent provisions of Section 013300, Submittal Procedures.

B. Submit manufacturer's product data and full lifetime warranty information.

C. Shop Drawings for door openings, elevations, sizes, types, swings, undercuts, etc.

D. Certified Lumber:

1. For each material/product used, provide vendor's or manufacturer's Forest Stewardship Council chain-of-custody certificate number.

E. Submit two samples of door veneer, 8 x 10 inch in size illustrating wood grain, finish and sheen.

1.7 DELIVERY, STORAGE, AND PRODUCT HANDLING

A. Deliver materials to project site in manufacturer's protective packaging. Store in a dry area and ensure materials will not come into contact with any form of moisture.

B. Protection:

1. Use all means necessary to protect wood doors before, during and after installation and to protect the installed work and materials of all other trades.

C. Replacements:

1. In the event of damage, immediately make all repairs and replacements necessary to the approval of the Architect and at no additional cost to the Owner.

1.8 WARRANTY

A. Manufacturer's standard warranty - "Full Life of Original Installation," which includes hanging and finishing. Warranty shall cover delamination, warping, bow, cup, and telegraphing of core construction beyond warranty tolerances.

B. The product delivered shall be free from defects.

## 2.0 PRODUCTS

### 2.1 MANUFACTURER

A. Eggers Industries, www.eggersindustries.com, or approved equal.

### 2.2 WOOD DOORS

A. Interior Veneer Facing: WDMA Premium AA grade, standard thickness, kiln dried and smoothly sanded.

1. Wood: White maple, quarter awn, book matched

2. Finish: Transparent – factory prefinished

B. Cross banding behind veneer finish: 2 ply; manufacturer's standard construction.

C. Edge Banding: Hardwood solid stock, veneer banded, same species as face of doors.

D. Facing Adhesive: minimum Type II – water resistant.

### 2.3 FRAMES

A. Refer to Section 084113, Aluminum-Framed Entrances and Storefronts as well as project Drawings for frame detail.

### 2.4 FABRICATION

A. Fabricate fire rated doors in accordance with WDMA requirements and to UL or ITS label requirements. Attach fire rating label to door.

1. For neutral pressure doors, fabricate to UL 10B requirements.

2. For smoke and draft assemblies (positive pressure), fabricate to UL 10C requirements, Category B.

B. Furnish lock blocks at lock edge and top of door for closer for hardware reinforcement.

C. Vertical Exposed Edge of Stiles: of same species as veneer facing.

D. Fit door edge trim to edge of stiles after applying veneer facing.

E. Bond edge banding to cores.

F. Factory machine doors for finish hardware in accordance with hardware requirements and dimensions. Do not machine for surface hardware. Furnish solid blocking for through bolted hardware.

G. Factory fit doors for frame opening dimensions identified on shop drawings.

H. Provide edge clearances in accordance with WDMA requirements.

2.5 SHOP FINISHING

A. Factory finish doors in accordance with AWI Quality Standard Section 1500 to the following finish designations; color as selected:

1. Transparent Finish TR-6: Catalyzed polyurethane, Custom quality, satin sheen.

B. Factory finish doors in accordance with approved sample.

**3.0 EXECUTION**

3.1 EXAMINATION

A. Surface Conditions:

1. Prior to installation of the work of this Section, carefully inspect the installed work of all other trades and verify that all such work is complete to point where this installation may properly commence.

   a. Verify that substrate opening conditions and opening sizes and tolerances are acceptable and ready to receive work of this Section.

2. Do not install doors in frame openings that are not plumb or are out of tolerance for size or alignment.

3.2 INSTALLATION

A. Install doors in accordance with manufacturer's recommended methods of installation.

B. Doors shall be installed plumb and true. Frames shall be rigid and securely anchored in place.

C. DO NOT TRIM POSITIVE PRESSURE RATED DOORS FOR WIDTH.

D. EXCERCISE CAUTION WHEN DRILLING PILOT HOLES AND INSTALLING HINGES SO THAT PILOT HOLES ARE NOT OVER-DRILLED AND SCREWS ARE NOT OVER-TORQUED.

3.4 ADJUSTING AND CLEAN UP

A. Adjust doors for smooth and balanced door movement.

B. Upon completion, clean the work of this Section in accordance with recommendations of the manufacturers of the materials used.

C. Provide required protection of product to prevent damage and wear prior to acceptance of the work by the Owner.

**END OF SECTION**

# SECTION 084113 – ALUMINUM-FRAMED ENTRANCES AND STOREFRONTS

## 1.0 GENERAL

### 1.1 SUMMARY

A. This Section includes all labor, materials, equipment, operations, or methods listed, mentioned or scheduled on the plans and/or herein specified, including all incidentals necessary and required for completion of work under this Section.

B. Provide and install a storefront system complete with reinforcing, fasteners, anchors, and attachment devices, including all related accessories necessary to complete work.

### 1.2 RELATED SECTIONS

A. Documents affecting work of this Section include, but are not necessarily limited to, General Conditions, Special Conditions and Division 1 of these Contract Documents.

B. Section 079000, Sealants and Caulking

C. Section 087100, Door Hardware

D. Section 088000, Glass and Glazing

E. Section 099100, Painting

### 1.3 REFERENCES

A. Aluminum Association (AA):

1. DAF-45 Designation System for Aluminum Finishes

B. American Architectural Manufacturers Association (AAMA):

1. AAMA 501 Methods of Test for Exterior Walls

2. AAMA 2605 Voluntary Specification, Performance Requirements and Test Procedures for Superior Performing Organic Coatings on Aluminum Extrusions and Panels.

3. AAMA 611 Voluntary Specification for Anodized Architectural Aluminum.

4. AAMA 701 Voluntary Specifications for Pile Weather-stripping and Replaceable Fenestration Weatherseals.

5. AAMA 1503 Voluntary Test Method for Thermal Transmittance and Condensation Resistance of Windows, Doors, and Glazed Wall Sections.

6. AAMA 1801 Voluntary Specification for the Acoustical Rating of Windows, Doors, and Glazed Wall Sections.

7. AAMA CW-10 Care and Handling of Architectural Aluminum From Shop to Site.

8. AAMA SFM-1 Aluminum Storefront and Entrance Manual.

C. American Society for Testing and Materials (ASTM):

1. ASTM A36 Structural Steel.

2. ASTM A123 Zinc (Hot-Dip Galvanized) Coatings on Iron and Steel Products.

3. ASTM B209 Aluminum and Aluminum - Alloy Sheet and Plate.

4. ASTM B221 Aluminum-Alloy Extruded Bars, Rods, Wire, Shapes, and Tubes.

5. ASTM E2112 Standard Practice for Installation of Exterior Windows, Doors and Skylights.

6. ASTM E283 Test Method for Rate of Air Leakage Through Exterior Windows, Curtain Walls and Doors.

7. ASTM E330 Test Method for Structural Performance of Exterior Windows, Curtain Walls and Doors by Uniform Static Air Pressure Difference.

8. ASTM E331 Test Method for Water Penetration of Exterior Windows, Curtain Walls and Doors by Uniform Static Air Pressure Difference.

D. Federal Specifications (FS):

1. TT-P-641G(1) Primer Coating, Zinc Dust-Zinc Oxide (For Galvanized Surfaces).

2. TT-P-645A Primer, Paint, Zinc Chromate, Alkyd Type.

E. Steel Structures Painting Council (SSPC):

1. Cold-Applied Asphalt Mastic (Extra Thick Film).

## 1.4 SYSTEM REQUIREMENTS

A. Design Requirements:

1. Drawings are diagrammatic and do not purport to identify nor solve problems of thermal or structural movement, glazing, anchorage, or moisture disposal.

2. Requirements shown by details are intended to establish basic dimension of units, sight lines and profiles of members.

3. Provide concealed fastening.

4. Provide entrance and storefront systems, including necessary modifications, to meet specified requirements and maintaining visual design concepts.

5. Attachment considerations are to take into account site peculiarities and expansion and contraction movements so there is no possibility of loosening, weakening or fracturing connection between units and building structure or between units themselves.

6. Anchors, fasteners and braces shall be structurally stressed not more than 50% of allowable stress when maximum loads are applied.

7. Provide for expansion and contraction due to structural movement without detriment to appearance or performance.

8. Framing systems shall accommodate expansion and contraction movement due to surface temperature differentials of 180 degrees F without causing buckling, stress on glass, failure of joint seals, excessive stress on structural elements, reduction of performance, or other detrimental effects.

9. Stresses placed on structural silicone sealants shall be kept within sealant manufacturer's recommended maximum.

B. Performance Requirements:

1. Wind loads: Provide framing system capable of withstanding wind load design pressures of 18.5 psf acting inward and 18.5 psf acting outward. The design pressures are based on the California Building Code, 2001 Edition.

2. Air infiltration: Air leakage through fixed light areas of storefront shall not exceed 0.06 cfm per square foot of surface area when tested in accordance with ASTM E283 at differential static pressure of 6.24 psf.

   a. Swing Entrances: With doors in closed and locked position, a single 3 x 7 door and frame shall not exceed 0.50 cfm/lin.ft. test at pressure differential of 6.24 psf. A pair of doors shall not exceed 1.0 cfm per linear foot of perimeter crack at pressure differential of 1.57 psf. (ASTM E283).

3. Water infiltration: No uncontrolled leakage when tested in accordance with ASTM E331 at test pressure of 10 psf as defined in AAMA 501.

4. Deflection: Maximum calculated deflection of any framing member in direction normal to plane of wall when subjected to specified design pressures for spans up to and including 13'-6" shall be limited to 1/175 of its clear span and for spans

greater than 13'-6" deflection shall be limited to 1/240 of its clear span + 1/4", except that maximum deflection of members supporting plaster surfaces shall not exceed 1/360 of its span.

5. Thermal Transmittance (U-factor): When tested to AAMA Specification 1503, the thermal transmittance (U-factor) shall not be more than:

   a. 0.47 Btu/sq ft per hour per °F

6. Condensation Resistance (CRF): When tested to AAMA Specification 1503, the condensation resistance factor shall not be less than 63.

C. Testing Requirements: Provide components that have been previously tested by an independent testing laboratory.

1.5 SUBMITTALS

A. Comply with provisions of Section 013300, Submittal Procedures.

B. Product Data:

1. Submit manufacturer's descriptive literature and product specifications.

2. Include information for factory finishes, hardware, accessories, and other required components.

C. Shop Drawings:

1. Submit shop drawings covering fabrication, installation and finish of specified systems.

2. Include following:

   a. Fully dimensioned plans and elevations with detail coordination keys.

   b. Locations of exposed fasteners and joints.

3. Provide detailed drawings of:

   a. Composite members.

   b. Joint connections for framing systems and for entrance doors.

   c. Anchorage.

   d. System reinforcements.

   e. System expansion and contraction provisions.

f. Glazing methods and accessories.

g. Internal sealant requirements.

h. Thermal improvements.

4. Schedule of finishes.

D. Samples:

1. Submit Manufacturer's standard samples indicating quality of finish.

2. Where normal texture or color variations are expected, include additional samples illustrating range of variation.

3. Submit samples for each type of glass, 12 x 12 inch size.

E. Test Reports:

1. Standard Systems: Submit certified copies of previous test reports substantiating performance of system in lieu of retesting. Include other supportive data as necessary.

F. Qualification Data:

1. Submit installer qualifications verifying years of experience.

G. Manufacturer's Instructions: Submit manufacturer's printed installation instructions.

1.6 DELIVERY, STORAGE AND HANDLING

A. Protect finished surfaces as necessary to prevent damage.

B. Do not use adhesive papers or sprayed coatings that become firmly bonded when exposed to sun.

C. Do not leave coating residue on any surfaces.

D. Replace damaged units.

1.7 QUALITY ASSURANCE

A. Single Source Responsibility:

1. To ensure quality of appearance and performance, obtain materials for systems from either a single manufacturer or from manufacturer approved by systems manufacturer.

B. Installer Qualifications: Certified in writing by system manufacturer as qualified for installation of specified systems.

C. Perform Work in accordance with AAMA SFM-1 and manufacturer's written instructions.

1.8 WARRANTY

A. Provide written warranty in form acceptable to City jointly signed by manufacturer, installer and Contractor warranting work to be watertight, free from deflective materials, defective workmanship, glass breakage due to defective design, and agreeing to replace components which fail within 1 year from date of Substantial Completion.

B. Warranty shall cover following:

1. Complete watertight and airtight system installation within specified tolerances.

2. System is structurally sound and free from distortion.

3. Glazed units

**2.0 PRODUCTS**

2.1 MANUFACTURER

A. Kawneer Co., Inc., 555 Guthridge Court, Norcross, CA 30092, 1-770-449-5555, www.kawneer.com, or approved equal.

2.2 MATERIALS

A. Entrance and Storefront System: Model Trifab VG 451T front glazed framing system, 350 Heavy Wall Entrance

1. Frame: Thermally broken, 2” x 4-1/2” deep, unless otherwise noted on drawings; flush glazing stops, drainage holes, internal weep drainage system.

2. Mullions: Profile of extruded aluminum with internal reinforcement of aluminum

3. Doors: Aluminum framed medium stile glass doors, 2” thick, nominal 3-1/2” wide top rail, 3-1/2” vertical stiles, 10” wide bottom rail, beveled glazing stops, welded corners.

B. Framing Materials and Accessories:

1. Aluminum:

a. ASTM B221, alloy 6063-T5 for extrusions; ASTM B209, alloy 5005-H16 for sheets; or other alloys and temper recommended by manufacturer appropriate for specified finish.

2. Internal Reinforcing:

a. ASTM A36 for carbon steel.

b. Shapes and sizes to suit installation.

3. Anchorage Devices:

a. Manufacturer's standard formed or fabricated steel or aluminum assemblies of shapes, plates, bars or tubes.

b. Hot-dip galvanize steel assemblies after fabrication; comply with ASTM A123, 2.0 ounce minimum coating.

4. Fasteners:

a. Aluminum, non-magnetic stainless steel or other non-corrosive materials compatible with items being fastened.

b. Provide concealed fasteners wherever possible.

c. For exposed locations, provide Phillips flathead screws with finish matching item fastened.

d. For concealed locations, provide manufacturer's standard fasteners.

5. Expansion Anchor Devices: Lead-shield or toothed-steel, drilled-in, expansion bolt anchors.

6. Protective Coatings: Cold-applied asphalt mastic complying with SSPC, compounded for 30 mil thickness for each coat; or alkyd type zinc chromate primer complying with FS TT-P-645.

7. Touch-Up Primer for Galvanized Components: Zinc oxide conforming with FS TT-P-641.

8. Glazing Gaskets:

a. Compression type design, replaceable, molded or extruded, of neoprene, polyvinyl chloride (PVC), or ethylene propylene diene monomer (EPDM).

1) EPDM gasket materials shall be recyclable.

b. Profile and hardness as required to maintain uniform pressure for watertight seal.

9. Weather-stripping:

a. Wool pile conforming to AAMA 701.2.

b. Provide EPDM or vinyl-blade gasket weather-stripping in bottom door rail, adjustable for contact with threshold.

10. Internal Sealants and Baffles.

C. Glass and Glazing Accessories: Refer to Section 088000, Glass and Glazing.

2.3 FABRICATION

A. Coordination of Fabrication:

1. Check actual frame or door openings required in construction work by accurate field measurements before fabrication.

2. Fabricate units to withstand loads that will be applied when system is in place.

B. General

1. Conceal fasteners wherever possible.

2. Reinforce work as necessary for performance requirements, and for support to structure.

3. Separate dissimilar metals and aluminum in contact with concrete utilizing protective coating or preformed separators, which will prevent contact and corrosion.

4. Comply with Section 088000, Glass and Glazing for glazing requirements.

C. Aluminum Framing:

1. Provide members of size, shape and profile indicated, designed to provide for glazing from exterior.

2. Provide manufacturer's standard thermal break between exterior and interior aluminum surfaces.

3. Fabricate frame assemblies with joints straight and tight fitting.

4. Reinforce internally with structural members as necessary to support design loads.

5. Maintain accurate relation of planes and angles, with hairline fit of contacting members.

6. Seal horizontals and direct moisture accumulation to exterior.

7. Provide flashings and other materials used internally or externally that are corrosive resistant, non-staining, non-bleeding and compatible with adjoining materials.

8. Provide manufacturer's extrusions and accessories to accommodate expansion and contraction due to temperature changes without detrimental to appearance or performance.

D. Welding:

1. Comply with recommendations of the American Welding Society.

2. Use recommended electrodes and methods to avoid distortion and discoloration.

3. Grind exposed welds smooth and flush with adjacent surfaces; restore mechanical finish.

E. Flashings: Form from sheet aluminum with same finish as extruded sections. Apply finish after fabrication. Material thickness as required to suit condition without deflection or "oil-canning".

2.4 FINISHES

A. Painted Aluminum surfaces: AA-M12C12R1x non specular as fabricated mechanical finish, chemically cleaned, and prepared for applied, organic coating.

1. High performance organic coating: Fluoropolymer coating system complying with AAMA 2604 minimum three coat, with minimum 70% polyvinylidene fluoride resin.

2. Color: match RAL 7015 (existing color)

3. Apply factory coating to surfaces exposed at completed assemblies.

4. Apply finish to surfaces cut during fabrication to that no natural aluminum is visible in completed assemblies, including joint edges.

5. Apply touch-up materials recommended by coating manufacturer for field application to cut ends and minor damage that may occur to factory applied finish.

**3.0 EXECUTION**

3.1 INSTALLATION

A. Erection Tolerances:

1. Maximum variation from plumb: 0.06” every 3’ non-cumulative or 1/16” per 10’, whichever is less.

2. Limit offsets in theoretical end-to-end and edge-to-edge alignment: 1/16 inch from flush surfaces not more than 2 inches apart or out-of-flush by more than 1/4 inch.

B. Install doors and hardware in accordance with manufacturer's printed instructions.

C. Set units plumb, level and true to line, without warp or rack of frame.

D. Anchor securely in place, allowing for required movement, including expansion and contraction.

E. Separate dissimilar materials at contact points, including metal in contact with masonry or concrete surfaces, with bituminous paint or preformed separators to prevent contact and corrosion.

F. Set sill members in bed of sealant. Set other members with internal sealants and baffles to provide weather-tight construction.

G. Coordinate installation of perimeter sealant and backing materials between assemblies and adjacent construction in accordance with requirements of Section 079000, Sealants and Caulking.

H. Glazing: Refer to requirements of Section 088000, Glass and Glazing.

3.2 ADJUSTING

A. Test door operating functions. Adjust closing and latching speeds and other hardware in accordance with manufacturer's instructions to ensure smooth operation.

3.3 CLEANING

A. Clean surfaces in compliance with manufacturer's recommendations; remove excess mastic, mastic smears, foreign materials and other unsightly marks.

B. Clean metal surfaces exercising care to avoid damage.

**END OF SECTION**

# SECTION 085169 – GATE HARDWARE

## 1.0 GENERAL

### 1.1 SUMMARY

A. This Section includes all labor, materials, equipment, operations, or methods listed, mentioned or scheduled on the plans and/or herein specified, including all incidentals necessary and required for completion of work under this Section.

1. "Hardware groups" have been assigned to the various doors required for this work, as indicated in the Door Schedule on the Drawings. The hardware groups are described in detail in the "Hardware Schedule," Section 3.2 A and B of this Section.

2. Unless otherwise approved by the Architect, furnish all finish hardware described in the Hardware schedule and all other finish hardware not described but required for a complete and operable facility.

### 1.2 RELATED SECTIONS

A. Documents affecting work of this Section include, but are not necessarily limited to the drawings and project manual.

B. Section 051200 – Ornamental Fences and Gates

### 1.3 QUALITY ASSURANCE

A. Qualifications of Supplier:

1. The finish hardware supplier shall have an AHC member of the American Society of Hardware Consultants who shall be made available for consultation at no additional cost to the District during construction.

2. The AHC shall be present at completion of the work and shall check the installation of finish hardware and shall report to the Architect all obvious misapplication of finish hardware.

### 1.4 SUBMITTALS

A. Comply with pertinent provisions of these Contract Documents.

B. Materials List:

1. Within 15 days after award of Contract, and before any finish hardware is ordered or purchased for this work, submit to the Architect for his approval a complete

list of all finish hardware proposed to be furnished for this work, giving manufacturer's name and catalog number for each item.

2. This shall in no way be construed as permitting substitution of items for the items specified.

1.5 DELIVERY, STORAGE AND PRODUCT HANDLING

A. Delivery:

1. Deliver all finish hardware to the job site with all labels intact and legible.

B. Packaging:

1. Furnish all finish hardware with each unit marked or numbered in accordance with the Hardware schedule.

2. Pack each item complete with all necessary pieces and fasteners.

3. Properly wrap and cushion each item to prevent scratches during delivery and storage.

C. Protection:

1. Use all means necessary to protect materials before, during and after installation and to protect the installed work and materials of other trades.

D. Replacement:

1. In the event of damage, immediately make all repairs and replacements necessary for the approval of the Architect and at no additional cost to the District.

**2.0 PRODUCTS**

2.1 FASTENINGS

A. Furnish all finish hardware with all necessary screws, bolts, and other fasteners of suitable size and type to anchor the hardware in position for long life under hard use.

B. Furnish fastenings where necessary with expansion shields, toggle bolts, hex bolts, and other anchors approved by the Architect, according to the material to which the hardware is to be applied and the recommendation of the hardware manufacturer.

C. When flush bolts occur in path of travel, provide accessible flush bolt (automatic).

D. Door closer shall comply with 11B-404.2.8.1, door closer delay time. Minimum Delay Time: 5 seconds to move from 90° to 12° from latch. Maximum closer-effort: 5 pounds exterior doors, 5 pounds interior doors and minimum effort to latch door.

E. The Authority having Jurisdiction, may increase the maximum effort to operate fire doors to achieve positive latching, but not to exceed 15 lbs max.

F. All fastenings shall harmonize with the hardware as to material and finish.

2.2 FINISH HARDWARE REQUIREMENTS

A. Refer to 3.2 A & B of this Section for Schedule.

B. Thresholds in the path of travel shall conform with 11B-404.2.5.

C. Hand-activated hardware, including lever-type hardware, panic bars, push-pull activating, shall be between 34" to 44" AFF.

D. Lever handles for thumb turn dead bolt per 11B-309.4.

E. Maximum effort to unlatch panic hardware must be 15 lb. in direction of travel.

2.3 KEYING

A. Construction Keying:

1. Construction key all locks; provide six construction keys and one extractor key.

B. Final Keying System:

1. All locks keyed per District's instructions.

C. Deliver all keys to the District.

D. Contractor shall provide a method independent of the final keying system for securing the building during construction and shall provide the SUHSD Facilities and Operations Department with construction keys and IC control keys.

E. Primus cylinders should be 0 bitted. When contractor is ready for installing the cylinders, the SUHSD Facilities and Operation Department will pin them according to their keying schedule. Contractor will then install the pinned cylinders.

F. Keying System:

1. Provide keyed cylinders to provide master and grand master keying system. Based on the Districts direction.

**3.0 EXECUTION**

3.1 INSTALLATION

A. Install the work of this Section in strict accordance with the manufacturer's recommendations as approved by the Architect, anchoring all components firmly into position for long life under hard use.

B. Doorstops must be mounted within 4-inches of wall in path of travel.

3.2 HARDWARE SCHEDULE

A. MANUFACTURER'S SYMBOLS

| | | |
|---|---|---|
| SCH | SCHLAGE | LOCKSETS, STRIKE, CYLINDERS |
| PE | PEMKO | THRESHOLD, GASKETING, WEATHER-STRIPPING |
| HAG | HAGER | BUTTS, HINGES |
| IVE | IVES | KICK PLATES, DOOR STOP, HINGES |
| VON | VON DUPRIN | EXIT DEVICE |
| NOR | NORTON | CLOSERS |

B. FINISH HARDWARE

1. General:

a. Finish throughout to be Dull Chromium

b. Hinges shall be non-removable pin (NRP) type.

c. Holder to be thru-bolted to doors.

d. Kick-down door holders not allowed.

2. Hardware Groups

a. Gate with Panic Hardware

| | |
|---|---|
| Closer | (NOR 7500 x PR) |
| Door Stop | (HAG FS41) |
| Door Bottom | (PEM) |
| Panic Device | (VON 99L-2 x VR 900 Series Trim) |
| Rim Cylinder | (SCH Primus PL) |
| Gasket | (PEM S88D) |
| Hinge | (HAG BB1199NRP) |
| Kick Plates | (IVE 8400 x 10” 2” LDW B4E) |
| Threshold | (IVE per detail) |

3.3 CLEANING

A. Upon completion, clean the work of this Section in accordance with recommendations of the manufacturers of the materials used.

B. Provide required protection of products to prevent damage and wear prior to acceptance of the work by the City.

3.4 WARRANTY

A. The products delivered shall be free from defects.

B. Manufacturer's standard performance warranty, as available for specified installation and environmental conditions.

**END OF SECTION**

# SECTION 087100 - DOOR HARDWARE

## PART 1 - GENERAL

### 1.1 RELATED DOCUMENTS

A. Drawings and general provisions of the Contract, including General and Supplementary Conditions and Division 1 Specification Sections, apply to this Section.

### 1.2 SUMMARY

A. This Section includes commercial door hardware for the following:

1. Swinging doors.
2. Other doors to the extent indicated.

B. Door hardware includes, but is not necessarily limited to, the following:

1. Mechanical door hardware.
2. Electromechanical door hardware.

C. Related Sections:

1. Division 08 all sections

D. Codes and References: Comply with the version year adopted by the Authority Having Jurisdiction.

1. ANSI A117.1 - Accessible and Usable Buildings and Facilities.
2. ICC/IBC - International Building Code.
3. NFPA 70 - National Electrical Code.
4. NFPA 80 - Fire Doors and Windows.
5. NFPA 101 - Life Safety Code.
6. NFPA 105 - Installation of Smoke Door Assemblies.
7. State Building Codes, Local Amendments.

E. Standards: All hardware specified herein shall comply with the following industry standards:

1. ANSI/BHMA Certified Product Standards - A156 Series
2. UL10C – Positive Pressure Fire Tests of Door Assemblies

1.3 SUBMITTALS

A. Product Data: Manufacturer's product data sheets including installation details, material descriptions, dimensions of individual components and profiles, operational descriptions and finishes.

B. Door Hardware Schedule: Prepared by or under the supervision of supplier, detailing fabrication and assembly of door hardware, as well as procedures and diagrams. Coordinate the final Door Hardware Schedule with doors, frames, and related work to ensure proper size, thickness, hand, function, and finish of door hardware.

1. Format: Comply with scheduling sequence and vertical format in DHI's "Sequence and Format for the Hardware Schedule."

2. Organization: Organize the Door Hardware Schedule into door hardware sets indicating complete designations of every item required for each door or opening. Organize door hardware sets in same order as in the Door Hardware Sets at the end of Part 3. Submittals that do not follow the same format and order as the Door Hardware Sets will be rejected and subject to resubmission.

3. Content: Include the following information:

a. Type, style, function, size, label, hand, and finish of each door hardware item.
b. Manufacturer of each item.
c. Fastenings and other pertinent information.
d. Location of door hardware set, cross-referenced to Drawings, both on floor plans and in door and frame schedule.
e. Explanation of abbreviations, symbols, and codes contained in schedule.
f. Mounting locations for door hardware.
g. Door and frame sizes and materials.
h. Warranty information for each product.

4. Submittal Sequence: Submit the final Door Hardware Schedule at earliest possible date, particularly where approval of the Door Hardware Schedule must precede fabrication of other work that is critical in the Project construction schedule. Include Product Data, Samples, Shop Drawings of other work affected by door hardware, and other information essential to the coordinated review of the Door Hardware Schedule.

C. Shop Drawings: Details of electrified access control hardware indicating the following:

1. Wiring Diagrams: Upon receipt of approved schedules, submit detailed system wiring diagrams for power, signaling, monitoring, communication, and control of the access control system electrified hardware. Differentiate between manufacturer-installed and field-installed wiring. Include the following:

a. Elevation diagram of each unique access controlled opening showing location and interconnection of major system components with respect to their placement in the respective door openings.

b. Complete (risers, point-to-point) access control system block wiring diagrams.
c. Wiring instructions for each electronic component scheduled herein.

2. Electrical Coordination: Coordinate with related sections the voltages and wiring details required at electrically controlled and operated hardware openings.

D. Keying Schedule: After a keying meeting with the owner has taken place prepare a separate keying schedule detailing final instructions. Submit the keying schedule in electronic format. Include keying system explanation, door numbers, key set symbols, hardware set numbers and special instructions. Owner must approve submitted keying schedule prior to the ordering of permanent cylinders/cores.

E. Informational Submittals:

1. Product Test Reports: Indicating compliance with cycle testing requirements, based on evaluation of comprehensive tests performed by manufacturer and witnessed by a qualified independent testing agency.

F. Operating and Maintenance Manuals: Provide manufacturers operating and maintenance manuals for each item comprising the complete door hardware installation in quantity as required in Division 01, Closeout Submittals.

## 1.4 QUALITY ASSURANCE

A. Manufacturers Qualifications: Engage qualified manufacturers with a minimum 5 years of documented experience in producing hardware and equipment similar to that indicated for this Project and that have a proven record of successful in-service performance.

B. Installer Qualifications: A minimum 3 years documented experience installing both standard and electrified door hardware similar in material, design, and extent to that indicated for this Project and whose work has resulted in construction with a record of successful in-service performance.

C. Door Hardware Supplier Qualifications: Experienced commercial door hardware distributors with a minimum 5 years documented experience supplying both mechanical and electromechanical hardware installations comparable in material, design, and extent to that indicated for this Project. Supplier recognized as a factory direct distributor by the manufacturers of the primary materials with a warehousing facility in Project's vicinity. Supplier to have on staff a certified Architectural Hardware Consultant (AHC) available during the course of the Work to consult with Contractor, Architect, and Owner concerning both standard and electromechanical door hardware and keying.

D. Source Limitations: Obtain each type and variety of door hardware specified in this section from a single source unless otherwise indicated.

1. Electrified modifications or enhancements made to a source manufacturer's product line by a secondary or third party source will not be accepted.

2. Provide electromechanical door hardware from the same manufacturer as mechanical door hardware, unless otherwise indicated.

E. Each unit to bear third party permanent label demonstrating compliance with the referenced standards.

F. Keying Conference: Conduct conference to comply with requirements in Division 01 Section "Project Meetings." Keying conference to incorporate the following criteria into the final keying schedule document:

1. Function of building, purpose of each area and degree of security required.
2. Plans for existing and future key system expansion.
3. Requirements for key control storage and software.
4. Installation of permanent keys, cylinder cores and software.
5. Address and requirements for delivery of keys.

G. Pre-Submittal Conference: Conduct coordination conference in compliance with requirements in Division 01 Section "Project Meetings" with attendance by representatives of Supplier(s), Installer(s), and Contractor(s) to review proper methods and the procedures for receiving, handling, and installing door hardware.

1. Prior to installation of door hardware, conduct a project specific training meeting to instruct the installing contractors' personnel on the proper installation and adjustment of their respective products. Product training to be attended by installers of door hardware (including electromechanical hardware) for aluminum, hollow metal and wood doors. Training will include the use of installation manuals, hardware schedules, templates and physical product samples as required.
2. Inspect and discuss electrical roughing-in, power supply connections, and other preparatory work performed by other trades.
3. Review sequence of operation narratives for each unique access controlled opening.
4. Review and finalize construction schedule and verify availability of materials.
5. Review the required inspecting, testing, commissioning, and demonstration procedures

H. At completion of installation, provide written documentation that components were applied to manufacturer's instructions and recommendations and according to approved schedule.

## 1.5 DELIVERY, STORAGE, AND HANDLING

A. Inventory door hardware on receipt and provide secure lock-up and shelving for door hardware delivered to Project site. Do not store electronic access control hardware, software or accessories at Project site without prior authorization.

B. Tag each item or package separately with identification related to the final Door Hardware Schedule, and include basic installation instructions with each item or package.

C. Deliver, as applicable, permanent keys, cylinders, cores, access control credentials, software and related accessories directly to Owner via registered mail or overnight package service. Instructions for delivery to the Owner shall be established at the "Keying Conference".

## 1.6 COORDINATION

A. Templates: Obtain and distribute to the parties involved templates for doors, frames, and other work specified to be factory prepared for installing standard and electrified hardware. Check Shop Drawings of other work to confirm that adequate provisions are made for locating and installing hardware to comply with indicated requirements.

B. Door Hardware and Electrical Connections: Coordinate the layout and installation of scheduled electrified door hardware and related access control equipment with required connections to source power junction boxes, low voltage power supplies, detection and monitoring hardware, and fire and detection alarm systems.

C. Door and Frame Preparation: Doors and corresponding frames are to be prepared, reinforced and pre-wired (if applicable) to receive the installation of the specified electrified, monitoring, signaling and access control system hardware without additional in-field modifications.

## 1.7 WARRANTY

A. General Warranty: Reference Division 01, General Requirements. Special warranties specified in this Article shall not deprive Owner of other rights Owner may have under other provisions of the Contract Documents and shall be in addition to, and run concurrent with, other warranties made by Contractor under requirements of the Contract Documents.

B. Warranty Period: Written warranty, executed by manufacturer(s), agreeing to repair or replace components of standard and electrified door hardware that fails in materials or workmanship within specified warranty period after final acceptance by the Owner. Failures include, but are not limited to, the following:

1. Structural failures including excessive deflection, cracking, or breakage.
2. Faulty operation of the hardware.
3. Deterioration of metals, metal finishes, and other materials beyond normal weathering.
4. Electrical component defects and failures within the systems operation.

C. Standard Warranty Period: One year from date of Substantial Completion, unless otherwise indicated.

D. Special Warranty Periods:

1. Ten years for mortise locks and latches.
2. Twenty five years for manual surface door closer bodies.
3. Two years for electromechanical door hardware.

## 1.8 MAINTENANCE SERVICE

A. Maintenance Tools and Instructions: Furnish a complete set of specialized tools and maintenance instructions as needed for Owner's continued adjustment, maintenance, and removal and replacement of door hardware.

## PART 2 - PRODUCTS

### 2.1 SCHEDULED DOOR HARDWARE

A. General: Provide door hardware for each door to comply with requirements in Door Hardware Sets and each referenced section that products are to be supplied under.

B. Designations: Requirements for quantity, item, size, finish or color, grade, function, and other distinctive qualities of each type of door hardware are indicated in the Door Hardware Sets at the end of Part 3. Products are identified by using door hardware designations, as follows:

1. Named Manufacturer's Products: Product designation and manufacturer are listed for each door hardware type required for the purpose of establishing requirements. Manufacturers' names are abbreviated in the Door Hardware Schedule.

C. Substitutions: Requests for substitution and product approval for inclusive mechanical and electromechanical door hardware in compliance with the specifications must be submitted in writing and in accordance with the procedures and time frames outlined in Division 01, Substitution Procedures. Approval of requests is at the discretion of the architect, owner, and their designated consultants.

### 2.2 HANGING DEVICES

A. Hinges: ANSI/BHMA A156.1 certified butt hinges with number of hinge knuckles and other options as specified in the Door Hardware Sets.

1. Quantity: Provide the following hinge quantity:

   a. Two Hinges: For doors with heights up to 60 inches.
   b. Three Hinges: For doors with heights 61 to 90 inches.
   c. Four Hinges: For doors with heights 91 to 120 inches.
   d. For doors with heights more than 120 inches, provide 4 hinges, plus 1 hinge for every 30 inches of door height greater than 120 inches.

2. Hinge Size: Provide the following, unless otherwise indicated, with hinge widths sized for door thickness and clearances required:

   a. Widths up to 3’0”: 4-1/2” standard or heavy weight as specified.
   b. Sizes from 3’1” to 4’0”: 5” standard or heavy weight as specified.

3. Hinge Weight and Base Material: Unless otherwise indicated, provide the following:

   a. Exterior Doors: Heavy weight, non-ferrous, ball bearing or oil impregnated bearing hinges unless Hardware Sets indicate standard weight.
   b. Interior Doors: Standard weight, steel, ball bearing or oil impregnated bearing hinges unless Hardware Sets indicate heavy weight.

4. Hinge Options: Comply with the following:

a. Non-removable Pins: Provide set screw in hinge barrel that, when tightened into a groove in hinge pin, prevents removal of pin while door is closed; for the all out-swinging lockable doors.

5. Manufacturers:

a. Hager Companies (HA).
b. McKinney Products; ASSA ABLOY Architectural Door Accessories (MK).
c. Stanley Hardware (ST).

B. Pivots: ANSI/BHMA A156.4, Grade 1, certified. Space intermediate pivots equally not less than 25 inches on center apart or not more than 35 inches on center for doors over 121 inches high. Pivots to be UL listed for windstorm where applicable.

1. Manufacturers:

a. Architectural Builders Hardware (AH).
b. Rixson Door Controls (RF).

## 2.3 DOOR OPERATING TRIM

A. Door Push Plates and Pulls: ANSI/BHMA A156.6 certified door pushes and pulls of type and design specified in the Hardware Sets. Coordinate and provide proper width and height as required where conflicting hardware dictates.

1. Push/Pull Plates: Minimum .050 inch thick, size as indicated in hardware sets, with beveled edges, secured with exposed screws unless otherwise indicated.
2. Door Pull and Push Bar Design: Size, shape, and material as indicated in the hardware sets. Minimum clearance of 2 1/2-inches from face of door unless otherwise indicated.
3. Offset Pull Design: Size, shape, and material as indicated in the hardware sets. Minimum clearance of 2 1/2-inches from face of door and offset of 90 degrees unless otherwise indicated.
4. Fasteners: Provide manufacturer's designated fastener type as indicated in Hardware Sets.

5. Manufacturers:

a. Burns Manufacturing (BU).
b. Hiawatha, Inc. (HI).
c. Rockwood Products; ASSA ABLOY Architectural Door Accessories (RO).

## 2.4 CYLINDERS AND KEYING

A. General: Cylinder manufacturer to have minimum (10) years experience designing secured master key systems and have on record a published security keying system policy.

B. Source Limitations: Obtain each type of keyed cylinder and keys from the same source manufacturer as locksets and exit devices, unless otherwise indicated.

C. Cylinders: Original manufacturer cylinders complying with the following:

1. Mortise Type: Threaded cylinders with rings and cams to suit hardware application.
2. Rim Type: Cylinders with back plate, flat-type vertical or horizontal tailpiece, and raised trim ring.
3. Bored-Lock Type: Cylinders with tailpieces to suit locks.
4. Mortise and rim cylinder collars to be solid and recessed to allow the cylinder face to be flush and be free spinning with matching finishes.
5. Keyway: Match Facility Standard.

D. Keying System: Each type of lock and cylinders to be factory keyed.

1. Conduct specified "Keying Conference" to define and document keying system instructions and requirements.
2. Furnish factory cut, nickel-silver large bow permanently inscribed with a visual key control number as directed by Owner.
3. Existing System: Key locks to Owner's existing system.

E. Key Quantity: Provide the following minimum number of keys:

1. Change Keys per Cylinder: Two (2)
2. Master Keys (per Master Key Level/Group): Five (5).
3. Construction Keys (where required): Ten (10).

F. Construction Keying: Provide construction master keyed cylinders.

G. Key Control Cabinet: Provide a key control system including envelopes, labels, and tags with self-locking key clips, receipt forms, 3-way visible card index, temporary markers, permanent markers, and standard metal cabinet. Key control cabinet shall have expansion capacity of 150% of the number of locks required for the project.

1. Manufacturers:

a. Lund Equipment (LU).
b. MMF Industries (MM).
c. Telkee (TK).

H. Furnish a grand Master, Master, keyed alike or keyed different system as directed by the City Representative or Architect

I. Provide construction keying for doors required to be locked during construction; remove temporary cores or inserts immediately prior to occupancy. Furnish permanent keys (and cores if applicable) directly to City of Morgan Hill Representative.

J. Provide standard “6” pin bow key blank, tagged to identify.

## 2.5 MECHANICAL LOCKS AND LATCHING DEVICES

A. Mortise Locksets, Grade 1 (Heavy Duty): ANSI/BHMA A156.13, Series 1000, Operational Grade 1 certified. Locksets are to be manufactured with a corrosion resistant steel case and be field-reversible for handing without disassembly of the lock body.

1. Manufacturers:

   a. Sargent Manufacturing (SA) – 8200 Series.
   b. Schlage (SC) – L9000 Series.

## 2.6 LOCK AND LATCH STRIKES

A. Strikes: Provide manufacturer's standard strike with strike box for each latch or lock bolt, with curved lip extended to protect frame, finished to match door hardware set, unless otherwise indicated, and as follows:

1. Flat-Lip Strikes: For locks with three-piece antifriction latchbolts, as recommended by manufacturer.
2. Extra-Long-Lip Strikes: For locks used on frames with applied wood casing trim.
3. Aluminum-Frame Strike Box: Provide manufacturer's special strike box fabricated for aluminum framing.
4. Double-lipped strikes: For locks at double acting doors. Furnish with retractable stop for rescue hardware applications.

B. Standards: Comply with the following:

1. Strikes for Mortise Locks and Latches: BHMA A156.13.
2. Strikes for Bored Locks and Latches: BHMA A156.2.
3. Strikes for Auxiliary Deadlocks: BHMA A156.36.
4. Dustproof Strikes: BHMA A156.16.

## 2.7 DOOR CLOSERS

A. All door closers specified herein shall meet or exceed the following criteria:

1. General: Door closers to be from one manufacturer, matching in design and style, with the same type door preparations and templates regardless of application or spring size. Closers to be non-handed with full sized covers including installation and adjusting information on inside of cover.

2. Standards: Closers to comply with UL-10C for Positive Pressure Fire Test and be U.L. listed for use of fire rated doors.

3. Size of Units: Comply with manufacturer's written recommendations for sizing of door closers depending on size of door, exposure to weather, and anticipated frequency of use. Where closers are indicated for doors required to be accessible to the physically handicapped, provide units complying with ANSI ICC/A117.1.

4. Closer Arms: Provide heavy duty, forged steel closer arms unless otherwise indicated in Hardware Sets.

5. Closers shall not be installed on exterior or corridor side of doors; where possible install closers on door for optimum aesthetics.

6. Closer Accessories: Provide door closer accessories including custom templates, special mounting brackets, spacers and drop plates as required for proper installation. Provide through-bolt and security type fasteners as specified in the hardware sets.

B. Door Closers, Overhead Concealed (Narrow Profile): ANSI/BHMA 156.4 certified Grade 1 door closers designed for narrow profile frames and doors. Closers to have fully concealed body in the frame head for offset hung applications, with separate and independent valves for closing speed and backcheck adjustments.

1. Manufacturers:

a. LCN Closers (LC) - 2030 Series.
b. Rixson Door Controls (RF) - 91 Series.

## 2.8 ARCHITECTURAL TRIM

A. Door Protective Trim

1. General: Door protective trim units to be of type and design as specified below or in the Hardware Sets.

2. Size: Fabricate protection plates (kick, armor, or mop) not more than 2" less than door width (LDW) on stop side of single doors and 1” LDW on stop side of pairs of doors, and not more than 1" less than door width on pull side. Coordinate and provide proper width and height as required where conflicting hardware dictates. Height to be as specified in the Hardware Sets.

3. Where plates are applied to fire rated doors with the top of the plate more than 16” above the bottom of the door, provide plates complying with NFPA 80. Consult manufacturer’s catalog and template book for specific requirements for size and applications.

4. Protection Plates: ANSI/BHMA A156.6 certified protection plates (kick, armor, or mop), fabricated from the following:

a. Stainless Steel: 300 grade, 050-inch thick.

5. Options and fasteners: Provide manufacturer's designated fastener type as specified in the Hardware Sets. Provide countersunk screw holes.

6. Manufacturers:

a. Hager Companies (HA).
b. Hiawatha, Inc. (HI).

c. Rockwood Products; ASSA ABLOY Architectural Door Accessories (RO).

## 2.9 DOOR STOPS AND HOLDERS

A. General: Door stops and holders to be of type and design as specified below or in the Hardware Sets.

B. Door Stops and Bumpers: ANSI/BHMA A156.16, Grade 1 certified door stops and wall bumpers. Provide wall bumpers, either convex or concave types with anchorage as indicated, unless floor or other types of door stops are specified in Hardware Sets. Do not mount floor stops where they will impede traffic. Where floor or wall bumpers are not appropriate, provide overhead type stops and holders.

1. Manufacturers:

a. Hager Companies (HA).
b. Hiawatha, Inc. (HI).
c. Rockwood Products; ASSA ABLOY Architectural Door Accessories (RO).

C. Overhead Door Stops and Holders: ANSI/BHMA A156.6, Grade 1 certified overhead stops and holders to be surface or concealed types as indicated in Hardware Sets. Track, slide, arm and jamb bracket to be constructed of extruded bronze and shock absorber spring of heavy tempered steel. Provide non-handed design with mounting brackets as required for proper operation and function.

1. Manufacturers:

a. Rixson Door Controls (RF).
b. Rockwood Products; ASSA ABLOY Architectural Door Accessories (RO).
c. Sargent Manufacturing (SA).

## 2.10 ARCHITECTURAL SEALS

A. General: Thresholds, weatherstripping, and gasket seals to be of type and design as specified below or in the Hardware Sets. Provide continuous weatherstrip gasketing on exterior doors and provide smoke, light, or sound gasketing on interior doors where indicated. At exterior applications provide non-corrosive fasteners and elsewhere where indicated.

B. Smoke Labeled Gasketing: Assemblies complying with NFPA 105 that are listed and labeled by a testing and inspecting agency acceptable to authorities having jurisdiction, for smoke control ratings indicated, based on testing according to UL 1784.

1. Provide smoke labeled perimeter gasketing at all smoke labeled openings.

C. Fire Labeled Gasketing: Assemblies complying with NFPA 80 that are listed and labeled by a testing and inspecting agency acceptable to authorities having jurisdiction, for fire ratings indicated, based on testing according to UL-10C.

1. Provide intumescent seals as indicated to meet UL10C Standard for Positive Pressure Fire Tests of Door Assemblies, and NPFA 252, Standard Methods of Fire Tests of Door Assemblies.

D. Sound-Rated Gasketing: Assemblies that are listed and labeled by a testing and inspecting agency, for sound ratings indicated.

E. Replaceable Seal Strips: Provide only those units where resilient or flexible seal strips are easily replaceable and readily available from stocks maintained by manufacturer.

F. Manufacturers:

1. National Guard Products (NG).
2. Pemko Products; ASSA ABLOY Architectural Door Accessories (PE).
3. Reese Enterprises, Inc. (RE).

2.11 FABRICATION

A. Fasteners: Provide door hardware manufactured to comply with published templates generally prepared for machine, wood, and sheet metal screws. Provide screws according to manufacturers recognized installation standards for application intended.

2.12 FINISHES

A. Standard: Designations used in the Hardware Sets and elsewhere indicate hardware finishes complying with ANSI/BHMA A156.18, including coordination with traditional U.S. finishes indicated by certain manufacturers for their products.

B. Provide quality of finish, including thickness of plating or coating (if any), composition, hardness, and other qualities complying with manufacturer's standards, but in no case less than specified by referenced standards for the applicable units of hardware

C. Protect mechanical finishes on exposed surfaces from damage by applying a strippable, temporary protective covering before shipping.

**PART 3 - EXECUTION**

3.1 EXAMINATION

A. Examine scheduled openings, with Installer present, for compliance with requirements for installation tolerances, labeled fire door assembly construction, wall and floor construction, and other conditions affecting performance.

B. Notify architect of any discrepancies or conflicts between the door schedule, door types, drawings and scheduled hardware. Proceed only after such discrepancies or conflicts have been resolved in writing.

## 3.2 PREPARATION

A. Hollow Metal Doors and Frames: Comply with ANSI/DHI A115 series.

B. Wood Doors: Comply with ANSI/DHI A115-W series.

## 3.3 INSTALLATION

A. Install each item of mechanical and electromechanical hardware and access control equipment to comply with manufacturer's written instructions and according to specifications.

1. Installers are to be trained and certified by the manufacturer on the proper installation and adjustment of fire, life safety, and security products including: hanging devices; locking devices; closing devices; and seals.

B. Mounting Heights: Mount door hardware units at heights indicated in following applicable publications, unless specifically indicated or required to comply with governing regulations:

1. Standard Steel Doors and Frames: DHI's "Recommended Locations for Architectural Hardware for Standard Steel Doors and Frames."
2. Wood Doors: DHI WDHS.3, "Recommended Locations for Architectural Hardware for Wood Flush Doors."
3. Where indicated to comply with accessibility requirements, comply with ANSI A117.1 "Accessibility Guidelines for Buildings and Facilities."
4. Provide blocking in drywall partitions where wall stops or other wall mounted hardware is located.

C. Retrofitting: Install door hardware to comply with manufacturer's published templates and written instructions. Where cutting and fitting are required to install door hardware onto or into surfaces that are later to be painted or finished in another way, coordinate removal, storage, and reinstallation of surface protective trim units with finishing work specified in Division 9 Sections. Do not install surface-mounted items until finishes have been completed on substrates involved.

D. Thresholds: Set thresholds for exterior and acoustical doors in full bed of sealant complying with requirements specified in Division 7 Section "Joint Sealants."

E. Storage: Provide a secure lock up for hardware delivered to the project but not yet installed. Control the handling and installation of hardware items so that the completion of the work will not be delayed by hardware losses before and after installation.

## 3.4 FIELD QUALITY CONTROL

A. Field Inspection: Supplier will perform a final inspection of installed door hardware and state in report whether work complies with or deviates from requirements, including whether door hardware is properly installed, operating and adjusted.

## 3.5 ADJUSTING

A. Initial Adjustment: Adjust and check each operating item of door hardware and each door to ensure proper operation or function of every unit. Replace units that cannot be adjusted to operate as intended. Adjust door control devices to compensate for final operation of heating and ventilating equipment and to comply with referenced accessibility requirements.

## 3.6 CLEANING AND PROTECTION

A. Protect all hardware stored on construction site in a covered and dry place. Protect exposed hardware installed on doors during the construction phase. Install any and all hardware at the latest possible time frame.

B. Clean adjacent surfaces soiled by door hardware installation.

C. Clean operating items as necessary to restore proper finish. Provide final protection and maintain conditions that ensure door hardware is without damage or deterioration at time of owner occupancy.

D. Upon completion, clean the work of this Section in accordance with recommendations of the manufacturers of the materials used

E. Provide required protection of products to prevent damage and wear prior to acceptance of the work by the City.

## 3.7 DEMONSTRATION

A. Instruct Owner's maintenance personnel to adjust, operate, and maintain mechanical and electromechanical door hardware.

## 3.8 DOOR HARDWARE SETS

A. The hardware sets represent the design intent and direction of the owner and architect. They are a guideline only and should not be considered a detailed hardware schedule. Discrepancies, conflicting hardware and missing items should be brought to the attention of the architect with corrections made prior to the bidding process. Omitted items not included in a hardware set should be scheduled with the appropriate additional hardware required for proper application and functionality.

B. The supplier is responsible for handing and sizing all products as listed in the door hardware sets. Quantities listed are for each pair of doors, or for each single door.

## Hardware Sets

### Set: 15.04.26

Doors: 100A (Relocated existing door & hardware, for reference only)

| | | | | |
|---|---|---|---|---|
| 2 | Pivot Set | 195 | 626 | RF |
| 1 | Intermediate Pivot | M19 | 626 | RF |
| 1 | Electrified Inter Pivot | EM19 | 626 | RF |
| 1 | Concealed Vert Rod Exit | 24-C EO | US32D | FA |
| 1 | Electrified Conc. Vert Rod Exit | EL 24-C 718NL Match | US32D | FA |
| 1 | Cylinder | Facility Standard | | SC |
| 4 | Door Pull | BF158 Mtg-Type 16HD | US32D | RO |
| 2 | Surf Overhead Hold Open | 9-X26 | 652 | RF |
| 2 | Concealed Closer | 203X STD | US26D | LC |
| 1 | Threshold | Per Detail | | PE |
| 1 | Power Supply | PS900 Series | | VD |
| 1 | Gasketing | by Door Manufacturer | | OT |

Notes: Door normally closed and locked. Presenting valid credential will retract latch bolt allowing entry. Manual key override In case of power loss, door will remain locked (fail secure). Free egress at all times.

### Set: 15.10.60

Doors: 128C, (126C - Relocated existing door & hardware, for reference only)

| | | | | |
|---|---|---|---|---|
| 1 | Pivot Set | 195 | 626 | RF |
| 1 | Intermediate Pivot | M19 | 626 | RF |
| 1 | Rim Exit Device | 24-R EO | US32D | FA |
| 1 | Concealed Closer | 203X STD | US26D | LC |
| 1 | Door Stop | 462 | US2C | RO |
| 1 | Threshold | Per Detail | | PE |
| 1 | Gasketing | by Door Manufacturer | | OT |

**Set: 45.13.60**

Doors: 128A

| | | | | |
|---|---|---|---|---|
| 1 | Pivot Set | 195 | 626 | RF |
| 1 | Intermediate Pivot | M19 | 626 | RF |
| 1 | Rim Exit Device | 24-R 712L DAN Match | US32D | FA |
| 1 | Cylinder | Facility Standard 203X | | SC |
| 1 | Concealed Closer | H | US26D | LC |
| 1 | Kick Plate | K1050 10" HVBEV CSK | US32D | RO |
| 1 | Wall Stop | 406 | US32D | RO |
| 1 | Threshold | Per Detail | | PE |

**Set: 55.04.55**

Doors: 100B, 128B

| | | | | |
|---|---|---|---|---|
| 4 | Hinge (heavy weight) | T4A3786 4-1/2" x 4-1/2" | US26D | MK |
| 1 | Classroom Lock | L9070 06A | 630 | SC |
| 1 | Surf Overhead Hold Open | 9-X26 | 652 | RF |
| 3 | Silencer | 608-RKW | | RO |
| 1 | Threshold | Per Detail | | PE |

**Set: 55.04.55**

Door: 126D – 90 min

| | | | | | |
|---|---|---|---|---|---|
| 4 | Hinge (heavy weight) | T4A3786 4-1/2" x 4-1/2" | US26D | MK | 4 |
| 1 | Classroom Lock | L9070 | 630 | SC | 1 |
| 1 | Surface Closer | 06A 7500 | 689 | NO | 1 |
| 1 | Kick Plate | K1050 10" HVBEV CSK | US32D | RO | 1 |
| 1 | Wall Stop | 406 | US32D | RO | 1 |
| 1 | Gasketing | S88BL | | PE | 1 |

**Set: 45.13.49**

Doors: 100C – 90 min

| | | | | |
|---|---|---|---|---|
| 8 | Hinge (heavy weight) | T4A3786 4-1/2" x 4-1/2" | US26D | MK |
| 1 | Fire Rated Conc Vert | 8 F-25-C 510L DAN 1 | US26D | FA |

| | | | | | |
|---|---|---|---|---|---|
| | Rod | | | | |
| 1 | Fire Rated Conc Vert Rod | F-25-C EO DAN | US26D | FA | 1 |
| 1 | Cylinder | Match Facility | | SC | 1 |
| 1 | Surface Closer | Standard 7243MPDO | 689 | NO | 1 |
| 2 | Surface Closer | 7243MPSO | 689 | NO | 2 |
| 2 | Kick Plate | K1050 10" HVBEV CSK | US32D | RO | 2 |
| 1 | Threshold | 158A | | PE | 1 |
| 1 | Gasketing | S88BL | | PE | 1 |
| 1 | Meeting Astragal (Set) | 18041CNB | | PE | 1 |
| 1 | Power Supply | BPS Series | | YA | 1 |

3.5 WARRANTY

A. The products delivered shall be free from defects.

B. Manufacturer's standard performance warranty, as available for specified installation and environmental conditions.

**END OF SECTION**

# SECTION 088100 – GLASS AND GLAZING

## 1.0 GENERAL

### 1.1 SUMMARY

A. This Section includes all labor, materials, equipment, operations, or methods listed, mentioned or scheduled on the plans and/or herein specified, including all incidentals necessary and required for completion of work under this Section.

B. Provide and install glass and glazing units and required accessories as shown on project Drawings and as specified herein, including:

1. Windows

   a. Standard

2. Entrance doors (Storefront)

### 1.2 RELATED SECTIONS

A. Documents affecting work of this Section include, but are not necessarily limited to, General Conditions, Special Conditions and Division 1 of these Contract Documents.

B. Section 081116, Aluminum Interior Doors and Frames

C. Section 084113, Aluminum-Framed Entrances and Storefronts

### 1.3 REFERENCES

A. American Architectural Manufacturers Association:

1. AAMA 800 - Voluntary Specifications and Test Methods for Sealants

B. ASTM International (ASTM):

1. ASTM C509 - Specification for Elastomeric Cellular Preformed Gasket and Sealing Material

2. ASTM C864 - Specification for Dense Elastomeric Compression Seal Gaskets, Setting Blocks, and Spacers

3. ASTM C920 - Specification for Elastomeric Joint Sealants.

4. ASTM C1036 - Specification for Flat Glass

5. ASTM C1048 - Specification for Heat-Treated Flat Glass - Kind HS, Kind FT Coated and Uncoated Glass

6. ASTM C1087 - Test Method for Determining Compatibility of Liquid-Applied Sealants with Accessories Used in Structural Glazing Systems

7. ASTM C1115 - Specification for Dense Elastomeric Silicone Rubber Gaskets and Accessories

8. ASTM C1172 - Specification for Laminated Architectural Flat Glass

9. ASTM C1281 - Specification for Preformed Tape Sealants for Glazing Applications

10. ASTM C1330 - Specification for Cylindrical Sealant Backing for Use with Cold Liquid Applied Sealants

11. ASTM C1376 - Specification for Pyrolytic and Vacuum Deposition Coatings on Glass

12. ASTM E774 - Specification for the Classification of the Durability of Sealed Insulating Glass Units

13. ASTM E1300 - Practice for Determining Load Resistance of Glass in Buildings

14. ASTM E2190 - Standard Specification for Insulating Glass Unit Performance and Evaluation

C. Code of Federal Regulations:

1. 16 CFR 1201 - Safety Standard for Architectural Glazing Materials

D. Glass Association of North America (GANA):

1. Glazing Manual

2. Laminated Glass Design Guide

3. Engineering Standards Manual

E. The Insulating Glass Manufacturers Alliance (IGMA):

1. IGMA TB-3001 - Sloped Glazing Guidelines

2. SIGMA TM-3000 - Glazing Guidelines for Sealed Insulating Glass Units

F. Lawrence Berkeley National Laboratory; Environmental Energy Technologies Division; Building Technologies Department; Windows & Daylighting Group, windows.lbl.gov/software:

1. LBL-44789 WINDOW 5.0 - A PC Program for Analyzing Window Thermal Performance

G. National Fenestration Rating Council (NFRC):

1. NFRC 100 - Procedure for Determining Fenestration Product Thermal Properties

2. NFRC 200 - Procedure for Determining Fenestration Product Solar Heat Gain Coefficients at Normal Incidence

3. NFRC 300 - Procedures for Determining Solar Optical Properties of Simple Fenestration Products

1.4 DEFINITIONS

A. Manufacturers of Primary Glass: Firms that produce primary glass, as defined in referenced industry publications.

B. Manufacturers/Fabricators of Glass Products: Firms that utilize primary glass in the production of glass products that may include coated glass, laminated glass, and insulating glass.

C. Sealed Insulating Glass Unit Surfaces:

1. Surface 1: Exterior surface of outer lite

2. Surface 2: Interspace-facing surface of outer lite

3. Surface 3: Interspace-facing surface of inner lite

4. Surface 4: Interior surface of inner lite

1.5 PERFORMANCE REQUIREMENTS

A. General: Provide glazing systems that will withstand indicated loads and normal thermal movement without failure, including loss or glass breakage resulting from defective manufacture, fabrication, or installation; failure of glazing systems to remain watertight and airtight; or deterioration of glazing materials.

B. Glass Design: Glass thicknesses indicated are minimums. Select actual glass lite thicknesses by analyzing loads and conditions. Provide glass lites in the thicknesses and in strengths required to meet or exceed the following criteria:

C. Thermal Movements: Allow for thermal movements of glazing components and glass framing members resulting from a temperature change range of 120 deg F ambient and 180 deg F material surfaces.

D. Thermal and Optical Performance Properties: Provide glass meeting specified performance properties, based on manufacturer's published test data for units of thickness indicated.

1.7 SUBMITTALS

A. Comply with provisions of Section 013300, Submittal Procedures.

B. Product Data: Provide manufacturer's data sheets for each glass product and glazing material.

C. Samples: Provide 12-inch-square for each type of glass product other than monolithic clear float glass or clear float glass only set in insulated glass units.

D. Provide Shop Drawings.

E. Glazing Schedule: Prepare schedule using designations used on Drawings.

F. Product Certificates: Signed by manufacturers/fabricators of glass products certifying that products furnished comply with project requirements.

G. Preconstruction Adhesion and Compatibility Test Report: From glazing sealant manufacturer, based on submitted samples or acceptable data from previous testing of current formulations with similar products.

H. Qualification Information: For Installer firm and Installer's manufacturer/fabricator-trained field supervisor.

I. Warranties: Submit sample meeting warranty requirements of this Section.

1.8 QUALITY ASSURANCE

A. Manufacturer/Source: Obtain each type of glass product from a single primary glass manufacturer and a single manufacturer/fabricator for each glass product type.

1. For glass sputter-coated with solar-control low-e coatings, obtain glass products in fabricated units from a manufacturer/fabricator certified by the primary glass manufacturer.

B. Installer Qualifications: Experienced Installer with minimum of 5 successful completed projects of similar materials and scope, approved by glass product manufacturer/fabricator.

C. Preconstruction Adhesion and Compatibility Testing: Submit glass units, glazing materials, and glass-framing members with applicable finish to elastomeric glazing sealant manufacturer for determination of sealant compatibility, priming, and preparation requirements for optimum adhesion and performance.

D. Safety Glazing Products: Comply with size, glazing type, location, and testing requirements of 16 CFR 1201 for Category I and II glazing products, and requirements of authorities having jurisdiction.

E. Glazing Industry Publications: Comply with glass product manufacturer's recommendations and the following:

1. GANA Publications: GANA Laminated Division's "Laminated Glass Design Guide" and GANA's "Glazing Manual."

2. IGMA Publication for Insulating Glass: SIGMA TM-3000, "Glazing Guidelines for Sealed Insulating Glass Units."

F. Insulating-Glass Certification Program: Indicate compliance with requirements of Insulating Glass Certification Council on applicable glazing products.

G. Preinstallation Conference: Conduct conference at Project site in compliance with Sections 013113, Project Coordination and 013119, Project Meetings.

1.9 DELIVERY, STORAGE, AND HANDLING

A. Protect glazing materials during shipping, handling, and storage to prevent breakage, scratching, damage to seals, or other visible damage. Deliver, unload, store, and erect glazing materials without exposing panels to damage from construction operations.

1. Comply with manufacturer's venting and sealing recommendations for shipping and handling of insulating glass units exposed to substantial altitude change.

1.10 WARRANTY

A. Warranty for Coated-Glass Products: Manufacturer's standard form, signed by coated-glass product primary manufacturer or manufacturer/fabricator, as applicable, agreeing to replace coated-glass units that display peeling, cracking, and other deterioration in metallic coating under normal use, within ten (10) years of date of Substantial Completion.

B. Warranty for Insulating Glass: Manufacturer's standard form, signed by insulating-glass product manufacturer/fabricator, agreeing to replace insulating-glass units that exhibit failure of hermetic seal under normal use evidenced by the obstruction of vision by dust, moisture, or film on interior surfaces of glass, within ten (10) years of date of Substantial Completion.

C. Installer's Warranty: Form acceptable to City, signed by glass product Installer, agreeing to replace glass products that deteriorate, or that exhibit damage or deterioration of glass or glazing products due to faulty installation, within two (2) years of date of Substantial Completion.

## 2.0 PRODUCTS

### 2.1 MANUFACTURER

A. Viracon, Inc. 800 Park Drive - Owatonna, MN 55060, 1-800-533-2080, 1-507-451-3555, www.viracon.com or approved equal.

### 2.2 MATERIALS

A. Flat Glass Materials

1. Type FG-2 – Safety Glass: Units shall be Kind FT (fully tempered), Condition A uncoated, Type 1 transparent flat, Class 1 clear (ASTM C1048). Quality q3 glazing select conforming to ANSI X97.1.

   a. Thickness: ¼ inch thick minimum, greater where recommended by manufacturer to meet wind load requirements.

2. Type FG-3 Fire Rated Glass: ASTM E-163 for fire rating; ANSI Z97.1 for Impace Safety Rating.

   a. 1” thick, 60 minute rated contraflam 60-N2

B. Sealed Insulating Glass Materials

1. Type IGU-2: Double pane with glass elastomer edge seal (ASTM E773 & E774), each pane fully tempered. Equal to Viracon VE1-2M#2.

2. Performance Characteristics:

   a. Unit Overall Thickness: 1”

   b. Transmittance:

      1) Ultra Voilet: 10 %

      2) Visible: 70 %

      3) Solar : 33%

   c. Reflectance:

      1) Exterior: 11 %

      2) U-Value (ASHRAE):

      3) Winter: 0.29

4) Summer: 0.26

f. Coefficients:

1) Shading Coefficient: 0.44

2) Solar Heat Gain Coefficient: 0.38

C. Glazing Accessories:

1. Cleaners, Primers, and Sealers: Types recommended by sealant or gasket manufacturer.

2. Glazing Tape: Closed cell polyvinyl chloride foam, maximum water absorption by volume 2 percent, designed for 25 percent compression percent for air barrier and vapor retarder seal, black color, coiled on release paper over adhesive on two sides; widths required for specified installation, and complying with AAMA 800.

3. Glazing Gaskets:

a. Dense Compression Gaskets: ASTM C864, neoprene or EPDM, or ASTM C1115, silicone or thermoplastic polyolefin rubber, as recommended by glazing product manufacturer for application, molded or extruded shape to fit glazing channel retaining slot; black color.

b. Soft Compression Gaskets: ASTM C509, Type II, black, molded or extruded, neoprene, EPDM, silicone or thermoplastic polyolefin rubber, of profile and hardness required to maintain watertight seal.

4. Setting Blocks: ASTM C864, neoprene, 80 to 90 Shore A durometer hardness; length 4 inches, width of glazing rabbet space less 1/16 inch, height required for glazing method, pane weight, and pane area.

5. Spacer Shims: ASTM C864, neoprene, 50 to 60 Shore A durometer hardness; length 3 inches, one half height of glazing stop, thickness required for application, one face self-adhesive.

6. Edge Blocks: Elastomeric material of hardness needed to limit glass lateral movement (side walking).

7. Glazing Sealants: ASTM C920, type recommended by glazing product manufacturer for application indicated, complying with requirements of Section 079000, Joint Protection: Sealants and Caulking, color as selected by Architect.

8. Cylindrical Glazing Sealant Backing: ASTM C1330, Type O (open-cell material), of size and density to control glazing sealant depth and otherwise produce optimum glazing sealant performance.

2.3 FABRICATION OF GLAZING UNITS

A. General: Fabricate glazing units in dimensions required, with edge and face clearances, edge and surface conditions, and bite in accordance with glazing product manufacturer/fabricator's instructions and referenced glazing publications.

**3.0 EXECUTION**

3.1 EXAMINATION OF SURFACE CONDITIONS

A. Prior to work of this Section, carefully inspect the installed work of other trades and verify that all such work is complete to the point where the work of this Section may properly commence.

1. Verify that glazing may be performed in strict accordance with all pertinent codes and regulations, the original design, and the referenced standards.

B. Verify that glazing channels are clean and ready to accept glazing installation, and that weeps are unobstructed. Confirm that minimum required face and edge clearances will be maintained.

C. Examine glazing units prior to setting. Reject units that display edge or face damage that may impede performance of unit or that will be visible when installed.

D. In the event of discrepancy, immediately notify the City. Do not proceed with glazing in areas of discrepancy until all such discrepancies and unsatisfactory conditions have been fully resolved and corrected.

3.2 PREPARATION

A. Clean glazing channels with recommended solvent and wipe dry. Apply primers to joint surfaces to ensure adhesion of sealants, unless preconstruction sealant-substrate testing indicates no primer is required.

3.3 GLAZING INSTALLATION

A. General: Install glass and glazing materials in accordance with instructions of manufacturers and requirements of GANA Glazing Manual.

1. Set glazing material in a true plane, tight and straight, allowing for expansion in accordance with manufacturers published recommendations, using compression gaskets, glazing, tape and sealant in accordance with manufacturer's recommendations.

2. Install setting blocks of size and in location required by glass manufacturer. Set blocks in bed of approved sealant.

3. Provide spacers for glass lites as recommended, based upon size of glass unit.

4. Comply with glass manufacturer's limits on edge pressures.

5. Ensure that glazing units are set with proper and consistent orientation of glass units toward interior and exterior.

6. Provide edge blocking where recommended.

7. Install sealants in accordance with requirements of Section 079000, Joint Protection: Sealants and Caulking.

B. Tape Glazing: Place tapes on fixed stops positioned to be flush or protrude slightly when compressed by glass. Install tapes continuously. Form butt joints at corners and where required, and seal tape joints with approved sealant.

1. Apply heel bead of glazing sealant along intersection of permanent stop and frame for continuity of air and vapor seal.

2. Set glass lites centered in openings on setting blocks.

3. Install removable stops, and insert dense compression gaskets at corners, working toward centers of lites, compressing glass against tape on fixed stops.

4. Apply cap bead of elastomeric sealant over exposed edge of tape or gasket on exterior of glass unit.

C. Sealant Glazing: Install continuous spacers between glass lites and glazing stops. Install cylindrical sealant backing where recommended, in width and depth recommended to provide proper depth and width of sealant bead. Ensure sealant cannot block weep system.

1. Install sealant under pressure to completely fill glazing channel without voids, with full bond to glass and channel surfaces.

2. Tool sealant bead to proper profile providing wash away from glass.

D. Sealant Glazing for Butt Glazing:

1. Brace glass in position for duration of glazing process

2. Mask edges of glass at adjoining glass edges and between glass edges and framing members.

3. Secure small diameter non-adhering foamed rod on back side of joint.

4. Apply sealant to open side of joint in continuous operation; completely fill joint without displacing foam rod; tool sealant surface smooth to concave profile.
5. Allow sealant to cure, then remove foam backer rod.
6. Apply sealant to opposite side; tool sealant smooth to concave profile.
7. Remove masking tape.

E. Gasket Glazing: Fabricate gaskets to fit openings exactly. Allow for stretching of gaskets during installation.

1. Set soft compression gasket against fixed stop or frame, secure, with bonded miter cut joints at corners.
2. Set glass lites centered in openings on setting blocks.
3. Install removable stops, and insert dense compression gaskets at corners, working toward centers of lites, compressing glass against soft compression gaskets and to produce a weathertight seal. Seal joints in gaskets. Allow gaskets to protrude past face of glazing stops.

3.4 CLEANING AND PROTECTION

A. Protect installed glass from damage. Attach streamers or warning tape to framing members, away from contact with glass. Remove nonpermanent labels.

B. Protect glass from contact with contaminating substances during construction. Immediately clean glass exposed to contamination using methods as recommended by glass manufacturer.

C. Within 5 working days prior to inspection for Substantial Completion, clean all exposed glass surfaces using methods recommended by manufacturer. Remove glazing compounds from framing surfaces.

1. Clean with a mild soap or detergent and lukewarm water, using a clean sponge or soft cloth. Rinse well with clean water. Do not use abrasive or highly alkaline cleaner, razor blades, benzene, acetone, gasoline or carbon tetrachloride. Avoid cleaning during times when surface is exposed to hot direct sun.

D. Remove and replace broken or damaged glass *at no cost to the City*.

**END OF SECTION**

# SECTION 088300 – MIRRORS

## 1.0 GENERAL

### 1.1 SUMMARY

A. This Section includes all labor, materials, equipment, operations, or methods listed, mentioned or scheduled on the plans and/or herein specified, including all incidentals necessary and required for completion of work under this Section.

B. Provide and install silvered flat glass mirrors and required accessories as shown on project Drawings and as specified herein, including:

1. Mirrors

a. Film-backed tempered, glass mirrors qualifying as safety glazing

### 1.2 RELATED SECTIONS

A. Documents affecting work of this Section include, but are not necessarily limited to, General Conditions, Special Conditions and Division 1 of these Contract Documents.

### 1.3 REFERENCES

A. American Architectural Manufacturers Association:

1. AAMA 800 - Voluntary Specifications and Test Methods for Sealants

B. ASTM International (ASTM):

1. ASTM C509 - Specification for Elastomeric Cellular Preformed Gasket and Sealing Material

2. ASTM C864 - Specification for Dense Elastomeric Compression Seal Gaskets, Setting Blocks, and Spacers

3. ASTM C920 - Specification for Elastomeric Joint Sealants.

4. ASTM C1036 - Specification for Flat Glass

5. ASTM C1048 - Specification for Heat-Treated Flat Glass - Kind HS, Kind FT Coated and Uncoated Glass

8. ASTM C1172 - Specification for Laminated Architectural Flat Glass

9. ASTM C1281 - Specification for Preformed Tape Sealants for Glazing Applications

10. ASTM C1330 - Specification for Cylindrical Sealant Backing for Use with Cold Liquid Applied Sealants

11. ASTM C1376 - Specification for Pyrolytic and Vacuum Deposition Coatings on Glass

C. Code of Federal Regulations:

1. 16 CFR 1201 - Safety Standard for Architectural Glazing Materials

D. Glass Association of North America (GANA):

1. Glazing Manual

2. Laminated Glass Design Guide

3. Engineering Standards Manual

1.4 DEFINITIONS

A. Manufacturers of Primary Mirrors: Firms that produce primary mirrors, as defined in referenced industry publications.

B. Manufacturers/Fabricators of Mirror Products: Firms that utilize primary mirrors in the production of mirror products.

1.5 PERFORMANCE REQUIREMENTS

A. General: Provide mirrors that will withstand indicated loads and normal thermal movement without failure, including loss or glass breakage resulting from defective manufacture, fabrication, or installation; failure of glazing systems to remain watertight and airtight; or deterioration of glazing materials.

B. Glass Design: Glass thicknesses indicated are minimums. Select actual glass thicknesses by analyzing loads and conditions. Provide glass in the thicknesses and in strengths required to meet or exceed the following criteria:

C. Thermal Movements: Allow for thermal movements of mirror components and framing members resulting from a temperature change range of 120 deg F ambient and 180 deg F material surfaces.

D. Thermal and Optical Performance Properties: Provide glass meeting specified performance properties, based on manufacturer's published test data for units of thickness indicated.

1.7 SUBMITTALS

A. Comply with provisions of Section 013300, Submittal Procedures.

B. Product Data: Provide manufacturer’s data sheets for each mirror product and material.

C. Samples: Provide 12-inch-square for each type of mirror product.

D. Provide Shop Drawings.

E. Mirror Schedule: Prepare schedule using designations used on Drawings.

F. Product Certificates: Signed by manufacturers/fabricators of mirror products certifying that products furnished comply with project requirements.

G. Preconstruction Adhesion and Compatibility Test Report: From mirror sealant manufacturer, based on submitted samples or acceptable data from previous testing of current formulations with similar products.

H. Qualification Information: For Installer firm and Installer’s manufacturer/fabricator-trained field supervisor.

I. Warranties: Submit sample meeting warranty requirements of this Section.

1.8 QUALITY ASSURANCE

A. Manufacturer/Source: Obtain each type of mirror product from a single primary glass manufacturer and a single manufacturer/fabricator for each glass product type.

B. Installer Qualifications: Experienced Installer with minimum of 5 successful completed projects of similar materials and scope, approved by glass product manufacturer/fabricator.

C. Glazing Industry Publications: Comply with glass product manufacturer’s recommendations and the following:

1. GANA Publications: GANA Laminated Division's "Laminated Glass Design Guide" and GANA's "Glazing Manual" and "Mirrors, Handle with Extreme Care: Tips for the Professional on the Care and Handling of Mirrors."

D. Safety Glazing Products: For film-backed tempered mirrors, provide products complying with testing requirements in 16 CFR 1201 for Category II materials.

1.9 DELIVERY, STORAGE, AND HANDLING

A. Protect mirrors during shipping, handling, and storage to prevent breakage, scratching, or other visible damage including damage from moisture, condensation, temperature changes, direct exposure to sun or other causes.

B. Comply with manufacturer's written instructions for shipping, storing and handling mirrors as needed to prevent deterioration of silvering, damage to edges and abrasion of glass surfaces and applied coatings.

C. Deliver, unload, store, and erect mirrors without exposing panels to damage from construction operations.

1.10 WARRANTY

A. Warranty for Mirror Products: Manufacturer's standard form, signed by mirror product primary manufacturer or manufacturer/fabricator, as applicable, agreeing to replace mirrors that display peeling, cracking, and other deterioration including discoloration, black spots and clouding of silver film normal use, within ten (10) years of date of Substantial Completion.

D. Installer's Warranty: Form acceptable to City, signed by mirror Installer, agreeing to replace mirrors that deteriorate, or that exhibit damage or deterioration of glass or glazing products due to faulty installation, within two (2) years of date of Substantial Completion.

**2.0 PRODUCTS**

2.1 MATERIALS

A. Silvered Flat Glass Mirrors

1. General Glass Mirrors: ASTM C 1503; manufactured using copper-free, low-lead mirror coating.

2. Tempered Clear Glass: Mirror Glazing quality, for blemish requirements; and comply with ASTM C 1048 for Kind FT, Condition A, tempered float glass before silver coating is applied.

a. Nominal Thickness: 6.0 mm

3. C.R. Laurence Co., Inc CRL Black 1/16" x 1/2" All-Purpose Foam Mirror Mounting Tape # CRL421612

a. Adhesion: 1.875 lbs./inch

b. Shear Strength: 10,000+ minutes

B. Mirror Accessories:

1. Setting Blocks: ASTM C864, neoprene, 80 to 90 Shore A durometer hardness; length 4 inches, width of glazing rabbet space less 1/16 inch, height required for glazing method, pane weight, and pane area.

2. Edge Sealer: Coating compatible with glass coating and approved by mirror manufacturer for use in protecting against silver deterioration at mirrored glass edges.

3. Mirror Mastic: An adhesive setting compound, asbestos-free, produced specifically for setting mirrors and certified by both mirror manufacturer and mastic manufacturer as compatible with glass coating and substrates on which mirrors will be installed.

1. Adhesive shall have a VOC content of not more than 70 g/L when calculated according to 40 CFR 59, Subpart D (EPA Method 24).

a. Follow more stringent local, regional, state and federal requirements where applicable.

4. Film Backing for Safety Mirrors: Film backing and pressure-sensitive adhesives; both compatible with mirror backing paint as certified by mirror manufacturer.

C. Mirror Hardware

1. Mirror Bottom Clips: CRL Standard Aluminum J-Channel

a. Manufacturer: C.R. Laurence Company

b. Size: ¼” J-Channel

c. Finish: To be selected by Architect

2. Mirror Top Clips: CRL Deep Nose Aluminum J-Channel

a. Manufacturer: C.R. Laurence Company

b. Size: ¼" J-Channel

c. Finish: To be selected by Architect

3. Fasteners: Fabricated of same basic metal and alloy as fastened metal and matching it in finished color and texture where fasteners are exposed.

4. Anchors and Inserts: Provide devices as required for minor hardware installation. provide toothed or lead-shield expansion-bolt devices for drilled-in-place anchors. Provide galvanized anchors and inserts for applications on inside of exterior walls and where indicated.

2.3 FABRICATION OF MIRRORS

A. General: Fabricate mirrors in dimensions required, with edge and face clearances, edge and surface conditions, and bite in accordance with mirror manufacturer/fabricator's instructions and referenced glazing publications.

**3.0 EXECUTION**

3.1 EXAMINATION OF SURFACE CONDITIONS

A. Prior to work of this Section, carefully inspect the installed work of other trades and verify that all such work is complete to the point where the work of this Section may properly commence.

1. Verify that glazing may be performed in strict accordance with all pertinent codes and regulations, the original design, and the referenced standards.

B. Verify that glazing channels are clean and ready to accept glazing installation, and that weeps are unobstructed. Confirm that minimum required face and edge clearances will be maintained.

C. Examine glazing units prior to setting. Reject units that display edge or face damage that may impede performance of unit or that will be visible when installed. Installer to ensure reflected image from mirror to mirror have a consistent reflection. To unsure this installer is to stand 20' away from a seam between 2 mirrors and confirm the reflection of his face matches.

D. In the event of discrepancy, immediately notify the City. Do not proceed with glazing in areas of discrepancy until all such discrepancies and unsatisfactory conditions have been fully resolved and corrected.

3.2 PREPARATION

A. Clean glazing channels with recommended solvent and wipe dry. Apply primers to joint surfaces to ensure adhesion of sealants, unless preconstruction sealant-substrate testing indicates no primer is required.

## 3.3 GLAZING INSTALLATION

A. General: Install glass and glazing materials in accordance with instructions of manufacturers and requirements of GANA Glazing Manual.

1. Set glazing material in a true plane, tight and straight, allowing for expansion in accordance with manufacturer's published recommendations, using compression gaskets, glazing, tape and sealant in accordance with manufacturer's recommendations.

2. Install setting blocks of size and in location required by mirror manufacturer. Set blocks in bed of approved sealant.

3. Provide spacers for mirror sections as recommended, based upon size of mirror unit.

4. Comply with mirror manufacturer’s limits on edge pressures.

5. Provide edge blocking where recommended.

6. Install sealants in accordance with requirements of Section 079000, Joint Protection: Sealants and Caulking.

B. Mastic Installation: Comply with mastic manufacturer’s installation directions for preparation of mounting surface including coating with mastic manufacturer’s special bond coating where applicable.

1. Apply mastic in spots to comply with mastic manufacturer's directions for coverage and to allow air circulation between back of mirror and mounting surface.

C. Hardware Installation:

1. Provide permanent means of structural support at bottom edge of mirror.

2. Attached mirror hardware securely to mounting surface with mechanical fasteners with anchors or inserts.

3. Place a felt or plastic pad between mirror and metal or plastic clips to prevent spalling of mirror edges.

D. Mirror Installation:

1. After mastic is applied, align mirror and press into place while at the same time maintaining a minimum air space of 4 mm for air circulation between back of mirror and mounting surface.

2. Install clips along top of mirror during mastic curing period.

3.4 CLEANING AND PROTECTION

A. Protect installed mirrors from damage. Attach streamers or warning tape to framing members, away from contact with glass. Remove nonpermanent labels.

B. Protect glass from contact with contaminating substances during construction. Immediately clean glass exposed to contamination using methods as recommended by mirror manufacturer.

C. Within 5 working days prior to inspection for Substantial Completion, clean all exposed glass surfaces using methods recommended by manufacturer. Remove glazing compounds from framing surfaces.

1. Clean with a mild soap or detergent and lukewarm water, using a clean sponge or soft cloth. Rinse well with clean water. Do not use abrasive or highly alkaline cleaner, razor blades, benzene, acetone, gasoline or carbon tetrachloride. Avoid cleaning during times when surface is exposed to hot direct sun.

D. Remove and replace broken or damaged glass *at no cost to the City*.

**END OF SECTION**

# Division 9:
# Finishes

# SECTION 092236 - LATH

## 1.0 GENERAL

### 1.1 SUMMARY

A. This section includes all labor, materials, equipment, operations or methods listed, mentioned or scheduled on the plans and/or herein specified, including all incidentals necessary and required for completion of work under this Section.

### 1.2 RELATED SECTIONS

A. Documents affecting work of this section include, but are not necessarily limited to, General Conditions, Special Conditions and Division 1 of these Contract Documents.

B. Section 092423 – Portland Cement Stucco

### 1.3 REFERENCES

A. American Society for Testing Materials (ASTM):

1. ASTM C847 – Standard specification for metal lath
2. ASTM C933 – Welded Wire Lath
3. ASTM C1063 – Standard Specification for Installation of lathing and Furring to receive Interior and Exterior Portland Cement Based Stucco

B. California Building Code (CBC) Chapters 7, 14 and 25

C. Federal Specification UU-B-790A: Building Paper, Vegetable Fiber

D. Metal Lath/Steel Framing Association (ML/SFA) – Specifications for Metal Lathing and Furring

### 1.5 SUBMITTALS

A. Submittals, procedures and quantities are specified in Section 013300.

B. Shop Drawings: Submit shop drawings of all accessory conditions showing exact relationships and methods for splicing and providing for expansion and methods of sealing, especially of intersections.

C. Product Data: Submit manufacturer's data on furring and lathing components, structural characteristics, material limitations and finish. Include other data as required to show compliance with these specifications.

1.6 QUALITY ASSURANCE

A. Provide sufficient skilled workers and supervisors who shall be present at all times during the execution of this portion of the Work and who shall be thoroughly familiar with the type of work involved and the materials and techniques specified.

B. Comply with governing codes and regulations.

1.7 PRODUCT HANDLING

A. Delivery: Deliver all lathing materials in their original containers with labels intact and legible.

B. Protection:

1. Store all materials and equipment for this portion of the Work only in the area designated for that purpose.

2. Do not allow the scattering of materials or equipment but use all means necessary to ensure neatness of the site at all times.

3. Perform all cleaning of equipment and tools only in the area designated for that purpose.

4. Use all means necessary to protect all materials before, during and after installation and to protect the installed work and materials of other trades.

5. In the event of damage, immediately make all repairs and replacements necessary to the approval of the Architect and at no additional cost to the City.

**2.0 PRODUCTS**

2.1 MANUFACTURER

A. Western Metal Lath and Steel Framing Products, Keene, Cemco, Superior, Fry as specified or as appropriate.

2.2 MATERIALS

A. BUILDING PAPER / PLASTIC SHEET FLASHING MATERIAL

1. Weather resistant barrier/building paper: Federal Spec. UU-B-790A, Type I, Grade D, Style 2 water vapor permeable 60 minute water resistance rating when tested in accordance with ASTM D779. Note: 15-pound felt is not acceptable.

a. Fortifiber “60 Minute Super Jumbo Tex”, or approved equal.

2. Plastic Sheet Flashing/Self-adhering Membrane (SAM): Self sealing SBS modified asphalt core laminated to cross laminated high density polyethylene film reinforcement, minimum 40 mil thick, self adhesive.

a. Fortifiber “Fortiflash”, widths as required.

1) Sealant: Apply sealant type approved by plastic sheet flashing manufacturer.

2) Primer: Apply primer type approved by plastic sheet flashing manufacturer.

b. Protecto Wrap “Jiffy Seal 140/60”, widths as required.

1) Sealant: Apply sealant type approved by plastic sheet flashing manufacturer.

2) Primers: Horizontal #80; vertical #100; types approved by plastic sheet flashing manufacturer.

B. METAL LATH

1. Metal Lath for Vertical Locations: ASTM C933; galvanized; 15 gauge minimum; self-furred welded wire lath.

   a. Paper-backed lath is not permitted.

2. Strip Lath: ASTM C847; galvanized; flat diamond mesh lath, minimum 2.5 lbs per square yard, 4 inch unless otherwise shown.

3. Anchorage; Corrosion resistant tie wire, nails, screws and other metal supports, of type and size to suit application and as required by the California Building Code; to rigidly secure materials in place.

C. ACCESSORIES

1. Unless otherwise noted, Cemco, Superior, Keene, Fry or approved equal. Provide longest possible lengths.

2. Casing Beads: 26 gauge galvanized steel, zinc alloy acceptable. Expanded metal flanges square edges. Depth to match plaster thickness. Cemco #66; Keene #66X; or equal. Galvanized steel or zinc alloy acceptable, unless otherwise noted.

3. Corner Reinforcement:

   a. Expanded flange, small nose; welded or woven copper-bearing steel wire of minimum 18 gauge. Minimum 2” flanges. Cemco #2A; Keen 1-X or equal.

4. Expansion Joints: Solid flange, adjustable. Keene #40; Superior SSJ or equal.

5. Control Joints: V-shape with expanded flange. Keene #15; Cemco "Double V" or equal.

6. Drip Screeds and Weep Screeds: 26 gauge galvanized steel, profile(s) as sown, without flange drainage holes.

7. Reveals:

   a. Backing Plate: Sheet steel, 24 gauge, galvanized; width as required for full bearing of reveal.

8. Fasteners: ASTM C1002, self drilling, self tapping screws; galvanized.

9. Shot pin with large washer for bead and joint flanges over concrete masonry units; Hilti DNI 32 P8536.

10. Sealant: As specified in Section 079000 – Sealants and Caulking.

    a. For plastic sheet flashing products, use compatible sealant approved by plastic sheet flashing manufacturer.

## 3.0 EXECUTION

### 3.1 SURFACE CONDITIONS

A. Inspection:

1. Prior to all Work of this Section, carefully inspect the installed work of other trades and verify that all such work is complete to the point where this installation may properly commence.

B. Correction:

1. In the event of discrepancy, immediately notify the Architect.

2. Do not proceed with work in other areas of discrepancy until all such discrepancies have been resolved.

### 3.3 WEATHER RESISTANT BARRIER/BUILDING PAPER

A. Over all elements of the construction which are to receive plaster, apply building paper with the long dimension at right angle to supports, starting at the wall edge and lapping all upper courses over lower courses at least 3 inches at side joints, and at least 6 inches at end joints. Apply just ahead of the lath and stretch firmly. Secure at joints with 8-ML screws through gypsum sheathing to metal studs.

B. Do not damage barrier/paper; repair any punctures and/or tears with plastic cement and additional pieces of barrier/paper if required. Lap carefully at all openings, flashings, and other installed barrier/paper. At drip screeds and top flange of

horizontal expansion joints, lap barrier/paper over flange. At openings apply plastic sheet flashing around openings and “shingle” into barrier/paper.

C. Schedule application to avoid prolonged exposure of barrier/paper to sun or inclement weather.

3.4 PLASTIC SHEET FLASHING / SELF-ADHERING MEMBRANE (SAM)

A. Apply at wall penetrations such as openings, and at expansion joints.

1. Flash penetrations with a strip 9 inches minimum in width, applied weatherboard fashion as shown all around opening.

2. Coordinate with installation of frames.

B. Apply at corners, and at other transitions as shown.

C. At parapet walls, install self-adhering membrane on both faces of wall, carry to tope of wall and install continuous self-adhering membrane strip turned 2 inches minimum over edge as shown at top of parapet. Lap any required joints 4 inches minimum and seal as recommended by manufacturer. DO NOT USE FASTENERS OF ANY KIND IN HORIZONTAL PLASTERED OR HORIZONTALLY INCLINED SURFACES.

3.5 APPLICATION OF ACCESSORIES

A. Apply accessories at all edges of plaster work, changes in plane, exterior corners and interior corners and elsewhere as

B. Apply accessories at control joints and expansion joints shall be placed as shown, or where not shown, as directed at intervals not to exceed 12 feet in any direction.

C. Set with tolerance of 1/8” in 10’-0” for plumb or level, shim as required.

D. Fasten accessories securely with galvanized fasteners to metal lath. Use 18 gauge, minimum, wire tie 8 inch on center maximum spacing. Do not use any fastener on horizontal surface which would penetrate the weather resistant barrier or sheet flashing.

E. Provide isolation of aluminum accessories from metal lath or other ferrous material.

F. Cut all accessories square and clean. Miter or cope at corners. Use full length except where stock lengths are exceeded.

G. Where exterior accessories intersect, run vertical through and butt the horizontal. Bed all members in sealant.

H. Carefully align joints, use shims if necessary, and secure accessories into position. Verify that lath is discontinuous behind control and expansion joints.

I. Wire corner reinforcement for cement stucco is to be set as screed for brown coat and embedded 1/8” in finish.

J. Weep Screeds: Screw to framing before installation of weather resistant barrier. Carry weather resistant barrier/building paper down over flange of week screeds.

K. Expansion Joints: Terminate lath on each side of joint. Do not bridge joints with lath. Set expansion joints over 6” wide strip of plastic sheet flashing.

L. Control Joints: Run lath behind control joints.

M. Apply sealant at all splices, intersections and terminations of both control and expansion joints.

N. Place reveal screeds rigidly in place.

O. Accessories that do not have expanded metal flanges shall have a continuous 4” wide strip of lath placed over the metal flanges in order to key in the stucco.

3.6 LATHING

A. Apply lath in conformance with ASTM C1063.

B. apply metal lath taut, with long dimension perpendicular to supports.

C. Lap ends minimum 1”. Secure end laps with tie wire where they occur between supports.

D. Lap sides of welded wire lath minimum 2 inches.

E. Attach lath to supports in accordance with standard requirements for kinds of supports shown, not to exceed 6” on center spacing between attachments.

F. Where lath abuts load bearing walls or partitions, structural columns, or structural decks or ceilings, terminate lath to allow for casing bead isolation joint between plaster and abutting surface.

G. Internal angles to be continuously reinforced with corner mesh, except where the metal lath returns 3” from corner to form the angle reinforcement; fasten at perimeter edges only.

H. Cut and butt lath at external corners as preparation for corner bead or wire corner reinforcement. Place corner bead; fasten at outer edges of lath only.

I. Where lath is to be cut, ensure that sufficient width of cut is maintained for size and to allow wire to cover wings.

J. Place 4” wide strips of metal lath centered over junctions of dissimilar backing materials. Secure rigidly in place.

K. Place 4”W x 12”L strips of metal lath diagonally at corners of all openings. Secure rigidly in place.

L. Place casing beads at terminations of plaster finish. Butt and align ends. Secure rigidly in place.

M. Patch and seal all tears and/or punctures in weather resistant barrier/building paper backing in an approved manner just before application of stucco scratch coat.

N. After installation of self furring lath, verify that lath is ¼” clear of paper as required code. Pull lath back as required to obtain proper clearance.

3.7 TOLERANCES

A. Maximum Variation from True Lines & levels: 1/8” in 10’.

B. Maximum Variation from True Position: 1/8”.

3.8 WARRANTY

A. Manufacturer’s standard performance warranty, as available for specified installation and environmental conditions.

**END OF SECTION**

# SECTION 092423 - PORTLAND CEMENT STUCCO

## 1.0 GENERAL

### 1.1 SUMMARY

A. This section includes all labor, materials, equipment, operations or methods listed, mentioned or scheduled on the plans and/or herein specified, including all incidentals necessary and required for completion of work under this Section.

### 1.2 RELATED SECTIONS

A. Documents affecting work of this section include, but are not necessarily limited to, General Conditions, Special Conditions and Division 1 of these Contract Documents.

B. Section 079000, Sealants and Caulking

C. Section 092236, Lath

D. Section 076000, Flashing and Sheet Metal

E. Section 099100, Painting

### 1.3 REFERENCES

A. American Society for Testing Materials (ASTM):

1. ASTM C144 - 04 Standard Specification for Aggregate for Masonry Mortar.

2. ASTM C150 – Portland Cement

3. ASTM C206 - 03 Standard Specification for Finishing Hydrated Lime.

### 1.5 SUBMITTALS

A. Submittals, procedures and quantities are specified in Section 013300.

B. Product Data: Submit manufacturer's data for materials, characteristics and limitations of products specified, including accessories.

### 1.6 QUALITY ASSURANCE

A. Provide sufficient skilled workers and supervisors who shall be present at all times during the execution of this portion of the Work and who shall be thoroughly familiar with the type of work involved and the materials and techniques specified.

B. Comply with governing codes and regulations.

C. Deliver, handle and store materials in accordance with their manufacturer's instructions.

1.7 PRODUCT HANDLING

A. Delivery: Deliver all plastering materials in their original containers with labels intact and legible.

B. Protection:

1. Store all materials and equipment for this portion of the Work only in the area designated for that purpose.

2. Do not allow the scattering of materials or equipment but use all means necessary to ensure neatness of the site at all times.

3. Perform all cleaning of equipment and tools only in the area designated for that purpose.

4. Use all means necessary to protect all materials before, during and after installation and to protect the installed work and materials of other trades.

5. In the event of damage, immediately make all repairs and replacements necessary to the approval of the Architect and at no additional cost to the City.

1.8 MOCK UP

A. Construct mock up, 4' x 4', illustrating surface finish.

B. Locate where directed by Architect; approved mock up shall remain until completion of installation, and shall serve as a standard of quality for the installation.

1.9 ENVIRONMENTAL REQUIREMENTS

A. Do not apply cement stucco when ambient temperature is less than 40 degrees F.

B. Protect plaster from uneven drying.

**2.0 PRODUCTS**

2.1 PORTLAND CEMENT STUCCO COMPONENTS:

A. STUCCO BASE MATERIALS:

1. CEMENT: Kaiser Premium All Purpose Plastering Cement, with Gibco "PRF" admixture (no know equal with ICBO approval)

2. LIME: Omit lime when PRF admixture with Kaiser All Purpose Plastering Cement is used.

3. AGGREGATE: All aggregate shall be clean and well graded, conforming with ASTM C897.

4. WATER: All water shall be clean, fresh, potable and free of mineral and/or organic matter which can affect stucco.

5. BONDING AGENT: Contractor shall mix according to manufacturer's instructions. Use Thoro Systems Thorobond or approved equal.

B. STUCCO FINISH MATERIALS:

1. 20 mesh top sand.
2. Prime and paint per section 099100 Painting

C. STUCCO ACCESSORIES

1. Fry Reglet channel screed/control joint

a. ¾" x 2" model# PCS-75-200

b. ¾" X 6" Model # PCS-75-600

## 3.0 EXECUTION

### 3.1 SURFACE CONDITIONS

A. Inspection:

1. Prior to all Work of this Section, carefully inspect the installed work of other trades and verify that all such work is complete to the point where this installation may properly commence.

2. Verify that lath is flat, secured to substrate, and joint and surface perimeter accessories are in place.

3. Verify that finished plaster surfaces may be applied in a strict accordance with all pertinent regulations and the requirements of these Specifications.

B. Correction:

1. In the event of discrepancy, immediately notify the Architect.

2. Do not proceed with work in other areas of discrepancy until all such discrepancies have been resolved.

3.2 WEATHER CONDITIONS

A. Do not apply plaster when prevailing outdoor temperature is below 40 degrees F. If freezing is expected, do not apply plaster beyond the period required for proper hydration.

3.3 PLASTERING: GENERAL REQUIREMENTS

A. Mix the plaster for each coat in careful conformance with the "Referenced Standards." The mock up is to be used as a standard of quality for plaster texture.

B. Arrange scaffolding and coordinate work so that full height of vertical surfaces is done in singe, uniformly wet application. Walls which show horizontal patterns because of unequal application, material or curing shall be redone.

C. Use natural breaking points, such as changes in planes, for overnight joining. Each coat of plaster for an entire surface from top to bottom and between natural breaking points shall be applied in one day. Segments of work bounded by expansion joints or corner beads shall not show laps or joinings.

D. When permanent grounds are too far apart to serve as guides for rodding, provide plaster screeds and establish true surface of screeds with rod before screeds are set.

E. Finish plaster in a true, plumb or level plane with grounds. Keep grounds clean and free of plaster.

3.4 PLASTERING – OVER FRAMED CONSTRUCTION

A. Apply scratch coat, lightly scratched horizontally only, to a nominal thickness of 3/8”, brown coat to a nominal thickness of 3/8”, and a finish coat to a nominal thickness of 1/8” over metal lathed surfaces. Brown coat shall be rodded with a light alloy straight edge (not darbied or rodded with a serrated tool). Maximum variation in surface plane for brown coat ¼” in any direction under an eight-foot straight edge.

B. Determine the most effective procedure of curing and time lapse between application of coats, based on weather, job conditions, product manufacturer’s recommendations, code requirements, and placement of control joints. As a minimum, comply with the following:

1. Continuously moist cure scratch coat for a minimum of 48 hours.

2. Allow a minimum of 48 hours before applying brown coat.

3. Continuously moist cure brown coat for a minimum of 48 hours.

4. Allow a minimum of 14 days cure time after application of brown coat before applying finish coat.

5. Alternate Method for applying base coat: apply scratch coat and follow up with the brown coat as soon as the scratch is sufficiently rigid to resist damage.

C. After curing, dampen (fog spray) base coat prior to applying finish coat.

D. Finish coat texture to match approved mock up.

3.5 ERECTION TOLERANCES

A. Maximum variation from Flat Surface: 1/8” in 10’

3.5 PROTECTION OF ADJACENT SURFACES

A. Take particular care during the portion of the Work to prevent damage to the installed work of the other trades.

B. Protect by masking: aluminum frames, window glazing and thresholds from being scratched, dented, and filled with plaster.

C. Upon completion of this portion of the Work, and as a condition of its final acceptance, carefully inspect all surfaces surrounding the plaster and remove all traces of plaster splatter.

D. Repair or replace any surfaces stained, marred or otherwise damaged. Remove or replace any surface which cannot be properly cleaned.

E. Plaster defects, including but not necessarily limited to excessively cracked or crazed, non uniform texture and surfaces not meeting specified tolerances: Remove and replace unacceptable plaster, including plaster base materials if damaged during removal of defective plaster.

3.6 WARRANTY

A. Manufacturer’s standard performance warranty, as available for specified installation and environmental conditions.

**END OF SECTION**

# SECTION 092900 – GYPSUM BOARD

## 1.0 GENERAL

### 1.1 SUMMARY

A. This Section includes all labor, materials, equipment, operations, or methods listed, mentioned or scheduled on the plans and/or herein specified, including all incidentals necessary and required for completion of work under this Section.

B. Section Includes:

1. Provision of gypsum board screw attached to wood framing and furring members, joint treatment and accessories.

2. Provision of silicone impregnated gypsum board.

3. Installation of sound deadening insulation in walls and ceilings and including acoustical sealant, tape and the like for work of this Section.

C. Products Installed but not Furnished under this Section

1. Sound deadening insulation as specified in Section 072116.

2. Acoustical sealant as specified in Section 079000.

### 1.2 RELATED SECTIONS

A. Documents affecting work of this Section include, but are not necessarily limited to, General Conditions, Special Conditions and Division 1 of these Contract Documents.

B. Section 054000 - Cold-Formed Metal Framing: Provision of metal framing.

C. Section 054500 - Metal Support Assemblies: Provision of metal framing.

D. Section 079000 - Sealants and Caulking: Provision of caulk.

E. Section 099100 - Painting: For finish painting.

### 1.3 REFERENCES

A. ASTM - American Society for Testing and Materials

1. C36 - Standard Specification for Gypsum Wallboard.

2. C79 - Test Method for Gypsum Sheathing Board.

3. C475 - Standard Specification for Joint Treatment materials for gypsum Wallboard Construction.

4. C630 - Standard Specification for Water-Resistant Gypsum Backing Board.

5. C840 - Standard Specification for Application and Finishing of Gypsum Board.

6. C954 - Standard Specification for Steel Drill Screws for the Application of Gypsum Board or Metal Plaster Bases to Steel Studs from 0.33 in. (0.84 mm) to 0.112 in. (2.84 mm) in Thickness.

7. C1002 - Standard Specification for Steel Drill Screws for the Application of Gypsum Board or Metal Plaster Bases,

8. C1047 - Standard Specification for Accessories for Gypsum Wallboard andbGypsum Veneer Base.

9. D226 - Standard Specification for Asphalt-Saturated Organic Felt Used in Roofing and Waterproofing.

10. E119 - Method for Fire Tests of Building Construction and Materials.

11. E136 - Standard Test Method for Behavior of Materials in a Vertical Tube Furnace at 750 Degrees C.

B. CBC - California Building Code, 2016 Edition

C. GA - Gypsum Association

1. 216 - Application and Finishing of Gypsum Board.

D. UL - Underwriters Laboratories, Inc.

1.4 SYSTEM DESCRIPTION

A. Design Requirements: Where indicated, provide materials and construction which are identical to those assemblies whose fire resistance rating has been determined in accordance with ASTM E119 by a testing and inspecting organization acceptable to authorities having jurisdiction.

B.

## 1.5 SUBMITTALS

A. Product Data: Submit manufacturer's product data. Include the following:

1. Fire Resistance Data: Include required fire test results for gypsum board systems on partitions, ceilings and columns. Correlate with supporting steel framing details.

2. Sound Transmission Data: Include certified evidence that installed gypsum board systems and materials meet required STC levels.

## 1.6 QUALITY ASSURANCE

A. Fire Test Response Characteristics: Where fire resistance rated gypsum board assemblies are indicated, provide gypsum board assemblies that comply with the following requirements:

1. Fire Resistance Ratings: As indicated by GA File Numbers in GA-600 "Fire Resistance Design Manual" or design designations in UL "Fire Resistance Directory" or in the listing of another testing and inspecting agency acceptable to authorities having jurisdiction.

2. Gypsum board assemblies indicated are identical to assemblies tested for fire resistance according to ASTM E119 by an independent testing and inspecting agency acceptable to authorities having jurisdiction.

3. Deflection and Firestop Track: Top runner provided in fire resistance rated assemblies indicated is labeled and listed by UL, Intertek Testing Agency, or another testing and inspecting agency acceptable to authorities having jurisdiction.

## 1.7 DELIVERY, STORAGE, AND HANDLING

A. Acceptance at Site: Deliver materials in original packages, containers or bundles bearing brand name and identification of manufacturer or supplier. Verify board and accessories as undamaged.

B. Storage and Protection

1. Store materials inside under cover and keep dry and protected against damage from weather, direct sunlight, surface contamination, corrosion, construction traffic and other causes. Neatly stack gypsum boards flat to prevent sagging.

2. Handle gypsum boards to prevent damage to edges, ends and surfaces.

1.8 PROJECT CONDITIONS

A. Environmental Conditions

1. Establish and maintain environmental conditions for application and finish gypsum board to comply with ASTM C840 and with gypsum board manufacturer's recommendations. Maintain not less than 40 degrees Fahrenheit minimum room temperature.

2. Ventilate building spaces to remove water not required for drying joint treatment materials. Avoid drafts during day, hot weather to prevent materials from drying too rapidly.

**2.0 PRODUCTS**

2.1 MANUFACTURERS

A. Acceptable Manufacturers: United States Gypsum Co.; Gold Bond Building Products Div., National Gypsum Co.; Pacific Coast Building Products, Pabco Gypsum Division, or equal.

2.2 MATERIALS

A. USG sheetrock® brand mold tough® VHI Firecode® X Panels, ASTM C1629

a. Thickness 5/8 in.

b. 48 in. wide x 8 ft.-12 ft.

c. Weight 2.8 lbs./sq. ft.

d. Edges Tapered

e. Installed up to 8’ in rooms 100F, 127, &128

B. USG sheetrock® brand Ecosmart Panels Firecode® X, ASTM C1396

a. Thickness 5/8 in.

b. Lengths 8-16 ft. x Width 4 ft.

c. Weight 1.8 lb./sq. ft.

d. Edges Tapered

C. Fasteners

1. Screws: ASTM C1002, Type “S" steel drill screws for fastening gypsum board to gypsum board, and steel framing members less than 0.033-inch thick. ASTM C954 Type “S-12" steel drill screws for fastening gypsum board to steel framing members 0.033 to 0.112-inch thick.

D. Insulation: As specified in Section 072116.

E. Accessories

1. Comer Beads and Casing Beads: ASTM C1047, sheet steel zinc coated by hot-dip process. Flanges shall be free of dirt, grease and other materials that may adversely affect bond of joint treatment.

2. Reveal Picture Hanger Where indicated on drawings provide Fry Reglet Reveal/Picture Hanger as manufactured by Fry Reglet Corporation. Extruded aluminum shall be 6063 T5 alloy with chemical conversion coating. Provide a total of 24 hanger clips for use with the picture hanger rail.

3. Reveal Base: Where indicated on drawings, provide extruded aluminum base with a reveal depth of 5/8-inch and a reveal width of 8 inches.

F. Joint Treatment Materials: Products of one manufacturer conforming to ASTM C475, ASTM C840 and recommendations of manufacturer of both gypsum board and joint treatment materials for application indicated. Conform to GA 201 and GA 216 for reinforcing tape, joint compound and water.

1. Joint Tape

a. Cross-laminated, tapered edge, reinforced paper or fiber glass mesh tape as recommended by setting type joint compound manufacturer.

b. Fiberglass mesh tape for use with gypsum sheathing board with water-resistant core.

2. Setting Type Joint Compound: Factory prepackaged, job mixed, chemical hardening powder products formulated for uses indicated or factory premixed product.

G. Acoustical Sealant: As specified in Section 079000.

2.3 FINISHES

A. Levels of Gypsum Board Finish Per room (as Defined by GA)

1. Level 2 – Rooms 127 & 128

a. Water-Resistant Gypsum Board Substrate for Ceramic Tile and Where Indicated: All joints and interior angles shall have tape embedded in joint compound and 1 separate coat of joint compound applied over all joints, angles, fastener heads, and accessories. Surface shall be free of excess joint compound. Tool marks and ridges are acceptable.

2. Level 5- Room 100F

a. All other areas: All joints and interior angles shall have tape embedded in joint compound and 3 separate coats of joint compound applied over all joints, angles, fastener heads and accessories. A thin skim coat of joint compound or a material manufactured especially for this purpose, shall be applied to entire surface. Surface shall be smooth and free of tool marks and ridges.

**3.0 EXECUTION**

3.1 EXAMINATION

A. Examine areas and surfaces to receive gypsum board and verify the following:

1. Proper alignment and spacing of backing and framing support systems.

2. Complete installation of mechanical, electrical or other items to be enclosed in partitions that cannot be installed after installation of board.

3.2 PREPARATION

A. Protect surrounding areas and surfaces to preclude damage.

1. Exercise care to avoid soiling, spatter and damage to work of other trades.

2. Use cover clots or other means of protection. Remove, clean and repair any soiled or damaged work as required.

3. Protect from damage at all times.

## 3.3 INSTALLATION

A. Gypsum Board

1. Install and finish gypsum board to comply with ASTM C840 or GA 216.

   a. Single Layer; Install in accordance with ASTM C840, except as amended or required by specific fire resistive or sound isolation system detailed. In that instance, application shall conform to requirements of the manufacturer's tests as reviewed and accepted in the submittal.

   b. Double Layer: Conform to applicable portions of ASTM C840, System Classification VIII for installations applied with screws. Conform to required fire resistance standards.

2. Apply in vertical direction with ends and edges falling on supports. In vertical applications, gypsum board shall be of length required to reach full height of vertical surfaces in one continuous piece.

3. Position boards so that like edges abut, tapered edges against tapered edges and field cut ends against field cut ends. Do not place tapered edges against cut edges or ends. Stagger vertical joints over different studs on opposite sides of partitions.

4. Start installation of panels at exterior wall to position butt joints as far away from exterior wall as possible.

B. Fire Resistant Assemblies*. Wherever fire rated gypsum board construction is indicated, provide materials and installation methods, including types and spacing of fasteners, in accordance with CBC. Apply firestopping at top of wall and at penetrations through fire resistant assembly in accordance with Section 078400.

C. Sound Retardant Installations

1. Follow manufacturer's directions and specifications for conditions of installation. Install where indicated. Include around all Toilet Rooms, whether indicated or not. Install from floor surface to bottom side of next floor surface.

   a. Wrap with insulation and seal electrical or other outlets in sound isolating partitions.

   b. Install sealant to completely fill void between gypsum board edges and adjacent surface.

D. Wet Locations

1. At Walls and Ceilings: Conform to ASTM C840, System Classification X.

2. Treat cut edges and holes in water resistant gypsum board with sealant

E. Fastenings: Attach gypsum board to framing with screws, lengths and sizes as recommended by manufacturer and in accordance with CBC.

F. Access Doors: Install gypsum board into access door frames specified in Section 083113 where required and where indicated on the Drawings. Anchor firmly into position, and align properly to achieve an installation flush with adjacent finished surfaces.

G. Accessories

1. Install comer beads at vertical and horizontal external comers.

2. Install casing beads whenever edge of gypsum board would otherwise be exposed or semi-exposed, or where abutting dissimilar materials.

3. After accessories are installed, correct surface damage and defects.

4. Install trims and expansion joints where required.

H. Allowable Tolerances

1. Offset Between Planes of Board Faces: 1/16-inch.

2. Plane, Level, Warp and Bow: 1/8-inch in 8 feet-0 inches.

3. Shim panels as necessary to comply with tolerances.

3.4 FINISHING OF GYPSUM BOARD

A. Apply joint treatment at gypsum board joints; flanges of corner bead, edge trim and penetrations, fastener heads and surface defects in accordance with ASTM C840 or GA 216. Number of coats of treatment shall be as specified above.

B. Apply joint tape at joints between gypsum boards.

C. Finish interior gypsum board by applying the number of coats of treatment as specified above. Sand between coats and after last coat.

D. Finish Painting: As specified in Section 099100.

E. Caulking

1. Caulk openings around pipes, fixtures and other items projecting through gypsum board as specified in Section 079000.

2. Caulk top of fire rated walls and partitions and penetrations through fire rated walls and partitions in accordance with Section 078400.

3. Apply caulking material with exposed surface flush with gypsum board.

3.5 FIELD QUALITY CONTROL

A. Installer shall be present at the Architect's inspection of Work. Touch up as required and directed subsequent to finish application.

3.6 CLEAN UP

A. Clean all beads, screeds, metal base, metal trim, mechanical and electrical items.

1. Wipe clean, leaving work ready for finish specified under other Sections.

2. As work is completed in each space, clean all rubbish, utensils and surplus materials from the space. Leave floors broom clean.

3.7 PROTECTION

A. Provide protection to gypsum board construction from damage or deterioration.

**END OF SECTION**

# SECTION 095100 – ACOUSTICAL WALL PANELS

## 1.0 GENERAL

### 1.1 SUMMARY

A. This Section includes all labor, materials, equipment, operations, or methods listed, mentioned or scheduled on the plans and/or herein specified, including all incidentals necessary and required for completion of work under this Section.

B. Section includes: Cementitious wood fiber plank acoustical wall panel system

### 1.2 RELATED SECTIONS

A. Section 099100, Painting

B. Section 092900, Gypsum Board

### 1.3 REFERENCES

A. ASTM International:

1. ASTM C635 Standard Specification for the Manufacture, Performance, and

2. ASTM E84 Standard Test Method for Surface Burning Characteristics of Building Materials.

3. ASTM E1264 Standard Classification for Acoustical wall panel Products.

B. Interior Systems Construction Association (CISCA):

1. CISCA Code of Practices

### 1.4 SYSTEM DESCRIPTION

A. Performance Requirements:

1. Provide acoustical wall panel assembly designed and tested to provide surface burning characteristics (ASTM E84) as follows:

a. Flamespread: 0.

b. Smoke Developed: 0.

2. Provide acoustical wall panel system which has been manufactured, fabricated and installed to provide Noise Reduction Coefficient (NRC) rating

as follows:

a. 0.40 NRC

1.5 SUBMITTALS

A. General: Submit listed submittals in accordance with Conditions of the Contract and Division 1 Submittal Procedures Section.

B. Product Data: Submit manufacturer's product data and installation instructions.

C. Samples: Submit selection and verification samples: 6 inch × 6 inch (152 × 152 mm) sample for each wood fiber wall panel unit required, showing full range of exposed texture to be expected in completed work.

D. Quality Assurance/Control Submittals: Submit the following:

1. Certificates: Submit manufacturer's certificate that products meet or exceed specified requirements.

1.6 QUALITY ASSURANCE

A. Installer Qualifications: Utilize an installer having demonstrated experience on projects of similar size and complexity.

B. Regulatory Requirements and Approvals:

1. International Code Council (ICC):

a. ICC-ES Evaluation Report ESR-1112

2. State of California

a. DSA Number PA-008

1.7 DELIVERY, STORAGE & HANDLING

A. General: Comply with Division 1 Product Requirement Section.

B. Delivery: Deliver materials in manufacturer's original, unopened, undamaged containers with identification labels intact.

1. Provide labels indicating brand name, style, size and thickness.

C. Storage and Protection: Store materials protected from exposure to harmful environmental conditions and at temperature and humidity conditions recommended by the manufacturer.

1. Prevent soiling, physical damage or wetting.

2. Store cartons open at each end to stabilize moisture content and temperature.

1.8 PROJECT/SITE CONDITIONS

A. Environmental Requirements:

1. Do not install wall panel panels until building is closed in and HVAC system is operational.

2. Locate materials onsite at least 24 hours before beginning installation to allow materials to reach temperature and moisture content equilibrium.

3. Maintain the following conditions in areas where acoustical materials are to be installed 24 hours before, during and after installation:

a. Relative Humidity: 65 - 75%.

b. Uniform Temperature: 55 - 70 degrees F (13 - 21 degrees C).

1.9 MAINTENANCE

A. Extra Materials: Provide 10% additional material for use by Owner in building maintenance and repair.

B. Provide new unopened cartons of extra materials, packaged with protective covering for storage and identified with appropriate labels.

**2.0 PRODUCTS**

2.1 MANUFACTURER

A. Tectum Inc. 105 South Sixth Street, Newark, OH 43055; Telephone: (888) 977-9691, (740) 345-9691; Fax: (800) 832-8869; E-mail: info@tectum.com; website: www.tectum.com, or approved equal.

2.2 ACOUSTICAL WALL PANEL SYSTEM

A. AC-1 Tectum Direct Attachment Wall Panels:

1. Material: Cementitious wood fibers FSC certified
2. Thickness: 1 inch
3. Length: 96 inches
4. Width: 23 3/4 inches
5. Edge Profile: Beveled

   Color: Natural, Painted in Field – See 099100 Painting
6. Mounting Style: “A”. Provide all fasteners.

B. AC-2 Tectum Direct Attachment Wall Panels:

1. Material: Cementitious wood fibers FSC certified
2. Thickness: 1 inch
3. Length: 96 inches
4. Width: 47 3/4 inches
5. Edge Profile: Beveled
6. Color: Natural, Painted in Field – See 099100 Painting
7. Mounting Style: “A”. Provide all fasteners.

2.3 ACCESSORIES

A. PROVIDE ACCESSORIES AS FOLLOWS:

1. Tectum Painted Head Drywall Screws:

a. Material: Steel.

b. Length: 1 5/8 inches (41 mm).

c. Color: Natural.

## 3.0 EXECUTION

### 3.1 MANUFACTURER'S INSTRUCTIONS

A. Comply with the instructions and recommendations of the wall panel system manufacturer.

B. Install materials in accordance with governing regulations, fire resistance rating requirements and industry standards applicable to work.

1. Comply with CISCA Code of Practices.

### 3.2 EXAMINATION

A. Site Verification of Conditions:

1. Examine surfaces scheduled to receive suspended or directly attached acoustical units for unevenness, irregularities and dampness that would affect quality and execution of work.

2. Do not proceed with installation of wall system until unacceptable conditions are corrected.

### 3.3 INSTALLATION

A. General: Do not begin installation until materials sufficient to complete an entire room are received and prepared for installation.

B. Measure and layout each wall panel outline on the wall prior to installation. Give the architect a 48-hour notice to review layout on site. Contractor to receive approval of layout from architect prior to installation .

C. Supports to accept screws no greater that 24" o.c. Supports to run perpendicular to panel direction.

D. Panel ends must fall over support. Panel ends are to be staggered.

E. Screwed to supports, three screws per panel width for 23¾" panels and five screws per panel width for 47¾" panels.

F. Screw head to be flush with panel surface.

G. Paint panels and mounting screws as indicated on Drawings and section 099100, Painting

3.4 CLEANING

A. Clean exposed surfaces of acoustical panels, trim, edge moldings and suspension members to comply with manufacturer's instructions for cleaning.

B. Touch up any minor finish damage.

C. Remove and replace work that cannot be successfully cleaned and repaired to permanently eliminate evidence of damage.

3.5 PROTECTION

A. Protect installed work from damage due to subsequent construction activity, including temperature and humidity limitations and dust control, so that the work will be without damage and deterioration at the time of acceptance by the Owner.

**END OF SECTION**

# SECTION 096420- WOOD GYMNASIUM FLOORING

## 1.0 GENERAL

### 1.1 RELATED SECTIONS

A. Section 096811 - Vented Cove Wall Base

B. Section 033923 – Membrane Concrete Curing

C. Concrete Sub Floor – See structural Drawings

1. Slab depression is:

   i. 2-3/4" (70 mm) for 33/32" (26 mm) flooring

2. The general contractor shall furnish and install the concrete subfloor depressing the slab sufficiently to accommodate the floor system. The slab shall be steel troweled and finished smooth to a tolerance of 3 mm in any 3 meter radius by the general contractor. High spots shall be ground level, and low spots filled in with approved leveling compound by the general contractor to the full approval of the installer (Flooring Contractor).

D. Membrane waterproofing – See Structural Drawings

1. Concrete subfloors on or below grade shall be adequately waterproofed beneath the slab and at the perimeter walls and on earth side of below grade walls by general contractor using suitable type membrane

### 1.2 REFRENCES

A. MFMA - Maple Flooring Manufacturers Association

B. DIN - Performance Standard DIN 18032, Part 2.

### 1.3 QUALITY ASSURANCE

A. Manufacturer

1. Manufacturer of resilient flooring shall be a firm specializing in manufacturing products specified in this section.
2. Manufacturer of flooring and subfloor components must be ISO 9001:2000 Certified to assure quality control of materials provided.
3. Basis of design shall be "NeoShok" sports floor system as provided by Connor Hardwood Courts, www.connorfloor.com, (800-833-7144).

4. Materials other than those listed must be approved 10 days prior by written addendum. Materials from nonapproved manufacturers will not be accepted.

B. Installer (Flooring Contractor)

1. The complete installation of the flooring system, as described in the scope of these specifications, shall be carried out by an experienced installer (Flooring Contractor), and the work shall be performed in accordance with most recent installation instructions of the manufacturer.
2. Installer (Flooring Contractor) shall be liable for all matters related to installation for a period of one year after the floor has been substantially installed and completed.

C. Performance Testing

1. Flooring system shall have been independently tested and evaluated for Athletic Performance according to the International Standard DIN 18032, Part 2.
2. Independent DIN testing laboratory shall have Scientific Body Membership in the International Association of Sports Surface Sciences (ISSS). Test equipment shall have been calibrated and certified through the ISSS.
3. DIN testing engineer shall be an ISO 17025 System member rated for each performed test conducted.
4. Flooring system shall have been independently tested and evaluated for Engineering Performance according to the Structural Testing and Engineering Measures (STEM).

## 1.4 SUBMITTALS

A. Specification - Submit Connor NeoShok specification sheets.

B. Sample - Submit one sample of specified system, if requested by architect.

C. Maintenance Literature - Upon completion of floor installation, send to owner, attendants or individuals in charge and responsible for the upkeep of the building a CARE CARD. This card spells out care and maintenance instructions including temperature and humidity ranges for areas where flooring is installed.

## 1.5 WORKING CONDITIONS

A. The wood flooring specified herein shall not be installed until all masonry, painting, plaster, tile, marble and terrazzo work is completed, and overhead mechanical trades and painters have finished in the wood floor areas. The building shall be enclosed and weathertite.

B. The concrete subfloor shall be determined dry by industry standard testing procedures, free of foreign materials and turned over to the installer (Flooring Contractor) broom clean. Moderate room temperature of 18 degrees Celsius or more shall be maintained a week preceding and throughout the duration of the work. Humidity conditions within the building shall approximate the humidity conditions that will prevail when the building is occupied.

C. Permanent heat, light and ventilation shall be installed and operating during and after installation, maintaining a range of temperature and humidity compatible with the expected low and high moisture content of the flooring. The wood moisture content range is determined by the flooring contactor based on the facility's mechanical controls and/or geographical location.

D. Flooring must be stored in a dry, well-ventilated area, not in contact with masonry, to acclimate to building conditions and shall be installed at moisture content compatible with the normally expected environmental range of temperature and relative humidity achieved while the facility is occupied.

E. General Contractor shall lock floor area after floor is finished to allow proper cure time. If general contractor or owner requires use of gym after proper cure time, he shall protect the floor by covering with non-marring Kraft paper or red rosin paper with taped joints until acceptance by owner of complete gymnasium floor.

F. Working conditions as described above shall be followed. Variations and substitutions shall be submitted for approval to the architect who shall advise Connor of the same.

## 1.6 HUMIDITY CONTROL

A. Since all wood flooring will expand and contract as relative humidity varies, it is important to minimize extremes between low and high. Hardwood flooring is manufactured at moisture content most compatible with a 35%-50% relative humidity range. Geographical regions and available mechanicals determine the typical range of temperature and humidity for each facility. Maintaining a 15% fluctuation between highest and lowest average indoor relative humidity provides limited shrinkage and growth. Facility managers should make use of available HVAC systems to prevent excessive tightening and shrinkage of flooring.

## 1.7 WARRANTY

A. Connor warrants that the materials it has supplied will be free from manufacturing defects for a period of one year. The foregoing warranty is in lieu of and excludes all other warranties not expressly set forth herein, whether express or implied in

operation of law or otherwise, including, but not limited to, any implied warranties of merchantability or fitness. This warranty is expressly limited to the flooring materials (goods) supplied by Connor. This warranty does not cover floor damage caused (wholly or in part) by fire, winds, floods, moisture, other unfavorable atmospheric conditions or chemical action, nor does it apply to damage caused by ordinary wear, misuse, abuse, negligent or intentional misconduct, aging, faulty building construction, concrete slab separation, faulty or unsuitable subsurface or site preparation, settlement of the building walls or faulty or unprofessional installation of Connor flooring systems.

B. Connor shall not be liable for incidental or consequential losses, damages or expenses directly or indirectly arising from the sale, handling or use of the materials (goods) or from any other cause relating thereto, and their liability hereunder in any case is expressly limited to the replacement of materials (goods) not complying with this agreement, or at their elections, to the repayment of, or crediting buyer with, an amount equal to the purchase price of such materials (goods), whether such claims are for breach of warranty or negligence. Any claim shall be deemed waived by buyer unless submitted to Connor in writing within 30 days from the date buyer discovered, or should have discovered, any claimed breach.

## 2.0 PRODUCTS

### 2.1 MATERIALS

A. Vapor Barrier – 0.2 mm polyethylene.

B. Resilient Pads

1. Optional NeoShok pad -

a. Connor NeoShok Black-50D durometer (aerobic or dance floors)

C. Subfloor - 2 layers of 12 mm plywood sheathing, Exposure 1.

D. Flooring (Connor Laytite Maple)

1. 26 mm X 38 mm, First Grade, Northern Hard Maple Flooring, TGEM, MFMA Grade marked and stamped as manufactured by Connor Hardwood Courts, Amasa, MI.

2. Treating - Flooring shall be treated with WOODLIFE-3 preservative.

E. Fasteners

1. Flooring fasteners – 51 mm barbed cleats or coated staples.

2. Subfloor fasteners – 25 mm staples or equivalent.

F. Finish Materials - Connor oil modified polyurethane seal and finish or equal.

G. Wall Base – 76 mm X 102 mm, heavy duty, molded, vented cove base with pre-molded outside corners.

## 3.0 EXECUTION

### 3.1 EXECUTION

A. Inspect concrete slab for proper tolerance and dryness. Report any discrepancies to general contractor and architect in writing.

B. Concrete slab shall be broom cleaned by general contractor.

C. Installer (Flooring Contractor) shall document all working conditions provided in General Specifications prior to commencement of installation.

### 3.2 INSTALLATION

A. Subfloor

1. Cover concrete with poly, sealing and lapping joints a minimum of 152 mm.

2. Subfloor:

i. Install lower layer of subfloor perpendicular to finish maple flooring spacing all edges 6 mm and stagger joints 1.219 meters. Provide 38 mm expansion voids at perimeter and at all vertical obstructions. The underside of first layer shall have NeoShok pads attached 305 mm on center (32 per sheet) and 152 mm from edges on all sides. Install solid blocking at doorways, under bleachers in the stacked position, and below portable goals. NOTE: Provide red 70D durometer pads under bleachers in the extended position.

ii. The second layer of subfloor shall be laid at a 45-degree angle over the first layer, spacing all edges 6 mm stagger joints 1.219 meters. Provide 38 mm expansion voids at perimeter and at all vertical

obstructions. Attach second layer of subfloor with fasteners 305 mm on center.

B. Maple Flooring

1. Install maple flooring by power nailing or stapling approximately 305 mm on center with end joints properly driven up.

2. If required, size joints between flooring strips to allow for intermediate expansion in accordance with local humidity conditions.

3. Provided 38 mm expansion voids at perimeter and at all vertical obstructions.

3.3 FINISHING

A. Maple Flooring

1. Machine sand with coarse, medium, and fine paper to a smooth, even and uniform surface.

2. Remove sanding dust from entire surface by tack or vacuum.

3. Inspect entire area of floor to insure that surface is acceptable for finishing, clean and completely free from sanding dust.

4. Apply two (2) coats of approved seal and two (2) coats of approved finish per manufacture's instructions.

5. Buff and clean floor between coats.

3.4 BASE INSTALLATION

A. Install vent cove base to walls with base cement or screws. Use pre-molded outside corners and mitered inside corners

B. See Section 096811 - Vented Cove Wall Base

3.5 CLEAN UP

A. General

1. During progress of the Work, do not allow the accumulation of empty containers or other excess items in areas specifically set aside for that purpose.

2. Prevent accidental spilling of materials and, in the event of such spill, immediately remove all spilled material and the waste or other equipment used to clean up the spill, and wash the surfaces to their original undamaged conditions, all at no additional cost to the City.

3.5 WARRANTY

A. The product delivered shall be free from defects.

B. Manufacturer's standard performance warranty, as available for specified installation and environmental conditions.

**END OF SECTION**

# SECTION 096810 – RUBBER BASE

## 1.0 GENERAL

### 1.1 SUMMARY

A. This Section includes all labor, materials, equipment, operations, or methods listed, mentioned, or scheduled on the plans and/or herein specified, including all incidentals necessary and required for completion of work under this Section.

B. Provide and install base and accessories where shown on Drawings and as specified herein.

### 1.2 RELATED SECTIONS

A. Documents affecting work of this Section include, but are not necessarily limited to, General Conditions, Special Conditions and Division 1 of these Contract Documents.

B. Division 9 – Finishes

C. Section 096811 – Vented Cove Base

D. Section 096420 – Wood Gymnasium Flooring

### 1.3 REFERENCES

A. American Society for Testing and Materials (ASTM)

1. ASTM D5116 - Standard Guide for Small-Scale Environmental Chamber Determinations of Organic Emissions From Indoor Materials/Products

2. ASTM D5417 - Standard Practice for Operation of the Vettermann Drum Tester

3. ASTM E84 - Standard Test Method for Surface Burning Characteristics of Building Material.

4. ASTM E662 -Standard Test Method for Specific Optical Density of Smoke Generated by Solid Materials

5. ASTM F1861 - Standard Specification for Resilient Wall Base

6. ASTM D 2240 - 85 Shore A

### 1.4 SUBMITTALS

A. Comply with provisions of Section 013300, Submittal Procedures.

B. Shop Drawings: Showing the location of molding and edge strips, and accessories shall be submitted to Architect for approval prior to installation. Copy of approved shop drawings to be available on job site during installation.

C. Product Data: Provide data on specified products, describing physical and performance characteristics, sizes, patterns, and method of installation.

D. Manufacturer's Installation Instructions: Indicate special procedures and perimeter conditions requiring special attention.

E. Maintenance Data: Include maintenance procedures manual, recommendations for maintenance materials and equipment, and suggested schedule for cleaning.

F. Certifications: Manufacturer to submit copies of the following independent laboratory reports showing compliance with requirements per these methods outlined in Part 2 of this Section. Submitted results shall represent average results for production goods of the specified style.

1 ASTM E648: Critical Radiant Flux- Class 1

2. ASTM E662: Smoke Density

3. ASTM D3936: Delamination

4. Other from methods specified in Part 2

1.5 DELIVERY, STORAGE, & HANDLING

A. Deliver materials to the site in manufacturer's original packaging listing manufacturer's name, product name, identification number, and related information.

B. Store in a dry location, between 60 degrees F and 80 degrees F and a relative humidity below 65%. Protect from damage and soiling.

C. Make stored materials available for inspection by the Owner’s representative.

D. Store materials in area of installation for minimum period of 48 hours prior to installation.P

1.6 PROJECT CONDITIONS

A. Maintain minimum 65 degrees F ambient temperature and 65% Relative Humidity for 72 hours prior to, during, and 48 hours after installation.

B. Do not install base until space is enclosed and weatherproof, wet-work in space is completed and nominally dry, work above ceilings is complete and ambient temperature and humidity conditions are and will be continuously maintained at values near those indicated for final occupancy.

1.7 EXCESS MATERIALS

A. Provide additional 5% of each type, color, and pattern furnished; product to be rolled and bound. Coordinate storage location with the Owner.

B. Deliver all unused base and large scraps to the Owner for "attic stock." Dispose of scraps less than 8" in length.

**2.0 PRODUCTS**

2.1 MANUFACTURERS

A. Base: Burke Flooring Products, 2250 S. 10th St., San Jose, CA 95112, 1-800-447-8442. www.burkeflooring.com

2.2 MATERIALS

A. Rubber Wall Base:

1. 1/8" Molded Rubber Wall base Type TS.

2. Type & Thickness: 1/8" coved base

a. Height: See Schedule

b. Length: 4 feet

c. Vulcanized thermoset rubber; 1/8 inch thick, satin finish.

d. Color: See Schedule

e. Substrate adhesives pursuant to manufacturer’s recommendations.

f. Conformance:

1) ASTM F1861-98, Type TS, Group 1, Styles A & B.

2) FS SS-W-40a, Type I, Styles A & B.

3) ASTM E84 > Class B rating with smoke density of 150-200.

B. Accessories:

1. Materials recommended by manufacturer(s) for patching, priming, chemically welding the seams, etc.

2. Adhesives: Products to be supplied with a pre-cured, mill-applied or other "dry" adhesive system when available. Otherwise, adhesive should be full spread, extremely low VOC in compliance with CRI Indoor Air Quality Adhesive Testing Program requirements, compatible with materials being adhered, as recommended by the Manufacturer.

3. Base and Transition Strips: As specified in applicable Sections.

2.3 SCHEDULE

| **Reference #** | **Series** | **Color** | **Height** | **Notes** |
|---|---|---|---|---|
| RB-1 | See Section 096811 | See Section 096811 | 4” | Base to be installed by wood gymnasium flooring sub -See Section 096420 & 096811 |
| RB-2 | Burke TS | 701 Black | 2 ½” | |
| **Note: Verify location, type and size with drawings-Report any discrepancies to Architect prior to ordering.** | | | | |

## 3.0 EXECUTION

3.1 EXAMINATION/PREPARATION

A. Do not scale the Architect’s drawings or calculate sizes from dimensions shown. Measure each space to receive base as a basis of supplying and cutting.

B. Meet with General Contractor several days prior to installation. Discuss various areas of responsibility so that installation and acceptance of base will be a smooth transition between trades, preventing costly down-time. Discuss these subjects:

1. Remove all deleterious substances from substrate(s) that would interfere with or be harmful to the installation. (i.e., floor wax)

2. Fill cracks, joints, holes, and other defects.

3. Verify that substrate surface is dust-free and free of substances that would impair bonding of product.

4. There will be no exceptions to the provisions stated in the Manufacturer's installation instructions.

## 3.2 INSTALLATION – GENERAL

A. In rooms Studio #128 & Storage #128A rubber base is to be installed by the wood flooring installer.

B. Install product in accordance with manufacturer's installation instructions.

C. Keep materials and adhesives at 65˚-80˚F for 24 hours before, during, and after installation. Surface to receive Burke Base must be clean, dry and free of any foreign substances.

D. NOTE: For base installations on any non-porous surfaces, a co-adhesive method of installation applied to both surfaces with contact bond adhesive should be used. Vinyl wall covering must be cut up to the height of wall base or just below top of base for proper base installation.

E. Wall areas to receive the base must be completely clean, dry, smooth, and free of oil, grease, rust, paint, varnish, shellac, or any other foreign substances. Cracks, holes, or major wall imperfections should be filled with latex underlayment.

F. All coiled wall base shall be unrolled and allowed to lay flat for a period of at least 24 hours at 65ºF prior to installation. Resilient wall base shall be rolled, with a J-hand roller, after installation, to ensure proper bonding.

G. On dry, porous, absorbent surfaces, the base should be cemented with Burke BR-101, adhesive and firmly pressed to the walls.

H. After the Installation:

1. Remove all excess adhesive before it dries. Use cloth dampened with water.

2. Allow adhesive to set firm for approximately 24 hours before washing or applying any pressure.

## 3.3 CLEANING & PROTECTION

A. Remove all debris resulting from installation, including removal of excess adhesive from floor and wall surfaces without incurring damage.

B. All rubbish, wrappings, debris, trimmings, etc., to be removed from site and disposed of properly.

C. Clean surfaces and leave areas ready for use. After each area is installed, protect from soiling and damage by other trades.

**END OF SECTION**

# SECTION 096811 – VENTED COVE WALL BASE

## 1.0 GENERAL

### 1.1 MANUFACTURER

A. Tarkett Aurora Rd. Solon, Ohio 44139 Web: www.tarkettna.com E-mail: info@johnsonite.com Phone: (800) 899-8916 30000, (440) 543-8916 Tech: Ext 9297, Samples: Ext 9299

### 1.2 CONSTRUCTION

A. Johnsonite Vent Cove Wall Base is manufactured from a homogeneous composition of 100% synthetic rubber, high quality additives, and colorants designed specifically to meet the performance requirements of ASTM F-1861, Type TS, Group 1 (solid) Standard Specification for Resilient Wall Base. Vent Cove Wall Base is designed for hardwood floating floor constructions and is equipped with vertical, semi-circular vents along the back side of the wall base to ensure proper air circulation under the floor and permits free expansion of the floor. Outside corners with 3 - 11/16” (9.37 cm) returns are available.

### 1.3 STYLES

A. Specify Wall Base M-900 Black
B. Size: 4" (10.16 cm) high by 5/16" (7.94 mm) thick coved profile with a 3" (7.62 cm) long by 3/8" (9.53 mm) thick toe. Back surface grooved with vertical semi-circular (5/32" radius) vents (15 vents per 4 ft. length).
C. Length: 4' (1.22 m) Packaging: 16 lengths per carton
D. Outside corners available: CO-910 for color Black or CO-911

## 2.0 PRODUCT PERFORMANCE AND TECHNICAL DATA

### 2.1 HARDENESS

A. ASTM D 2240 − Not less than 85 Shore A

### 2.2 FIRE RESISTANCE

A. Meets ASTM E 648 − Class I
   a. Meets or exceeds the performance requirements for resistance to heat/light aging, chemicals, and dimensional stability when tested to the methods as described in ASTM F-1861.

## 3.0 EXECUTION

### 3.1 INSTALLATION

A. See manufacturer's vent cove wall base installation instructions for complete details.

### 3.2 ADHESIVES

A. Tarkett 960 Adhesive: Coverage: Porous Substrate: 200-250 linear ft. per gallon

B. Tarkett 946 Premium Contact Adhesive: Coverage: Non-porous Substrate: 24 to 36 sq. ft. per 1 kilogram unit 144 to 215 sq. ft. per 6 kilogram unit

### 3.3 AVAILABLILITY & COST

A. Available through authorized Tarkett distributors nationwide.

### 3.4 WARRANTY

A. Limited 2 year warranty. For complete details, contact Tarkett or an authorized Tarkett distributor.

### 3.5 MAINTENANCE

A. 72 hours after installation is completed, initial maintenance procedures must be implemented in accordance with manufacturer's requirements. Refer to Vent Cove Installation and Maintenance Instructions for complete maintenance details.

### 3.5 TECHNICAL SERVICES

A. Submittal samples to architect for verification and approval prior to ordering. Samples are available upon request from Tarkett. Samples shall be submitted in compliance with the requirements of the contract documents. Accepted and approved samples shall constitute the standard materials which represent materials installed on the project. For current Installation and Maintenance Instructions, Product Specifications, and other technical data, visit us on the web at www.tarkettna.com or contact Tarkett at 1-800-899-8916.

**END OF SECTION**

# SECTION 099100 - PAINTING

## 1.0 GENERAL

### 1.1 SUMMARY

A. This Section includes all labor, materials, equipment, operations, or methods listed, mentioned or scheduled on the plans and/or herein specified, including all incidentals necessary and required for completion of work under this Section.

B. Provide surface preparation and painting for all unfinished interior and exterior surfaces as indicated on project Drawings.

### 1.2 RELATED SECTIONS

A. Documents affecting work of this Section include, but are not necessarily limited to, General Conditions, Special Conditions and Division 1 of these Contract Documents.

B. Division 5 -See structural Drawings

E. Section 081116, Aluminum Interior Door and Frame System

C. Section 092900, Gypsum Board

D. Section 095113, Acoustical Wall Panels

E. Section 092423, Portland Cement Stucco

### 1.3 REFERENCES

A. American Society for Testing and Materials (ASTM):

1. ASTM D16 – Definitions of Terms Relating to Paint, Varnish, Lacquer, and Related products.

2. ASTM D2016 – Test Method for Moisture Content of Wood.

3. ASTM D2369 – Standard Test Method for Volatile Content of Coatings

4. ASTM D2697 – Standard Test method for Volume Nonvolatile Matter in Clear or Pigmented Coatings.

5. ASTM D3960 – Standard Practice for Determining Volatile Organic Compound (VOC) Content of Paints and Related Coatings

B. Master Painters Institute (MPI):

1. Approved Products List, current edition.

2. Gloss and Sheen Levels

3. "E" Range (environmental range of VOC levels)

C. National paint and coatings Association (NPCA):

1. Guide to U.S. Government Paint Specifications

2. Glossary of Terms: for terms not defined in the NPCS Glossary: ASTM D16 – Terminology Relating to Paint, Varnish, Lacquer and Related Products. For duplicate terms, the NPCA Glossary takes precedence.

1.4 SUBMITTALS

A. Comply with provisions of Section 013300, Submittal Procedures.

B. Submit 3 brushouts of each color including the specific paint sheen specified. Submit on tempered hardboard 8 x 10 inch in size. Identify each sample as to finish, color, name, number and sheen or gloss name.

C. Submit MSDS to verify that each paint and coating used complies with the current VOC and chemical component limits of Green Seal's Standard GS-11 requirements.

D. Certification: Submit certification according to SSPC-QP 1 for applicator of coatings on exposed structural steel (ESS).

E. Operation and maintenance data: Submit data on types of paint, finish, color, name, number and sheen or gloss name, cleaning, touch-up and repair of painted and coated surfaces.

1.5 QUALITY ASSURANCE

A. Comply with governing codes and regulations.

B. Qualifications:

1. Manufacturer: Company specializing in manufacturing products specified in this section.

2. Applicator: Company specializing in performing work of this section with a minimum of five years experience in projects of similar scope and complexity.

a. Application of high performance coatings on exposed structural steel (ESS) shall be by a company certified according to SSPC-QP 1.

1.6 MOCK UP / FIELD SAMPLES

A. For all surfaces except exposed structural steel (Refer to Section 051200): Before proceeding with paint application, finish with specified number of coats, 16 square feet minimum of each wall and ceiling color scheme required, clearly indicating selected colors, finish texture, materials and workmanship. Sample areas shall be located to receive daylight and/or temporary artificial light similar to that which will occur at paint color.

1. Locate where directed by Architect.

2. If approved, sample areas will serve as a minimum standard for work throughout the building.

1.7 DELIVERY, STORAGE AND HANDLING

A. Deliver products to site in sealed and labeled containers; inspect to verify acceptability.

B. Container labels shall include manufacturer's name, type of paint, brand name, lot number, brand code, coverage, surface preparation, drying time, clean up requirements, color designation, and instructions for mixing and reducing.

C. Store paint materials at minimum ambient temperature of 45°F and a maximum of 90°F, in a ventilated area, and as required by manufacturer's instructions.

1.8 WARRANTY

A. Colors of all surfaces finished under this section shall, at the end of one year, have remained free from serious fading, and variations, if any, shall be uniform. All materials shall have their original adherence at the end of one year, and there shall be no evidence of blisters, running, peeling, scaling, chalking, streaks or stains at the end of this period. Washing with alkali-free soap and water shall remove surface dirt without producing any deteriorating effects.

1.9 EXTRA MATERIALS

A. Supply 1 gallon of each color; store where directed.

B. Label each container with color, in addition to manufacturer's label.

**2.0 PRODUCTS**

2.1 MANUFACTURER

A. Dunn Edwards Paints, www.dunnedwards.com, or approved equal.

B. Benjamin Moore Paint Company, www.benjaminmoore.com, or approved equal.

C. Sherwin Williams www.sherwin-williams.com

2.2 MATERIALS – GENERAL

A. Use best quality grade for all systems.

B. Catalog names and numbers refer to products as manufactured by Dunn Edwards and/or Benjamin Moore Paint Company

2.3 INTERIOR PAINT SYSTEMS:

A. Gypsum Board walls and soffits – Type 1 - Eggshell:

1. One Coat (Primer): latex basecoat equal to USG "Sheetrock First Coat."

2. Two Coats: acrylic latex eggshell

WP-1 <E> Field Color: W440V DecoSheen – DEW324 Phoenix Villa

WP-2 <E> Accent Color: W440V DecoSheen – Light Green

B. Ceilings – Type 2 – Semi Gloss:

1. One Coat (Primer): latex basecoat equal to USG "Sheetrock First Coat."

2. Two Coats: acrylic latex semi-gloss

CP-1 <E> Field Color: W411 Suprema – DEW324 Phoenix Villa

C. Unprimed Steel:

1. One Coat: 100% acrylic primer

2. Two Coats: 100% acrylic semi-gloss

a. HM doors, windows & Frames: W901 PermaSheen – Satellite (11-183MA-06\BM1483)

b. Exposed metal deck, structure, ductwork, piping, conduit and all other attached and associated exposed items: W901 PermaSheen – Champagne (11-145MA-6\Mettallic Plate)

D. Acoustic Wall Panels (Tectum)

1. 2 coats coats: Sherwin-Williams® Product: Waterborne Acrylic Dryfall (B42W1) 50 GAL. Drums MPI# 118 (or substitute Alkali-based, flat latex paints with similar properties)

    a. Tectum panels should be fastened in place prior to field painting.

    b. Ensure all fibers are fully covered with paint on all edges. White/Natural color of tectum is not to be seen through paint.

2.4 EXTERIOR PAINT SYSTEMS:

A. Cement Plaster/Stucco

1. First coat: 295 Kel-Bond Universal Primer

2. Two coats: 1245 Acry-Shield Low Sheen

    a. Match Benjamin Moore 2172-10 Copper Clay

B. Galvanized Metal & Structural Steel

1. One Coat: Etching primer

2. One Coat: 100% acrylic primer

3. Two Coats: 100% acrylic semi-gloss

a. Steel brace frame, exposed misc. steel - W901 PermaSheen – Champagne (11-145MA-6\Mettallic Plate)

**3.0 EXECUTION**

3.1 SURFACE CONDITIONS

A. Inspection- Number of Coats

1. Do not apply additional coats until completed coat has been inspected and approved by the Architect.

2. Prior to all work of this Section, carefully inspect the installed work of other trades and verify that all such work is complete to the point where this installation may properly commence.

3. Verify that paint finishes may be applied in strict accordance with all pertinent regulations and the requirements of these Specifications.

4. Only inspected and approved coats of paint will be considered in determining the number of coats applied.

B. Correction

1. Do not proceed with work in areas of discrepancy until any discrepancies have been resolved.

3.2 INSTALLATION - GENERAL METHODS: INTERIOR AND EXTERIOR

A. Inspect surfaces and correct unsatisfactory conditions. Beginning work means acceptance of substrates.

B. Comply with paint manufacturer's printed instructions and recommendations for preparation, priming and coating work. Coordinate with work of other Sections.

C. Remove hardware, accessories and items in place and not to be painted; provide protection prior to surface preparation and painting, reinstall removed items.

D. Use a slightly different shade for each coat of paint so that it may be readily identified.

E. Primer and intermediate coats shall be unscarred and completely integral when succeeding coats are applied. Sand and dust between each coat to remove defects visible from a distance of 5 feet.

F. Completely cover surfaces to be painted to provide an opaque, smooth surface of uniform finish, color, appearance and coverage. Painted surfaces with cloudiness, spotting, laps, brush marks, runs, sags, ropiness or other imperfections will not be acceptable.

G. Drying:

1. Allow sufficient drying time between coats.

2. Modify the period as recommended by the material manufacturer to suit adverse weather conditions.

H. Moisture Content

1. Use a moisture-meter approved by the Project Inspector to test surfaces.

2. Do not apply the initial coating until moisture meter reading is within limits recommended by the paint materials manufacturer.

I. Defects

1. Sand and dust between coats to remove all defects visible to the unaided eye from a distance of 5 feet.

3.3 REINSTALLATION OF REMOVED ITEMS

A. Following completion of painting in each space, reinstall all items removed for painting, using only workmen skilled in the particular trade.

3.4 CLEAN UP

A. General

1. During progress of the Work, do not allow the accumulation of empty containers or other excess items in areas specifically set aside for that purpose.

2. Prevent accidental spilling of paint materials and, in the event of such spill, immediately remove all spilled material and the waste or other equipment used to clean up the spill, and wash the surfaces to their original undamaged conditions, all at no additional cost to the City.

3.5 WARRANTY

A. The product delivered shall be free from defects.

B. Manufacturer's standard performance warranty, as available for specified installation and environmental conditions.

**END OF SECTION**

# Division 10:
# Specialties

# SECTION 101400 - SIGNAGE

## 1.0 GENERAL

### 1.1 SUMMARY

A. This Section includes all labor, materials, equipment, operations, or methods listed, mentioned or scheduled on the plans and/or herein specified, including all incidentals necessary and required for completion of work under this Section.

B. Review of Construction Drawings: Bidders shall, as a part of their bid, call specific attention to any construction details, materials, methods of fabrication or other similar items which they consider to be impractical or not in keeping with good industry practice. Requests for change orders for substitutions to address such items after award of contract shall not be accepted.

C. Allowance for Submittals: Allow for thorough and complete preparation of all submittal items described at Section 1.05, for delivery and/or shipping of same, and for resubmittal(s) as required until approval has been obtained for all items.

B. Provide and install non-illuminated interior and exterior identifying devices herein referred to as "signage," including:

1. Wall-mounted interior and exterior signage for room identification.

### 1.2 RELATED SECTIONS

A. Documents affecting work of this Section include, but are not necessarily limited to, General Conditions, Special Conditions and Division 1 of these Contract Documents.

B. Section 079000, Joint Protection: Sealants and Caulking

C. Section 081116, Aluminum Interior door & Frame System

D. Section 081400, Wood Doors

E. Section 092900, Gypsum Board

F. Section 099100, Painting

G. Divisions 22, 23, and 26 for coordination purposes

H. Divisions 31 and 32 for coordination purposes

### 1.3 REFERENCES

A. Americans with Disabilities Act (ADA).

B. American National Standards Institute (ANSI):

1. 1998 ICC/ANSI A117.1 - Accessible and Usable Buildings & Facilities

C. American Society for Testing and Materials (ASTM):

1. ASTM B209 - Specification for Aluminum and Aluminum-Alloy Sheet and Plate

2. ASTM D4956 - Specification for Retroreflective Sheeting for Traffic Control

D. American Architectural Manufacturer's Association (AAMA):

1. AAMA 611 - Voluntary Specifications for Anodized Architectural Aluminum

2. AAMA 2603 - Voluntary Specification, Performance Requirements and Test Procedures for Pigmented Organic Coatings on Aluminum Extrusions and Panels.

E. National Association of Architectural Metal Manufacturers (NAAMM):

F. Metal Finishes Manual for Architectural and Metal Products

G. CalDAG - California Disabled Accessibility Guidebook.

1.4 STRUCTURAL DESIGN AND ENGINEERING

A. Details in the Drawings indicate a general design approach for sign structures but do not necessarily include the specific fabrication details required for the complete structural integrity of the signs, nor do they necessarily consider preferred shop practices of individual contractors. Such specific fabrication details shall be provided by the Contractor, who shall ensure that all signs withstand any and all static, dynamic and/or erection loads that act upon them, including all such loads associated with handling, erecting, and servicing.

B. Contractor shall furnish a complete structural design for each and every sign type, incorporating all reasonable safety factors necessary to protect the Owner and Contractor against public liability.

1. All such structural designs shall meet applicable local, state, and national codes, as well as testing laboratory listings, where required.

C. Contractor shall be responsible for the engineering and internal construction of all signs, and shall submit shop drawings and details for review by the Architect Shop drawings for Sign Type EX.1 shall be designed and stamped by a licensed Engineer currently registered in the State of California. Said stamped shop drawings shall specify all structural components and methods required to withstand the design wind load and design seismic load at the location of the sign(s).

1. All structural design shall meet applicable local, state, and national codes, as well as testing laboratory listings, where required.

2. Seismic Forces: Engineered shop drawings shall specify all necessary measures to withstand seismic forces at the project location.

3. Wind Load: Engineered shop drawings shall reflect the soil type and compaction and the design wind load at the project location. Assume maximum wind of 80mph and wind pressure of 12.5 psf unless otherwise indicated. Comply with the requirements of Chapter 16 or 6A, Section 1609, of the CBC as apply.

## 1.5 SUBMITTALS

A. Presubmittal Conference: Coordinate with the Architect prior to preparation of submittals to confirm submittal requirements and schedule.

B. Product Data: If requested by Architect, submit manufacturers' catalog sheets, brochures, diagrams, schedules, charts, illustrations, test results and/or other standard descriptive data.

1. Mark up each copy to identify pertinent materials, products or models.

2. Show dimensions and clearances required, performance characteristics and capacities, and wiring diagrams and/or controls as apply.

C. Shop Drawings:

1. All shop drawings shall be neat, well organized and clearly legible. Elevations and plan views from the Construction Drawings may be reproduced for the sake of expedience where appropriate.

2. All shop drawings shall be drawn to scale and not subsequently reduced to fit a drawing format.

3. Submit elevations and plan views for all sign types, including graphic layouts, complete dimensions, materials, locations of all exposed fasteners, colors and finishes. Determine the total quantity for each sign type and note it in the shop drawings.

4. Submit comprehensive section drawings for sign types where applicable, including sections of all typical members. Show fabrication and installation details, including details for securing members to one another, to building structures, and/or to site work. Show interior construction, reinforcements, anchorages, components and finishes.

Reproduction of section drawings shown in the Construction Drawings shall not be acceptable.

5. Site Condition Verification: Where required by the Architect for specific items, Contractor shall inspect site to confirm installation conditions, then submit shop drawings and/or written documentation for approval indicating proposed mounting devices.

6. Exact replications of Bid documents will be rejected.

D. Samples:

1. Color and Finish: Submit 3 each, 12 inch x 12 inch samples of all paint colors, screen colors, vinyl colors and material finishes. All paint and screen colors are to be applied to the appropriate substrate.

   a. Contractor to submit verification of paint manufacturer used for submittal.

   b. Prior to submittal, Contractor shall verify that all colors submitted as samples match accurately the samples or specifications provided by Architect.

2. Typeface(s): Submit complete typeface font(s), including upper and lower case letters, numbers and punctuation, for all typeface(s) specified. Also submit samples of letter and word spacing for each cap height specified.

E. Quality Control:

1. Samples, mock-ups and prototypes shall not be permanently installed, but shall be retained by the Architect for record and quality control, unless otherwise noted by the Architect.

2. If requested by Architect, submit manufacturer's installation instructions for each type of specialty sign. Include only pages which are pertinent, or manufacturer's standard drawings modified to delete non-applicable data.

## 1.6 QUALITY ASSURANCE

A. Do not scale drawings for dimensions. Use only the written dimensions indicated on the Drawings, unless such be found in error. Contractor shall

verify and be responsible for all dimensions and conditions shown by the Drawings, and shall visit the site to inspect and verify field conditions prior to fabrication and installation. The Architect shall be notified, in writing, of all discrepancies on Drawings, in field dimensions or conditions, and of changes required in construction details.

B. Provide each type of sign as a complete unit produced by a single manufacturer, including all required mounting accessories, fittings and fastenings.

C. All details shown in the Drawings shall be followed for exterior appearance. Minor changes in interior construction will be accepted in order to conform to Contractor's shop practices or engineering requirements when, in the Architect's sole judgment, such changes do not detract materially from design concept or intent. Contractor shall circle all such changes on the shop drawings.

D. Completed work shall be structurally sound, and free from scratches, distortions, chips, breaks, blisters, holes, splits or other disfigurements considered as imperfections for the specific material.

1.6 DELIVERY, STORAGE AND HANDLING

A. Use all means necessary to protect signs before, during and after installation.

1. In the event of damage, make all repairs and replacements necessary to the approval of the Architect and at no additional cost to the City.

B. Deliver materials to jobsite in manufacturer’s original unopened factory packaging.

C. Inspect materials at time of delivery to assure that specified products have been received.

D. Store materials in original packaging in a climate controlled environment and away from direct sunlight.

**2.0 PRODUCTS**

2.1 MANUFACTURER

A. Interior Signage (Non-Metal): Best Sign Systems, Inc., 1202 N. Park Ave., Montrose, CO 81401, 1-800-235-2378 or approved equal.

2.2 PLASTIC/ACRYLIC SIGNS

A. Acceptable Product: "MP Plastic"

1. Two-color scratch resistant, non-static, fire retardant, washable melamine laminate with a non-glare surface. Color to be selected by Architect.

2. Sign plaque material shall consist of melamine laminate with phenolic core, approximately 1/8" thick, with background painted a contrasting color.

3. Signs shall be of one-piece construction; added-on and/or engraved characters are unacceptable.

4. Lettering:

   a. Tactile characters (letters, numerals, and symbols) on signs shall be raised 1/32" from sign plate face.

   b. Character font style shall be "Sans Serif" in uppercase and be accompanied by Grade 2 Braille, per 1117B.5.5.1

   c. Raised characters on all signs shall be between 5/8" and 2" high.

   d. Characters shall be centered on sign.

   e. Characters and background shall be eggshell, matte or other approved non-glare finish. Characters shall contrast with their background - either light characters on a dark background or dark characters on a light background.

5. Sign Sizes:

   a. Room identification signs shall be 9” x9 ”

   c. Emergency Exit shall be 9" x 9"

   d. Exit signs shall be 9" x 9"

   e. Maximum Occupancy signs shall be 9" x 9"

## 2.5 ACCESSORIES

A. Vinyl foam tape.

## 2.6 BRAILLE SYMBOLS

A. Contracted California Grade 2 Braille shall be used wherever Braille symbols are specifically required.

1. Dots shall be 1/10 inch on centers in each cell with 2/10 inch space between cells.

2. Dots shall be raised a minimum of 1/40 inch above the background.

B. Mounting Location and Height: Where permanent identification is provided for rooms and spaces, raised letters shall be provided and shall be accompanied by Braille in conformance with Section 3105A.(e)7, The CalACS Accessibility Standards Interpretive Manual. Signs shall be installed on the wall adjacent to the latch outside of the door. Where there is no wall space on the latch side, including at double leaf doors, signs shall be placed on the nearest adjacent wall, preferably on the right. Mounting height shall be 60 inches above the finish floor to the center line of the sign. Mounting location shall be determined so that a person may approach within 3 inches of signage without encountering protruding objects or standing within the swing of a door.

2.7 POSTING OF ROOM CAPACITY

A. Any room having an occupant load of 50 or more where fixed seats are not installed, and which is used for classroom, assembly or similar purpose, shall have the capacity of the room posted in a conspicuous place on an approved sign near the main exit from the room. Posting shall be by means of a durable sign having contrasting color from the background to which it is attached. Such signs shall be maintained legible by the City or the City's authorized agent and shall indicate the number of occupants permitted for each room use. No person shall deface or remove such signs except as authorized by the enforcing agent.

**3.0 EXECUTION**

3.1 SURFACE CONDITIONS

A. Surface Conditions: Prior to installation of signs, examine areas and conditions in which the signage system(s) will be installed to verify that all surfaces are ready and painted.

1. Complete all finishing operations, including painting, before installing signage.

2. Wall surface shall be dry and free from dirt, grease and loose paint.

3.2 INSTALLATION

A. Install materials in accordance with manufacturer's written instructions for installation.

B. Locate sign units and accessories as indicated on the Drawings. See interior and exterior sign schedules below.

C. Install signs level, plumb, and at heights indicated.

D. Mounting height for all door-mounted signage shall be 60" centered from floor, centered to the center line of the sign.

E. Mounting location and height for wall-mounted signage:

1. Signs shall be installed on wall adjacent to the latch side of the door. Where there is no wall space on the latch side, sign shall be placed on the nearest adjacent wall, preferably to the right.

2. Mounting height shall be 60" above finish floor, centered to the center line of the sign, unless noted otherwise.

    a. Maximum Occupancy signs shall be mounted 80" above finished floor to center line of sign.

3. Mounting location shall be determined so that a person may approach within 3" of signage without encountering protruding objects or standing within the swing of a door.

4. Verbal description as to restroom usage, i.e. Men's, Women's, etc., shall be placed directly below the pictogram signage.

F. Adhesive: Follow manufacturer's instruction for complete application of recommended adhesive to ensure proper bonding of signage to the surface specified on the drawings.

## 3.3 SIGN SCHEDULES

A. All signs shall be engraved 1/4" plastic laminate. For sign design (where lettering/symbols are to appear on sign), see Sheet A7.4 for details. All Signage in Table 1 will be of this type unless otherwise noted. Refer to part 2.2 of this Section.

B. All Exterior signs shall be metal and are referenced in Table 2. Refer to part 2.3 of this Section.

C. Illuminated Exit signs – see Electrical Drawings for details.

## 3.4 SIGN LOCATIONS

A. All signs identifying permanent rooms and spaces shall be located in compliance with CBC 1117B.5.9: Center of sign to be 5'0" above finish floor. Sign to be located at latch side of door, or, if there is insufficient wall space, on the nearest wall, preferably to the right.

B. Symbol signs on restroom doors shall be located in compliance with CBC 1115B.5: Center of sign to be 5'0" above finish floor. Sign to be centered left to right on door.

**Table # 1: SIGN SCHEDULE - INTERIOR AND EXTERIOR**

| LOCATION (BY ROOM #) | DOOR # | ROOM SIGN | LOCATION (INT/EXT) | EMERGENCY EXIT ALARM WILL SOUND | MAX. OCCUPANCY LOAD SIGN | EXIT ROUTE SIGN | EXIT SIGN | ROOM NAME |
|---|---|---|---|---|---|---|---|---|
| 100F | 100A | | INT | X | | | | |
| 100F | 100B | X | INT | | | | | STORAGE |
| 100F | 100C | | INT | | | X | | |
| 128 | 128A | X | INT | | | X | | AEROBICS |
| 128 | 128B | X | INT | | | | | STORAGE |
| 128 | 128C | | INT | | X | | X | |
| 128A | 126D | X | INT | | | | | STORAGE |

3.5 SITE CLEAN UP

A. Final cleanup:

1. Clean and/or repair all evidence of installation work or damage to site work or other adjacent surfaces prior to completion of work.

2. Clean up work area after all installation has been completed. Restore all disturbed ground cover.

3. Remove all protective materials and dispose of properly off site.

3.6 CLEAN UP AND PROTECTION

A. At completion of installation, clean all sign surfaces in accordance with manufacturer's instructions.

B. Protect all signs from damage until acceptance by Architect; repair or replace damaged units as required.

C. Clean and/or repair all evidence of installation work or damage to adjacent surfaces prior to completion of work.

D. Remove all protective materials and dispose of properly off site.

3.7 CONTRACT CLOSE-OUT ITEMS

A. Provide Owner with one quart of paint for each paint color specified.

B. Provide Owner with written instructions for proper cleaning of the signs. Note any solvents that should not be used.

3.8 WARRANTY

A. Product delivered shall be free of defects.

**END OF SECTION**

# SECTION 102600 – WALL AND CORNER PROTECTION

## 1.0 GENERAL

### 1.1 SUMMARY

A. This Section includes all labor, materials, equipment, operations, or methods listed, mentioned or scheduled on the plans and/or herein specified, including all
incidentals necessary and required for completion of work under this Section.

B. Provision of corner guards as shown on project Drawings and as specified herein.

### 1.2 RELATED SECTIONS

A. Documents affecting work of this Section include, but are not necessarily limited
to, General Conditions, Special Conditions and Division 1 of these Contract Documents.

B. Section 092900 - Gypsum Board: Provision of gypsum board.

### 1.3 REFERENCES

A. ASTM - American Society for Testing and Materials

1. B221 - Specification for Aluminum-Alloy Extruded Bars, Rods, Wire, Shapes, and Tubes.

2. E84 - Test Method for Surface Burning Characteristics of Building Materials.

B. CBC - California Building Code, 2016 Edition

### 1.4 SUBMITTALS

A. Comply with Section 01 33 00.

B. Product data: Submit manufacturer's project data including installation instructions.

C. Shop drawings showing methods of attachment to substrate.

D. Samples:

1. 12 inch (300 mm) long samples of each type of wall and corner guard required.Include examples of joinery, corners, and field splices.

2. 7 x 9 inch (175 x 225 mm) samples of each type, thickness, color, and texture to be installed for Architect's approval.

E. Test Reports: Submit manufacturer's test reports and certification indicating compliance with applicable building codes.

F. Maintenance Instructions: Submit manufacturer's maintenance instructions for Protective Wallcovering.

1.3 QUALITY ASSURANCE

A. Single Source Responsibility: Obtain wall surface protection system components from a single source.

B. Provide Protective Wallcovering that conforms to applicable codes including IBC, SBCCI, BOCA, Life Safety, and CA01350.

C. Comply with specified project requirements regarding fit and finish.

1.4 DELIVERY, STORAGE, AND HANDLING

A. Delivery: Deliver materials in original factory wrappings and containers, clearly labeled with manufacturer and brand name and material.

B. Storage:

1. Store material indoors in a clean, dry area protected from damage and in accordance with manufacturer's instructions.

2. Maintain storage temperature above 50°F (10°C).

3. Store materials flat. Do not stand rolls or sheet on end.

C. Handling: Protect materials during handling and installation to prevent damage.

1.5 ENVIRONMENTAL REQUIREMENTS

A. Maintain constant minimum air temperature of 65°F (18°C) for a minimum of 48 hours before and during installation.

B. Maintain wall temperature between 65°F (18°C) and 85°F (29°C) during installation

C. Do not expose walls to direct sunlight during or after installation.

D. Do not install if relative humidity is greater than 80%

1.6 MAINTENANCE

A. Maintenance Instructions: Include precautions against cleaning materials and methods that may be detrimental to finishes and performance.

B. Replacement Materials: Minimum 5% of each type, color, and pattern of wall surface protection materials and components. Include accessory components as required. Replacement materials shall be from the same production run as installed materials. Package with protective coverings and appropriate labels.

**PART 2 – PRODUCTS**

2.1 MANUFACTURERS

A. Koroseal Wall Protection Systems, Muncy, PA. Ph: 800-628-0449; Fax: 330-668-7703;Internet Address: www.korogard.com.

B. Drawings and specifications are based on manufacturer's literature from Koroseal WallProtection Systems unless otherwise indicated.

2.2 CORNER GUARDS

A. Koroseal "Korogard" Series GS15: 16-guage Stainless Steel Corner Guard adhered to substrate corner. Exposed surfaces shall be free of discoloration or other imperfections.

1. Dimensions

a. Lag Length: 1-1/2" (38.1mm)-GS15

b. Angle: 90°

2. Material: Stainless Steel, type 304.

3. Finish: #4 Satin.

2.3 PROTECTIVE WALLCOVERINGS

A. Koroseal "Korogard" Protective Wallcovering: Rigid high-impact sheet. Comply with specified requirements of ASTM D 256 for impact resistance, ASTM E 84 for flame spread and smoke developed characteristics.

1. Class I/A Fire-Rated.

2. Sheet Thickness: 0.040 inch (1.0 mm) thick OR Sheet

Thickness: 0.060 inch (1.5 mm) thick, Class I/A Fire-Rated.

3. Color: Aegean

4. Texture: Standard-Haircell

2.4 ADHESIVES AND PRIMERS

A. Furnish adhesives and primers approved by Protective Wallcovering manufacturer

2.5 ACCESSORIES

A. Coordinate accessory moldings with drawings, if any.

B. Color Matched Accessory Moldings: Manufacturer's standard plastic.

1. J-Molding: Aluminum #JC12

2. Divider Bar: Plastic #87/88

3. Inside Corner: Plastic #83

4. Outside Corner: Plastic #85

5. Color: As selected in Protective Wallcoverings

C. Color Matched Caulk: Furnish color-matched calk by Protective Wallcovering manufacturer to ensure accurate match of colors.

2.6 FABRICATION

A. Fabricate components with tight seams and joints. Provide surfaces free of evidence of wrinkling, chipping, uneven coloration, dents, and other imperfections. Fabricate members and fittings to produce flush, smooth, and rigid hairline joints.

PART 3 – EXECUTION

3.1 EXAMINATION

A. Examine areas and conditions in which wall surface protection components and wall protection systems will be installed.

B. Complete finishing operations, including painting, before beginning installation of wall surface protection system materials.

C. Wall surfaces to receive impact-resistant wall covering materials shall be dry

and free from dirt, grease, loose paint, and scale.

D. Notify the Architect in writing if wall surfaces are not acceptable. Do not begin installation until unacceptable conditions have been corrected.

E. Verify by examination that wall surfaces are acceptable to receive the specified guard system.

3.2 SURFACE PREPARATION

A. Prepare walls in accordance with manufacturer's written instructions.

B. Remove dust, dirt, grease, oil, loose paint, scale, and existing wall covering.

C. Resurface uneven wall surfaces and damaged walls.

D. Seal walls with white primer seal.

3.3 INSTALLATION

A. Install Protective Wallcovering to walls in accordance with manufacturer's written instructions.

B. Allow Protective Wallcovering and adhesive to precondition for a minimum of 24 hours at a temperature between 65°F (18°C) and 85°F (29°C) before installation.

C. Install sheets with texture running in the same direction for uniform appearance.

D. Install corner guards to wall securely using mastic construction adhesive.

E. Install corner guards at each applicable location accurately in location, alignment, and elevation.

3.4 CLEANING

A. Clean Protective Wallcovering in accordance with manufacturer's instructions.

B. Remove excess adhesive and layout marks in manner recommended by manufacturer.

**END OF SECTION**

# SECTION 104413 – FIRE EXTINGUISHER CABINETS

## 1.0 GENERAL

### 1.1 SUMMARY

A. This Section includes all labor, materials, equipment, operations, or methods listed, mentioned or scheduled on the plans and/or herein specified, including all incidentals necessary and required for completion of work under this Section.

B. Provide and install semi-recessed fire-rated fire extinguisher cabinets as shown on project Drawings.

### 1.2 RELATED SECTIONS

A. Documents affecting work of this Section include, but are not necessarily limited to, General Conditions, Special Conditions and Division 1 of these Contract Documents.

B. Section 092900, Gypsum Board

C. Section 104416, Fire Extinguishers

### 1.3 REFERENCES

A. ASTM A366 - Commercial Steel (CS) Sheet, Carbon (0.15 Maximum Percent) Cold-Rolled.

### 1.4 SUBMITTALS

A. Comply with provisions of Section 013300, Submittal Procedures.

B. Product Data: Submit manufacturer's product data, including installation instructions.

C. Test Reports: Submit test reports from Warnock Hersey for fire-rated cabinets.

### 1.5 DELIVERY, STORAGE, AND HANDLING

A. Delivery: Deliver materials to site in manufacturer's original, unopened containers and packaging, with labels clearly identifying product name and manufacturer.

B. Storage: Store materials indoors in a clean, dry area in accordance with manufacturer's instructions.

C. Handling: Protect materials and finish from damage during handling and installation.

## 2.0 PRODUCTS

### 2.1 MANUFACTURER

A. Larsen's Manufacturing Company, Minneapolis Division, 7421 Commerce Lane N.E., Minneapolis, MN 55432, Phone: (763) 571-1181, Toll Free: 1-800-527-7367 Fax: (763) 571-6900, www.larsenmfg.com or approved equal.

### 2.2 MATERIALS

A. Fire-Rated Fire Extinguisher Cabinet: Architectural Series

1. Configuration:

   a. Non Rated: Model SS O-2409

2. Conformance: ADA requirements.

3. Cabinet Tub Size: 9 ½" x 24" x 6".

4. Cabinet Type: recessed.

5. Door Style: Occult style, clear tempered glass. Reinforced for flatness and rigidity. Latch access and handle.

6. Materials:

   a. Door Panel and Front: 18 gauge cold-rolled steel, ASTM A366.

   b. Finish of Door Panel, Front, and Interior Tub: stainless steel

## 3.0 EXECUTION

### 3.1 EXAMINATION

A. Examine areas to receive cabinets. Notify Architect if areas are not acceptable. Do not begin installation until unacceptable conditions have been corrected.

### 3.2 PREPARATION

A. Prepare rough openings using metal studs or double wood studs on all 4 sides of cabinet tub to be 1/4 inch larger than outside dimension of tub.

B. Ensure load bearing header be reinstalled if load bearing stud is cut to install cabinet.

### 3.3 INSTALLATION

A. Install cabinets in accordance with manufacturer's instructions at locations indicated on the drawings.

B. Install cabinets plumb, level, square, and rigid without warp or rack.

C. Secure cabinets to metal or wood studs using screws supplied by manufacturer.

D. Use manufacturer's supplied hardware.

3.4 ADJUSTING

A. Adjust doors and catches for smooth operation without binding.

B. Inspect and adjust locks to operate properly.

C. Touch-up marred finishes with manufacturer supplied paint.

D. Replace defective or damaged doors, glazing, or other components as directed by Architect.

3.5 CLEANING

A. Clean cabinets in accordance with manufacturer's instructions.

B. Do not use harsh cleaning materials or methods that would damage glazing or finish.

3.6 PROTECTION

A. Protect cabinets and finish from damage during construction.

**END OF SECTION**

# SECTION 104416 - FIRE EXTINGUISHERS

## 1.0 GENERAL

### 1.1 SUMMARY

A. This Section includes all labor, materials, equipment, operations, or methods listed, mentioned or scheduled on the plans and/or herein specified, including all incidentals necessary and required for completion of work under this Section.

B. Install City-furnished fire extinguishers where shown on project Drawings and as specified herein.

### 1.2 RELATED SECTIONS

A. Documents affecting work of this section include, but are not necessarily limited to, General Conditions, Special Conditions and Division 1 of these Contract Documents.

B. Section 104413, Fire Extinguisher Cabinets

### 1.4 QUALITY ASSURANCE

A. Use adequate numbers of skilled workmen who are thoroughly trained and experienced in the necessary crafts and who are completely familiar with the specified requirements and the methods needed for proper performance of the work of this Section.

### 1.5 SUBMITTALS

A. Comply with provisions of Section 013300, Submittal Procedures.

## 2.0 PRODUCTS

### 2.1 MATERIALS

A. Larsen's Manufacturing Company, MP Series – MP5 – dry chemical type, cast steel tank with pressure gauge, 5lb. nominal capacity.

1. U/L Rating: 2A-20BC

### 2.2 OTHER MATERIALS

A. Provide other materials, not specifically described but required for a complete and proper installation, as selected by the Contractor subject to the approval of the Architect.

## 3.0 EXECUTION

### 3.1 SURFACE CONDITIONS

A. Examine the areas and conditions under which work of this Section will be performed. Correct conditions detrimental to timely and proper completion of the Work. Do not proceed until unsatisfactory conditions are corrected.

### 3.2 INSTALLATION

A. Coordinate as required with other trades to assure proper and adequate provision in the work of those trades for interface with the work of this Section.

B. Install the work of this Section in strict accordance with the original design, pertinent requirements of governmental agencies having jurisdiction, and the manufacturer's recommended installation procedures as approved by the Architect.

C. Anchor all components firmly into position for long life under hard use.

### 3.3 WARRANTY

A. The product delivered shall be free from defects.

B. Manufacturer’s standard performance warranty, as available for specified installation and environmental conditions.

**END OF SECTION**

# Division 26:
# Electrical

# SECTION 260500 – GENERAL ELECTRICAL REQUIREMENTS

## PART 1 – GENERAL

1.1 Description of Work:

A. The work of this Section consists of providing all required labor, supervision, materials and equipment to satisfactorily complete all electrical installations that are shown on the Drawings, included in these specifications, or otherwise needed for a complete and fully operating facility.

B. Furnish and install all required in-place equipment, conduits, conductors, cables and any miscellaneous materials for the satisfactory interconnection and operation of all associated electrical systems.

1.2 Related Work:

A. This Section provides the basic Electrical Requirements which supplement the General Requirements of Division 01 and apply to all Sections of Division 26.

1.3 Submittals:

A. As specified in Division 01. Submit to the Architect shop drawings, manufacturer's data and certificates for equipment, materials and finish, and pertinent details for each system specified. Information to be submitted includes manufacturer's descriptive literature of cataloged products, equipment, drawings, diagrams, performance and characteristic curves as applicable, test data and catalog cuts. Obtain written approval before procurement, fabrication, or delivery of the items to the job site. Partial submittals are not acceptable and will be returned without review. Furnish manufacturer's name, trade name, catalog model or number, nameplate data, size, layout dimensions, capacity, project specification and paragraph reference, applicable Federal, Industry and Technical Society Publication References, and years of satisfactory service of each item required to establish contract compliance. Photographs of existing installations and data submitted in lieu of catalog data are not acceptable and will be returned without approval.

B. Organize submittals for equipment and items related to each specification section together as a package.

C. Proposed substitutions of products will not be reviewed or approved prior to awarding of the Contract.

D. Substitutions shall be proven to the Architect or Engineer to be equal or superior to the specified product. Architect’s decision is final. The Contractor shall pay all costs

incurred by the Architect and Engineer in reviewing and processing any proposed substitutions whether or not a proposed substitution is accepted.

E. If a proposed substitution is rejected, the contractor shall furnish the specified product at no increase in contract price.

F. If a proposed substitution is accepted, the contractor shall be completely responsible for all dimensional changes, electrical changes, or changes to other work which are a result of the substitution. The accepted substitution shall be made at no additional cost to the owner or design consultants.

1.4 Quality Assurance:

A. Codes: All electrical equipment and materials, including installation and testing, shall conform to the latest editions following applicable codes:

1. California Electrical Code (CEC).

2. Occupational Safety and Health Act (OSHA) standards.

3. All applicable local codes, rules and regulations.

4. Electrical Contractor shall posses a C-10 license and all other licenses as may be required. Licenses shall be in effect at start of this contract and be maintained throughout the duration of this contract.

B. Variances: In instances where two or more codes are at variance, the most restrictive requirement shall apply.

C. Standards: Equipment shall conform to applicable standards of American National Standards Institute (ANSI), Electronics Industries Association (EIA), Institute of Electrical and Electronics Engineers (IEEE), and National Electrical Manufacturers Association (NEMA).

D. Underwriter Laboratories (UL) listing is required for all equipment and materials where such listing is offered by the Underwriters Laboratories. Provide service entrance labels for all equipment required by the NEC to have such labels.

E. The electrical contractor shall guarantee all work and materials installed under this contract for a period of one (1) year from date of acceptance by owner.

F. All work and materials covered by this specification shall be subject to inspection at any and all times by representatives of the owner. Work shall not be closed in or covered before inspection and approval by the owner or his representative. Any material found not conforming with these specifications shall, within 3 days after being notified by the owner, be removed from premises; if said material has been installed,

entire expense of removing and replacing same, including any cutting and patching that may be necessary, shall be borne by the contractor.

1.5 Contract Documents:

A. Drawings and Specifications:

1. In the case of conflict between the drawings and specifications, the specifications shall take precedence.

2. Drawings and specifications are intended to comply with all law, ordinances, rules and regulations of constituted authorities having jurisdiction, and where referred to in the Contract Documents, said laws, ordinance, rules and regulations shall be considered as a part of said Contract Documents within the limits specified. The Contractor shall bear all expenses of correcting work done contrary to said laws, ordinance, rules and regulations if the Contractor knew or should have known that the work as performed is contrary to said laws, ordinances, rules and regulations and if the Contractor performed same (1) without first consulting the Architect for further instructions regarding said work and/or (2) disregarded the Architect's instructions regarding said work.

B. Drawings: The Electrical Drawings shall govern the general layout of the completed construction.

1. Locations of equipment, panels, pullboxes, conduits, stub-ups, ground connections are approximate unless dimensioned; verify locations with the Architect prior to installation.

2. Review the Drawings and Specification Divisions of other trades and perform the electrical work that will be required for those installations.

3. Should there be a need to deviate from the Electrical Drawings and Specifications, submit written details and reasons for all changes to the Architect for approval.

4. The general arrangement and location of existing conduits, piping, apparatus, etc., is approximate. The drawings and specifications are for the assistance and guidance of the contractor, exact locations, distances and elevations are governed by actual field conditions. Accuracy of data given herein and on the drawings is not guaranteed. Minor changes may be necessary to accommodate work. The contractor is responsible for verifying existing conditions. Should it be necessary to deviate from the design due to interference with existing conditions or work in progress, claims for additional compensation shall be limited to those for work required by unforeseen conditions as determined by the Architect.

5. All drawings and divisions of these specifications shall be considered as whole. The contractor shall report any apparent discrepancies to the Architect prior to submitting bids.

6. The contractor shall be held responsible to have examined the site and compared it with the specifications and plans and to have satisfied himself as to the conditions under which the work is to be performed. He shall be held responsible for knowledge of all existing conditions whether or not accurately described. No subsequent allowance shall be made for any extra expense due to failure to make such examination.

1.6 Closeout Submittals:

A. Manuals: Furnish manuals for equipment where manuals are specified in the equipment specifications or are specified in Division 01.

1.7 Coordination:

A. Coordinate the electrical work with the other trades, code authorities, utilities and the Architect.

B. Utility Company charges shall be paid by the Owner.

C. Contractor shall pay all inspection and other applicable fees and procure all permits necessary for the completion of this work.

D. Where connections must be made to existing installations, properly schedule all the required work, including the power shutdown periods.

E. When two trades join together in an area, make certain that no electrical work is omitted.

1.8 Job Conditions:

A. Operations: Perform all work in compliance with Division 01.

1. Keep the number and duration of power shutdown periods to a minimum.

2. Show all proposed shutdowns and their expected duration on the construction schedule. Schedule and carry out shutdowns so as to cause the least disruption to operation of the Owner's facilities.

3. Carry out shutdown only after the schedule has been approved, in writing, by the owner. Submit power interruption schedule 15 days prior to date of interruption.

B. Construction Power: Unless otherwise noted in Division 01 of these specifications, contractor shall make all arrangements and provide all necessary facilities for temporary construction power from the owner's on site source. Energy costs shall be paid for by the Owner.

C. Storage: Provide adequate storage for all equipment and materials which will become part of the completed facility so that it is protected from weather, dust, water, or construction operations.

1.9 Damaged Products:

A. Notify the Architect in writing in the event that any equipment or material is damaged. Obtain approval from the Architect before making repairs to damaged products.

1.10 Locations:

A. General: Use equipment, materials and wiring methods suitable for the types of locations in which they are located.

B. Dry Locations: All those indoor areas which do not fall within the definition below for Wet Locations and which are not otherwise designated on the Drawings.

C. Wet Locations: All locations exposed to the weather, whether under a roof or not, unless otherwise designated on the Drawings.

1.11 Safety and Indemnity:

A. The Contractor is solely and completely responsible for conditions of the job site including safety of all persons and property during performance of the work. This requirement will apply continually and not be limited to normal working hours. The contractor shall provide and maintain throughout the work site proper safeguards including, but not limited to, enclosures, barriers, warning signs, lights, etc. to prevent accidental injury to people or damage to property.

B. No act, service, drawing review or construction review by the Owner, the Engineer or their Consultants is intended to include reviews of the adequacy of the Contractors safety measures in or near the construction site.

C. The Contractor performing work under this Division of the Specifications shall hold harmless, indemnify, and defend the Owner, the Engineer, their consultants, and each of their officers, agents and employees from any and all liability claims, losses, or damage arising out of or alleged to arise from bodily injury, sickness, or death of a person or persons and for all damages arising out of injury to or destruction of property arising directly or indirectly out of or in connection with the performance of the work under

this Division of the Specifications, and from the Contractor's negligence in the performance of the work described in the construction contract documents, but not including liability that may be due to the sole negligence of the Owner, the Engineer, their Consultants or their officers, agents and employees.

D. If a work area is encountered that contains hazardous materials, the contractor is advised to coordinate with the owner and it's abatement consultant for abatement of hazardous material by the Owner's Representative. "Hazardous materials" means any toxic substance regulated or controlled by OSHA, EPA, State of California or local rules, regulations and laws. Nothing herein shall be construed to create a liability for Aurum Consulting Engineers regarding hazardous materials abatement measures, or discovery of hazardous materials.

1.12 Access Doors:

A. The contractor shall install access panels as required where floors, walls or ceilings must be penetrated for access to electrical, control, fire alarm or other specified electrical devices. The minimum size panel shall be 14" x 14" in usable opening. Where access by a service person is required, minimum usable opening shall be 18" x 24".

B. All access doors installed lower than 7'-0" above finished floor and exposed to public access shall have keyed locks.

C. Where specific information or details relating to access panels differ from Division 26 paragraph 1.12 of these specifications, or shown on the electrical drawings and details or under other Divisions of work, those requirements shall supersede these specifications.

1.13 Arc Flash:

A. The contractor shall install a clearly visible arc flash warning to the inside door of all panelboards and industrial control panels, as well as to the front of all switchboards and motor control centers that are a part of this project.

B. The warning shall have the following wording: line 1 "WARNING" (in large letters), line 2 "Potential Arc Flash Hazard" (in medium letters), line 3 & 4 "Appropriate Personal Protective Equipment and Tools required when working on this equipment".

## PART 2 - PRODUCTS

2.1 Standard of Quality:

A. Products that are specified by manufacturer, trade name or catalog number establish a standard of quality and do not prohibit the use of equal products of other manufacturers

provided they are established to be equal to the specified product and approved by the Architect prior to installation.

B. Material and Equipment: Provide materials and equipment that are new and are current products of manufacturers regularly engaged in the production of such products. The standard products shall have been in satisfactory commercial or industrial use for two years prior to bid opening. The two-year period includes use of equipment and materials of similar size under similar circumstances. For uniformity, only one manufacturer will be accepted for each type of product.

C. Service Support: Submit a certified list of qualified permanent service organizations including their addresses and qualification for support of the equipment. These service organizations shall be convenient to the equipment installation and able to render service to the equipment on a regular and emergency basis during the warranty period of the contract.

D. Manufacturer's Recommendations: Where installation procedures are required to be in accordance with manufacturer's recommendations, furnish printed copies of the recommendations prior to installation. Installation of the item shall not proceed until recommendations are received. Failure to furnish recommendation shall be cause for rejection of the equipment or material.

2.2 Nameplates:

A. For each piece of electrical equipment, provide a manufacturer's nameplate showing his name, location, the pertinent ratings, the model designation, and shop order number.

B. Identify each piece of equipment and related controls with a rigid laminated engraved plastic nameplate. Unless otherwise noted, nameplates shall be melamine plastic 0.125 inch thick, white with black center core. Surface shall be matte finish. Corners shall be square. Accurately align lettering and engrave into the core. Minimum size of nameplates shall be 0.5 by 2.5 inches unless otherwise noted. Where not otherwise specified, lettering shall be a minimum of 0.25 inch high normal block style. Engrave nameplates with the inscriptions indicated on the Drawings and, if not so indicated, with the equipment name. Securely fasten nameplates in place using two stainless steel or brass screws.

2.3 Fasteners:

A. Fasteners for securing equipment to walls, floors and the like shall be either hot-dip galvanized after fabrication or stainless steel.

2.4 Finish requirements:

A. Equipment: Refer to each electrical equipment section of these Specifications for painting requirements of equipment enclosures. Repair any final paint finish which has been damaged or is otherwise unsatisfactory, to the satisfaction of the Architect.

B. Wiring System: In finished areas, paint all exposed conduits, boxes and fittings to match the color of the surface to which they are affixed.

**PART 3 - EXECUTION**

3.1 Workmanship:

A. Ensure that all equipment and materials fit properly in their installation.

B. Perform any required work to correct improperly fit installation at no additional expense to the owner.

C. All electrical equipment and materials shall be installed in a neat and workmanship manner in accordance with the "NECA-1 Standard Practices for Good Workmanship in Electrical Contracting". Workmanship of the entire job shall be first class in every respect.

3.2 Equipment Installations:

A. Provide the required inserts, bolts and anchors, and securely attach all equipment and materials to their supports.

B. Do all the cutting and patching necessary for the proper installation of work and repair any damage done.

C. Earthquake restraints: all electrical equipment, including conduits over 2 inches in diameter, shall be braced or anchored to resist a horizontal force acting in any direction as per CBC Section 1616A Title 24, part 2 and ASCE7-10, Sections 13.3 and 13.6 and Table 13.6-1.

D. Structural work: All core drilling, bolt anchor insertion, or cutting of existing structural concrete shall be approved by a California registered structural consulting engineer prior to the execution of any construction. At all floor slabs and structural concrete walls to be drilled, cut or bolt anchors inserted, the contractor shall find and mark all reinforcing in both faces located by means of x-ray, pach-ometer, or prof-ometer. Submit sketch showing location of rebar and proposed cuts, cores, or bolt anchor locations for approval.

3.3 Field Test:

A. Test shall be in accordance with Acceptance testing specifications issued by the National Electrical Testing Association (NETA).

B. Perform equipment field tests and adjustments. Properly calibrate, adjust and operationally check all circuits and components, and demonstrate as ready for service. Make additional calibration and adjustments if it is determined later that the initial adjustments are not satisfactory for proper performance. Perform equipment field test for equipment where equipment field tests are specified in the equipment Specifications. Give sufficient notice to the Architect prior to any test so that the tests may be witnessed.

C. Provide instruments, other equipment and material required for the tests. These shall be of the type designed for the type of tests to be performed. Test instrument shall be calibrated by a recognized testing laboratory within three months prior to performing tests.

D. Operational Tests: Operationally test all circuits to demonstrate that the circuits and equipment have been properly installed and adjusted and are ready for full-time service. Demonstrate the proper functioning of circuits in all modes of operation, including alarm conditions.

E. Re-testing will be required for all unsatisfactory tests after the equipment or system has been repaired. Re-test all related equipment and systems if required by the Architect. Repair and re-test equipment and systems which have been satisfactorily tested but later fail, until satisfactory performance is obtained.

F. Maintain records of each test and submit five copies to the Architect when testing is complete. All tests shall be witnessed by the Architect. These records shall include:

1. Name of equipment tested.
2. Date of report.
3. Date of test.
4. Description of test setup.
5. Identification and rating of test equipment.
6. Test results and data.
7. Name of person performing test.
8. Owner or Architect's initials.

G. Items requiring testing shall be as noted in the additional electrical sections of these specifications.

3.4 Cleaning Equipment:

A. Thoroughly clean all soiled surfaces of installed equipment and materials.

3.5 Painting of Equipment:

A. Factory Applied: Electrical equipment shall have factory applied painting system which shall, as a minimum, meet the requirements of NEMA ICS 6 corrosion-resistance test and the additional requirements specified in the technical section.

B. Field Applied: Paint electrical equipment as required to match finish of adjacent surfaces.

3.6 Records:

A. Maintain one copy of the contract Drawing Sheets on the site of the work for recording the "as built" condition. After completion of the work, the Contractor shall carefully mark the work as actually constructed, revising, deleting and adding to the Drawing Sheets as required. The following requirements shall be complied with:

1. Cable Size and Type: Provide the size and type of each cable installed on project.

2. Substructure: Where the location of all underground conduits, pull boxes, stub ups and etc. where are found to be different than shown, carefully mark the correct location on the Drawings. Work shall be dimensioned from existing improvements.

3. Size of all conduit runs.

4. Routes of concealed conduit runs and conduit runs below grade.

5. Homerun points of all branch circuit.

6. Location of all switchgear, panels, MCC, lighting control panels, pullcans, etc.

7. Changes made as a result of all approved change orders, addendums, or field authorized revisions.

8. As Builts: At the completion of the Work the Contractor shall review, certify, correct and turn over the marked up Drawings to the Architect for his use in preparing "as built" plans.

9. As built Drawings shall be delivered to the Architect within ten (10) days of completion of construction.

3.7 Clean Up:

A. Upon completion of electrical work, remove all surplus materials, rubbish, and debris that accumulated during the construction work. Leave the entire area neat, clean, and acceptable to the Architect.

3.8 Mechanical and Plumbing Electrical Work:

A. The requirements for electrical power and/or devices for all mechanical and plumbing equipment supplied and/or installed under this Contract shall be coordinated and verified with the following:

1. Mechanical and Plumbing Drawings.
2. Mechanical and Plumbing sections of these Specifications.
3. Manufacturers of the Mechanical and Plumbing equipment supplied.

B. The coordination and verification shall include the voltage, ampacity, phase, location and type of disconnect, control, and connection required. Any changes that are required as a result of this coordination and verification shall be a part of this Contract.

C. The Electrical Contractor shall furnish and install the following for all mechanical and plumbing equipment:

1. Line voltage conduit and wiring.
2. Disconnect switches.
3. Manual line motor starters.

D. Automatic line voltage controls and magnetic starters shall be furnished by the Mechanical and/or Plumbing Contractor and installed and connected by the Electrical Contractor. When subcontracted for by the Mechanical and/or Plumbing Contractor, all line voltage control wiring installed by the Electrical Contractor shall be done per directions from the Mechanical and/or Plumbing Contractor.

E. All low voltage control wiring for Mechanical and Plumbing equipment shall be installed in conduit. Furnishing, installation and connection of all low voltage conduit, boxes, wiring and controls shall be by the Mechanical and/or Plumbing Contractor.

F. Disconnects (Motor And Circuit)

1. Disconnect switches shall be as manufactured by ITE- Siemens, General Electric or Square D.

G. Disconnects (Motor: Fused):

1. Disconnect switches shall be provided and located at all motors.
2. Switches for three-phase motors shall be heavy-duty, horsepower rated three-pole, and surface mounted except as noted on drawings.
3. Switches containing more than three poles shall be as specified on the drawings.
4. Switches for single-phase, fractional horsepower motors shall be heavy-duty, horsepower rated.
5. Switches shall be horsepower rated.

H. Manual motor starters, where required, shall have toggle type operators with pilot light and melting alloy type overload relays, SQUARE D COMPANY, Class 2510, Type FG-1P (surface) or Type FS-1P (flush) or ITE, WESTINGHOUSE or GENERAL ELECTRIC equal.

END OF SECTION

# SECTION 260519 - LINE VOLTAGE WIRE AND CABLE

## PART 1 - GENERAL

1.1 Description of Work:

A. The work of this Section consists of providing all wire and cable rated 600 volts or less, including splices and terminations, as shown on the Drawings and as described herein.

1.2 Related Work:

A. See the following Specification Section for work related to the work in this Section:

1. 260542 Conduits, Raceways and Fittings.

2. 260533 Junction and Pull Boxes.

1.3 Quality Assurance

A. Field tests shall be performed as specified in paragraph 3.04 of this Section.

## PART 2 - PRODUCTS

2.1 Conductors:

A. Conductors shall be copper, type THHN/THWN/MTW oil and gasoline resistant, 600 volt rated insulation.

B. Conductors shall be stranded copper.

C. Minimum power and control wire size shall be No. 12 AWG unless otherwise noted.

D. All conductors used on this Project shall be of the same type and conductor material.

2.2 Cables:

A. All individual conductors shall be copper with type THHN/THWN, 600 volt rated insulation.

B. Insulation Marking - All insulated conductors shall be identified with printing colored to contrast with the insulation color.

E. Color Coding - As specified in paragraph 3.03.

F. Special Wiring - Where special wiring is proposed by an equipment manufacturer, submit the special wiring requirements to the Owner's Representative and, if approved, provide same. Special wire shall be the type required by the equipment manufacturer.

G. Other Wiring - Wire or cable not specifically shown on the Drawings or specified, but required, shall be of the type and size required for the application and as approved by the Owner's Representative.

H. Manufacturer - Acceptable manufacturers including Cablec, Southwire, or equal.

2.3 Terminations:

A. Manufacturer - Terminals as manufactured by T&B, Burndy or equal.

B. Wire Terminations – Stranded conductors shall be terminated in clamping type terminations which serve to contain all the strands of the conductor. Curling of a stranded conductor around a screw type terminal is not allowed. For screw type terminations, use a fork type stake-on termination on the stranded conductor. Use only a stake-on tool approved for the fork terminals selected.

C. End Seals - Heat shrink plastic caps of proper size for the wire on which used.

2.4 Tape:

A. Tape used for terminations and cable marking shall be compatible with the insulation and jacket of the cable and shall be of plastic material.

## PART 3 - EXECUTION

3.1 Cable Installation:

A. Clean Raceways - Clean all raceways prior to installation of cables as specified in Section 260542 - Conduits Raceway and Fittings.

B. All line voltage wiring shall be installed in conduit.

C. All feeder conductors shall be continuous from equipment to equipment. Splices in feeders are not permitted unless specifically noted or approved by the Electrical Engineer.

D. All branch circuit wiring shall be run concealed in ceiling spaces, walls, below floors or in crawl spaces unless noted otherwise.

E. Cable Pulling - Exercise care in pulling wires and cables into conduit or wireways so as to avoid kinking, putting undue stress on the cables or otherwise abrading them. No grease will be permitted in pulling cables. Only soapstone, talc, or UL listed pulling compound will be permitted. The raceway construction shall be complete and protected from the weather before cable is pulled into it. Swab conduits before installing cables and exercise care in pulling, to avoid damage to conductors.

F. Bending Radius - Cable bending radius shall be per applicable code. Install feeder cables in one continuous length.

G. Equipment Grounding Conductors - Provide an equipment grounding conductor, whether or not it is shown on the Drawings, in all conduits or all raceways.

H. Panelboard Wiring - In panels, bundle incoming wire and cables which are No. 6 AWG and smaller, lace at intervals not greater than 6 inches, neatly spread into trees and connect to their respective terminals. Allow sufficient slack in cables for alterations in terminal connections. Perform lacing with plastic cable ties or linen lacing twine. Where plastic panel wiring duct is provided for cable runs, lacing is not necessary when the cable is properly installed in the duct.

3.2 Cable Terminations and Splices:

A. Splices - UL Listed wirenuts.

B. Terminations - Shall comply with the following:

1. Make up and form cable and orient terminals to minimize cable strain and stress on device being terminated on.

2. Burnish oxide from conductor prior to inserting in oxide breaking compound filled terminal.

3.3 Circuit and Conductor Identification:

A. Color Coding - Provide color coding for all circuit conductors. Insulation color shall be white for neutrals and green for grounding conductors. Conductor colors shall be as follows:

| VOLTAGE | 208/120V | 480/277V |
|---|---|---|
| Phase A | Black | Brown |
| Phase B | Red | Orange |
| Phase C | Blue | Yellow |
| Neutral | White | Grey |
| Ground | Green | Green |

B. Color coding shall be in the conductor insulation for all conductors #10 AWG and smaller; for larger conductors, color shall be either in the insulation or in colored plastic tape applied at every location where the conductor is readily accessible.

C. Circuit Identification - All underground distribution and service circuits shall be provided with plastic identification tags in each secondary box and at each termination. Tags shall identify the source transformer of the circuit and the building number(s) serviced by the circuit.

3.4 Field Tests:

A. All systems shall test free from short circuits and grounds, shall be free from mechanical and electrical defects, and shall show an insulation resistance between phase conductors and ground of not less than the requirements of the CEC. All circuits shall be tested for proper neutral connections.

B. Insulation Resistance Tests: Perform insulation resistance tests on circuits with #2 AWG and larger conductors to be energized with a line-to-neutral voltage of 120 volts or more. Make these tests before all equipment has been connected. Test the insulation with a 500Vdc insulation resistance tester with a scale reading 100 megohms. The insulation resistance shall be 2 megohms or more. Submit results for review.

END OF SECTION

# SECTION 260526 – GROUNDING

## PART 1 - GENERAL

1.1 Section Includes:

A. Conduits, wires, ground rods and other materials for the electrical grounding system.

1.2 Related Sections:

A. Section 260500 - Electrical General Requirements.

## PART 2 - PRODUCTS

2.1 Ground Rod:

A. "Copperweld" ground rod conforming to or exceeding requirements of U.L. Specification No. 467 (ANSI C-33.8). Rod shall be 3/4" diameter and 10' in length, unless otherwise noted on the Drawings.

2.2 Below Grade Connections:

A. Compression fittings, Thomas & Betts, Series 52000, 53000 or 54000 or approved equal.

2.3 Hardware:

A. Bolts, nuts and washers shall be bronze, cadmium plated steel or other non-corrosive materials, approved for the purpose.

2.4 Waterproof Sealant:

A. Use Kearney "Aqua Seal" mastic sealant on all below grade clamp or compression type connections.

## PART 3 - EXECUTION

3.1 Grounding and Bonding:

A. Grounding and bonding shall be as required by codes and local authorities.

B. All electrical equipment shall be grounded, including, but not limited to, panel boards, terminal cabinets and outlet boxes.

C. The ground pole of receptacles shall be connected to their outlet boxes by means of a copper ground wire connecting to a screw in the back of the box.

D. A green insulated copper ground wire, sized to comply with codes, shall be installed in all conduit runs.

E. All metal parts of pull boxes shall be grounded per code requirements.

F. All ground conductors shall be green insulated copper.

G. The ground system electrodes shall be tested for resistance before the equipment ground conductors are connected. Maximum ground system resistance shall be 25 ohms. Install up to two additional ground rods to meet the 25 ohm requirement. Multiple ground rods shall not be less than 10 feet apart.

H. Grounding of the panels shall be completed as indicated on the Drawings.

END OF SECTION

# SECTION 260533 – OUTLET, JUNCTION AND PULL BOXES

## PART 1 - GENERAL

1.1 Description of Work:

A. The work of this Section consists of providing all required labor, supervision, materials and equipment to satisfactorily complete all electrical installations shown on the drawings, included in these Specification, or otherwise needed for a complete and fully operating facility. The work shall include but not be limited to the following:
B. Furnish and install all required material, supports and miscellaneous material for the satisfactory interconnection of all associated electrical systems.

1.2 Related Work:

A. See the following specification sections for work related to the work of this section.

1. 260500 General Electrical Requirements.

2. 260542 Conduits, Raceway and Fittings.

3. 260519 Line Voltage Wire and Cable.

## PART 2 - PRODUCTS

2.1 Outlet boxes, Junction and Pull boxes

A. Standard Outlet Boxes: Galvanized, steel, knock-out type of size and configuration best suited to the application indicated on the Drawings. Minimum box size shall be 4 inches square (octagon for most light fixtures) by 1-1/2 inches deep with mud rings as required.

B. Switch boxes: Minimum box size shall be 4 inches square by 1-1/2 inches deep with mud rings as required. Install multiple switches in standard gang boxes with raised device covers suitable for the application indicated.

C. Conduit bodies: Cadmium plated, cast iron alloy. Conduit bodies with threaded conduit hubs and neoprene gasketed, cast iron covers. Bodies shall be used to facilitate pulling of conductors or to make changes in conduit direction only. Splices are not permitted in conduit bodies. Crouse-Hinds Form 8 Condulets, Appleton Form 35 Unilets or equal.

D. Sheet Metal Boxes: Use standard outlet or concrete ring boxes wherever possible; otherwise use a minimum 16 gauge galvanized sheet metal, NEMA I box sized to Code requirements with covers secured by cadmium plated machine screws located six inches on centers. Circle AW Products, Hoffman Engineering Company or equal.

E. Flush Mounted Pull boxes and Junction boxes: Provide overlapping covers with flush head cover retaining screws, prime coated.

## PART 3 - EXECUTION

3.1 Outlet Boxes

A. General:

1. All outlet boxes shall finish flush with building walls, ceilings and floors except in mechanical and electrical rooms above accessible ceiling or where exposed work is called for on the Drawings.

2. Install raised device covers (plaster rings) on all switch and receptacle outlet boxes installed in masonry or stud walls or in furred, suspended or exposed concrete ceilings. Covers shall be of a depth to suit the wall or ceiling finish.

3. Leave no unused openings in any box. Install close-up plugs as required to seal openings.

B. Box Layout:

1. Outlet boxes shall be installed at the locations and elevations shown on the drawings or specified herein. Make adjustments to locations as required by structural conditions and to suit coordination requirements of other trades.

2. Locate switch outlet boxes on the latch side of doorways.

3. Outlet boxes shall not be installed back to back nor shall through-wall boxes be permitted. Outlet boxes on opposite sides of a common wall shall be separated horizontally by at least one stud or vertical structural member.

4. For outlets mounted above counters, benches or backsplashes, coordinate location and mounting heights with built-in units. Adjust mounting height to agree with required location for equipment served.

5. On fire rated walls, the total face area of the outlet boxes shall not exceed 100 square inches per 100 square feet of wall area.

C. Supports:

1. Outlet Boxes installed in metal stud walls shall be equipped with brackets designed for attaching directly to the studs or shall be mounted on specified box supports.

2. Fixture outlet boxes installed in suspended ceiling of gypsum board or lath and plaster construction shall be mounted to 16 gauge metal channel bars attached to main ceiling runners.

3. Fixture outlet boxes installed in suspended ceilings supporting acoustical tiles or panels shall be supported directly from the structure above where pendant mounted lighting fixture are to be installed on the box.

4. Fixture Boxes above tile ceilings having exposed suspension systems shall be supported directly from the structure above.

5. Outlet and / or junction boxes shall not be supported by grid or fixture hanger wires at any locations.

3.2 Junction And Pull Boxes

A. General:

1. Install junction or pull boxes where required to limit bends in conduit runs to not more than 360 degrees or where pulling tension achieved would exceed the maximum allowable for the cable to be installed. Note that these boxes are not shown on the Drawings.

2. Locate pull boxes and junction boxes in concealed locations above accessible ceilings or exposed in electrical rooms, utility rooms or storage areas.

3. Install raised covers (plaster rings) on boxes in stud walls or in furred, suspended or exposed concrete ceilings. Covers shall be of a depth to suit the wall or ceiling finish.

4. Leave no unused openings in any box. Install close-up plugs as required to seal openings.

5. Identify circuit numbers and panel on cover of junction box with black marker pen.

B. Box Layouts:

1. Boxes above hung ceilings having concealed suspension systems shall be located adjacent to openings for removable recessed lighting fixtures.

C. Supports:

1. Boxes installed in metal stud walls shall be equipped with brackets designed for attaching directly to the studs or shall be mounted on specified box supports.

2. Boxes installed in suspended ceilings of gypsum board or lath and plaster construction shall be mounted to 16 gauge metal channel bars attached to main ceiling runners.

3. Boxes installed in suspended ceilings supporting acoustical tiles or panels shall be supported directly from the structure above.

4. Boxes mounted above suspended acoustical tile ceilings having exposed suspension systems shall be supported directly from the structure above.

END OF SECTION

# SECTION 260542 - CONDUITS, RACEWAYS AND FITTINGS

## PART 1 - GENERAL

1.1 Description of Work:

A. The work of this section consists of furnishing and installing conduits, raceways and fittings as shown on the Drawings and as described herein.

1.2 Related Work:

A. See the following specification sections for work related to the work in this section:

1. 260543 Underground Ducts
2. 260544 In Grade Pull Boxes
3. 260519 Line Voltage Wire and Cable
4. 260533 Junction and Pull Boxes

## PART 2 - PRODUCTS

2.1 Conduits, Raceways:

A. Electrical Metallic Tubing (EMT) shall be hot-dip galvanized after fabrication. Couplings shall be compression or set-screw type.

B. Flexible Conduit: Flexible metal conduit shall be galvanized steel.

C. Galvanized Rigid Steel Conduit (GRS) shall be hot-dip galvanized after fabrication. Couplings shall be threaded type.

D. Rigid Non-metallic Conduit: Rigid non-metallic conduit shall be PVC Schedule 40 (PVC-40 or NEMA Type EPC-40) conduit approved for underground use and for use with 90˚ C wires.

2.2 Conduit Supports:

A. Supports for individual conduits shall be galvanized malleable iron one-hole type with conduit back spacer.

B. Supports for multiple conduits shall be hot-dipped galvanized Unistrut or Superstrut channels, or approved equal. All associated hardware shall be hot-dip galvanized.

C. Supports for EMT conduits shall be galvanized pressed steel single hole straps.

D. Clamp fasteners shall be by wedge anchors. Shot in anchors shall not be allowed.

2.3 Fittings:

A. Provide threaded-type couplings and connectors for rigid steel conduits; provide steel compression (watertight), or steel set-screw type for EMT, (die-cast zinc or malleable iron type fittings are not allowed). Provide threaded couplings and Meyers hubs for rigid steel conduit exposed to weather.

B. Fittings for flexible conduit shall be Appleton, Chicago, IL, Type ST, O-Z Gedney Series 4Q by General Signal Corp., Terryville, CT, T & B 5300 series, or approved equal.

C. Fittings for use with rigid steel shall be galvanized steel or galvanized cast ferrous metal; access fittings shall have gasketed cast covers and be Crouse Hinds Condulets, Syracuse, NY, Appleton Unilets, Chicago, IL, or approved equal. Provide threaded-type couplings and connectors; set-screw type and compression-type are not acceptable.

D. Fittings for use with rigid non-metallic conduit shall be PVC and have solvent-weld-type conduit connections.

E. Union couplings for conduits shall be the Erickson type and shall be Appleton, Chicago, IL, Type EC, O-Z Gedney 3-piece Series 4 by General Signal Corp., Terryvile, CT, or approved equal. Threadless coupling shall not be used.

F. Bushings:

1. Bushings shall be the insulated type.

2. Bushings for rigid steel shall be insulated grounding type, O-Z Gedney Type HBLG, Appleton Type GIB, or approved equal.

G. Conduit Sealants:

1. Fire Retardant Types: Fire stop material shall be reusable, non-toxic, asbestos-free, expanding, putty type material with a 3-hour rating in accordance with UL Classification 35L4 or as specified on the Drawings.

**PART 3 - EXECUTION**

3.1 Conduit, Raceway and Fitting Installation:

A. For conduit runs exposed to weather provide rigid metal (GRS).

B. For conduit run underground, in concrete or masonry block wall and under concrete slabs, install minimum ¾” size nonmetallic (PVC) with PVC elbows. Where conduits transition from underground or under slab to above grade install wrapped rigid metal (GRS) elbows and risers.

C. For conduit runs concealed in steel or wood framed walls or in ceiling spaces or exposed in interior spaces above six feet over the finished floor, install EMT.

D. Flexible metal conduit shall be used only for the connection of recessed lighting fixtures and motor connections unless otherwise noted on the Drawings. Liquid-tight steel flexible conduit shall be used for motor connections.

E. The minimum size raceway shall be 1/2-inch unless indicated otherwise on the Drawings.

F. Installation shall comply with the CEC.

G. From pull point to pull point, the sum of the angles of all of the bends and offset shall not exceed 360 degrees.

H. Conduit Supports: Properly support all conduits as required by the NEC. Run all conduits concealed except where otherwise shown on the drawings.

1. Exposed Conduits: Support exposed conduits within three feet of any equipment or device and at intervals not exceeding NEC requirements; wherever possible, group conduits together and support on common supports. Support exposed conduits fastened to the surface of the concrete structure by one-hole clamps, or with channels. Use conduit spacers with one-hole clamps.

    a. Conduits attached to walls or columns shall be as unobtrusive as possible and shall avoid windows. Run all exposed conduits parallel or at right angles to building lines.

    b. Group exposed conduits together. Arrange such conduits uniformly and neatly.

2. Support all conduits within three feet of any junction box, coupling, bend or fixture.

3. Support conduit risers in shafts with Unistrut Superstrut, or approved equal, channels and straps.

I. Moisture Seals: Provide in accordance with NEC paragraphs 230-8 and 300-5(g).

J. Where PVC conduit transitions from underground to above grade, provide rigid steel 90's with risers. Rigid steel shall be half-lap wrapped with 20 mil tape and extend minimum 12" above grade.

K. Provide a nylon pull cord in each empty raceway.

L. Provide galvanized rigid steel factory fittings for galvanized rigid steel conduit.

M. Slope all underground raceways to provide drainage; for example, slope conduit from equipment located inside a building to the pull box or manhole located outside the building.

N. Conduits shall be blown out and swabbed prior to pulling wires, or installation of pull cord in empty conduits.

END OF SECTION

# SECTION 260543 – UNDERGROUND DUCTS

## PART 1 - GENERAL

1.1 Description of Work:

A. The work of this section consists of furnishing and installing raceways, and raceway spacers with necessary excavation.

1.2 Related Work:

A. See the following specification sections for work related to the work of this section.

1. 02200 Excavation and Backfill

2. 260542 Conduit Raceway and Fittings

1.3 Standards and Codes:

A. Work and material shall be in compliance with and according to the requirements of the latest revision of the following standards and codes.

1. National Electrical Code (NEC) (Latest Revision)

2. California Electrical Code (CEC).

3. Underground Installations CEC - Article 300.5

4. Rigid NonMetallic Conduit CEC - Article 347

## PART 2 - PRODUCTS

2.1 Raceways:

A. As specified in Section 260542 Conduits, Raceways and Fittings.

## PART 3 - EXECUTION

3.1 Excavation:

A. As specified in Section 02200, Excavation and Backfill and as required for the work shown on the Drawings.

3.2 Install raceways as indicated on drawings.

3.03 Sand Encasement:

A. As specified in Section 02200 - Excavation and Backfill.

3.04 Backfill:

A. As specified in Section 02200 - Excavation and Backfill.

END OF SECTION

# SECTION 260544 - IN GRADE PULL BOXES

## PART 1 - GENERAL

1.1 Description of Work:

A. The work of this section consists of providing all labor, supervision, tools, materials, and performing all work necessary to furnish and install pre-cast concrete vaults, and pull boxes with necessary excavation.

1.2 Related Work:

A. See the following specification sections for work related to the work of this section.

1. 02200 Excavation and Backfill.

2. 260543 Underground Ducts.

1.3 Submittals:

A. As specified in Section 260500 and Division 01.

1. Catalog Data: Provide manufacturer's descriptive literature - Pre-cast Vaults, Pull Boxes and Accessories.

## PART 2 - PRODUCTS

2.1 Materials and Equipment:

A. General Requirements:

1. Pull boxes for electrical power, controls and other communication circuits shall consist of pre-cast reinforced concrete boxes, extensions' bases, and covers as specified herein and as indicated on the Drawings. Pre-cast units shall be the product of a manufacturer regularly engaged in the manufacture of pre-cast vaults and pull boxes. Acceptable manufacturers are Christy, Utility Vault, Brooks, Associated Concrete or equal.

B. Construction:

1. Pre-cast concrete vaults and pull boxes for electrical power distribution and communication circuits with associated risers and tops shall conform to ASTM C478 and ACI 318. Pull boxes shall be the type noted on the Drawings and shall be constructed in accordance with the applicable details as shown. Tops and walls shall consist of reinforced concrete. Walls and bottom shall be of monolithic concrete

construction. Duct entrances and windows shall be located near the corners of structures to facilitate cable racking.

C. Covers:

1. The word "ELECTRICAL" shall be cast in the top face of all electrical cable boxes. The word “Signal” or “Fire Alarm” shall be cast in the top of the boxes utilized for these systems.

**PART 3 - EXECUTION**

3.1 Installation:

A. Install pull boxes where required to limit bends in conduit runs to not more than 360 degrees or where pulling tension achieved would exceed the maximum allowable for the cable to be installed. Note that these boxes are not shown on the Drawings.

B. Pre-cast pull boxes shall be installed approximately where indicated on the Drawings. The exact location of each pull box shall be determined after careful consideration has been given to the location of other utilities, grading, and paving. All cable boxes and secondary pull boxes shall be installed with a minimum of 6-inch thick crushed rock or sand bedding.

C. Paved areas - Vaults and pull boxes located in areas to be paved shall be installed such that the top of the cover shall be flush with the finished surface of the paving.

D. Unpaved Areas - In unpaved areas, the top of vaults and pull box covers shall be approximately 2 inches above finished grade.

E. Joint Seals - Section joints of pre-cast vaults and pull boxes shall be sealed with compound as recommended by the manufacturer.

F. Trenching, Backfilling, and Compaction - Trenching, backfilling and compaction shall be as specified in Section 02200 - Excavation and Backfill.

END OF SECTION

# SECTION 262416 – PANELBOARDS AND DISTRIBUTION PANELS

## PART 1 – GENERAL

1.1 Description of Work:

A. The work of this Section consists of providing panelboards and circuit breakers as shown on the Drawings and as described herein.

1.2 Related Work:

A. See the following specification sections for work related to the work in this Section.

1. 260519 Line Voltage Wire and Cable
2. 260526 Grounding
3. 262816 Circuit Breakers

1.3 Submittals:

A. Shop Drawings - As specified in Division 01 and Section 260500. For each panelboard and distribution panel furnished under this Contract, submit manufacturer's name, catalog data, and the following information:

1. Panelboard / distribution panel type.
2. Main bus and terminal connection sizes.
3. Location of line connections.
4. Cabinet dimension.
5. Gutter space.
6. Gauge of boxes and fronts.
7. Finish data.
8. Voltage rating.
9. Breaker manufacturer, types, trip rating, and interrupting ratings.
10. When information is available on the Drawings, show breaker circuit numbers and locations along with trip ratings on a panelboard layout.

B. Single Submittal - A single complete submittal is required for all products covered by this Section.

C. Closeout Submittals: Submit operation and maintenance data for panelboards and circuit breakers including nameplate data, parts lists, factory and field test reports, recommended maintenance procedures and typewritten as-built panel schedules. Submit in accordance with Division 01.

## PART 2 – PRODUCTS

2.1 Panelboards:

A. General: Lighting and Receptacle Panelboards shall be the automatic circuit breaker type. The number and arrangement of circuits, trip ratings, spares and blank spaces for future circuit breakers shall be as shown on the Drawings or, if not shown, 42 circuits. All circuit breakers shall be quick-make, quick-break, thermal-magnetic, bolt-on type (unless otherwise noted on drawings ), with 1, 2 or 3 poles a shown, each with a single operating handle. Tandem or piggy-back breakers shall not be used.

B. Nameplates:

1. Each panelboard shall have a field mounted identifying, rigid, plastic nameplate giving the panel identification as shown on the Drawings.

2. Each panelboard shall have a manufacturer's nameplate showing the voltage, bus rating, number of phases, frequency and number of wires.

C. Construction:

1. Door and trim shall be finished to match finish type and color of surrounding wall. Box shall be hot-dip galvanized, and field finished to match the front.

2. Panelboards and enclosures shall conform to requirements of all relevant codes. Panelboards shall be suitable for use as service equipment.

3. Panelboards shall be furnished with hinged trim fronts with key latch and a typed directory card and holder. Panelboard circuits shall be arranged with odd numbers on the left and even numbers on the right. Provide weatherproof, NEMA type 3R enclosures for outdoor installation.

D. Busbars: Panelboard busbars shall be phase sequence type suitable for bolt-on circuit breakers. All busbars shall be copper.

E. Circuit Breakers: Circuit breakers shall be the molded case type with trip and interrupting ratings as shown on the Drawings.

F. Manufacturer:

1. Panelboard manufacturer shall be Square D, Siemens, General Electric], or Eaton Cutler Hammer. Panelboards shall be of the same manufacturer as the switchboard.

## PART 3 – EXECUTION

3.1 Installation: Panelboards and Distribution Panels shall be installed where indicated on the Drawings, and in accordance with the manufacturer's instructions.

3.2 Mounting:

A. Panelboards and Distribution Panels shall be mounted with the top of the box 6'-6" above the floor. Panelboards and Distribution Panels shall be plumb within 1/8-inch. The highest breaker operating handle shall not be higher than 72 inches above the floor.

3.3 Field Tests:

A. Insulation Resistance Tests: Perform insulation resistance tests on circuits with #2 AWG and larger conductors to be energized with a line-to-neutral voltage of 120 volts or more. Make these tests after all equipment has been connected, except that equipment which may be damaged by the test voltage shall not be connected. Test the insulation with a 500Vdc insulation resistance tester with a scale reading 100 megohms. The insulation resistance shall be 2 megohms or more. Submit results for review.

B. Grounding: Grounding shall conform to Section 260526.

C. Continuity: Panelboard and Distribution Panel circuits shall be tested for continuity prior to energizing. Continuity tests shall be conducted using a dc device with a bell or buzzer.

END OF SECTION

# SECTION 262726 – DEVICES WIRING

## PART 1 – GENERAL

1.1 Description of Work

A. The work of this section consists of:

1. Furnishing, installing, and connecting all duplex receptacles complete with wall plates and/or covers, as shown on the Drawings.

2. Furnishing, installing and connecting all light switches complete with wall plates and or handle operators, as shown on the Drawings.

1.2 Related Work:

A. See the following specification sections for work related to the work of this section:

1. 260542 Conduits, Raceways and Fittings.

2. 260519 Line Voltage Wire and Cable.

3. 260533 Junction and Pull Boxes.

1.3 Submittals: As specified in Section 260500 and Division 01.

A. Submit manufacturers published descriptive literature properly marked to identify the items to be supplied.

B. A single complete submittal is required for all products covered by this Section.

## PART 2 – PRODUCTS

2.1 Receptacles:

A. General - Receptacles shall be heavy duty, high abuse, grounding type.

B. [Tamper Resistant] Duplex Receptacles:

1. Receptacles shall be specification grade, rated 20 ampere, two-pole, 3-wire, 125 volt, NEMA 5-20 configuration, self-grounding with screw terminals. Color shall be as selected by the Architect.

2. Devices shall have a nylon face, back and side wired.

3. Manufacturer: Hubbell #DR20 Series [Hubbell #DR20_ _ TR], Leviton #16352 Series [Leviton # 16352-TRE _ _ Series].

C. GFCI Receptacles[Tamper Resistant]:

1. Device shall be rated 20 ampere, 2-pole, 3-wire, 120 volt, conforming to NEMA 5-20 configuration. Face shall be nylon composition. Unit shall have an LED type red indicator light, test and reset push buttons. Color shall be as selected by the Architect.

2. GFCI component shall meet UL 943 Class A standards with a tripping time of 1/40 second at 5 milliamperes current unbalance. Operating range shall extend from -31 °F to 158°F. Unit shall have transient voltage protection and shall be ceramic encapsulated for protection against moisture.

3. Manufacturer: Hubbell #GF20_ _LA Series [Hubbell # GFTR20 _ _ Series], Leviton #GFNT2 Series [Leviton #GFTR2 Series].

D. Weather Resistant GFCI Receptacles:

1. Device shall be rated 20 ampere, 2-pole, 3-wire, 120 volt, conforming to NEMA 5-20 configuration, Face shall be nylon composition. Unit shall have a LED type red indicator light, test and reset push buttons. Color shall be as selected by the architect.

2. GFCI component shall meet UL 943 Class A standards with a tripping time of 1/40 second at 5 milliamperes current unbalance. Operating range shall extend from -31 °F to 158°F. Unit shall have transient voltage protection and shall be ceramic encapsulated for protection against moisture.

3. Manufacturer: Hubbell #GFTR20 _ _ Series, Leviton #GFWR2 Series.

E. Surge Suppression Receptacles:

1. Device shall be rated 20 ampere, 2-pole, 3-wire, 120 volt. Face shall be nylon composition. Unit shall have an LED type "Power-on" indication light and damage-alert audible alarm. Color shall be as selected by the Architect.

2. Surge suppression protection shall be listed to UL standard 1449 and shall instantly absorb a transient surge of 6,000 volts minimum. A minimum of four (4) Metal Oxide Varistors shall be utilized to absorb transients.

3. Manufacturer: Hubbell #HBL8362S Series, Leviton #8380 Series.

2.2 Switches:

A. Switches shall be rated 20 amperes to 120/277 volts ac. Units shall be flush mounted, self-grounding, quiet operating rocker devices. Rocker color shall be as selected by the Architect.

   1. Manufacturer: Hubbell #DS_20_ _ Series, Leviton #5621 Series. See plans for single pole, three way and four way requirements.

B. Timed switches: Shall be as designed by Paragon Electric Company # ET2000f or Watt Stopper TS-400 rated for the voltage specified on drawings. Time-out shall be adjustable from 5 minutes up to 12 hours. Unit shall be provided with warning alarm.

C. Dimmer switches: Switch shall be a specified on drawings, color per architect. Heat fins shall not be removed, where dimmer switches are ganged together, care shall be taken to install correct size backbox to accommodate switches without removing fins.

2.3 Plates:

A. General - Plates shall be of the style and color to match the wiring devices, and of the required number of gangs. Plates shall conform with NEMA WD 1 , UL 514 and FS W-P-455A. Plates on finished walls shall be non-metallic or stainless steel. Plates on unfinished walls and on fittings shall be of zinc plated steel or case metal and shall have rounded corners and beveled edges.

B. Non-Metallic: Plates shall be plain with beveled edges and shall be nylon or reinforced fiberglass.

C. Stainless Steel: Plates shall be .040 inches thick with beveled edges and shall be manufactured from No. 430 alloy having a brushed or satin finish.

D. Cast Metal: Plates shall be cast or malleable iron covers with gaskets so as to be moisture resistant or weatherproof.

E. Blank Plates: Cover plates for future telephone outlets shall match adjacent device wall plates in appearance and construction.

F. Weatherproof Plate: Cover plates in wet and damp locations shall have recessed in-use covers, Taymac or equal. Back box shall be suitable for the wall material where it is installed.

G. Labeling: All switch and receptacle plates shall be labeled on the top portion of the plate with the panelboard and circuit number serving that device. Lettering shall be 3/16” minimum high, black color, on clear Mylar 3/8” tape. Manufactured by P-touch or equal.

## PART 3 – EXECUTION

3.1 Installation of Wiring Devices:

A. Interior Locations: In finished walls, install each device in a flush mounted box with washers as required to bring the device mounting strap level with the surface of the finished wall. On unfinished walls, surface mount boxes level and plumb.

B. Mounting Heights: Adjust boxes so that the front edge of the box shall not be farther back from the finished wall plane than 1/4-inch. Adjust boxes so that they do not project beyond the finished wall. Height of device shall be as follows unless otherwise noted on the drawings:

1. Receptacles 15 Inches from finished floor to bottom of box.

2. Toggle Switches 48 Inches from finished floor to top of box.

C. Receptacles:

1. Ground each receptacle using a grounding conductor, not a yoke or screw contact.

2. Install receptacles with connections spliced to the branch circuit wiring in such a way that removal of the receptacle will not disrupt neutral continuity and branch circuit power will not be lost to other receptacles in the same circuit.

3.2 Installation of Wall Plates:

A. General - Plates shall match the style of the device and shall be plumb within 1/16-inch of the vertical or horizontal.

B. Interior Locations, Finished Walls: Install non-metallic plates so that all four edges are in continuous contact with the finished wall surfaces. Plaster filling will not be permitted. Do not use oversized plates or sectional plates.

C. Interior (not wet) Locations, Unfinished Walls: Install stainless steel or cast metal cover plates.

D. Wet Locations: Install cast metal plates with gaskets on wiring devices in such a manner as to provide a rain tight weatherproof installation. Cover shall be [lockable] outdoor “in use” type.

E. Future Locations: Install blanking cover plates on all unused outlets.

3.3 Tests:

A. Receptacles:

1. After installation of receptacles, energize circuits and test each receptacle to detect lack of ground continuity, reversed polarity, and open neutral condition.

END OF SECTION

# SECTION 262816 - CIRCUIT BREAKERS

## PART 1 - GENERAL

1.1 Description of Work:

A. The work of this Section consists of providing circuit breakers as shown on the Drawings and as described herein.

1.2 Related Work: See the following Specification Sections for work related to the work in this Section.

A. 260500 General Electrical Requirements

B. 262413 Switchboards

C. 262416 Panelboards and Distribution Panels

1.3 Submittals:

A. Shop Drawings - Submittals shall be in accordance with Section 260500 and Division 01. For each circuit breaker furnished under this Contract, submit manufacturer's name, catalog data, and the following information:

1. Terminal connection sizes.

2. Voltage rating.

3. Breaker manufacturer, types, trip ratings and interrupting ratings.

B. Single Submittal - A single complete submittal is required for all products covered by this Section.

C. Closeout Submittals: Submit in accordance with and Section 16000 [260500], operation and maintenance data for circuit breakers including nameplate data, parts lists, manufacturer's circuit breaker timer, current, coordination curves, factory and field test reports and recommended maintenance procedures.

## PART 2 - PRODUCTS

2.1 Circuit Breaker: Each circuit breaker shall consist of the following:

A. A molded case breaker with an over center toggle-type mechanism, providing quick-make, quick-break action. Each circuit breaker shall have a permanent trip unit containing individual thermal and magnetic trip elements in each pole. Multipole circuit breakers shall have variable magnetic trip elements which are set by a single adjustment

to assure uniform tripping characteristics in each pole. Circuit breakers shall be of the bolt-on type unless otherwise noted.

B. Breaker shall be calibrated for operation in an ambient temperature of 40°C.

C. Each circuit breaker shall have trip indication by handle position and shall be trip-free.

D. Three pole breakers shall be common trip.

E. The circuit breakers shall be constructed to accommodate the supply connection at either end of the circuit breaker. Circuit breaker shall be suitable for mounting and operation in any position.

F. Breakers shall be rated as shown on Drawings.

G. Circuit breaker and/or Fuse/circuit breaker combinations for series connected interrupting ratings shall be listed by UL as recognized component combinations for use in the end use equipment in which it is installed. Any series rated combination used shall be marked on the end use equipment per CEC section 110-22.

H. Breakers shall be UL listed. Circuit breakers shall have removable lugs.

I. Lugs shall be UL listed for copper and aluminum conductors.

J. Breakers shall be UL listed for installation of mechanical screw type lugs.

K. Circuit breakers serving HACR rated loads shall be HACR type. Circuit breakers serving other motor loads shall be motor rated.

## PART 3 - EXECUTION

3.1 Mounting:

A. The highest breaker operating handle shall not be higher than 72 inches above the floor.

END OF SECTION

# SECTION 265100 - LIGHTING

## PART 1 – GENERAL

1.1 Description of Work:

A. The work of this section consists of providing a lighting system complete, including fixtures, lamps, hangers, reflectors, glassware, lenses, auxiliary equipment, ballasts and sockets.

1.2 Related Work:

A. See the following specification sections for work related to the work of this section:

1. 260500 General Electrical Requirements.

2. 260542 Conduit, Raceway and Fittings.

3. 260519 Line Voltage Wire and Cable.

4. 260533 Junction and Pull Boxes.

1.3 Submittals: In accordance with Division 01.

A. Submit descriptive data, photometric curves for each fixture configuration proposed.

B. Submit shop drawings showing proposed methods for mounting lighting fixtures.

C. Seismic Requirements: Submit:

1. Sketch or description of the anchorage system.

D. Submit Operation and Maintenance Data per Division 01.

1.4 Warranty: High Intensity Discharge lamps which fail within the first year after final acceptance shall be replaced by the Contractor with the warranty clause of the General Provisions.

## PART 2 – PRODUCTS

2.1 Fixtures

A. Fixtures shall be of the types, wattage's and voltages shown on the Drawings and be UL classified and labeled for the intended use.

B. Substitutions will not be considered unless the photometric distribution curve indicates the proposed fixture is equal to or exceeds the specified luminaire.

C. Luminaire wire, and the current carrying capacity thereof shall be in accordance with the CEC.

D. Luminaires and lighting equipment shall be delivered to the project site complete, with suspension accessories, aircraft cable, stems, canopies, hickeys, castings, sockets, holders, ballasts, diffusers, frames, and related items, including support and braces.

2.2 Ballasts:

A. Ballasts shall be of the types shown on the drawings. Ballasts shall be CBM certified and bear the UL label. Magnetic ballasts shall be the high power factor type. Electronic ballasts shall be suitable for lamps specified by Advance, Magnetek/Universal, Motorola or approved equal. Electronic ballast shall be CBM certified and have a 10% maximum total harmonic distortion.

B. All ballasts for fixtures installed outdoors shall provide reliable starting of lamps at 0°F at 90% of the nominal line voltage.

C. Ballasts producing excessive noise (above 36 dB) or vibration will be rejected and shall be replaced at no expense to the Owner.

2.3 Lamps:

A. Lamps shall be new at the time of acceptance and shall be General Electric, Osram /Sylvania, Phillips, or approved equal.

B. Unless otherwise noted on the drawings, lamps shall be third generation T8, 3500°K, and 85 CRI minimum.

1. Third Generation: Also known as High-Performance, Higher Lumen, or Super, the third generation of 32 Watt T8 lamps offers 3,100 lumens and a long-life rating of 24,000 hours. Efficacy is high, with lumens per watt in the range of 94 to 100. CRI is 82 to 86.

**PART 3 – EXECUTION**

3.1 Installation:

A. General:

1. All fixtures and luminaires shall be clean and lamps shall be operable at the time of acceptance.

2. Install luminaires in accordance with manufacturer's instructions, complete with lamps, ready for operation as indicated.

3. Align, mount, and level the luminaires uniformly.

4. Avoid interference with and provide clearance for equipment. Where an indicated position conflicts with equipment locations, change the location of the luminaire by the minimum distance necessary.

B. Mounting and Supports:

1. Mounting heights shall be as shown on the Drawings. Unless otherwise shown, mounting height shall be measured to the centerline of the outlet box for wall mounted fixtures and to the bottom of the fixture for suspended fixtures and to the bottom of the fixture for all other types.

2. Luminaire supports shall be anchored to structural members.

3. Pendant stem mounted luminaires shall be provided with ball aligners to assure a plumb installation and shall have a minimum 45 degree clean swing from horizontal in all directions. Sway bracing shall be installed as required to limit the movement of the fixture. Fixtures shall be allowed to sway a maximum of 45º without striking any object.

4. Fixture supports shall be designed to resist earthquake forces of seismic zone 4.

5. Refer to fixture mounting details on drawings for installation requirements.

6. Pendant cable mounted luminaries shall be provided with fully adjustable stainless steel aircraft cable hangers unless otherwise noted on the Drawings.

END OF SECTION

# Division 27:
# Communications

# SECTION 271000 – STRUCTURED CABLING

## PART 1 – GENERAL

1.1 RELATED DOCUMENTS:

A. Drawings and general provisions of Contract, including General and Supplementary Conditions and Division-1 Specification sections, apply to work of this section.

B. Division 26, Basic Materials and Methods sections apply to work specified in this section.

1.2 REFERENCE STANDARDS:

A. ANSI/TIA-492.AAAC-B – Detail Specification for 850-nm Laser-Optimized, 50-um Core Diameter/125-um Cladding Diameter Class 1a Graded-index Multimode Optical Fibers (OM3/OM4). Current Edition

B. ANSI TIA-492.CAAB – Detail Specification for Class IVa Dispersion-Unshifted Single-Mode Optical Fibers with Low Water Peak. Current Edition

C. ANSI/TIA-568-C.0 – Generic Communications Cabling for Customer Premises.

D. ANSI/TIA-568-C.1 – Commercial Building Communications Cabling Standard Part 1: General Requirements.

E. ANSI/TIA-568-C.2 – Balanced Twisted-Pair Telecommunications Cabling and Components Standards

F. ANSI/TIA-568-C.3 – Optical Fiber Cabling Components Standard

G. ANSI/TIA-569-C – Commercial Building Standard for Telecommunications Pathways and Spaces.

H. ANSI/TIA-606-B – Administration Standard for the Commercial Telecommunications Infrastructure.

I. ANSI/JSTD-607-B – Commercial Building Bonding and Grounding (Earthing) Requirements for Telecommunications.

J. NFPA 70 – National Electrical Code (NEC).

K. BICSI – TDMM, Building Industries Consulting Services International, Telecommunications Distribution Methods Manual (TDMM)

1.3 DESCRIPTION OF WORK:

A. The extent of telephone/data system work is indicated and is hereby defined to include, but not be limited to cable, raceway, outlet boxes, device plates, backboard, cabinets, grounding and miscellaneous items required for complete system.

B. Provide complete cable and outlet system as indicated and described herein. Work includes cable, jacks, terminal blocks, wire management, labeling, transient voltage surge suppression, patch cords, and all terminations. Every cable, conductor and fiber strand installed under this Project shall be properly terminated at both ends and tested.

C. Refer to other Division sections for requirements for raceways, boxes and fittings, wiring devices, and supporting devices, and other sections, as applicable.

D. Provide system testing as described herein.

1.4 QUALITY ASSURANCE:

A. Comply with applicable portions of NEC as to type products used and installation of components. Provide products and materials, which have been UL-listed and labeled. Comply with NEMA standards for low loss extended frequency cable and EIA/TIA TSB-36. Comply with EIA/TIA 568-A, EIA/TIA 569 and manufacturer's recommendations. Comply with EIA/TIA testing standards for horizontal cabling.

1.5 SUBMITTALS AND SUBSTITUTIONS:

A. Submit manufacturer’s data and installation details for all devices, plates, cable, terminal blocks, patch cords, TVSS, wire management, labels and similar equipment.

B. Submit a copy of certification documents.

C. Any substitution requests must be submitted in writing, and approved by Owner or Owner’s Representative in writing prior to acceptance of bid.

D. Substitution requests may only be made for products equal to or better than as specified in this document. Proof of “equal or better” status is imposed on the contractor, not the Owner.

E. Where a specific manufacturer is called out by name, this is the preferred standard. If substitutions are allowed, they are at the discretion of the Owner and based on performance, suitability, quality, administrational requirements, warranty and other factors deemed important to the Owner.

F. For the purposes of this Specification, “or approved equal” is implied for all specified, named products.

1.6 CONTRACTOR QUALIFICATIONS AND TRAINING:

A. The contractor shall be fully conversant and capable in the cabling of low voltage applications such as, but not limited to data, voice and imaging network systems. The Contractor shall at a minimum possess the following qualifications:

1. Possess those licenses/permits required to perform telecommunications installations in the specified jurisdiction.

2. Provide references of the type of installation detailed in this specification.

3. Personnel trained and certified in fiber optic cabling, splicing, termination and testing techniques. Personnel must have experience using a light meter and OTDR.

4. Personnel trained in the installation of pathways and support for housing horizontal and backbone cabling.

5. Personnel knowledgeable in local, state, province and national codes, and regulations. All work shall comply with the latest revision of the codes or regulations. When conflict exists between local or national codes or regulations, the most stringent codes or regulations shall be followed.

6. Be in business a minimum of five (5) continuous years with a Contractor's license in the state where the project is located, and appropriate for the type of work expected herein.

7. Member in good standing of the Certified Installer network associated with the products listed in this Specification and authorized for use in this Project. Contractor must be a member of this installer program before, during, and through completion of the system installation. Supporting documentation will be required as part of the submittal.

8. Maintain a certified RCDD on staff and utilize certified BICSI Installers for this project.

1.7 WARRANTY:

A. A Limited Lifetime Product & Performance Warranty covering all components, equipment and workmanship shall be provided to the Owner, submitted in writing with system documentation. The warranty period shall begin on the system's first use by the owner.

1. Horizontal channels shall be completed with end to end solutions, such as the Berk-Tek Leviton Technologies Solutions. Factory-terminated copper and/or fiber

optic patch cords from the solutions provider must be used in order to be eligible for the applicable channel performance guarantees.

2. The Contractor must pre-register the project with the Manufacturer before installation has begun. Following project completion, contractor is responsible for completing all warranty registration procedures on behalf of Owner.

3. Should the cabling system fail to perform its expected operation within this warranty period due to inferior or faulty material and/or workmanship, the contractor shall promptly make all required corrections without cost to the owner.

B. Certified Installer shall provide labor, materials, and documentation in accordance with Manufacturer requirements necessary to ensure that the Owner will be furnished with the maximum available Manufacturer's Warranty in force at the time of this project.

C. The installed structured cabling system shall provide a warranty guaranteeing a minimum channel performance above the ANSI/TIA 568-C requirements for all category-rated solutions in this Specification. See Products section for performance criteria. Standards-compliant channel or permanent link performance tests shall be performed in the field with a Manufacturer-approved certification tester in the appropriate channel or permanent link test configuration.

D. Necessary documentation for warranty registration shall be provided to the manufacturer by the installer (within 10 days) following 100 percent testing of cables.

1. Installer shall submit test results to Manufacturer in the certification tester's original software files.

2. Installer shall ensure that the warranty registration is properly submitted, with all required documentation within 10 days of project completion.

3. Certified Contractor/Integrator must adhere to the terms and conditions of the respective manufacturer's warranty programs.

E. Installer shall ensure that the Owner receives the manufacturer issued project warranty certificate within 60 calendar days of warranty registration.

1.8 BACKBONE SUBSYSTEMS:

A. Backbone copper and fiber systems form an interconnected infrastructure between MDF, IDF, and zone enclosures, both inside and between buildings. All cable, connectors, panels and support systems shall be installed and tested by contractor.

B. Typical Fiber backbone will be Singlemode low-water-peak (OS2) fiber optic cable or Laser-Optimized Multimode (OM3) fiber optic cable as noted below and on plan drawings. Singlemode is typically run between buildings and Multimode fiber is run within the building. Singlemode fiber will be terminated on LC connectors using pre-

polished connectors or fusion splice pigtails. Multimode fiber may be terminated on LC connectors using pre-polished connectors or fusion splice pigtails, or may be factory pre-terminated onto MTP multi-fiber connectors.

C. No splicing of cables will be required or allowed between endpoints. Armored cable must be grounded at both ends if run outdoors. With armored fiber, no innerduct will be required. Check plans for clarification or exceptions.

1.9 WORK AREA SUBSYSTEM:

A. The connection between the information outlet and the station equipment in the work area is provided by the Work Area Subsystem. It consists of cords, outlets, adapters, and other filters/impedance matching devices.

1.10 HORIZONTAL SUBSYSTEM:

A. The Horizontal Subsystem is the portion of the telecommunications cabling system that extends from the work area telecommunications outlet/connector to the horizontal cross-connect in the telecommunications room/closet. It consists of the telecommunications outlet/connector, the horizontal cables, optional consolidation point, wireless access point cabling, and that portion of the cross-connect in the telecommunications room/closet serving the horizontal cable. Each floor of a building should be served by its own Horizontal Subsystem.

1.11 ADMINISTRATION SUBSYSTEMS:

A. The Administration Subsystem links the Horizontal Subsystem and the Backbone Subsystem together. It consists of labeling hardware for providing circuit identification and patch cords or cross connect wire used for creating circuit connection at the cross connects.

**PART 2 - PRODUCTS**

2.1 GENERAL:

A. Provide complete raceway, outlet boxes and miscellaneous items as required.

B. Provide minimum 4-$^{11}/_{16}$" square outlet box at each outlet location with single gang plaster or tile ring and 1" conduit to cable tray, backboard, or accessible ceiling or floor space.

C. Provide a complete data cabling and device system as described herein.

2.2 HORIZONTAL CABLING SYSTEMS:

A. NETWORK DATA CABLES

1. Provide 4-pair, 100-Ohm balanced unshielded twisted pair (UTP) Cables for each data outlet designated.

2. All UTP cables passing through air handling space shall be PLENUM-rated (CMP). Cables not passing through air handling spaces may be PVC (CMR) jacketed. Some buildings will require the use of Plenum cable. The contractor is solely responsible for verifying the construction requirements and installing the correct cable. Failure to provide CMP cable in Plenum required spaces will result in the contractor removing and replacing the cable at their own expense.

3. CAT6A UTP cable shall conform to the following requirements:

   a. All cables shall be made in the USA of solid annealed copper conductors, 23 AWG, with four individually twisted pairs in a single round cable sheath.
   b. Characterized to 750 MHz, 250 MHz greater than the standard
   c. Outer diameter 0.300" (7.6mm), CMP
   d. Be made by an ISO 9001 and 14001 Certified Manufacturer.
   e. Channel margin guarantees for ANSI/TIA 568-C.2 CAT6A and ISO/IEC 11801 Class $E_A$ (margin vs. ANSI/TIA-568-C.2 and margin guarantees are for a standard 2-connector channel).

| | | |
|---|---|---|
| Insertion Loss | 3% | |
| NEXT | 2 dB | |
| PSNEXT | 3 dB | |
| ACR-F (ELFEXT) | 5 dB | |
| PSACR-F (PSELFEXT) | | 6 dB |
| Return Loss | 1 dB | |
| ACR-N | 4 dB | |
| PSACR-N | 5 dB | |

Approved Products:

Berk-Tek BLUE LANmark 10G2 Category 6A CMP cable #10130484 (1000’ reel)

Berk-Tek BLUE LANmark 10G2 Category 6A CMR cable #10133700 (1000’ reel)

* Other colors as appropriate

B. DATA INFORMATION OUTLETS:

1. COPPER PATCH PANELS

   a. Integrated 110-style patch panels shall exceed requirements for Category 6A described in ANSI/TIA-568-C.2 and Class $E_A$ and Class E component

requirements (respectively) as described in ISO/IEC 11801 in a typical standard-density (48 ports per 2RU) configuration.

b. Integrated 110-style patch panels shall be available in flat or angled styles, 24 ports per RU in an un-staggered horizontal layout.
c. Modular (unloaded) patch panels shall accept the same Universal jacks as are used at the workstation area outlets. No special "panel jacks" shall be required.
d. Modular patch panels shall be available in flat, angled, Recessed and recessed angled varieties, in 1RU 24 and 48-port versions or 2RU 48 and 72-port configurations.
e. Patch panels shall be sized to fit an EIA standard, 19 inch relay rack, and made of 16-gauge steel and powder-coated black with white silkscreened lettering.

Approved Product examples:

Leviton CAT6A 110-style Flat 1RU 24-port Patch Panel, # 6A586-U24
Leviton CAT6A 110-style Angled 2RU 48-port Patch Panel, # 6A9587-U48
Leviton QuickPort® 1RU Flat 48-port Patch Panel, # 49255-Q48

2. CAT6A JACKS: Provide modular type Category 6A information outlets for 23-AWG copper cable. These Category 6A (CAT6A) connectors shall be individual snap-in style, and exceed compliance with TIA/EIA-568-C.2 specifications. The connectors shall comply with the following:

a. Be 8-position/ 8 conductor (8P8C, RJ45-style) modular jacks.
b. Utilize a universal Keystone-style insertion footprint as the manufacturer's main "flagship" line of products.
c. Comply with FCC Part 68; UL listed and CSA Certified. Verified to exceed all channel performance requirements in TIA-568-B.2-10 from 1 MHz to 500MHz to support the IEEE 802.an standard for 10 Gigabit Ethernet over UTP Cable.
d. Each 10G connector is to feature an injection molded Cone of Silence™ technology to eliminate alien crosstalk (AXT).
e. Every 10G connector to include polymer springs above the tines ("Retention Force Technology" or similar functionality) to promote return of tines to original position and protect against deformation due to stress of patch cords or inappropriate materials insertion
f. Connector shall have Pair Separation Towers on IDC to facilitate quick, easy terminations without a complete untwist of each pair of conductors.
g. The connector shall be rear 110-type insulation displacement connectors (IDC) with solder-plated phosphor bronze contacts, configured in a 180° orientation such that the punch down field is in the back, allowing for rear termination.

h. The connector shall provide a ledge directly adjacent to the 110-style termination against which the wires can be directly terminated and cut in one action by the installation craftsperson.
i. Connector wiring label shall provide installation color codes for both T568A and T568B wiring schemes on separate labels.

Approved Products:
Leviton eXtreme CAT6A QuickPort Module # 6110G-R*6

Where * = one of 13 colors. See drawings or check with Owner for application.

3. FACEPLATES: Faceplates provide information outlets to the work area. Contractor shall provide and install single gang faceplate kits to allow up to six data or voice jacks as required for all work area outlets, workstation base feeds, and unused telecom backboxes and furniture openings. Faceplates shall:
a. Utilize a Quickport ("keystone"-style) footprint to match the approved connectivity manufacturer, and be made by the same manufacturer as the connectors.
b. Match colors and materials of the power wiring device plates.
c. Support any connectivity media type, including fiber and copper applications.
d. Have write-on designation labels for circuit identification together with a clear plastic cover.
e. Be available in single-gang and double-gang configurations.
f. Have surface-mount boxes and standoff rings available for both single and double gang faceplates.
g. Have single-port matching color blank inserts available in packs of 10.
h. Shall be stainless steel when installed above accessible ceiling.

Approved Products:
Leviton QuickPort Single-Gang, Plain, # 41080-#xP
Leviton QuickPort Single-Gang with ID Windows, # 42080-#xS
Leviton QuickPort Blank Inserts, pack of 10, # 41084-BxB
Leviton QuickPort Stainless Steel wallphone plate, # 4108W-0SP

Where:
# = number of ports: 1, 2, 3, 4, 6
x = color: White (W), Ivory (I), Light Almond (T), Gray (G), Black (E)

## 2.3 BACKBONE CABLING SYSTEMS

### A. BACKBONE CABLES:

1. GENERAL

a. The cable route within a building, connecting closet to closet or closet to the equipment room is the Intrabuilding Backbone Subsystem. It links the Main Distribution Frame (MDF) in the equipment room to Intermediate Distribution Frame (IDF) and Horizontal Cross-connects (HC) in the Telecommunications Room/Closets (TC). It consists of the backbone transmission media between these locations and the associated connecting hardware terminating this media. These fiber optic cables are typically Multimode.

b. Cables run from building to building in a campus, or from campus to campus are part of the Interbuilding Backbone System. It consists of the backbone transmission media between these locations and the associated connecting hardware terminating these media. These fiber optic cables are typically Singlemode.

c. Cables allowed for use in the backbone shall support voice, data, video, wireless and building infrastructure applications. The bending radius and pulling strength requirements of all backbone cables shall be observed during handling and installation. All cables shall conform to ANSI/TIA/EIA-568-C Commercial Building Telecommunications Cabling Standard. These cables include:

1) 4-pair 100-ohm unshielded twisted-pair 100% annealed-copper solid-conductor cables, 100-ohm UTP multi-pair copper cables
2) 50/125$\mu$m (micron) Laser-Optimized Multi-Mode Fiber (LOMMF) cables (OM3 or better)
3) 8.3$\mu$m low-water peak singlemode optical fiber cables compliant with ITU-T G.652D (OS2).

2. VOICE COPPER BACKBONE CABLE

a. Power-Sum Multi-Pair Category 3 cable, 24 AWG solid-copper conductors in 25-pair binder groups to support 10BASE-T, 100BASE-T and Analog Voice communications at 16Mhz.

Approved Products:
Berk-Tek # 10032111, 25-pr CMP, Gray.
Berk-Tek # 10032396, 25-pr CMR, Gray
Other multiples of 25 acceptable (50, 100, 200, 300 pair as required)

B. COPPER TERMINATION BLOCKS

1. Provide termination blocks for Category 3 Backbone Cabling Systems that support up to Category 5e applications and facilitate cross-connection using twisted pair wiring.

2. The connecting hardware block shall support the appropriate Category 3 to 5e voice (non-VOIP) applications and facilitate cross-connection and/or inter-connection using cross-connect wire. The cross-connect hardware shall be of 66-type (telephone) AND:

3. The cross-connect shall be Category 5e 110-style wiring bases, mountable to wall or backboard to provide 110 termination capable of supporting voice, security, and Category 5e data applications, including high megabit and shared-sheath applications when used with Category 5e rated cabling.

4. The components shall be UL listed and ANSI/TIA-568-C compliant. Bases shall support 50, 100 or 300 pair densities with provision for ANSI/TIA-606-B compliant labeling. Plastic bases and blocks shall be made of fire-retardant plastic rated UL 94V-0.

5. Cross-connect blocks shall be available in a variety of insulation displacement clips (IDC) with and without tails, and support wire sizes: Solid: Wire Ranges 22-26 AWG (0.64mm - 0.40mm).

   Approved Products:
   Leviton 110 Connecting Block, 100-pair w/legs # 41AW2-100
   Leviton Wire Manager w/legs, # 41A10-HCM

6. SPLICE TRAYS AND CASSETTES

   a. Fiber splice trays shall mount to rear of enclosure for terminating bulk fiber optic cable to factory terminated fiber optic pigtails.

      1) Splice trays shall be offered in mini and high density versions with removable clear covers for viewing and inspection of fibers.
      2) Incoming fiber shall be secured utilizing a ratchet action foam rubber padding clamp feature or tie-down points to minimize crushing of fiber.
      3) The trays shall accommodate slack management of both single-mode and multimode 250 or 900µm fiber and protection of (up to) 12 or 24 fiber heat shrink style fusion splices.
      4) Heat shrink splice sleeves shall be included. Splice tray shall be made by the fiber enclosure manufacturer.

   b. Fiber pigtail fusion splice modules shall mount to front of fiber enclosure for terminating bulk fiber optic cable to factory terminated fiber optic pigtails, and shall be front-removable.

      1) Splice Modules shall be offered in 12- or 24-fiber LC for OS2 (Singlemode) and OM3 (Multimode) fiber types. Construction of module shall be of 14-gauge aluminum for robustness and light weight.

2) Splice Modules shall be pre-loaded and routed with respective 3-meter, color-coded, 12-strand pigtail assembly.
3) Individual pigtails shall have maximum insertion loss of 0.4 dB and 0.35 dB for OM3 and OS2 fiber types, respectively. Return Loss shall be greater than 25 dB (for OM3), 55 dB (for OS2/UPC), and 60 dB (for OS2/APC).
4) Individual compartments in splice module shall provide slack storage and bend radius protection for incoming backbone fibers, 900 µm tight-buffer fibers, and fusion-spliced fibers. Incoming 250 µm backbone fibers shall be protected by an included braided mesh sleeve. Heat shrink style splice sleeves and tie wraps shall also be included with module.

Approved Products:

Leviton Mini Splice Tray, 12-strand # T5PLS-12F
Leviton High-Density Mini Splice Tray, 24-strand # T5PLS-24F
Leviton LC 12-Fiber pigtail kit, OS2, #UPPLC-KIT
Leviton LC 12-Fiber pigtail kit, OM3, #5LPLC-KIT
Or
Leviton Opt-X 12-Fiber LC OS2 Splice Module # SPLCS-12L
Leviton Opt-X 24-Fiber LC OS2 Splice Module # SPLCS-24L
Leviton Opt-X 12-Fiber LC OM3 Splice Module # SPLCS-12A
Leviton Opt-X 24-Fiber LC OM3 Splice Module # SPLCS-24A

C. COPPER AND FIBER OPTIC PATCH CORDS

1. CAT6A PATCH CORDS

a. Provide factory terminated and tested patch cords from the manufacturer of the structured cabling components. Patch cords must meet or exceed all criteria specified in the horizontal cabling standard subsection above.
b. Copper patch cords shall exhibit the following characteristics:
1) Slimline, integrated snag-less plug design without incorporating the use of a rubber molded boot.
2) A narrow profile for less congestion in higher density applications and a strain relief boot ensures long-term network performance
3) Copper Category 6A patch cords shall be Component-rated per TIA 568-C.2-10 for CAT 6 and CAT6A component performance and Independently tested and verified by Intertek (ETL).
4) Outside diameter of 0.225” (CAT6) or 0.240” (CAT6A).
5) 26 AWG stranded conductors for maximum flexibility
6) CAT6A cord complies with TIA 568-C.2-10 component requirements for connecting hardware from 1 MHz to 500 MHz, ISO 11801 Class $E_A$, IEEE 802.3an to support 10GBASE-T networks and cULus listed.
7) Available Lengths: 3', 5', 7', 10', 15', or 20'

c. Provide factory assembled patch cords meeting or exceeding all criteria specified in the horizontal cabling standard subsection above, in the following quantities:

1) (1) 10’ CAT 6A patch cable per outlet location/faceplate (drop) for use at the workstation.
2) (1) 5’ (average) CAT 6A patch cable per outlet location/faceplate (drop) for use at the network switch in the MDF and IDF.
3) (1) 3’ CAT 6A patch cable per outlet location/faceplate (drop) for use at wireless access points.

Approved Products:
Leviton Slimline CAT6A Component-rated Patch Cord, #6AS10-xx*
Leviton Slimline CAT6 Patch Cord, # 6D460-xx*

Where:
xx = Length in Feet
* = color: White (W), Yellow (Y), Red (R), Blue (L), Green (G), Grey (S), Black (E)

D. WIRE MANAGEMENT

1. Provide wiring spindles and channels as necessary to allow neat bundling of all wire and cable on backboard. Provide wiring channel (horizontal) above and/or below each termination block or patch panel, or on the side (vertical) as appropriate. Provide wiring channels by same manufacturer of termination blocks or patch panels. Provide nylon or Velcro type ties for all cables at telephone backboard not run in conduit or channels.

2. Provide 1RU ring-style horizontal wire managers between every 2 patch panels as space allows. Provide 2RU horizontal wire manager between the Orange and Blue sets of patch panels if in the same rack, and above and below each similarly-apportioned bank of patch panels.

a. Cable managers shall be flat, open ring style.
b. Do not coil or wind patch cords inside ring-style wire managers.
c. Use recessed flat wire manager as needed within enclosed cabinets to route patch cords to opposite sides, where the rings of the flat wire managers would interfere with cabinet door closure.

Approved Products:
Leviton Horizontal manager, 1RU, # 49253-LPM
Leviton Horizontal manager, 2RU, # 49253-BCM
Leviton Recessed Flat Horizontal manager, 1RU, # 49253-RCM

3. Provide full height, front-and-rear, 8” wide Vertical Wire Managers at the side of and between each 2-post and/or 4-post termination rack or frame. If space will not allow, the 5” wide wire manager may be substituted at row ends only, leaving the 8” vertical wire manager between each rack. Owner approval in writing is required prior to this substitution.
   a. The vertical cable management system shall be cULus listed, PCI rated for 94V-O, ABS rated for UL94HB, and compliant with ANSI/TIA/EIA 568-B standards.
   b. Mounting hardware shall be included to insure the proper installation to infrastructure. It shall mount onto a standard TIA/EIA recognized equipment rack.
   c. The management system shall offer an assortment of accessories, including a bend radius slack loop organizer, cable retainers, and shall accommodate top, bottom, side and pass-through cable routing. Dual hinged, cable concealing covers shall be included.

Approved Products:
Leviton Vertical 80"L x 8"W x 8"D channel, black cover, #8980L-VFR

4. For enclosed cabinets, provide horizontal wire management as specified above and vertical or integrated vertical wire management as described below, pertinent to the cabinet manufacturer.

E. Power Distribution Units (PDU)

1. Provide (2) vertical PDU per rack or wall cabinet. Unswitched, non-surge suppressed. 30” length for wall cabinets and 48” for floor-mounted cabinets.
2. Utilize plug and receptacle style appropriate for installation circuits and equipment interfaces.

Approved Products
Leviton P1000 series # P1042-10L
Leviton P1000 series # P1044-10L

F. LABELING:

A. The contractor shall provide tags, straps, and adhesive labels. These tags, straps, and adhesive labels shall be of high quality that will endure heat, water, and time.

B. Shall meet the legibility, defacement, exposure, and adhesion requirements of UL 969.

C. Shall be pre-printed using a mechanical means of printing.

D. Where used for cable marking, provide vinyl substrate with a white printing area and a clear “tail” that self laminates the printed area when wrapped around the

cable. The cable marking shall be immediately visible and within two inches from termination point.

E. Where insert type labels are used, provide clear plastic cover over label.

F. Copper patch panel labeling shall be completed with adhesive labeling kit specifically designed for the panel, Leviton 49257-QHD.

G. Labeling P-touch font size 4MM bold, black on White, 3/8" labeling tape on all work stations, panels and devices.

H. A round Avery label green in color Product Number: 5463 and a station label utilizing the same font size as on work station face plate must be installed on ceiling grid below each wireless cable location for identification. See type "D" Wireless Location Detail.

I. Labels shall be numbered consecutively and separate for each type of use. Refer to Work Station Details for additional information.

J. The contractor shall develop and submit for approval a labeling scheme for the cable installation. The Owner will negotiate an appropriate labeling scheme with the successful contractor. At a minimum, the labeling system shall clearly identify all components of the system: racks, cables, panels and outlets. The labeling system shall designate the cables origin and destination and a unique identifier for the cable within the system. Racks and patch panels shall be labeled to identify the location within the cable system infrastructure. All labeling information shall be recorded on the as-built drawings and all test documents shall reflect the appropriate labeling scheme. Labeling shall conform to the owner's Labeling Grammar and the TIA/EIA-606A standard.

## PART 3 - EXECUTION

### 3.1 INSTALLATION OF TELEPHONE/DATA SYSTEM:

A. Install raceway and cable system and specified equipment as indicated to comply with NEC and recognized industry practices.

B. PRE-INSTALLATION CONFERENCE:

1. Schedule a conference a minimum of five calendar days prior to beginning work of this section.

2. Agenda: Clarify questions related to work to be performed, scheduling, coordination, etc.

3. Attendance: Communications system installer, General Contractor, Owners Representatives and any additional parties affected by work of this section.

4. Copy of Manufacturer warranty pre-application, RCDD qualifications, and other material not include in submittals will be provided by Contractor at this time.

C. WARRANTY:

1. A lifetime performance warranty covering all components, equipment and workmanship shall be submitted in writing with system documentation. The warranty period shall begin on the systems first use by the Owner.

2. The project must be pre-registered with Manufacturer before installation has begun.

3. Should the cabling system fail to perform within its expected operation within this warranty period due to inferior or faulty material and/or workmanship, the Contractor shall promptly make all required corrections without cost to Owner.

D. PATHWAYS AND TOPOLOGY:

1. Prior to placing any cable pathways or cable, the contractor shall survey the site to determine job conditions will not impose any obstructions that would interfere with the safe and satisfactory placement of the cables. The arrangements to remove any obstructions with the Project Manager need to be determined at that time.

2. Provide NEC-sized pullboxes for any run greater than 100 feet, or with more than two ninety-degree bends.

3. Maintain a distance of at least 12 inches from all power conduits and cables, and 6 inches from all fluorescent lighting fixtures. Do not install power feeders 100 amps or greater above or within 5 feet of telecommunications backboard. Do not install telecommunications conduits above power panels or switchboards.

4. The backbone subsystem shall include cable installed in a vertical manner between floor telecommunications room/closets (TCs or IDFs) and the main or intermediate cross-connect in a multi-story building and cable installed horizontally between telecommunications room/closets and the main or intermediate cross-connect in a long single story building.

5. Unless otherwise recommended by the Owner, all fiber cables will be encased in interlocking armor. All fibers will be terminated in the Telecom Rooms or Cabinets in new fiber enclosures equipped with sufficient ports, slack storage space and splice trays if required to terminate and secure all fibers.

6. Adequate riser sleeve/slot space shall be available with the ability to ingress the area at a later date in all Telecommunications rooms/closets, such that no drilling of additional sleeves/slots is necessary.

7. The backbone cables shall be installed in a star topology, emanating from the main cross-connect to each telecommunications room/closet. An intermediate cross-connect may be present between the main cross-connect and the horizontal cross-connect. This is known as a hierarchical star topology.

8. Backbone pathways shall be installed or selected such that the minimum bend radius of backbone cables is kept within manufacturer specifications both during and after installation.
9. Do not run fiber cables in conduits which are less than 2" in diameter.

10. All horizontal cables, regardless of media type, shall not exceed 90 m (295 ft) from the telecommunications outlets in the work area to the horizontal cross connect.

11. The combined length of jumpers, or patch cords and equipment cables in the telecommunications room/closet and the work area shall not exceed 10m (33 ft).

12. Horizontal pathways shall be installed or selected such that the minimum bend radius of horizontal cables is kept within manufacturer specifications both during and after installation.

13. For voice or data applications, 4-pair UTP or fiber optic cables shall be run using a star topology from the telecommunications room/closet serving that floor to every individual information outlet.

14. The Contractor shall observe the bending radius and pulling strength requirements of the 4-pair UTP and fiber optic cable during handling and installation.

15. Each run of UTP cable between horizontal portions of the cross-connect in the telecommunication closet and the information outlet shall not contain splices.

16. In a false ceiling environment, a minimum of 3 inches (75 mm) shall be observed between the cable supports and the false ceiling.

17. All horizontal pathways shall be designed, installed and grounded to meet applicable local and national building and electrical codes.

18. J-hooks shall be provided for all suspended cable, at a semi-irregular spacing not to exceed 5 feet between supports.

19. Install ¾” x 4’ x 8’ fire-rated plywood across all walls in telecom rooms, from 6” AFF to 8’-6” AFF. Coat with 2 coats of white paint. Do not paint over fire rating stamp.

20. Contractor shall firestop all used pathways which enter or leave the telecom rooms via conduit, cable tray or slot. Contractor is responsible for installing sleeves at each wall or partition penetration, and firestopping all fire-rated penetrations. Intumescent caulk shall be applied around the outside of each sleeve, and intumescent putty inside the sleeve or conduits around the cables. Appropriate fill ratios must be followed when penetrating fire rated walls.

E. GROUNDING:

1. All grounding / earthing and bonding shall be done to applicable codes, standards and regulations.

2. Telecom Contractor shall bond and ground all telecom room metals. Telecom Contractor shall provide and install TIA-rated Telecommunications Grounding Busbar (TGB) at all MDF and IDF locations, and an in-cabinet grounding busbar at each remote wall-mounted cabinet or telecom enclosure. All ground lugs shall be 2-hole make-up.

3. Electrician will provide connection between TGB and building ground; Telecom contractor (if separate, otherwise electrician) will provide a busbar and ground all equipment and telecom metals to the busbar.

4. Telecom installer will ground and bond all armored and/or shielded cables, racks, cabinets, cable tray, ladder racking, and shielded panels to telecom grounding busbar.

5. All grounding and bonding conductors shall be copper and may be insulated. When conductors are insulated, the sheath shall be green or marked with a distinctive green color, and shall be listed for the application. The minimum bonding conductor size shall be #6 AWG.

6. The Telecommunications Ground Busbar (TGB) shall be dedicated and pre-drilled copper busbar provided with holes for use with standard sized lugs. This busbar shall have minimum dimensions of .25 inch thick, 4 inches wide, and be variable in length.

7. Two-hole compression ground lugs shall be Chatsworth 40162-901, 40162-904, 40162-909, and 40162-911, or equal, based on the size of the copper conductor to be terminated.

8. All low voltage systems in this project shall be grounded and bonded.

F. CABLES AND TERMINATIONS:

1. Check plans and symbology for final determination of faceplate constitution or consult with Owner prior to bid.

2. Install additional cables as indicated on the drawings. Do not exceed manufacturers' recommendations for maximum allowable pulling tension, side wall pressure or minimum bending radius. Use pulling compound as recommended by cabling manufacturer.

3. Install CAT6A cables for Wireless Access Points and cameras, and CAT6 everywhere else unless otherwise noted.

4. Provide a full-size service loop (at least once around the inside edge of the box) in each J-box in the communications system.
5. Install all cable in plenum spaces with J-hooks of at least 1" in width to disperse the weight on the bottom cables. Homerun all cable to nearest TR Cabinet.

6. Coordinate with EIA/TIA 569 tables 4.4-1 and 4.4-2 for conduit and splice box sizing.

7. Install modular jacks at all outlets shown; one data jack for each data cable at each faceplate or termination point. Install additional cables and modular jacks as indicated on the drawings.

8. Terminate cables at each jack location and at termination board or patch panel. Follow industry guidelines and manufacturers' recommendations and procedures as required. All termination hardware shall be rated to exceed Category 6 specifications as specified above.

9. Label and identify each outlet and cable for data circuits. Label at outlet end and at termination board or patch panel with matching designations.

10. Provide data outlets in surface raceway at 26" on center unless otherwise indicated.

3.2 TERMINAL BLOCKS AND PATCH PANELS:

A. Arrange all terminal blocks in a manner that allows natural wiring progression and minimizes crossing of wires.

3.3 PATCH CORDS:

A. Contractor to provide fiber and copper patch cords in quantities as described as outlined above in section 2.4.G. Neatly install (minimum) one 3', 5' or 7' CAT6 or CAT6A patch cord (as appropriate to reduce unnecessary length in wire managers) at the equipment cabinet between patch panel and owner-provided switches for each

classroom and computer location. Dress and bundle patch cords as appropriate for final installation. Provide unused patch cables to Owner upon completion of project.

B. Patch cables and fiber optic jumpers must be supplied and installed by the vendor for all terminated data drops, between network switches, building hubs, etc. so that building-wide networking will be operational once all installation is complete.

C. All fiber patch cords and required workstation/equipment patch cords not installed shall be provided in hand to Owners Representative prior to project closeout.

3.4 LABELING:

A. Provide labels appropriate for all components supplied and installed.

B. Each faceplate, cable or data outlet (drop) will be numbered with a unique identifier based on coordination with Owner prior to labeling. Contractor must present labeling system for approval, with all shop drawings, prior to start of construction.

3.5 TESTING:

A. Test all equipment and each outlet, horizontal cable, termination block, patch cords, etc. to verify compliance with requirements. Testing shall consist of attenuation and NEXT across all splices and devices installed in the field and shall meet latest requirements of EIA/TIA. Re-terminate any cable or connection found to be defective.

B. Tester is to be configured with the specific cable installed, and the Permanent Link test will be performed according to the CAT6A standard methodology. All parameters must exhibit a PASS test result prior to project completion. PASS*, FAIL* or FAIL test results will not be accepted.

C. Repair and resolve any shortcomings in the test results. Mitigation efforts may require re-termination or replacement of the jack, outlet or cable. Repairs or attempts to resolve test failures will be completed solely at the expense of the Contractor.

D. Provide test results to Manufacturer and Owner representative in native Tester format. Upon request, provide a copy of the tester software and license, if needed, at no charge to Owner representative.

E. Include PDF of full test results, summary index in electronic format on CD or memory stick in the O&M package upon project completion.

Approved Tester Products:

Fluke DTX or VERSIV platform Cable Certification testers
Linkware Record Management Software

3.6 PROJECT CLOSEOUT:

A. Operating and maintenance manuals shall be submitted prior to testing of the system. A total of (4) manuals shall be delivered to the Owner. Manuals shall include all service, installation, and programming information.

B. Provide a full set of "as-built" (redline) drawings in AutoCAD DWG and PDF format. Drawings to depict final location and drop/cable identification numbers and labels which match the test reports. Include (1) hard copy paper format of all as-builts in 30"x42" size or equivalent.

C. Contractor to provide all warranty information to Leviton for processing. Leviton will send warranty document direct to Owner.

3.7 TRAINING:

A. Provide four (8) hours training on the operation and installation of the data system, at job site, at no cost to owner.

END OF SECTION

# Division 31:
# Earthwork

# SECTION 311000 - SITE CLEARING

## 1.00 - GENERAL

1.01 SECTION INCLUDES

A. Remove surface debris.

B. Clear site of plant life and grass.

1.02 RELATED SECTIONS

A. Section 312213 - Rough Grading.

1.03 UNIT PRICE - MEASUREMENT AND PAYMENT

Not Used.

1.04 REGULATORY REQUIREMENTS

A. Conform to applicable code for disposal of debris, burning debris on site, use of herbicides and Conditions of Approval.

B. Coordinate clearing Work with utility companies.

## 2.00 - PRODUCTS

2.01 MATERIALS

Not Used.

## 3.00 - EXECUTION

3.01 PREPARATION

A. Verify that existing plant life designated to remain, is protected per conditions of approval.

3.02 PROTECTION

A. Locate, identify, and protect utilities that remain, from damage. Contractor will be responsible for any damage to existing utilities or improvements.

B. Protect trees, plant growth, and features designated to remain, as final landscaping.

C. Protect bench marks and existing structures from damage or displacement.

3.03 CLEARING

- A. Clear areas required for access to site and execution of work.

B. Remove curbs, gutter, and sidewalks as indicated on civil drawings.

C. Remove trees and shrubs indicated. Remove stumps, roots as directed by Geotechnical Consultant.

3.04 REMOVAL

A. Remove debris, rock, and extracted plant life from site.

**END OF SECTION**

# SECTION 312213 - ROUGH GRADING

## 1.00 - GENERAL

1.01 SECTION INCLUDES

A. Removal of topsoil and subsoil.

B. Cutting, grading, filling and rough contouring the site for site structures, building pads and landscaping.

1.02 RELATED SECTIONS

A. Geotechnical report

B. Section 311000 - Site Clearing.

C. Section 312316 - Excavating: Building excavation.

D. Section 312333- Backfilling: General building area backfilling.

1.03 UNIT PRICE - MEASUREMENT AND PAYMENT

Not Used.

1.04 REFERENCES

A. Refer to Civil Drawing and Geotechnical report.

1.05 PROJECT RECORD DOCUMENTS

Not Used.

## 2.00 - PRODUCTS

2.01 MATERIALS

Not Used.

## 3.00 - EXECUTION

3.01 EXAMINATION

A. Verify site conditions

B. Verify that survey bench mark and intended elevations for the Work are as indicated.

- C. It shall be the contractors responsibility to verify the quantity of cuts and fill. Any excess or shortage will be the contractors responsibility and no extra compensation will be due.

3.02 PREPARATION

A. Identify required lines, levels, contours, and datum.

B. Stake and flag locations of known utilities.

C. Locate, identify, and protect utilities that remain, from damage.

D. Notify utility company to remove and relocate utilities.

E. Protect above and below grade utilities that remain.

F. Protect plant life, lawns, and other features remaining as a portion of final landscaping.

F. Protect bench marks, sidewalks, paving, and curbs from excavating equipment and vehicular traffic.

3.03 SUBSOIL EXCAVATION

A. Excavate subsoil from areas to be further excavated, re-landscaped, or re-graded.

B Stockpile in area designated on site to depth not exceeding 8 feet . Protect from erosion. Remove subsoil not being reused, from site.

C. Do not excavate wet subsoil.

D. When excavating through roots, perform work by hand and cut roots with sharp axe.

3.04 FILLING

A. Fill areas to contours and elevations with material recommended in Geotechnical report.

B. Make grade changes gradual. Blend slope into level areas.

C. Remove surplus fill materials from site.

D. Where compacted building pad projects more than 3 feet from building face, remove and replace compacted material to a minimum 18 inches depth with approved planting soil. If the building pad is lime treated, remove lime treated pad full depth where it occurs more than 3 feet from building face.

E. Place fill materials on continuous layers and compact in accordance with Civil Drawings and Geotechnical report.

F. Maintain optimum moisture content of fill materials to attain required compaction density. To be supervised and approved by the Geotechnical Engineer.

G. Slope grade away from building minimum 1/4 inches in 1 ft, unless noted otherwise.

3.05 TOLERANCES

A. Top Surface of Subgrade: Plus or minus 1/10 foot.

3.06 FIELD QUALITY CONTROL

A. Field inspection and testing will be performed.

B. Compaction testing will be performed in accordance with ANSI/ASTM D1557.

C. If tests indicate Work does not meet specified requirements, remove Work, replace and retest.

D. Frequency of Tests: As directed by Architect/Engineer.

**END OF SECTION**

# SECTION 312316 - EXCAVATION

## 1.00 - GENERAL

1.01 SECTION INCLUDES

A. Excavating for building foundations.

B. Excavating for slabs-on-grade, paving and landscaping.

C. Excavating for site structures.

1.02 RELATED SECTIONS

A. Geotechnical report.

B. Section 312213 - Rough Grading: Topsoil and subsoil removal from site surface

C. Section 312333 - Backfilling

1.03 UNIT PRICE - MEASUREMENT AND PAYMENT

Not Used.

1.04 FIELD MEASUREMENTS

A. Verify that survey bench mark and intended elevations for the Work are as indicated.

## 2.00 - PRODUCTS

Not Used.

## 3.00 - EXECUTION

3.01 PREPARATION

A. Identify required lines, levels, contours, and datum.

B. Locate, identify, and protect utilities that remain, from damage.

C. Notify utility company to remove and relocate utilities.

D Protect plant life, lawns and other features remaining as a portion of final landscaping.

E. Protect bench marks, sidewalks, paving, and curbs from excavation equipment and vehicular traffic.

3.02 EXCAVATION

A. Excavate subsoil required to accommodate building foundations, slabs-on-grade, paving and construction operations.

B. Do not interfere with bearing splay of foundation as indicated in Geotechnical report.

C. Grade top perimeter of excavation to prevent surface water from draining into excavation.

D. Hand trim excavation. Remove loose matter.

E. Remove lumped subsoil, boulders, and rock up to 1/3 cu yd measured by volume.

- F. Notify Architect/Engineer of unexpected subsurface conditions and discontinue affected Work in area until notified to resume work.

G. Correct areas over-excavated in accordance with Section 312333

- H. Stockpile excavated material in area designated on site and remove excess material not being reused, from site.

3.03 FIELD QUALITY CONTROL

A. Field inspection will be performed

B. Provide for visual inspection of bearing surfaces.

3.04 PROTECTION

A. Protect excavations by methods required to prevent cave-in or loose soil from falling into excavation.

**END OF SECTION**

# SECTION 312317 - TRENCHING

## 1.00 - GENERAL

1.01 SECTION INCLUDES

A. Excavating trenches for utilities from 5 feet (1.5 m) outside building to municipal utilities.

B. Compacted fill from top of utility bedding to subgrade elevations.

C. Backfilling and compaction.

1.02 RELATED SECTIONS

A. Section 312213 - Rough Grading: Topsoil and subsoil removal from site surface.

B. Section 312316 - Excavating: General building excavation.

C. Section 312333 - Backfilling: General backfilling.

1.03 UNIT PRICE - MEASUREMENT AND PAYMENT

Not Used.

1.04 REFERENCES

A. Refer to Geotechnical report.

B. City Standards.

1.05 DEFINITIONS

A. Utility: Any buried pipe, conduit, or cable.

1.06 FIELD MEASUREMENTS

- A. Verify that survey bench mark and intended elevations for the Work are as shown on drawings.

1.07 COORDINATION

- A. Verify work associated with lower elevation utilities are complete before placing higher elevation utilities.

**2.00 - PRODUCTS**

2.01 FILL MATERIALS

A. Per Geotechnical report.

2.02 ACCESSORIES

A. Geotextile Fabric: Per Geotechnical report.

B. Filter Fabric: Per Geotechnical report.

**3.00 - EXECUTION**

3.01 PREPARATION

A. Identify required lines, levels, contours, and datum.

B. Protect plant life, lawns, and other features remaining as a portion of final landscaping.

- C. Protect bench marks, existing structures, fences, sidewalks, paving, and curbs from excavation equipment and vehicular traffic.

D. Maintain and protect above and below grade utilities which are to remain.

E. Cut out soft areas of subgrade not capable of in situ compaction. Backfill with fill per Geotechnical report and compact to density equal to or greater than requirements for subsequent backfill material.

3.02 EXCAVATION

A. Excavate subsoil required for utilities to municipal utilities.

B. Cut trenches sufficiently wide to enable installation and allow inspection.

C. Do not interfere with 45 degree bearing splay of foundations.

- D. Hand trim excavation. Hand trim for bell and spigot pipe joints. Remove loose matter.

- E. Remove lumped subsoil, boulders, and rock up to 1/3 cu yd (0.25 cu m), measured by volume.

- F. Correct areas over excavated in accordance with Section 312316.

- G. Stockpile excavated material in area designated on site and remove excess material not being used, from site.

3.03 BACKFILLING

A. Backfill trenches to contours and elevations with materials recommended in Soil Report and City Standards.

B. Systematically backfill to allow maximum time for natural settlement. Do not backfill over porous, wet, frozen or spongy subgrade surfaces.

C. Place geotextile fabric as recommended by Geotechnical report, prior to placing next lift of fill.

D. Granular Fill: Place and compact materials in continuous layers not exceeding 6 inches (150 mm) compacted depth.

E. Fill: Place and compact material in continuous layers not exceeding 8 inches (200 compacted depth.

F. Employ a placement method that does not disturb or damage foundation perimeter rainage, conduit, duct in trench.

G. Maintain optimum moisture content of fill materials to attain required compaction density.

H. IRemove surplus fill materials from site.

I. Leave fill material stockpile areas completely free of excess fill materials.

3.04 TOLERANCES

A. Top Surface of Backfilling Under Paved Areas: Plus or minus 1 inch (25 mm) from required elevations.

B. Top Surface of General Backfilling: Plus or minus 1 inch (25 mm) from required elevations.

**3.05 FIELD QUALITY CONTROL**

A. Field inspection and testing will be performed.

B. Compaction testing will be performed in accordance with Geotechnical report.

A. If tests indicate Work does not meet specified requirements, remove Work, replace, compact, and retest.

B. Frequency of Tests: Per Soils Engineer.

3.06 PROTECTION OF FINISHED WORK

A. Reshape and re-compact fills subjected to vehicular traffic during construction.

**END OF SECTION**

# SECTION 312333 - BACKFILL

## 1.00 - GENERAL

1.01 SECTION INCLUDES

A. Building perimeter and site structure backfilling to subgrade elevations.

B. Site filling and backfilling.

C. Fill under slabs-on-grade, paving.

D. Consolidation and compaction as scheduled.

E. Fill for over-excavation.

1.02 RELATED SECTIONS

A. Geotechnical report.

B. Section 312316 - Excavating.

1.03 REFERENCES

A. Refer to Civil Drawings and Geotechnical report.

## 2.00 - PRODUCTS

2.01 FILL MATERIALS

A. Refer to Civil Drawings and Geotechnical report.

2.02 ACCESSORIES

A. Vapor Retardant: 6 mil thick, polyethylene.

## 3.00 - EXECUTION

3.01 EXAMINATION

A. Verify subdrainage, dampproofing or waterproofing installation has been inspected.

3.02 PREPARATION

A. Compact subgrade to density requirements for subsequent backfill materials.

B. Cut out soft areas of subgrade not capable of in situcompaction. Backfill with fill and compact to density equal to or greater than requirements for subsequent fill material, per Geotechnical report.

C. Scarify and proof roll subgrade surface to a depth of 12 inch to identify soft spots; fill and compact to density equal to or greater than requirements for subsequent fill material.

## 3.03 BACKFILLING

A. Systematically backfill to allow maximum time for natural settlement. Do not backfill over porous, wet, frozen or spongy subgrade surfaces.

B. Employ a placement method that does not disturb or damage other work.

C. Maintain optimum moisture content of backfill materials to attain required compaction density.

D. Slope grade away from building minimum 1/4 inches in 1 ft, unless noted otherwise.

E. Make gradual grade changes. Blend slope into level areas.

F. Remove surplus backfill materials from site.

G. Leave fill material stockpile areas free of excess fill materials.

## 3.04 TOLERANCES

A. Top Surface of Backfilling: Plus or minus 1 inch from required elevations.

B Top Surface of General Backfilling: Plus or minus 1 inch from required elevations.

## 3.05 FIELD QUALITY CONTROL

A. Field inspection and testing will be performed

B. Compaction testing will be performed in accordance with Geotechnical report.

C. If tests indicate Work does not meet specified requirements, remove Work, replace and retest.

D. Frequency of Tests: As directed by Soils engineer.

E. Proof roll compacted fill surfaces under slabs-on-grade and paving.

3.06 PROTECTION OF FINISHED WORK

A. Reshape and re-compact fills subjected to vehicular traffic.

**END OF SECTION**

# Division 32: Exterior Improvements

# SECTION 321123 – AGGREGATE BASE COURSE

## 1.0 GENERAL

### 1.1 SUMMARY

A. This Section includes all labor, materials, equipment, operations, or methods listed, mentioned or scheduled on the plans and/or herein specified, including all incidentals necessary and required for completion of work under this Section.

B. Provide and install aggregate base course as indicated on project Drawings and as specified herein.

### 1.2 RELATED SECTIONS

A. Documents affecting work of this Section include, but are not necessarily limited to, General Conditions, Special Conditions and Division 1 of these Contract Documents.

B. Division 03 – Concrete, all sections.

C. Section 321216, Asphalt Pavement

### 1.3 REFERENCES

A. American Society for Testing and Materials (ASTM):

1. ASTM D1557 – Standard Test Methods for Laboratory Compaction Characteristics of Soil Using Modified Effort

## 2.0 PRODUCTS

### 2.1 MATERIALS

A. Class II Aggregate Base per Caltrans Standard Specifications, or Local Municipality.

## 3.0 EXECUTION

### 3.1 EXAMINATION

A. Comply with Section 013113, Project Coordination.

B. Verify substrate has been inspected, gradients and elevations are correct, and that it is dry.

### 3.2 PREPARATION

A. Correct irregularities in substrate gradient and elevation by scarifying, reshaping and

re-compacting.

B. Do not place fill on soft, muddy, or frozen surfaces.

3.3 AGGREGATE PLACEMENT

A. Place aggregate in maximum 6-inch layers and compact to specified density.

B. Level and contour surfaces to elevations and gradients indicated.

C. Add small quantities of fine aggregate to coarse aggregate as appropriate to assist compaction.

D. Add water to assist compaction. If excess water is apparent, remove aggregate and aerate to reduce moisture content.

E. Use mechanical tamping equipment in areas inaccessible to compaction equipment.

3.4 TOLERANCES

A. Flatness: Maximum variation of 1/4 inch measured with 10-foot straight edge.

B. Scheduled Compacted Thickness: Within 1/4 inch.

C. Variation From Design Elevation: Within 1/2 inch.

3.5 FIELD QUALITY CONTROL

A. Comply with pertinent provisions of Division 1 of these Contract Documents for quality requirements and testing and inspection services.

B. Compaction testing will be performed in accordance with ASTM D1557.

C. If tests indicate Work does not meet specified requirements, remove Work, replace and retest at no cost to the Owner.

**END OF SECTION**

# SECTION 321216 - ASPHALT PAVING

## 1.00 - GENERAL

- SECTION INCLUDES

  A. Asphaltic concrete paving and surface sealer; wearing binder or base course.

  B. Aggregate base course.

- PRODUCTS INSTALLED BUT NOT FURNISHED UNDER THIS SECTION

  A. Section 05500 - Metal Fabrications: Supply of gutter drainage grilles and frames for placement by this Section.

- RELATED SECTIONS

  A. Section 312213 - Rough Grading: Preparation of site for paving and base.

  B. Section 312333 - Backfilling: Compacted subbase for paving.

  C. Section 099100 - Painting: Pavement markings.

- UNIT PRICE - MEASUREMENT AND PAYMENT

  Not Used.

- REFERENCES

  A. City Public Work's Design stds. and std. Details (section 1).

  B. State of California Department of Transportation, Standard Specifications, latest edition.

- PERFORMANCE REQUIREMENTS

  A. Paving: Designed for parking and related traffic. Verify other requirements in conformance with other applicable standards.

- QUALITY ASSURANCE

  A. Perform Work in accordance with California Department of Transportation Standard specifications.

  B. Mixing Plant: Conform to Public Work's standard.

C. Obtain materials from same source throughout.

D. Maintain one copy of each document on site.

- REGULATORY REQUIREMENTS

A. Conform to applicable code for paving work on public property.

- ENVIRONMENTAL REQUIREMENTS

A. Do not place asphalt when base surface temperature is less than 40 degrees F, or surface is wet or frozen.

**2.00 - PRODUCTS**

2.01 MATERIALS

A. Asphalt Cement: ASTM D946 In accordance with Public Work's standards.

B. Aggregate for Binder Course Mix: In accordance with Public Work's standards.

C. Aggregate for Wearing Course Mix: In accordance with Public Work's standards.

D. Fine Aggregate: In accordance with Public Work's standards.

E. Mineral Filler: Finely ground particles of limestone, hydrated lime or other Mineral dust, free of foreign matter.

2.02 ACCESSORIES

A. Primer: In accordance with Public Work's standards.

B. Tack Coat: In accordance with Public Work's standards.

2.03 ASPHALT PAVING MIX

A. Use dry material to avoid foaming. Mix uniformly per Public Work's standards.

2.04 SOURCE QUALITY CONTROL

Not Used.

**3.00 - EXECUTION**

3.01 EXAMINATION

A. Verify base conditions under provisions of Section 01039.

B. Verify that compacted subgrade is dry and ready to support paving and imposed loads.

C. Verify gradients and elevations of base are correct.

3.02 SUBBASE

A. Aggregate Base Course forms the base construction for work of this Section. Refer to Civil Drawings.

3.03 PREPARATION – PRIMER

A. Apply primer in accordance with Public Work's standards.

B. Apply primer to contact surfaces or curbs, gutters and driveways.

C. Use clean sand to blot excess primer.

3.04 PREPARATION - TACK COAT

A. Apply tack coat in accordance with Public Work's standards.

B. Apply tack coat to contact surfaces of curbs, gutters and driveways.

3.05 PLACING ASPHALT PAVEMENT - SINGLE COURSE

A. Install Work in accordance with Public Work's standards.

B. Place asphalt within 24 hours of applying primer or tack coat.

C. Place to thickness identified on drawings.

D. Install catch basins, frames and curb inlet in correct position and elevation.

E. Compact pavement by rolling. Do not displace or extrude pavement from position. Hand compact in areas inaccessible to rolling equipment.

- F. Develop rolling with consecutive passes to achieve even and smooth finish, without roller marks.

3.06 TOLERANCES

A. Flatness: Maximum variation of 1/4 inch measured with 10 foot straight edge.

B. Scheduled Compacted Thickness: Within 1/4 inch.

C. Variation from True Elevation: Within 1/2 inch.

3.07 FIELD QUALITY CONTROL

A. Field inspection and testing will be performed

3.08 PROTECTION

A. Immediately after placement, protect pavement from mechanical injury for 5 days.

END OF SECTION

# SECTION 321313 - CONCRETE PAVING

## 1.00 - GENERAL

1.01 SECTION INCLUDES

A. Concrete sidewalks, integral curbs, gutters, median barriers, parking areas and driveways.

B. Aggregate base course.

1.02 PRODUCTS INSTALLED BUT NOT FURNISHED UNDER THIS SECTION

Not Used.

1.03 RELATED SECTIONS

A. Section 312213 - Rough Grading: Preparation of site for paving and base.

B. Section 312333- Backfilling: Compacted subbase for paving.

C. Section 321216 - Asphalt Paving: Asphalt wearing course.

D. Section 099100 - Painting: Pavement markings.

1.04 UNIT PRICE - MEASUREMENT AND PAYMENT

Not Used.

1.05 REFERENCES

A. ACI 301 - Specifications for Structural Concrete for Buildings.

B. ACI 304 - Recommended Practice for Measuring, Mixing, Transporting and Placing Concrete.

C. ANSI/ASTM A185 - Welded Steel Wire Fabric for Concrete Reinforcement.

D. ASTM A615 - Deformed and Plain Billet-Steel for Concrete Reinforcement.

E. ASTM C33 - Concrete Aggregates.

F. ASTM C94 - Ready Mix Concrete.

G. ASTM C150 - Portland Cement

H. City Design Standards and standard details for construction.

1.06 PERFORMANCE REQUIREMENTS

Not Used.

1.07 SUBMITTALS

Not Used.

1.08 QUALITY ASSURANCE

A. Perform work in accordance with City standards.

B. Obtain cementitious materials from same source throughout.

1.09 REGULATORY REQUIREMENTS

A. Conform to applicable standards for paving work on public property.

1.10 ENVIRONMENTAL REQUIREMENTS

A. Do not place concrete when base surface temperature is less than 40 degrees F, or surface is wet or frozen.

**PART 2 - PRODUCTS**

2.01 FORM MATERIALS

A. Form Materials: Conform to ACI 301.

2.02 REINFORCEMENT

A. Per Civil & Structural Drawings.

2.03 CONCRETE MATERIALS

Not Used.

2.04 ACCESSORIES

Not Used.

2.05 SOURCE QUALITY CONTROL

A. Refer to City Standards.

## 3.00 - EXECUTION

3.01 EXAMINATION

A. Verify compacted subgrade is acceptable, per Civil Drawings and ready to support paving and imposed loads.

B. Verify gradients and elevations of base are correct.

3.02 SUBBASE

A. Aggregate Base Course forms the base construction for work of this Section per Civil Drawings.

3.03 PREPARATION

A. Moisten base to minimize absorption of water from fresh concrete.

B. Coat surfaces of manhole, catch basin frames with oil to prevent bond with concrete pavement.

3.04 FORMING

A. Place and secure forms to correct location, dimension, and profile.

B. Assemble formwork to permit easy stripping and dismantling without damaging concrete.

3.05 REINFORCEMENT

Not Used.

3.06 PLACING CONCRETE

A. Place concrete as specified in drawings and specs

B. Place concrete to pattern indicated.

3.07 JOINTS

A. Refer to City Standards.

3.08 EXPOSED AGGREGATE

A. Wash exposed aggregate surface with clean water and scrub with stiff bristle brush exposing aggregate to match sample panel.

3.09 FINISHING

A. Refer to City Standards

3.10 PROTECTION

A. Immediately after placement, protect pavement from premature drying, excessive hot or cold temperatures, and mechanical injury.

3.11 SCHEDULES

A. Trash enclosure pad and apron: 4,000 psi 28 day concrete 6 inches thick, light broom finish, buff color.

B. Walks: 2,000 psi 28 day concrete, a minimum of 4" thick, light broom

**END OF SECTION**

# SECTION 321723 - PAVEMENT MARKINGS

## 1.0 GENERAL

### 1.1 SUMMARY

A. This Section includes all labor, materials, equipment, operations, or methods listed, mentioned or scheduled on the plans and/or herein specified, including all incidentals necessary and required for completion of work under this Section.

B. Provide pavement markings for parking lot and tread as indicated on project Drawings.

### 1.2 RELATED SECTIONS

A. Documents affecting work of this Section include, but are not necessarily limited to, General Conditions, Special Conditions and Division 1 of these Contract Documents.

B. Section 321216 - Asphalt Paving

### 1.3 SUBMITTALS

A. Comply with provisions of Section 013300, Submittal Procedures.

B. Submit for approval manufacturer's product data and test reports.

C. Submit manufacturer's full range of standard colors for selection.

### 1.4 QUALITY ASSURANCE

A. Comply with governing codes and regulations in effect at time of project approval.

B. Deliver, handle, and store materials in accordance with their manufacturer's instructions.

## 2.0 PRODUCTS

### 2.1 MANUFACTURERS & MATERIALS

A. Acceptable manufacturers and materials are as follows; select one for project and verify with Architect:

1. Zone-Lac by Morton International, Inc.

2. Traffic Marking Paint 1P-901 or Vinyl-Stripe vinyl epoxy paint W-801 by Dunn Edwards Corporation.

3. 160 Vinyl Traffic Paint by ICI Deluxe Paints.

4. Traffic Zone Paint B46 Series by Sherwin Williams.

B. Color Selection: Blue where called out on accessible parking stall details. White elsewhere.

## 3.0 EXECUTION

### 3.1 PREPARATION

A. Remove dust, debris, curing and sealing compounds, and other foreign substances detrimental to paint bond. Use a commercial degreasing solution to remove grease and oil.

### 3.2 INSTALLATION

A. Mix and apply paint in compliance with the paint manufacturer's printed instructions.

B. Paint pavement lines and legends in compliance with the layout shown on the Drawings. The work shall be straight or curved as indicated, of uniform color and texture with edges parallel, clean, sharply defined and accurate.

C. Modify existing pavement markings by grinding or sandblasting to remove paint.

D. Stripe for 8-foot wide stalls, as required, to provide accessible space as indicated. Number of stalls requiring striping to be determined after field measurements.

E. Dry film thickness of cured paint film shall be 15 mils, or more where required for complete opacity.

F. Restore damaged finishes. Clean and protect work from damage.

**END OF SECTION**

# SECTION 321713.23 – RUBBER PARKING BUMPERS

## 1.0 GENERAL

### 1.1 SUMMARY

A. This Section includes all labor, materials, equipment, operations, or methods listed, mentioned or scheduled on the plans and/or herein specified, including all incidentals necessary and required for completion of work under this Section.

B. Provide and install rubber parking bumpers as shown on Drawings and as specified herein.

### 1.2 RELATED SECTIONS

A. Documents affecting work of this Section include, but are not necessarily limited to, General Conditions, Special Conditions and Division 1 of these Contract Documents.

B. Section 321216 - Asphalt Paving

C. Section 321723 - Pavement Markings

### 1.3 REFERENCES

A. American Society for Testing and Materials (ASTM):

1. ASTM C531 - Test Method of Linear Shrinkage and Coefficient of Thermal Expansion of Chemical-resistant Mortars, Grouts and Monolithic Surfacings

2. ASTM C642 - Test Method for Density, Absorption, and Voids in Hardened Concrete

3. ASTM D412 - Test Methods for Rubber Properties in Tension

4. ASTM D573 - Test Method for Rubber- Deterioration in an Air Oven

5. ASTM D395 - Standard Test Methods for Rubber Property- Compression Set

6. ASTM D2240 - Test Method for Rubber Property- Durometer Hardness

7. ASTM D2370 - Test Method for Tensile Properties of Organic Coatings

8. ASTM D4060 - Test Methods for Abrasion Resistance of Organic Coatings by the Taber Abraser

1.4 SUBMITTALS

A. Comply with provisions of Section 013300, Submittal Procedures.

B. Product Data: Submit for all products proposed for use describing physical characteristics, sizes, patterns and method of installation.

C. Shop Drawings: Submit dimensioned location plan and attachment details.

D. Test Reports: Provide certified test reports, prepared by an independent testing laboratory, showing conformity to specified quality standards. Test Results shall represent average results for production goods and shall be not over two years old.

E. Closeout Submittals:

1. Maintenance data: Submit manufacturer's recommended cleaning and maintenance data, including maintenance procedures, recommended maintenance materials and suggested schedule for cleaning.

1.5 DELIVERY, STORAGE AND HANDLING

A. Deliver materials to the site in manufacturer's original packaging containing manufacturer's name, product color, identification number and other related information.

B. Store materials in accordance with manufacturer's recommendations.

1.6 QUALITY ASSURANCE

A. Installer Qualifications: Company with a minimum of two years documented experience in the installation of similar recycled rubber systems and approved by the manufacturer.

**2.0 PRODUCTS**

2.1 MANUFACTURER

A. GNR Technologies, 990 Upton, La Salle, Quebec Canada H8R 2T9, 1-800-641-4143, www.gnrtech.com

## 2.2 MATERIALS

A. Rubber composite material: 100 percent recycled rubber with polyurethane, prepolymer binder, compression molded; resistant to UV, moisture and oil; complying with the following:

1. ASTM C642: Minimum density of 0.6 oz/cu.in. minimum.

2. ASTM D2240 Minimum durometer hardness of 65A V &.

3. ASTM D412 Minimum 210 psi tensile strength of primary structural components

4. ASTM D395: Minimum compression deformation of 10 percent at 70 psi and 68 degrees

5. ASTM D746: Low temperature brittleness of -40 degrees F

6. ASTM C672: Freeze and thaw when exposed to de-icing chemicals producing no loss after 50 cycles.

7. ASTM C531: Coefficient of thermal expansion of at least $8x10^{-6}$ in./in./degrees F.

8. ASTM D573: Weathering for a minimum of 70 hours at 158 degrees F with the following minimum results:

   a. Hardness retained: 100 percent (V 5 percent).

   b. Compressive Strength: 100 percent (V 5 percent).

   c. Tensile Strength: 100 percent (V 5 percent).

   d. Elongation retained: 100 percent (V 5 percent).

   e. Hardness retained: 100 percent (V 5 percent).

B. Reflective material: GNR Technologies “Reflect Guard” thermally embedded reflective material, complying with the following:

1. ASTM D2370 Tensile strength, minimum 1,000 psi.

2. ASTM D2370 Elongation, 200 percent minimum.

3. ASTM D4060 Abrasion, maximum 20 mg loss.

C. Adhesive: GNR Technologies "PL Premium" urethane adhesive, non-toxic, non-flammable, waterproof; complying with the following:

1. Viscosity: Tensile strength, minimum 1,000 psi, when tested to ASTM D2370.

2. Solids: 95 percent V 2 percent.

3. Color: Light brown.

4. Working or Open Time: Up to one hour.

5. Weight per gallon: 10.5 pounds.

6. Flash Point: 250 degrees F.

7. Freeze Thaw Stability: Does not freeze.

8. Storage stability: One year.

9. Shrinkage: None.

10. Maximum VOC: 100 grams per liter.

D. Stakes: GNR Technologies 14 inch length steel spikes, 1/2 inch diameter, capped; coated with corrosion-resistant black paint.

E. Lag Bolts: 12-inch length steel bolts, 1/2 inch diameter; with 1/2 inch steel washer.

F. Lag bolts: 5-inch length steel bolts with lead shields, 1/2 inch diameter; coated with Corrosion-resistant black paint.

G. Lag bolts: 5 inch length steel bolts with polyethylene shields, 8 inch diameter; coated with corrosion-resistant black paint.

2.3 MANUFACTURED UNITS

A. Parking bumpers shall be GNR Technologies' "Park-It", manufactured of 100 percent recycled rubber, ground and blended with polyurethane prepolymer.

1. Resistant to warping, cracking, chipping and rotting.

2. Flexible and capable of conforming to irregularities in paving surface.

3. Finish: Black body with "Reflect Guard" applied reflective material.

4. Sizes: Refer to drawings

## 3.0 EXECUTION

### 3.1 EXAMINATION

A. Verify that substrates are smooth and flat and ready to receive the work.

B. Verify that pavement and ambient air temperature are within temperature range recommended for proper curing of adhesive. Do not install with adhesive when pavement is wet or rain is anticipated.

### 3.2 PREPARATION

A. Clean and remove debris and dust from pavement surface and surrounding area. Wash pavement with water and allow to dry.

### 3.3 FIELD QUALITY CONTROL

A. Arrange for manufacturer to provide field service specialist at commencement of installation to instruct installer in methods and to assure that project conditions are satisfactory.

### 3.4 ADJUSTING

A. Adhesive allows repositioning within the first hour after application. Immediately after placement, adjust and reposition bumpers parallel to parking space and centered in the space width.

### 3.5 CLEAN UP AND PROTECTION

A. Immediately after placement and adjustment, remove excessive adhesive.

B. Protect finished installation per manufacturer's recommendations.

**END OF SECTION**

# SECTION 321726 – TACTILE WARNING SURFACE

## 1.0 GENERAL

### 1.1 SUMMARY

A. This Section includes all labor, materials, equipment, operations, or methods listed, mentioned or scheduled on the plans and/or herein specified, including all incidentals necessary and required for completion of work under this Section.

B. Provide and install cast-in-place tactile warning surfacing as shown on project Drawings.

### 1.2 RELATED SECTIONS

A. Documents affecting work of this section include, but are not necessarily limited to, General Conditions, Special Conditions and Division 1 of these Contract Documents.

B. Section 321216 – Asphalt Paving

C. Section 321313 – Portland Cement Concrete Pavement

### 1.3 REFERENCES

A. American Society for Testing and Materials (ASTM):

1. ASTM D570-98 for water absorption.
2. ASTM C1028-96 for slip resistance.
3. ASTM D695-02a for compressive strength.
4. ASTM D638-03 for tensile strength.
5. ASTM D790-03 for flexural strength.
6. ASTM D543-95 for chemical stain resistance.
7. ASTM D2486-00 for abrasive wear.
8. ASTM C501-84 for water resistance.
9. ASTM E84-05 for fire resistance.
10. ASTM D5420-04 for impact resistance.

11. ASTM G155-05a for accelerated weathering.

1.4 SUBMITTALS

A. Comply with provisions of Section 013300, Submittal Procedures.

B. Product Data: Submit manufacturer's literature describing products, instructions for installation, and maintenance procedures.

1. Provide manufacturer's color chart for selection by the Architect.

C. Samples: Provide samples as directed by Architect for verification purposes.

D. Shop Drawings: provide Shop Drawings showing fabrication details, tile placement, installation materials and procedure.

E. Materials Test Reports: Provide materials test reports from a qualified independent testing laboratory showing that materials for use are in compliance with all applicable requirements and meet the properties indicated.

F. Warranty: Provide manufacturer's standard warranty.

1.5 DELIVERY, STORAGE AND HANDLING

A. Materials shall arrive in manufacturer's original product packaging and shall be stored unopened until installation.

B. Materials shall be stored on a flat, level, and dry surface.

1.6 QUALITY ASSURANCE

A. Provide materials from a single manufacturer.

B. Tactile warning surfacing must comply with ADA requirements as well as the California Code of Regulations (CCR) Title 24, Part 2.

C. Installer Qualifications: Contractor conducting installation shall conform to all local and state licensing and bonding requirements.

**2.0 PRODUCTS**

2.1 MANUFACTURER

A. Engineered Plastics, Inc., 300 International Drive # 100, Williamsville, NY 14221, 1-800-682-2525, www.armor-tile.com.

## 2.2 MATERIALS

A. Tactile Warning Pavers: Vitrified Polymer Composite (VPC) Surface Applied Detectable/Tactile Warning Surface Tiles shall be an epoxy polymer composition with an ultra violet stabilized coating employing aluminum oxide particles in the truncated domes

1. Paver shall meet the following requirements:

   a. Compressive Strength: greater than 28,000 psi.

   b. Tensile Strength: greater than 19,000 psi.

   c. Slip Resistance: greater than .80.

   d. Water Absorption: less than .05%.

   e. Flexural Strength: greater than 25,000 psi.

   f. Chemical Stain Resistance: shall not discolor or stain.

   g. Abrasive Wear: less than .060 after 1,000 cycles.

   h. Water Resistance: greater than 500.

   i. Fire Resistance: flame spread less than 15.

   j. Impact Resistance: greater than 550 in. lbf/in.

2. Color:

   a. Vehicular hazardous area: Yellow

   b. All other locations from parking lot to sidewalk: Grey

3. Size: 36" x 48" x 3/16”

B. Fasteners: Color match, corrosion resistant, flat head drive anchor, ¼” diameter x 1 ½” long as supplied by Manufacturer.

C. Adhesive: As supplied by Manufacturer

D. Sealant: As supplied by Manufacturer

# 3.0 EXECUTION

## 3.1 INSTALLATION

A. Install in accordance with manufacturer's instructions.

B. The surface to receive the Surface Applied Tactile Warning Surface Tile is to be mechanically cleaned with a diamond cup grinder or shot blaster to remove any dirt or foreign material. This cleaning and roughening of the concrete surface should include at least 4 inches around the perimeter of the area to receive the tile, and also along the cross pattern established by the corresponding areas on the backside of the tile. Those same areas should then be cleaned with a clean rag soaked in Acetone.

C. Immediately prior to installing the Surface Applied Detectable/Tactile Warning Surface Tile, the concrete surfaces must be inspected to ensure that they are clean, dry, free of voids, curing compounds, projections, loose material, dust, oil, grease, sealers and determined to be structurally sound and cured for a minimum of 30 days.

D. Using Acetone, wipe the backside of the tile around the perimeter and along the internal cross pattern, to remove any dirt or dust particles from the area to receive the adhesive.

E. Apply Tactile Bond & Seal adhesive to the backside of the tile, following the perimeter and internal cross pattern established by the tile manufacturer. Sufficient adhesive must be placed on the prescribed areas to have full coverage across the 2" width of the adhesive locator and shall be applied to within 1/4" continuously around the perimeter edge of the tile. The entire tube of adhesive shall be applied to the back of each tile, sizes 24" x 36" and greater.

F. Working from the center of the tile outwards, proceed to drill and install all fasteners in the tile's molded recesses.

G. Standing with both feet applying pressure around the molded recess provided in the tile, drill a hole true and straight to a depth of 3½" using a 1/4" masonry drill bit. Drill through the tile without hammer option (on the drill) until the tile has been successfully penetrated, then with hammer option (on the drill) to drill into the concrete. Maintaining foot pressure on both sides of the hole while drilling prevents concrete dust from accumulating between the tile and concrete which can affect the tile being installed flush and may compromise installation integrity.

H. Immediately after drilling each hole, before moving on to the next, and while still applying foot pressure, mechanically fasten tiles to the concrete substrate using a leather bound or hard plastic mallet to set the fasteners. Ensure the fastener has been placed to full depth in the dome, straight, and flush to the top of dome. Drive

the pin of the fastener with the mallet, taking care to avoid any inadvertent blows to the truncated dome or tile surface.

I. Following the installation of the fasteners, the concrete dust should be vacuumed, brushed or blown away from the tile's surface and adjacent concrete. Using Acetone on a rag, wipe the concrete around the tile's perimeter to ensure a clean, dry surface to receive perimeter sealant.

J. Tactile Bond & Seal perimeter caulking sealant should be applied following the sealant manufacturer's recommendations. Tape all perimeter edges of the tile back 1/16" from the tile's perimeter edge and tape the adjacent concrete back 1/2" from the tile's perimeter edge to maintain a straight and even caulking line. Apply sealant around tile perimeter using care to work sealant into any void between the tile and concrete interface. Tool the perimeter caulking with a rounded plastic applicator or spatula to create a cove profile between the tile and adjacent concrete. Remove tape immediately after tooling perimeter caulking sealant.

K. In order to maintain proper spacing between truncated domes on adjacent tiles, the tapered edge should be trimmed off using a continuous rim diamond blade in a circular saw or mini-grinder. The use of a straightedge to guide the cut is required. All cuts should be made prior to installation of the tiles. If installing adjacent tiles, care should be taken to leave a 1/8 inch gap between each tile to allow for expansion and contraction.

## 3.2 CLEAN UP AND PROTECTION

A. Protect tiles against damage during project construction and tile installation period to comply with manufacturer's recommendations.

B. In the event of rolling loads following installation, protect tiles by covering them with plywood or hardwood.

C. Clean tiles by method as recommended by manufacturer not more than four days prior to final inspection.

## 3.3 WARRANTY

A. Materials shall be free from all defects.

B. Tactile warning tiles shall be guaranteed in writing for a period of five years from date of final completion.

C. Warranty shall include defective work, breakage, deformation, and loosening of tiles.

END OF SECTION

# SECTION 328000 – IRRIGATION

## 1.0 GENERAL

### 1.1 SUMMARY

A. This Section includes all labor, materials, equipment, operations, or methods listed, mentioned or scheduled on the plans and/or herein specified, including all incidentals necessary and required for completion of work under this Section.

B. Provide and install all irrigation work as shown on project Drawings, including all connections, irrigation lines, sleeves and equipment, and moisture sensors and connection to existing timers necessary for a complete irrigation system.

C. Ensure that no existing irrigation to existing planting is compromised and that all main lines continue operation during construction. Provide overland lines to connect existing irrigation as required to ensure a complete system.

### 1.2 RELATED SECTIONS

A. Documents affecting work of this Section include, but are not necessarily limited to, General Conditions, Special Conditions and Division 1 of these Contract Documents.

B. Division 31 – Earthwork

C. Section 329000 - Planting: Landscape Work

### 1.3 QUALITY ASSURANCE

A. Standards, Specifications, and Codes

1. All work shall be in full accordance with the latest rules and regulations of the Safety Orders of the Division of Industrial Safety, the Uniform Plumbing Code, and other applicable state or local codes or regulations in effect at the time of the project. Nothing on the Drawings or in the Specifications is to be construed to permit work not conforming to these codes, rules, and regulations.

2. When the Specifications call for materials or construction of a better quality or larger size than required by the above rules and regulations, the provisions of these Specifications shall take precedence over the requirements of said rules and regulations.

3. The Contractor shall furnish, without extra charge, any additional material and/or labor when required by compliance with the above rules and regulations though the work be not mentioned in these particular Specifications or shown on the Drawings.

B. Wherever the term, “as per manufacturer's specifications and/or instructions,” is used, it shall mean in strict accordance with the manufacturer's printed directions. If these directions conflict with this Specification, the matter shall be brought to the attention of the Architect and his instructions obtained before proceeding with the work.

## 1.4 SUBMITTALS

A. Comply with provisions of Section 013300, Submittal Procedures.

B. Materials Lists: Complete lists of materials proposed for installation.

1. List all materials by manufacturer's name and model number.

2. Only approved materials and items of equipment shall be used.

3. Any proposed substitutions, together with descriptive material, shall be submitted to the Architect.

4. Prior to the final acceptance of the irrigation system, the Contractor shall furnish three (1) individually bound Service Manuals to the Architect for use by the Owner.

5. The manuals shall contain complete exploded drawings, diagrams, and spare-parts lists of all equipment installed showing components and catalog numbers together with the manufacturer's name and address.

6. In addition, each Service Manual shall contain the following:

a. Index sheet indicating the Contractor's name, address, and phone number.

b. Copies of equipment warranties and certificates.

c. List of equipment with names, addresses, and telephone numbers of all local manufacturer's representatives.

d. Complete operating and maintenance instructions in sufficient detail to permit operating personnel to understand, operate, and maintain all equipment.

1.5 FEES AND PERMITS

A. Work under this Section shall include all fees, permits, licenses, and required inspections by concerned governing agencies.

1.6 QUALITY ASSURANCE AND SPECIAL PROVISIONS

A. The use of a manufacturer's name and model or catalog number is for the purpose of establishing the standard of quality, general configuration desired, and, in the case of sprinkler heads, distribution of water only.

B. All materials throughout the systems shall be new and in perfect condition.

1.7 DELIVERY, STORAGE, AND HANDLING

A. Deliver all materials in timely manner to ensure uninterrupted progress of the work; store in such a manner as will preclude damage thereto and permit ready access for inspection and identification of each shipment.

B. Manufactured materials shall be delivered in original containers with brand and maker's names marked thereon.

1.8 EXISTING CONDITIONS

A. The Contractor shall visit the subject site to review the various existing conditions. A condition found to deviate from the Plans and Specifications shall be reported to the Owner’s Authorized Representative prior to submitting his bid proposal.

B. A static water pressure test shall be taken at the points of connection by the Contractor. Should the pressure fall below 40 psi or above 60 psi, the Owner’s Authorized Representative shall be notified prior to start of work.

**2.0 PRODUCTS**

2.1 MATERIALS – GENERAL

A. All materials shall be as herein specified and as specified and/or indicated on the Drawings.

2.2 PIPE

A. Plastic: Polyvinyl Chloride (PVC), Type 1120-1220, ASTM D1785.

1. Class and/or Schedules as specified on the Drawings.

2. All pipe shall be free of blisters, internal striations, or any other defects or imperfections.
3. Pipe shall be continuously and permanently marked with manufacturer's name; material type, size, schedule, or class; and quality-control identifications.

B. Pipe Fittings:

1. Plastic: Polyvinyl Chloride (PVC) Type 1; ASTM D2466. Solvent weld as specified on the Drawings.

C. Remote-Control Wire: Solid Copper, 600-volt AC, Type UF-AWG, UL approved for direct burial.

1. Wire shall be continuously and permanently marked with manufacturer's name, wire size, and identification.

2. Color of Control Wires shall be as follows:

a. Pilot Wires: #14 black.

b. Common Wire: #12 white.

## 3.0 EXECUTION

### 3.1 INSPECTION

A. Examine substrate in which the work is to be performed.

B. Do not proceed until unsatisfactory conditions have been corrected.

### 3.2 COORDINATION

A. Schedule and coordinate work with other trades.

1. Install pipe and sleeves under paving and through walls and footings.

2. Do not install heads until walls, curbs, headers, and other related structures are in place.

3. Do not install pipe until planting areas have been scarified under Planting work.

### 3.3 PREPARATION

A. Verification of Dimensions and Grades:

1. All scaled dimensions are approximate.
2. Before proceeding with any work, carefully check and verify all dimensions on the site.

3. Spacing of headers and locations of valves and quick couplers shall be as indicated on the Drawings and specified herein.

4. Above items shall be staked out and any deviation from Drawings and Specifications shall be reviewed by the Architect prior to installation.

3.4 INSTALLATION

A. Layout:

1. Lay out work as accurately as possible in accordance with the Drawings.

2. Where site conditions do not permit locating piping, valves, and heads where shown, notify the Architect immediately, and do not proceed until his instructions are obtained.

3. Do not trench through roots greater than 1" in diameter under existing tree canopies.

4. Run pipe lines in common trenches wherever practical.

5. Notify the Architect of any aspects of layout which will provide incomplete or insufficient water coverage of plant material, and do not proceed until his instructions are obtained.

6. Locate all underground utility lines prior to excavating irrigation, and bring any conflicts to the attention of the Architect.

7. Do not proceed with the work until instructions are received from the Architect.

B. Protection:

1. Protect existing and new work at all times.

2. Any existing buildings, equipment, piping, pipe coverings, sewers, sidewalks, landscaping, etc., damaged by the Contractor during the course of his work shall be replaced or repaired by the Contractor in a manner to return to prior condition, at the Contractor's own expense and before the

final payment is made.

3. The Contractor shall be responsible for damage caused by leaks in the piping systems being installed or in having been installed by him. He shall make good any damage so caused at his own expense.

C. Excavating and Trenching:

1. Excavation shall be in all cases ample in size to accommodate bedding material, to permit the pipes to be laid at the elevations intended, and to permit ample space for joining.

2. Make trenches for pipelines deep enough to provide minimum cover from finish grade as follows:

   a. 18-inch minimum cover over mainlines, except under paving where it shall be 24" inches with sand backfill.

   b. 12-inch cover over head lateral lines, except under paving where it shall be 24" inches with sand backfill.

3. Trenches shall be straight with bottoms at uniform slopes.

4. Underground lines shall have a minimum horizontal clearance of 2 inches from each other.

   a. All lines shall have a minimum horizontal clearance of 12 inches from the lines of other trades. (This requirement does not apply to any lines crossing at angles from 45 to 90 degrees with each other).

   b. A minimum 1-inch vertical clearance shall be maintained between lines which cross between these angles.

5. No line shall be installed parallel to and directly over another line.

6. Restore surfaces, existing underground installation, etc., damaged or cut as result of excavations, to original conditions.

7. Where irrigation lines interfere with other utilities, irrigation, trenching, and pipe work, adjust the trench depth as directed by the Architect.

D. Assembling Pipelines:

1. All pipe shall be assembled free from dirt and pipe scale. Field-cut ends shall be reamed to remove rough edges and burrs.

2. Solvent-Weld Joint

   a. Prepare joint by first making sure the pipe end is square, then deburring pipe end and cleaning pipe and fitting of dirt, dust, and moisture.

   b. Dry insert pipe into fitting to check for missizing; pipe should enter fitting one-third to one-half the depth of socket.

   c. Solvent Cement and Primer: Make and type approved by manufacturer(s) of pipe and fittings; cement shall be maintained at proper consistency throughout use.

   d. Coat the inside socket surface of fitting and external surface of male end of pipe with primer.

   e. Then, without delay, apply cement liberally to male end of pipe and also apply cement lightly to inside of socket.

   f. At this time apply a second coat of cement to the pipe end.

   g. Insert pipe immediately into fitting and turn one-quarter turn to distribute cement and remove air bubbles.

      1) Pipe must seat to bottom of socket and fitting.

      2) Check alignment of fitting.

      3) Pipe and fittings shall be aligned properly, without strain to either.

3. Hold joint still for approximately 30 minutes before handling and at least 6 hours before allowing water in pipe.

E. Thrust Blocks: Not Applicable

F. Threaded Joints for Plastic Pipe:

1. Field threading of plastic pipe or fittings is not permitted; factory-formed threads only will be permitted.

2. Where assembling to threaded plastic fitting, take up joint no more than one full turn beyond hand tight.

3. Use strap-type friction wrench only; do not use metal-jawed wrench.

G. Threaded Joints for Galvanized Steel Pipe - Not Applicable

H. Laying Pipe:

1. Bed in at least 2 inches of finely divided material with no rocks or clods over 1 inch in diameter to provide a firm uniform bearing.

2. PVC pipe shall be snaked from side to side of trench bottom to allow for expansion and contraction. One additional foot per 100 feet of pipe of the minimum allowance for snaking.

3. Do not lay pipe where there is water in trench or when temperature is 32 degrees F. or lower.

4. Cap or plug openings as pipeline is assembled to prevent entrance of dirt or obstruction. Remove caps or plugs only when necessary to continue assembly.

5. Where pipes pass through sleeves, provide removable nondecaying plug at ends of sleeve to prevent entrance of earth.

I. Remote Control Valves:

1. Remote Control Valves to be of same Manufacturer or be compatible, as shown on Drawings.

2. Install where shown and group together where practicable; limit one RCV per valve box.

3. Locate valves no closer than 12 inches from walk edges, buildings, and walls.

4. Thoroughly flush mainline before installing valve.

5. Place all control valves in valve box.

a. Use Extensions as necessary to keep soil away from valves and solenoids.

b. No soil shall be allowed around valve.

c. Fill in area below valve with pea gravel.

d. Attach a 2-inch-diameter aluminum identification tag with valve numbers stamped on it to each valve; secure with wire.

J. Automatic Control Wiring:

1. Run lines along main wherever practicable.

2. Tie wires in bundles with pipe-wrapping tape at 10-foot intervals, and allow slack for contraction between strapping.

3. Loop minimum of 2 (two) feet of extra wire in each valve box; both control wire and ground wire.

4. Connections shall be made with twist-type (wire nut) connectors and sealed with epoxyresin sealer packs.

5. Splicing will be permitted only on runs exceeding 2,500 feet. Locate all splices at valve locations.

6. Each control valve shall be connected to its respective controller with its own individual control wire. Common ground wire shall be common to only those valves controlled by each individual controller.

K. Flushing Lines:

1. Flush all rock, sand, and debris from the lines.

2. Flush mainlines prior to installing valves and connecting lateral lines.

3. Flush long dead-end runs prior to capping pipe.

4. Flush lateral lines prior to installing heads.

5. Continue flushing process with water running slowly as heads are installed, starting closest to valve and working outward.

L. Testing Pipe:

1. Pipe shall be center loaded with sufficient backfill in accordance with the paragraph on backfilling to anchor pipe before testing.

2. No fittings shall be covered during testing.

3. No testing shall be done until the last solvent welded joint has had twenty-four (24) hours to set and cure.

4. Install control valves prior to testing.

5. Notify the Architect at least three (3) days in advance of testing.

6. Tests will be observed and approved by the Architect.
7. Perform testing and furnish all equipment for testing of work of this Section.

8. Apply the following tests after solvent-weld plastic pipe joints have cured at least 24 hours.

   a. Test mainlines hydrostatically at 125 psi minimum. Lines will be approved if test pressure is maintained for 24 hours.

   b. Test lateral lines with water at line pressure, and visually inspect for leaks.

   c. The Contractor shall make tests and repairs as necessary until test conditions are met.

   d. Retest after correcting defects.

M. Backfilling Pipe:

1. Do not backfill until pipe has been tested and approved by the Architect.

2. Backfill materials shall be like material excavated.

   a. Backfill to depth of 6 inches above top of pipe shall be finely divided material free of rocks or clods over 2 inches in diameter.

   b. Remaining backfill shall be free of rocks and clods over 2 inches in diameter.

   c. Place backfill in 6-inch lifts, and compact by tamping as follows:

      1) Planting Areas: Percentage equal to adjacent soil.

      2) Under Paving: Percentage to that specified for the paving subgrade and base material.

N. Automatic Controller:

1. Existing

O. Backflow Prevention: Existing

P. Coverage Test:

1. When the irrigation system has been completed, a coverage test shall be performed in the presence of the Architect to determine if coverage of water afforded planting areas is complete.

2. Make minor changes in heads and head location to provide adequate coverage at no additional cost to the Owner.

Q. System Tests:

1. Prior to final acceptance, the irrigation system shall be tested and inspected for correctness of coverage in the presence of the Architect. All inadequate coverage will be corrected before final acceptance.

R. As-Builts:

1. Provide and keep up to date a complete “Record” set of blueline prints, which shall be corrected daily, and show every change from the original Drawings and Specifications as well as dimensioned locations of pipe and equipment.

2. This set of Drawings shall show dimensions of all mainlines and gate valves from the nearest structure.

3. “Record” Drawings shall show dimensions of all mainlines and gate valves from the nearest structure.

4. These Drawings shall also serve as work progress sheets, and neat and legible annotations shall be made daily as the work proceeds, showing the work as actually installed.

S. Wrenches, Keys, and Couplers:

A. Provide the Owner at completion of the planting maintenance period with three each of all operating and servicing keys and wrenches required for complete maintenance and operation of all valves. Include all wrenches necessary for complete disassembly of all valves.

## 3.5 WARRANTY

A. Repair of Damage: All damage to paving, planting, structures, and other improvements due to settlement of improperly compacted trench backfill shall be promptly repaired to the satisfaction of the Owner 's Representative and without additional expense to the Owner.

B. All materials and workmanship shall be as specified and shall for minimum period of one (1) year.

C. At the end of this period all required repairs and adjustments, including adjustment to grade shall be made including all repairs to other work made necessary thereby, without additional expense to the Owner.

D. Present to the Architect at time of final acceptance, warranties for all materials used.

**END OF SECTION**

# SECTION 329000 - PLANTING: LANDSCAPE WORK

## 1.0 GENERAL

### 1.1 SUMMARY

A. This Section includes all labor, materials, equipment, operations, or methods listed, mentioned, or scheduled on the plans and/or herein specified, including all incidentals necessary and required for completion of work under this Section.

B. Provide and install all landscaping as shown on project Drawings and as specified herein, including all planting and maintenance under a sixty (60) calendar-day maintenance period (see part 3.8 of this Section).

### 1.2 RELATED SECTIONS

A. Documents affecting work of this Section include, but are not necessarily limited to, General Conditions, Special Conditions and Division 1 of these Contract Documents.

B. Division 31 - Earthwork

C. Section 328000 - Irrigation

### 1.3 GENERAL CONDITIONS

A. The contractor shall maintain adequate protection of his work from damage and shall protect the Owner 's and adjacent property and related appurtenances from injury or loss arising from this Contract. Damaged or disturbed items shall be replaced with equal by the Contractor at no cost to the Owner.

B. The Contractor shall pay Federal, State, and Local Sales and/or Use Taxes to materials, processes, or devices purchased or used in connection with the work. Local, Municipal, and State Laws and Rules and Regulations governing or relating to any portion of this work are hereby incorporated into these Specifications.

### 1.4 PERMITS, LICENSES, AND INSPECTIONS

A. Any permit, license and/or inspection required by the legal authorities or agencies having jurisdiction over the construction or installation of the work as shown on the Plans or specified herein, shall be paid and obtained by the Contractor at the proper time.

### 1.5 BONDS AND INSURANCES

A. The Contractor shall furnish the appropriate bond(s) in the amount of the required per cent of his bid proposal and carry insurance as required by the Owner. The Contractor shall be informed of these requirements from the Owner prior to submitting his bid proposal.

1.6 EXISTING CONDITIONS

A. The Contractor shall visit the subject site to review the various existing conditions. A condition found to deviate from the Plans and Specifications shall be reported to the Owner 's Authorized Representative prior to submitting his bid proposal.

1.7 PURPOSE OF DOCUMENTS

A. The intent of the documents is to include, unless otherwise stated, the labor, materials, equipment, appliances, and transportation for the proper execution of the work as required for complete construction as shown on the Plans and specified herein. The Contractor shall be responsible for complete layout of improvements as shown on the Plans and as specified herein. Written dimensions shall take precedence over scaled dimensions. Follow as closely as practical making no alterations unless prior review and appropriate action is taken by the Owner 's Authorized Representative.

B. Each plant shall be installed in locations as shown on the Plans. Plants improperly located shall be relocated at no additional cost to the Owner. Notwithstanding is the fact that these documents may be deficient in setting forth a complete detailed description of the work to be done.

1.8 RECORD DRAWINGS

A. On one set of the Plans, the Contractor shall record accurately changes in the work which constitute departures from the original Contract Drawings. The Contractor shall dimension from two permanent points of reference (building corners, sidewalks, or road intersections, etc.) the location of the following items:

1. Connections to existing water lines

2. Routing of pressure supply lines

3. Sprinkler control valves

B. Upon completion of each increment of work, the Contractor shall transfer information including the dimensions to a clean set of Ozalid prints of the Plans and the changes. The dimensions and changes shall be recorded in a legible and workmanlike manner to the satisfaction of the Owner 's Authorized Representative. Prior to stage acceptance, these Plans shall be presented to the

Owner 's Authorized Representative for review.

## 2.0 PRODUCTS

### 2.1 MATERIALS

A. Plant Material:

1. Plants and planting material shall meet the specifications of Federal, State, and County laws requiring inspection for plant disease and insect control. Inspection certificates required by law shall accompany shipments, of which a copy of each inspection certificate shall be given to the Owner.

2. Plants shall be true to botanical name and one of each bundle or lot shall be tagged with the botanical name and container size of the plants in accordance with the standards of practice recommended by the American Association of Nurserymen.

3. Plants shall be healthy, vigorous stock, free of insects and disease, and not root-bound. Quality and size shall conform with the current edition of "Horticultural Standards" for number one grade nursery stock as adopted by the American Association of Nurserymen. Plants which are not true to botanical name shall be removed from the site and replaced with acceptable plants at no extra cost to the Owner. Botanical names shall take precedence over common names.

4. Due to ever changing availability of plant material, the Contractor may submit plant type substitution requests to the Owner 's Authorized Representative for review, prior to ordering.

## 3.0 EXECUTION

### 3.1 PREPARATION

A. Finish Grading:

1. Planting areas shall be graded to the elevations indicated on the site plan. Grades not otherwise indicated shall be uniform levels or slopes between points where elevations are given. Minor adjustments of finish grades shall be made at the direction of the Owner's Authorized Representative, if required, at no additional cost to the Owner.

2. Finish grade shall be smooth, even, and of a uniform plane with no abrupt changes of surface. Soil area adjacent to buildings shall slope away from the buildings to allow a natural runoff of water, and surface drainage shall be directed as indicated on the drawings by remodeling surfaces to

facilitate the natural runoff of water. Low spots and pockets shall be graded to drain properly.

3. Shrub areas: The finish grade of shrubbery areas shall be 1-1/2 inches below the grade of adjacent pavement, walks, curbs, header, or walls. An exception to the above requirements shall be made wherever drainage conditions may require flush grade.

B. Soil Preparation:

1. Prior to planting, Contractor shall obtain soils test from certified soil testing lab and send copy to Architect. Commercial fertilizer shall be as per recommendations of soils lab. It shall be delivered to the site in bags labeled with manufacturer's guaranteed analysis. If stored at the site, fertilizer shall be protected from the elements prior to use.

2. Organic Soil Amendment (OSA): Shall be nitrogenized fine grained Redwood sawdust, or approved equal. The Contractor shall submit samples to the Architect for review prior to ordering of material. Particle size, mix proportions, Ph, and salinity content shall conform to manufacturer's literature.

3. Backfill Mix for Shrubs and Trees: Shall consist of 70% native soil excavated from the planting holes (free of rock/debris 1 inch or greater in size), 30% nitrogenized redwood sawdust (OSA), and the following additional amendments:

**Soil Amendments**

| Container Size | Soil Fertility |
|---|---|
| 1. Shrubs (1, 5, & 15 gallon) | 1. As per soils lab recommendation |
| 2. Trees (5 & 15 gallon & 24" box) | 2. As per soils lab recommendation |

4. Using a rotary-cultivator, thoroughly till three inches of OSA a minimum of two passes of all planting areas six inches deep in two directions 90 degrees to each other. Rake entire area to remove clods and stones over one inch in diameter, and sticks, etc. Maintain adequate distance from mud sills in accordance with local codes.

C. Planter Preparation

1. Excavate planter areas and tree wells in paved interior to a depth of 10" or below paving base rock, which ever is deeper.

2. Dispose of all base rock from planter areas off site.

3. Back fill planters with top soil. Submit source and sample to Architect prior to installation.

4. Back fill into existing sub soil to a depth of 6" to create a transitional layer of soil.

5. Water down and lightly compact topsoil to remove air pockets and achieve specified grade.

## 3.2 SHRUB AND TREE PLANTING

A. Excavation of planting holes shall be a minimum of twice the depth and diameter of the plant root ball.

B. Sides and the bottom of the planting hole shall be thoroughly “broken up” and loosened so that no “auger slick” or compaction of soil exists.

C. Planting trees: minimum 1" per hour drainage from planting pit. If not achieved, notify Architect.

D. Fill holes with amended backfill mixture to the proper height to receive the plant and thoroughly tamp the mixture.

E. Lightly loosen the outer edge of the root ball soil and set the plant in the center of the hole.

F. Compact backfill mixture around root ball until 2/3 of the hole is filled, then water thoroughly.

G. Place remaining backfill in hole so that crown of plant is 1-1/2" to 2" above surrounding grade.

H. A four-inch-high water basin shall be constructed around each shrub and tree as per detail on the Plans (except when plant is located within turf area).

I. Each plant basin shall be mulched by applying nitrogenized redwood sawdust to a depth of two inches, evenly spread over the entire basin area and soaked thoroughly.

J. Trees to be planted in interior paved walkways as indicated on the drawings shall be planted with deep-root planters with perforated pipe and sock for aeration.

## 3.3 INSTALLATION OF TOP DRESSING

A. Following all plant material planting, refined raking of finish grades, application and watering-in of weed control treatment, all shrubs and/or ground cover areas shall be top dressed.

B. All top dressing will be “redwood chips”. Contractor shall submit samples to Owner 's Authorized Representative for review and appropriate action. Maximum chip size shall be 1/2" to 3/4" diameter of uniform color and consistency.

C. The Contractor shall spread the top dressing a minimum of 2 inches deep over all areas, and shall uniformly rake so as to create a smooth plane. Neat uniform appearance of all top dressing shall be maintained at all times and is solely the responsibility of the contractor.

## 3.4 STAKING AND GUYING TREES

A. Trees shall be staked as per details on the Drawings.

B. Tree stakes shall be treated Lodge Pole Pine: two, 2 inch in diameter, 10 feet long for 15 G.C./24" box size trees; 3 inch in diameter, 12 foot poles for 36 inch box or larger.

C. Trees shall be tied as per tree staking detail. Over-sized trees shall have 12' poles and two or more ties, as determined by the Architect.

D. Staking poles shall not interfere with the lateral branching of trees.

## 3.5 WEED CONTROL

A. Shrub and/or ground cover areas shall be weed-free with acceptable pre-emergent herbicide.

B. Prior to laying down of mulch, a letter stating that the work has been completed shall be signed and verified by the Architect and delivered by the Contractor to the Owner.

## 3.6 CLEAN-UP

A. After planting and irrigation operations have been completed, the Contractor shall remove trash, empty plant containers, and tools and equipment used in this work, or any other debris accumulated by the work, as specified herein, from the site of the work.

B. Scars, ruts, or other marks in the area caused by this work shall be repaired at the Contractor's expense, and the ground left in a neat and orderly condition throughout the site or work at no additional cost to the Owner. All hard surface paved areas shall be thoroughly cleaned.

## 3.7 FIELD OBSERVATIONS AND ACCEPTANCE

A. The Owner 's Authorized Representative shall perform at least two project field observations upon completion of each phase of the work. Field observations shall be arranged by the Contractor by notification to the Owner 's Authorized Representative two days prior to field observation date.

1. The first field observation shall take place upon completion of the designated maintenance period. Discrepancies noted by the Owner 's Authorized Representative must be corrected and written notice of completion of remedial work delivered to the Owner prior to the next field observation.

2. The second field observation will take place upon completion of all remedial work. If the job is satisfactory and to the best of the Owner 's Authorized Representative's knowledge, information, and belief, that the work is carried out in general conformance with the Plans, Specifications, and Contract, and general design intent, a written notice of final review shall be prepared by the Owner 's Authorized Representative and submitted for stage approval to the Owner, prior to termination of the maintenance period and stage acceptance. The Owner shall issue stage acceptance to the Contractor.

B. If the job is **NOT** satisfactory, the Contractor shall continue the maintenance period at no cost to the Owner until stage acceptance by the Owner has been issued.

C. Irrigation:

1. Field observation of final pressure rating of mainline testing and observation of pressurized lateral line tests.

2. Field observation of irrigation coverage test.

3. Field observation of overall irrigation system operation and compliance with the plans and installation procedures as specified herein.

D. Planting:

1. Field observation of final finish grading to review drainage and general appearance before planting.

2. Field observation of plants in containers prior to planting.

3. Field observation of plant locations to review general conformance with the Plans and planting procedures as specified herein.

## 3.8 MAINTENANCE

A. It shall be the sole responsibility of the Contractor to maintain grades, planting, and irrigation as specified herein through stage acceptance by the Owner and review by the Owner 's Authorized Representative. Maintenance shall include responsibility for losses due to neglect or vandalism, and continue for a full 60 calendar days initiating after the job is fully completed and written notice of start of maintenance is received from the Owner.

B. Finish grade shall be maintained to facilitate run-off with silt build-up at back of walk and headers removed.

C. Irrigation system to be checked minimum once a week, heads lowered or raised as needed. Leaks, damage, and/or settling shall be repaired immediately.

D. Plantings shall be weeded, fertilized, cultivated, sprayed, and pruned as necessary to produce a healthy plant specimen.

E. Irrigation shall be checked, heads adjusted for coverage and over-spray, no water on buildings, walks, parking areas, etc. Controller shall be labeled to location of valves per Irrigation Plans.

F. Guarantee of planting and irrigation for one calendar year shall commence at the time of stage acceptance by Owner or Authorized Representative.

## 3.9 GUARANTEE PERIOD

A. The guarantee period will commence upon issuance of stage acceptance by the Owner to the Contractor at the termination of the maintenance period.

B. Planting Guarantee

1. The Contractor will guarantee the planting (as specified herein) for a period of one calendar year. The signing of the Contract for work is considered as the written guarantee to carry out this provision.

2. Plant material which is lost due to improper planting or plant diseases or pests which were present at the time of the start of the guarantee period shall be replaced by the Contractor at no cost to the Owner.

C. Completion of Guarantee Period and Final Acceptance

1. A final field observation will take place upon completion of the designated guarantee period.

2. Discrepancies noted by the Owner's Authorized Representative, which are a direct cause of the Contractor's work as shown on the Plans and specified herein, shall be made correct and complete to the satisfaction of the Owner, at no additional cost to the Owner.

**END OF SECTION**

# Division 33:
# Utilities

# SECTION 331000 - WATER UTILITIES

## 1.00 - GENERAL

1.01 SECTION INCLUDES

A. Pipe and fittings for site water line including domestic water line and fire water line.

B. Valves and back flow preventer.

1.02 RELATED SECTIONS

A. Section 312213 - Excavating.

B. Section 312 33- Backfilling.

C. Section 312317 - Trenching.

D. Plumbing Piping – See Drawings

1.03 REFERENCES

A. ANSI/ASTM D1557 - Test Methods for Moisture-Density Relations of Soils and Soil-Aggregate Mixtures Using 10 lb (4.54 Kg) Rammer and 18 inch (457 mm) Drop.

B. ANSI/AWWA C104 - Cement-Mortar Lining for Ductile-Iron Pipe and Fittings for Water.

C. ANSI/AWWA C105 - Polyethylene Encasement for Ductile Iron Piping for Water and Other liquids.

D. ANSI/AWWA C111- Rubber-Gasket Joints for Ductile Iron and Grey-Iron Pressure Pipe and Fittings.

E. ANSI/AWWA C151 - Ductile-Iron Pipe, Centrifugally Cast in Metal Molds or Sand-Lined Molds, for Water or Other Liquids.

F. ANSI/AWWA C509 - Resilient Seated Gate Valves 3 in through 12 in NPS, for Water and Sewage Systems.

G. ANSI/AWWA C600 - Installation of Ductile-Iron Water Mains and Appurtenances.

H. ANSI/AWWA C900 - Standard for Polyvinyl Chloride (PVC) Pressure Pipe, 4 inch through 12 inch, for Water.

I. ASTM D2241 - Poly Vinyl Chloride (PVC) Plastic Pipe(SDR-PR).

J. ASTM D3139 - Joints for Plastic Pressure Pipes using Flexible Elastomeric Seals.

K. AWWA C901 - Polyethylene (PE) Pressure Pipe, Tubing, and Fittings, 1/2 inch through 3 inch, for Water.

L. City Public Works Design stds. and std details (section 2).

1.04 PROJECT RECORD DOCUMENTS

A. Accurately record actual locations of piping mains, valves, connections, and invert elevations.

B. Identify and describe unexpected variations to subsoil conditions or discovery of uncharted utilities.

1.05 QUALITY ASSURANCE

A. Perform Work in accordance with City standards.

B. Valves: Manufacturer's name and pressure rating marked on valve body.

1.06 DELIVERY, STORAGE, AND HANDLING

A. Deliver and store valves in shipping containers with labeling in place.

1.07 SCOPE OF WORK

A. All work shall conform to the City Standards.

**2.00 - PRODUCTS**

2.01 PIPE

A. Ductile Iron Pipe: ANSI/AWWA C151:

B. PVC Pipe: ANSI/AWWA C900 Class 150:

1. Fittings: ANSI/AWWA C111, cast iron.
2. Joints: ASTM D3139 compression gasket ring.
3. Trace Wire: Magnetic detectable conductor, plastic covering, imprinted with "Water Service" in large letters.

C. Polyethylene Pipe: AWWA C901:

1. Fittings: AWWA C901, molded or fabricated.
2. Joints: Compression.
3. Trace Wire: Magnetic detectable conductor, plastic covering, imprinted with "Water Service" in large letters.

2.02 GATE VALVES - Up to 3 Inches (75 mm):

A. Manufacturers: Muller or approved equal.

B. Brass or Bronze body, non-rising stem, inside screw, single wedge or disc, compression ends, with control rod, post indicator, extension box and valve key.

2.03 GATE VALVES - 3 Inches (75 mm) and Over

A. Manufacturers: Muller or approved equal.

B.. ANSI/AWWA C509, Iron body, bronze trim, non-rising stem with square nut, single wedge, resilient seat, flangedends, control rod, and extension box .

2.04 ACCESSORIES

A. Concrete for Thrust Blocks: Per City standards.

B. Backflow Preventer: Per City Standards.

C. Meter: Per City standards.

**3.00 - EXECUTION**

3.01 EXAMINATION

A. Verify existing conditions

B. Verify that building service connection and municipal utility water main size, location and invert are as indicated.

3.02 PREPARATION

A. Ream pipe and tube ends and remove burrs.

B. Remove scale and dirt, on inside and outside, before assembly.

C. Prepare pipe connections to equipment with flanges or unions.

3.03 BEDDING

A. Excavate pipe trench in accordance with City standards for work of this Section. Hand trim excavation for accurate placement of pipe to elevations indicated.

B. Place bedding material at trench bottom, level fill materials in one continuous layer not exceeding 8 inches (200 mm) compacted depth.

C. Backfill around sides and to top of pipe with fill, tamped in place and compacted.

D. Maintain optimum moisture content of bedding material to attain required compaction density.

3.04 INSTALLATION - PIPE

A. Maintain separation of water main from sewer piping in accordance with City standards.

B. Install ductile iron piping and fittings to ANSI/AWWA C600.

C. Install pipe to allow for expansion and contraction without stressing pipe or joints.

D. Form and place concrete for thrust blocks at each elbow or change of direction of pipe main.

E. Establish elevations of buried piping to ensure not less than 3 ft. of cover in the public right of ways and a minimum 2.5 ft. onsite.

F. Install trace wire continuous over top of pipe.

G. Backfill trench in accordance with Section 312333.

3.05 INSTALLATION - VALVES AND HYDRANTS

A. Set valves on solid bearing.

B. Center and plumb valve box over valve. Set box cover flush with finished grade.

3.06 SERVICE CONNECTIONS

A. Provide water service to City standards with reduced pressure backflow preventer and water meter with by-pass valves with sand strainer.

3.07 FIELD QUALITY CONTROL

A. Field inspection and testing will be performed

B. Compaction testing will be performed in accordance with ANSI/ASTM D1557.

C. If tests indicate Work does not meet specified requirements, remove Work, replace and retest at no cost to Owner.

D. Frequency of Tests: As directed by the City Engineer.

**END OF SECTION**

# SECTION 334000 - STORM DRAINAGE

## PART 1 - GENERAL

1.01 SECTION INCLUDES

A. Site storm sewerage drainage piping, fittings and accessories.

B. Connection of building storm water drainage system to City storm drain.

C. Catch basins, paved area drainage and Site surface drainage.

1.02 RELATED SECTIONS

A. Section 312317- Trenching: Excavating for sewer system piping.

B. Section 312317- Trenching: Backfilling over piping up to subgrade elevation.

1.03 REFERENCES

A. ANSI/ASTM C443 - Joints for Circular Concrete Sewer and Culvert Pipe, Using Rubber Gaskets.

B. ANSI/ASTM D1557 - Test Methods for Moisture-Density Relations of Soils and Soil-Aggregate Mixtures Using 10 lb (4.54 Kg) Rammer and 18 inch (457 mm) Drop.

C. ANSI/ASTM D3034 - Poly (Vinyl Chloride) (PVC) (SDR-26) Sewer Pipe and Fittings.

D. All work to be done to Section 4 (sewers) of the City of Morgan Hill standard Spec.

1.04 DEFINITIONS

A. Bedding: Fill placed under, beside and directly over pipe, prior to subsequent backfill operations.

1.05 PROJECT RECORD DOCUMENTS

A. Accurately record actual locations of pipe runs, connections, catch basins, cleanouts and invert elevations.

B. Identify and describe unexpected variations to subsoil conditions or discovery of uncharted utilities.

1.06 REGULATORY REQUIREMENTS

A. Conform to City standards for materials and installation of the Work of this section.

1.07 FIELD MEASUREMENTS

A. Verify that field measurements and elevations are as indicated.

1.08 COORDINATION

A. Coordinate the Work with termination of storm sewer connection outside building, connection to City storm sewer and trenching.

**2.00 - PRODUCTS**

2.01 SEWER PIPE MATERIALS

A. Reinforced Concrete Pipe: ANSI/ASTM C76, Class III & V; mesh reinforcement; inside nominal diameter of 12 to 24 inches , bell and spigot end joints.

B. Reinforced Concrete Pipe Joint Device: ANSI/ASTM C443, rubber compression gasket joint. *A3

C. Plastic Pipe: ANSI/ASTM D3034, (SDR-35) Poly Vinyl Chloride material; inside nominal diameter of 6 inches, bell and spigot style rubber ring sealed gasket joint.

2.02 CATCH BASINS

A. Lid and Frame: As shown on City standard details and Civil Plan.

B. Shaft Construction and Cone Top Section: As shown on plans.

**3.00 - EXECUTION**

3.01 EXAMINATION

A. Verify that excavation base is ready to receive work and excavations, dimensions, and elevations are as indicated on drawings.

3.02 PREPARATION

A. Hand trim excavations to required elevations. Correct over excavation with course aggregate.

B. Remove large stones or other hard matter which could damage piping or impede consistent backfilling or compaction.

3.03 BEDDING

A. Excavate pipe trench in accordance with Section 312317 for work of this section. Hand trim excavation for accurate placement of pipe to elevations indicated.

B. Place bedding material at trench bottom, level materials in continuous layer not exceeding 8 inches compacted depth.

C. Maintain optimum moisture content of bedding material to attain required compaction density.

3.04 INSTALLATION - PIPE

A. Lay pipe to slope gradients noted on layout drawings.

3.05 INSTALLATION - CATCH BASINS AND CLEANOUTS

A. Form bottom of excavation clean and smooth to correct elevation.

B. Form and place cast-in-place concrete base pad, with provision for storm sewer pipe end sections.

C. Level top surface of base pad to receive concrete shaft sections, sleeved to receive storm sewer pipe sections.

D. Establish elevations and pipe inverts for inlets and outlets as indicated.

E. Mount lid and frame level in grout, secured to top cone section to elevation indicated.

3.06 FIELD QUALITY CONTROL

A. Field inspection will be performed

B. Request inspection prior to placing aggregate cover over pipe.

C. Compaction testing will be performed in accordance with ANSI/ASTM D1557.

D. If tests indicate Work does not meet specified requirements, remove Work, replace and retest.

3.07 PROTECTION

A. Protect pipe and aggregate cover from damage or displacement until backfilling operation is in progress.

**END OF SECTION**

January 15, 2019
Project PA18.1042.00

Yat Cho
City of Morgan Hill
17575 Peak Avenue
Morgan Hill, California 95037

**Subject: Geotechnical Update, Proposed Morgan Hill Centennial Recreation Center Expansion, 171 West Edmundson Avenue, Morgan Hill, California**

Dear Mr. Cho,

This letter presents our updated geotechnical findings, conclusions, and recommendations for the proposed Morgan Hill Centennial Recreation Center (CRC) Expansion project. In November 2003, our firm (formerly as Pacific Geotechnical Engineering) prepared a geotechnical investigation report for the original Centennial Recreation Center project. Our representatives also observed and tested during earthwork and foundation construction of the original center. The following documents were previously prepared by our firm for the CRC project.

- A report titled "Geotechnical Investigation, Morgan Hill Recreational Center, Edmundson Avenue, Morgan Hill, California," dated November 24, 2003

- A letter titled "Backfill of Storm Drain Excavation next to Foundation, New Indoor Recreation Center Building, Morgan Hill Indoor Recreation Center, 171 West Edmundson Avenue, Morgan Hill, California," dated September 19, 2005

- A letter titled "Foundation Excavations for new Indoor Recreation Center Building, Morgan Hill Indoor Recreation Center, 171 West Edmundson Avenue, Morgan Hill, California," dated September 2, 2005

- A letter titled "Storm Drain Excavations for New Indoor Recreation Center Building, Morgan Hill Indoor Recreation Center, 171 West Edmundson Avenue, Morgan Hill, California," dated August 24, 2005

- A letter titled "Field Density Testing Report, Morgan Hill Indoor Recreation Center, 171 West Edmundson Avenue, Morgan Hill, California," dated July 5, 2005

## 1. PROPOSED PROJECT

The project will involve construction of an approximately 4,000-square-foot building expansion in the southeastern portion of the existing CRC building. Other improvements will include two new parking lots, a stormwater basin expansion, underground utilities, exterior flatwork, and

landscaping. The stormwater basin expansion will be located east of the existing basin on the east side of the existing CRC building. One of the new parking lots will be located southeast of the CRC expansion building and the other new parking lot will be located east of the existing parking lot north of the existing CRC building.

Our review of the preliminary grading plans for the project indicates construction of the new building pad for the CRC expansion would require about 1 foot of cuts and fills. Construction of new parking lots would require ab out 1 to 2 feet of cuts and fills.

## 2. INFORMATION PROVIDED

The following information was provided to us for this study.

1. Sheet A1.0 (Overall Site Plan), Sheet A1.1 (Existing and Demo Site Plan), and Sheet A1.2 (Enlarged Site Plan), prepared by Weston Miles Architect, dated July 5, 2018.

2. Sheet C1.0 (Site Topography Map and Demo Plan), Sheet C1.1 (Grading & Utility Plan, Site Improvements North), and Sheet C1.2 (Grading & Utility Plan, Site Improvements South), prepared by MH Engineering Company, dated June 25, 2018.

## 3. PURPOSE AND SCOPE OF SERVICES

The purpose of our work was to update our 2003 geotechnical report, in particular the California Building Code (CBC) seismic design parameters, liquefaction assessment, and geotechnical recommendations for the proposed additions. The following work was performed for this geotechnical update.

1. Performed a site reconnaissance to observe existing site surface conditions.

2. Reviewed our 2003 geotechnical report and other documents related to the CRC project.

3. Collected 2 bulk soil samples from the proposed parking lot areas.

4. Performed laboratory R-value tests on the bulk samples.

5. Developed the seismic design parameters and peak ground acceleration based on the 2016 CBC requirements.

6. Performed a liquefaction assessment based on the current building code peak ground acceleration value.

7. Updated our geotechnical recommendations for the CRC expansion.

8. Prepared this geotechnical update letter.

## 4. FINDINGS

### 4.1 Site Surface Conditions

The site of the proposed CRC building addition is in the southeastern portion of the existing CRC building. Ground surface across the project area is essentially flat-lying and covered with grass.

The site of the southern proposed parking lot is currently vacant, generally flat-lying, and covered with bark. The site of the northern proposed parking lot is also vacant, generally flat-lying, and covered with bark with local trees and overhead solar power arrays.

### 4.2 Anticipated Subsurface conditions

No subsurface exploration was performed for this update. The information below is based on subsurface exploration performed during our 2003 geotechnical investigation which included a total of nine exploratory drill holes (DH-1 through DH-9). Drill hole DH-2 was located close to the proposed CRC expansion area. The depths mentioned below are in reference to the existing ground surface at the time of our exploration in October 2003.

In drill hole DH-2, a layer of very stiff lean clay of low plasticity was encountered to a depth of about 3 feet below ground surface (bgs). This lean clay was underlain by very stiff clay with sand to the maximum explored depth of about 10 feet bgs.

Our drill hole DH-1 was advanced to a depth of about 40 feet bgs. In this hole, the upper soils consist of layers of very stiff to hard clay, sandy silty clay, and sandy lean clay to a depth of about 17.5 feet bgs. These clays were underlain by a layer of hard fat clay to a depth of about 29 feet bgs, and dense to very dense clayey sand and clayey sand with gravel to the maximum explored depth of 40 feet bgs.

### 4.3 Groundwater

Groundwater was reported in DH-1 at a depth of about 27 feet at the time of our drilling in October 2003. About 6 hours later, the groundwater level rose to about 24 feet bgs.

Our review of regional information on depth to first groundwater from the Santa Clara Valley Water District website indicates that shallowest groundwater in the area as of 2003 could be between 0 and 10 feet bgs.

It should be noted that fluctuations in the groundwater level may occur due to seasonal variations in rainfall and temperature, pumping from wells, regional groundwater recharge program, irrigation, or other factors that were not evident at the time of our investigation.

## 4.4 Variations in Subsurface Conditions

Our interpretations of soil and groundwater conditions, as described in this letter, are based on data obtained from our 2003 subsurface exploration and laboratory testing. Our conclusions and geotechnical recommendations are based on these interpretations. The project site has undergone previous development and grading, therefore, it is likely that undisclosed variations in subsurface conditions exist at the site, such as old foundations, abandoned utilities, and areas of deep and loose fill.

Careful observations should be made during construction to verify our interpretations. Should variations from our interpretations be found, we should be notified to evaluate whether any revisions should be made to our recommendations.

## 4.5 Seismic Sources

The San Francisco Bay Area is seismically dominated by the active San Andreas Fault system, the tectonic boundary between the northward moving Pacific Plate (west of the fault) and the North American Plate (east of the fault). This movement is distributed across a complex system of generally strike-slip, right-lateral, subparallel faults.

Regional faults that have a potential to generate large magnitude earthquakes and significant ground shaking at the site are listed below. Map distances are derived from the USGS Quaternary Fault and Fold database (http://earthquake.usgs.gov/regional/qfaults/).

**Table 1: Name, Distance and Orientation of Earthquake Faults from Site**

| Fault Name | Approximate Distance (km) | Orientation from Site |
|---|---|---|
| Calaveras (central section) | 7 km | Northeast |
| Sargent | 10½ km | Southwest |
| San Andreas (Santa Cruz Mts.) | 14 km | Southwest |
| San Gregorio | 54 km | Southwest |

The project site is not located within a Santa Clara County Fault Rupture Hazard zone.

## 4.6 Ground Motions and Seismicity

According to the 2016 CBC and ASCE 7-10, the spectral response acceleration at any period can be taken as the lesser of the spectral response accelerations from the probabilistic and deterministic ground motion approaches. We used the US Seismic Design Maps Application at the United States Geological Survey (USGS) website to determine the seismic design parameter values for design of buildings at the subject site. Two levels of ground motions are considered in the Application: Risk-targeted Maximum Considered Earthquake ($MCE_R$) and Design Earthquake (DE), with both probabilistic and deterministic values defined in terms of maximum-direction rather than geometric-mean, horizontal spectral acceleration. The probabilistic $MCE_R$

spectral response accelerations are represented by a 5 percent damped acceleration response spectrum having a 1 percent probability of collapse within a 50-year period and in the direction of the maximum horizontal response. The probabilistic Design Earthquake (DE) $S_a$ value at any period can be taken as two-thirds of the $MCE_R$ $S_a$ value at the same period.

Using the Seismic Design Maps application available from the California Structural Engineers Association website, the latitude and longitude of the site (latitude 37.113217$^o$N, longitude -121.645713$^o$W), and a Site Class C, the calculated geometric mean peak ground acceleration adjusted for site class effects ($PGA_M$) is 0.56g for the $MCE_G$ (Geometric Mean Maximum Considered Earthquake). $PGA_M$ is for use in evaluation of soil liquefaction, lateral spreading, seismic settlements, and other soil issues per ASCE 7-10. A Site Class C was used based on regional USGS data and subsurface information from our 2003 drill holes.

The Working Group on California Earthquake Probabilities' (WGCEP) estimates of the probabilities of major earthquakes are now in their sixth iteration, with the greatest changes in approach being the inclusion of multi-fault rupture scenarios, in the progressive consideration of more potential seismic sources, the possibility of earthquakes on unrecognized faults, and the inclusion of the notion of fault "readiness". Current estimates (WGCEP, 2014) for the San Francisco region indicate a 72% probability of a large (magnitude 6.7 or greater) earthquake in the San Francisco Bay area as a whole over the 30-year period beginning in 2014; this overall probability is greater than the previous (WGCEP, 2007) probability of 63%, due mainly to the inclusion of multi-fault rupture scenarios. The estimate for the Calaveras fault alone is 14.4% (revised up from the 7% presented by WGCEP, 2007); for the (northern) San Andreas fault alone, 27.4% (revised upward from the WGCEP (2007) value of 21%); and for the Hayward fault, 45.3% (revised upward from the WGCEP (2007) value of 31%).

## 4.7 Liquefaction

Soil liquefaction is a phenomenon in which saturated granular soils, and certain fine-grained soils, lose their strength due to the build-up of excess pore water pressure during cyclic loading, such as that induced by earthquakes. Soils most susceptible to liquefaction are saturated, clean, loose, fine-grained sands and non-plastic silts. Certain gravels, plastic silts, and clays are also susceptible to liquefaction. The primary factors affecting soil liquefaction include: 1) intensity and duration of seismic shaking; 2) soil type; 3) in-place relative density of granular soils; 4) moisture content and plasticity of fine-grained soils; 5) overburden pressure; and 6) depth to ground water.

The project site is not located in a Santa Clara County Liquefaction Hazard zone. Therefore, the potential for liquefaction at the site is considered to be low. This is reasonable because cohesive clayey soils were encountered below ground surface to a depth of about 29 feet and dense to very dense clayey sand was encountered from 29 to 40 feet bgs.

### 4.8 Seismic Design Parameters

The following site coefficients and seismic ground motion parameters are developed using the USGS Seismic Design Maps Application, the latitude and longitude of the site, and a Site Class C based on regional USGS information and data from our 2001 drill holes.

| Parameter | Value - ASCE 7 |
|---|---|
| Site Class | C |
| Site Coefficient $F_a$ | 1.0 |
| Site Coefficient $F_v$ | 1.3 |
| $S_s$ | 1.5g |
| $S_1$ | 0.6g |
| $S_{Ms}$ | 1.5g |
| $S_{M1}$ | 0.78g |
| $S_{Ds}$ | 1.0g |
| $S_{D1}$ | 0.52g |

## 5. CONCLUSIONS AND DISCUSSION

### 5.1 Surface Fault Rupture

Because the project site is not located in a State of California Earthquake Fault Zone or a Santa Clara County Fault Rupture Hazard zone and no mapped active faults are known to cross the site, the probability of ground surface rupture at the project site is low.

### 5.2 Seismic Ground Shaking

The project site is located in an area of high seismicity. Based on general knowledge of the site seismicity, it should be anticipated that, during their useful life, the proposed additions will be subject to at least one severe earthquake (magnitude 7 to 8+) that could cause considerable ground shaking at the site. It is also anticipated that the site will periodically experience small to moderate magnitude earthquakes.

### 5.3 Soil Expansion Potential

The results of an Atterberg Limits test performed during our 2003 investigation on a sample of the near-surface soil in DH-1 at the CRC site indicate the soil has a low plasticity which generally corresponds to low expansion potential. Therefore, the potential for soil expansion to affect the building foundation and slab is low.

## 5.4 Compressible Soils

The subsurface soils encountered in our 2003 drill holes consisted of stiff to hard clays and medium dense to very dense sands. Compressibility of these soils is generally low for the anticipated loads of the proposed building addition.

## 5.5 Potential Differential Settlements between Addition and Existing Building

The existing CRC building was constructed around 2005 on shallow footing foundations. For the last 13 to 14 years, the existing building should have gone through settlement under the existing building loads. The CRC addition will experience settlement under its own building loads. If the CRC expansion is structurally connected to the existing building, there is a potential for differential settlement between the addition and the existing building which may cause distress and damage, such as cracking and separation, between the new and existing structures.

If the potential for differential settlement between the addition and the existing building is acceptable to the owner, the addition may be constructed on conventional footing foundations. If it is desirable to reduce the potential differential settlement between the building addition and the existing CRC building, consideration should be given to supporting the addition on drilled pier foundations. Recommendations for foundation design are provided in the following sections.

# 6. RECOMMENDATIONS

The following recommendations are for design and construction of the proposed CRC building expansion project. These recommendations supersede those in our 2003 report.

## 6.1 Earthwork

### 6.1.1 Clearing and Stripping

Site clearing should include removal of designated deleterious materials, debris, and obstructions, including designated structures, foundations, concrete slabs, pavements, utilities, and landscaping. Stumps and primary roots of trees and brush, where present, should be removed. Roots about 1 inch or larger in diameter or about 3 feet or longer in length should be removed. Depressions, voids, and holes that extend below proposed finish grade should be cleaned and backfilled with engineered fill compacted to the recommendations below. The backfill operations should be observed and tested by the project Geotechnical Engineer.

Surface vegetation should be stripped to sufficient depth to remove the vegetation and organic-laden topsoil. Organic laden soils are defined as soils with more than 3 percent by weight of organic content. Stripped material may be stockpiled for use in future landscape areas if approved by the project landscape architect; otherwise, it should be removed from the

site. For planning purposes, an average stripping depth of 3 inches may be assumed in vegetation areas. The actual stripping depth should be determined by the Geotechnical Engineer at the time of construction.

### 6.1.2 Excavations and Temporary Construction Slopes

Excavations for this project are expected to include demolition excavations, cuts to achieve design grades, trenching to construct new underground utilities, and foundation excavations. Excavation walls in clayey soil and less than 5 feet in height should be able to stand near vertical with minimal bracing, provided proper moisture content in the soil is maintained. Granular soils, with little or no cohesion, will require more extensive bracing or laying back because they are prone to sudden collapse. Excavations and temporary construction slopes should be constructed in accordance with the current CAL-OSHA safety standards and local jurisdiction. The stability and safety of excavations, braced or unbraced, is the responsibility of the contractor.

Trench excavations adjacent to existing or proposed foundations should be above an imaginary plane having an inclination of 1½:1 (horizontal to vertical) extending down from the bottom edge of the foundations.

### 6.1.3 Over-excavation and Re-compaction of Surface Soil

After clearing and stripping, areas to receive engineered fills, foundations, concrete slabs-on-grade, and pavements should be over-excavated to a depth of at least 1 foot below the stripped surface ground surface. The soil surface exposed by over-excavation should be properly prepared as recommended below under "Subgrade Preparation." After the subgrade has been prepared, the excavation may be raised to design grade with engineered fill.

### 6.1.4 Subgrade Preparation

Subgrade soil in areas to receive engineered fills, foundations, concrete slabs-on-grade, and pavements should be scarified to a depth of at least 12 inches, moisture-conditioned, and compacted to the recommendations given under the "Engineered Fill Placement and Compaction" section below. Prepared soil subgrades should be non-yielding. Subgrade preparation should extend at least 5 feet beyond the building addition limits and at least 3 feet beyond the limits of the pavement areas unless it is restricted by existing structures or improvements.

Moisture conditioning of subgrade soil should consist of adding water if the soil is too dry or allowing the soil to dry if the soil is too wet. After the subgrades are properly prepared, the areas may be raised to design grades by placement of engineered fill.

Soil with moisture content above optimum value should be anticipated in unpaved areas, under existing pavements and concrete slabs, during and after the rainy months. Unstable, wet or

soft soil will require processing before compaction can be achieved. If construction schedule does not allow for air-drying, other means such as lime or cement treatment of the soil or excavation and replacement with suitable material may be considered. Geotextile fabrics or geogrids may also be used to help stabilize the subgrade. The method to be used should be determined at the time of construction based on the actual site conditions. We recommend obtaining unit prices for subgrade stabilization during the construction bid process.

#### 6.1.5 Materials for Engineered Fills

In general, on-site soils with an organic content of less than 3 percent by weight, free of any hazardous, debris or deleterious materials, and meeting the gradation requirements below may be used as engineered fill to achieve project grades, except when special material (e.g. capillary break material) is required.

In general, engineered fill material should not contain rocks or lumps larger than 3 inches in greatest dimension, should not contain more than 15 percent of the material larger than 1½ inches, and should contain at least 20 percent passing the No. 200 sieve. In addition to these requirements, import fills should have a low expansion potential as indicated by Plasticity Index of 15 or less, or Expansion Index of less than 20.

All import fills should be approved by the project Geotechnical Engineer prior to delivery to the site. At least five (5) working days prior to importing to the site, a representative sample of the proposed import fill should be delivered to our laboratory for evaluation.

#### 6.1.6 Engineered Fill Placement and Compaction

Engineered fill should be placed in horizontal lifts each not exceeding 8 inches in loose thickness, moisture conditioned to the required moisture content, and mechanically compacted to the recommendations below. Relative compaction or compaction is defined as the in-place dry density of the compacted soil divided by the laboratory maximum dry density as determined by ASTM Test Method D1557, latest edition, expressed as a percentage. Moisture conditioning of soils should consist of adding water to the soils if they are too dry and allowing the soils to dry if they are too wet.

Engineered fills should be compacted to at least 90 percent relative compaction with moisture content between about 1 and 3 percent above the laboratory optimum value.

In pavement areas, the upper 6 inches of subgrade soil should be compacted to at least 95 percent relative compaction with moisture content between 1 and 3 percent above the optimum value. Aggregate base should be compacted at slightly above the optimum moisture content to a minimum of 95 percent relative compaction.

### 6.1.7 Utility Trench Backfill

Construction of underground utility trenches should comply with the City of Morgan Hill standards, latest edition. In general, pipe bedding, extending from the bottom of the trench to about 1 foot above the top of pipe, may consist of free-draining sand (less than 5% passing a No. 200 sieve), lean concrete or sand cement slurry. Sand bedding should be compacted to a minimum of 90 percent relative compaction.

Above the pipe bedding, utility trenches may be backfilled with on-site soil or imported soil. Trench backfill above the pipe bedding should be compacted to the requirements given in the section of "Engineered Fill Placement and Compaction." Trench backfill should be capped with at least 12 inches of compacted, on-site soil similar to that of the adjoining subgrade. The backfill material should be placed in lifts not exceeding about 6 inches in uncompacted thickness. Thinner lifts may be necessary to achieve the recommended level of compaction of the backfill due to equipment limitations. Compaction should be performed by mechanical means only. Water jetting or flooding to attain compaction of backfill should not be permitted.

For trenches crossing the building perimeter, the full depth of the trenches within 2 feet on both sides of the perimeter foundations should consist of compacted clayey soil to reduce the potential for water infiltrating to under the building.

### 6.1.8 Wet Weather Construction

If site grading and construction is to be performed during the winter rainy months, the owner and contractors should be fully aware of the potential impact of wet weather. Rainstorms can cause delay to construction and damage to previously completed work by saturating compacted pads or subgrades, or flooding excavations. The potential for high groundwater during and after the winter rainy months would also affect construction of the project.

Earthwork during rainy months will require extra effort and caution by the contractors who should be responsible to protect their work to avoid damage by rainwater. Standing water should be pumped out immediately. Construction during wet weather conditions should be addressed in the project construction bid documents and/or specifications. We recommend the grading contractor submits a wet weather construction plan outlining procedures they will employ to protect their work and to minimize damage to their work by rainstorms.

## 6.2 Building Foundations

Footing foundations may be used to support the CRC building addition if the addition is not structurally connected to the existing CRC building or if potential differential settlement between the CRC building addition and the existing CRC building is acceptable to the owner. A structural mat foundation should be used for support of the CRC building addition if the effects of potential differential settlement between the CRC building addition and the existing CRC building are to be reduced.

To maintain the desired support, the bottom of foundations adjacent to utility trenches or buried structures should be below an imaginary plane having an inclination of 1.5 horizontal to 1 vertical, extending upward from the bottom edge of the adjacent utility trenches or structures. If the foundations are closer than the recommended distance, the project Geotechnical Engineer should be consulted for recommendations.

### 6.2.1 Conventional Footings

Footings, continuous and isolated, may be used to support the proposed CRC addition. Footings should bear on undisturbed native soil and/or properly compacted engineered fill. Preparation of soil subgrade, moisture conditioning, and compaction of soil and engineered fill should be as recommended in the "Earthwork" section of this report.

Footings may be designed for a net allowable bearing pressure of 1,500 pounds per square foot due to dead plus live loads, with a one-third increase when including transient loads such as wind or seismic. The footing bottom should extend at least 18 inches below pad grade or lowest adjacent finish grade, whichever provides a deeper embedment. Footings should be at least 12 inches wide. Footings should be reinforced as designed by the Structural Engineer.

Resistance to lateral loads may be developed from a combination of friction between the bottom of foundations and the supporting subgrade, and by passive resistance acting against the vertical sides of the foundations. Footings bearing on native soil or engineered fill may be designed using an ultimate friction coefficient of 0.3 between the foundations and supporting subgrade, and an ultimate passive resistance of 300 pounds per cubic foot (pcf, equivalent fluid weight) acting against the embedded sides of the foundations. The passive pressure can be assumed to act starting at the top of the lowest adjacent grade in paved areas. In unpaved areas, the passive pressure can be assumed to act starting at a depth of 1 foot below grade. It should be noted that the passive resistance value discussed above is only applicable where the concrete is placed directly against undisturbed soil or engineered fills. Voids created by the use of forms should be backfilled with property compacted engineered fill or with concrete.

Total post-construction settlement of the foundations is anticipated to be up to about 3/4 inch, with up to about 3/8 inch of differential settlement over a distance of about 30 feet.

### 6.2.2 Drilled, Cast-in-place, Reinforced Concrete Piers

The proposed CRC addition may be supported on drilled, cast-in-place, reinforced concrete piers designed to derive their vertical supporting capacity from "skin friction" between the pier shafts and the surrounding earth materials. Piers should have a diameter of 12 inches or greater and should extend at least 8 feet below the ground surface. Center to center spacing of the piers should be a minimum of 3 pier diameters. Reinforcement in the piers should be determined by the structural engineer.

For dead plus live vertical loads, a net allowable adhesion value of 500 pounds per square foot may be assumed along the pier shafts. This value may be increased by one-third when including transient loads, such as wind or seismic. The upper 1 foot of the piers below lowest adjacent finish grade should be neglected when calculating vertical pier capacity. End bearing capacity should also be ignored.

Resistance to lateral loads may be calculated based on passive soil pressure acting against the piers. For dead plus live loads, the ultimate passive resistance in soil or engineered fill may be calculated using an equivalent fluid weight of 300 pounds per cubic foot acting on 2 times the pier diameter, for level ground surface in front of the piers in the direction of load application. The upper 1 foot of soil below lowest adjacent finish grade should be ignored in the calculation of passive pressure. It should be noted that passive resistance is only applicable where the concrete is placed directly against undisturbed soil or engineered fill.

Perimeter piers should be structurally tied with grade beams for the foundation to act as one structural unit. Grade beams should be designed to span between piers and should be embedded at least 12 inches below pad grade.

Prior to placement of reinforcing steel and concrete, the pier holes should be cleaned of loose soil and debris. If water is encountered in the pier holes, concrete should be placed using the "tremie" method to displace the water to the surface.

The Geotechnical Engineer should observe during drilling of the foundation piers to evaluate whether the pier holes are in suitable bearing material.

### 6.3 Concrete Slabs-on-grade

The building floor slab should be constructed on properly moisture-conditioned and compacted subgrade soil complying with recommendations in the "Earthwork" section above. Slab subgrades should be maintained in a moist condition prior to placement of slab concrete. Design of slab reinforcement, joint spacing, etc. is the responsibility of the structural engineer.

Interior concrete slabs-on-grade that will be covered with floor coverings or where vapor transmission through the slabs is undesirable should be underlain by at least 4 inches of capillary break material such as free-draining, clean drain rock or 3/8 inch pea gravel. A visqueen should be placed over the capillary break material. The visqueen should be a high quality polymer at least 10 mils thick that is resistant to puncture during slab construction. Typically, the membrane and the slab are separated by 2 inches of sand; but the use of sand should be determined by the project structural engineer.

A lower water-cement ratio (0.45 to 0.50) will also help reduce the permeability of the floor slab. It should be understood that the recommended plastic membrane is not intended to waterproof the concrete slab floor. If waterproofing is desired, the project designers and/or a flooring expert should be contacted.

## 6.4 Pavements

The two new parking lots are expected to accommodate primarily automobiles and light pickup trucks, with occasional heavy vehicles, such as delivery and garbage trucks. An R-value of 29 was measured on both bulk samples collected from the two parking lot areas. For design purposes, an R-value of 25 was used to calculate the pavement sections tabulated below using the Caltrans pavement section design procedures.

| DESIGN TRAFFIC INDEX | HOT MIX ASPHALT (inches) | CLASS 2 AGGREGATE BASE (inches) | TOTAL (inches) |
|---|---|---|---|
| 5.0 | 3.0 | 6.0 | 9.0 |
| 5.5 | 3.0 | 7.5 | 10.5 |
| 6.0 | 3.5 | 8.0 | 11.5 |
| 6.5 | 3.5 | 9.5 | 13.0 |
| 7.0 | 4.0 | 10.0 | 14.0 |

Pavement sections should be constructed on soil subgrades that have been prepared as outlined in the "Earthwork" section of this report. The upper 8 inches of soil subgrade in pavement areas should be compacted to a minimum of 95 percent relative compaction. The full section of aggregate base and aggregate subbase should be compacted to a minimum of 95 percent relative compaction. Evaluation of relative compaction should be based on ASTM D1557, latest edition. The Class 2 Aggregate Base material should conform to Section 26 of the Caltrans Standard Specifications and the Class 2 Aggregate Subbase material should conform to Section 25 of the Caltrans Standard Specifications.

## 6.5 Surface Drainage

Engineering design of grading and drainage at the site is the responsibility of the project Civil Engineer. We recommend the following for consideration by the project Civil Engineer.

Sufficient surface drainage should be provided to direct runoff away from structures, foundations, concrete slabs-on-grade, and pavements, and towards suitable collection and discharge facilities. Ponding of surface water should be avoided by establishing positive drainage away from all improvements. Water collected should be discharged at a suitable discharge point.

# 7. LIMITATIONS

In preparing the findings and professional opinions presented in this letter, Geo-Logic Associates (GLA) has endeavored to follow generally accepted principles and practices of the geotechnical engineering professions in the area and at the time our services were performed. No warranty, express or implied, is provided.

The conclusions and recommendations contained herein are based, in part, on information that has been provided to us. In the event that the general development concept or general location and type of structures are modified, our conclusions and recommendations shall not be considered valid unless we are retained to review such changes and to make any necessary additions or changes to our recommendations. To remain as the project geotechnical engineer-of-record, GLA must be retained to provide geotechnical services during construction of the project.

Should conditions different from those described in this letter be encountered during project development and construction, GLA should be consulted to review the conditions and determine whether our recommendations are still valid. Additional exploration, testing, and analysis may be required for such evaluation.

Should persons concerned with this project observe geotechnical features or conditions at the site or surrounding areas which are different from those described in this letter, those observations should be reported immediately to GLA for evaluation.

Sincerely,

**Geo-Logic Associates**

Chalerm (Beeson) Liang, GE 2031
Supervising Geotechnical Engineer

Attachments: Figure 1, Site Plan
Logs of DH-1, DH-6 and DH-8

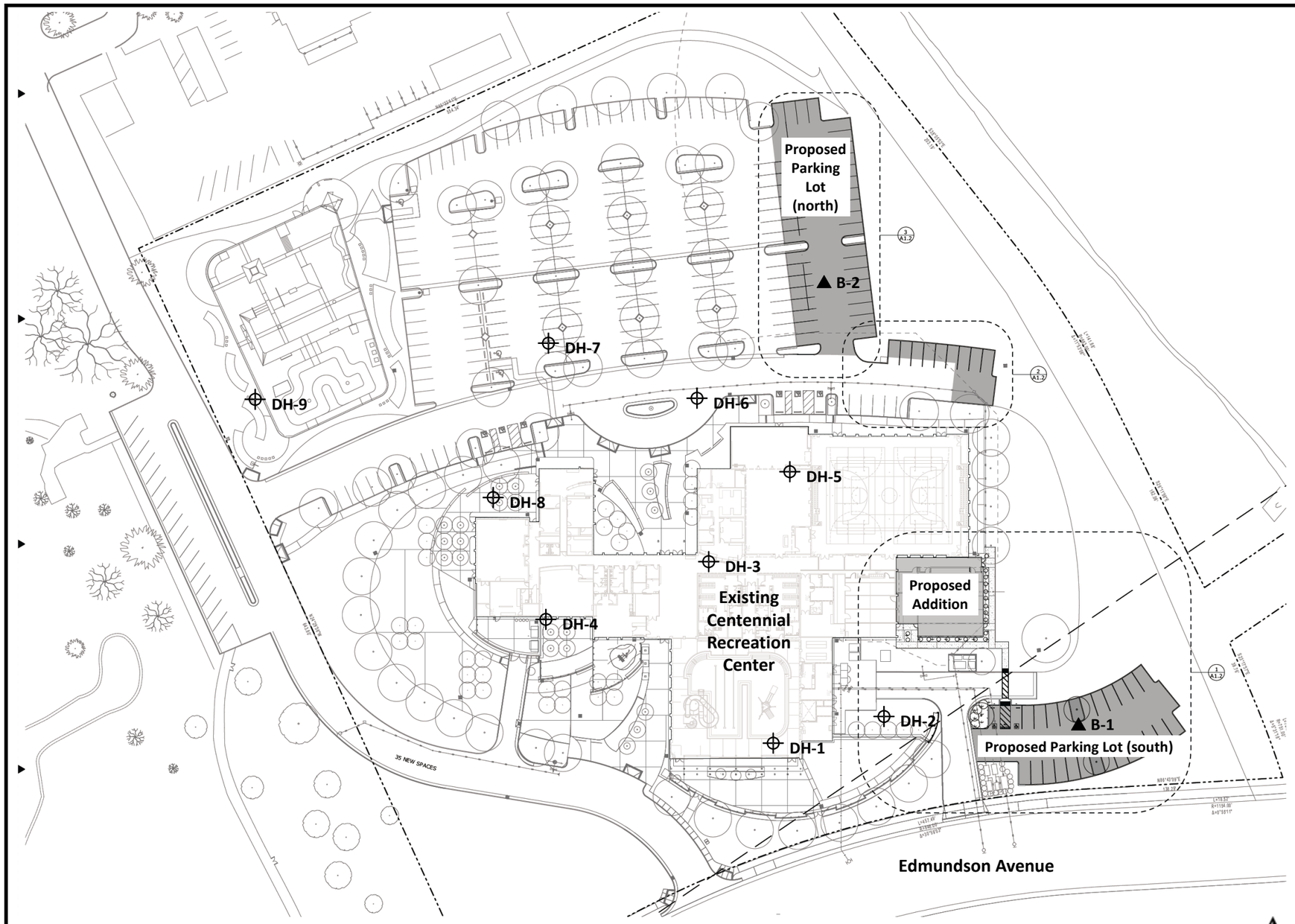


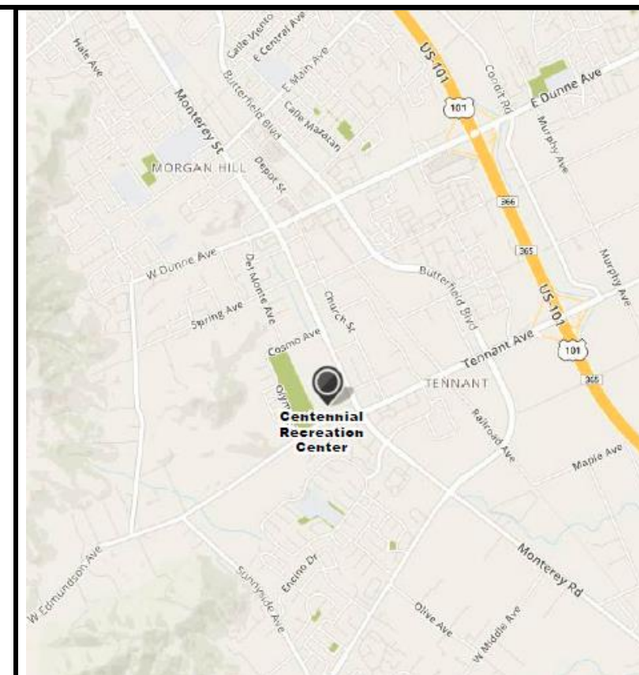


Vicinity Map (No Scale)

Legend

DH-9 Number & approximate location of exploratory drill hole (November 2003 investigation)

▲B-1 Number & approximate location of surface bulk sample (this investigation)

Base

Overall Site Plan, Centennial Recreation Center Expansion Project, City of Morgan Hill, 171 W Edmundson Ave., Morgan Hill, CA 95037, prepared by Weston Miles Architects, dated 7/5/2018.

Scale (feet)

0 30 60 90 120 150

N

| | | | | |
|---|---|---|---|---|
| Geo-Logic ASSOCIATES | 16055 Caputo Drive, Suite D<br>Morgan Hill, California 95037<br>Phone (408) 778-2818<br>Fax (408) 779-6879 | Drafted By:<br>Date:<br>Checked By:<br>Revision: | **SITE PLAN**<br>**MORGAN HILL CENTENNIAL RECREATION CENTER EXPANSION**<br>171 W Edmundson Avenue<br>Morgan Hill, California | **FIGURE**<br>1<br>**PROJECT**<br>PA18.1042 |

| DATE: 10/2/03 | LOG OF EXPLORATORY DRILL HOLE | DH - 1 |
|---|---|---|

**PROJECT NAME:** Morgan Hill Recreational Center **PROJECT NUMBER:** 1912E

**DRILL RIG:** Mobile B40 w/140lb Downhole Hammer w/Wire Winch **LOGGED BY:** CSS

**HOLE DIAMETER:** 8" Hollow Stem Auger **HOLE ELEVATION:** --

**SAMPLER:**
D = **Dames & Moore (3" O.D.)**
X = **Modified California (2.5" O.D.)**
I = **Standard Penetrometer (2" O.D.)**
"S" indicates slough in sampler

**GROUND WATER DEPTH:** **Initial** 27'@10:15AM **Final** 24'@ 4:30PM

| DESCRIPTION OF EARTH MATERIALS | SOIL TYPE | DEPTH (ft) | SAMPLE | BLOWS PER FOOT | POCKET PEN (tsf) | % PASSING #200 SIEVE | | LIQUID LIMIT | WATER CONTENT | PLASTICITY INDEX | DRY DENSITY (pcf) | FAILURE STRAIN (%) | UNCONFINED COMPRESSIVE STRENGTH (psf) |
|---|---|---|---|---|---|---|---|---|---|---|---|---|---|
| **ALLUVIUM: CLAY:** Dark grayish, brown (10YR 4/2), moist, hard, up to 10% fine sand | CI | 1 | SDD | 83 | >4.5 | 85 | | 25 | 8.5 | 7 | 101 | | |
| **SANDY SILTY CLAY:** Yellowish brown (10YR 5/6), damp, hard, 25-40% fine sand | CL-ML | 2 | | | | | | | | | | | |
| | | 3 | SDD | 45 | >4.5 | | | | | | | | |
| just below 3' moist, brown (10YR 4/3) | | 4 | | | | | | | 18 | | 110 | 5 | 20050 |
| **SANDY LEAN CLAY:** Streaky dark yellowish brown (10YR 4/4), w/yellowish brown (10YR 5/8) and grayish brown (10YR 5/2), moist, hard, 30-50% fine sand w/ minor medium sand | CL | 5 | | | | | | | | | | | |
| | | 6 | SDD | 82 | >4.5 | | | | | | | | |
| | | 7 | | | | | | | | | | | |
| | | 8 | | | | | | | | | | | |
| | | 9 | SII | 36 | | | | | | | | | |
| | | 10 | | | | | | | | | | | |
| | | 11 | | | | | | | | | | | |
| | | 12 | | | | | | | | | | | |
| | | 13 | | | | | | | | | | | |
| | | 14 | SDD | 51 | >4.5 | | | | | | | | |
| | | 15 | | | | | | | | | | | |
| | | 16 | | | | | | | | | | | |
| | | 17 | | | | | | | | | | | |
| **FAT CLAY W/SAND:** Dark yellowish brown (10YR 4/4), mottled w/ streaked yellowish brown (10YR 5/8)and grayish brown (10YR 5/2), moist, hard, 10-20% fine sand | CH | 18 | | | | | | | | | | | |
| | | 19 | SDD | 60 | >4.0-4.5 | | | | | | | | |
| | | 20 | | | >4.5 | | | | | | | | |

| DATE: 10/2/03 | LOG OF EXPLORATORY DRILL HOLE | DH - 1 |
|---|---|---|

**PROJECT NAME:** Morgan Hill Recreational Center **PROJECT NUMBER:** 1912E

**DRILL RIG:** Mobile B40 w/140lb Downhole Hammer w/Wire Winch **LOGGED BY:** CSS

**HOLE DIAMETER:** 8" Hollow Stem Auger **HOLE ELEVATION:** ---

**SAMPLER:** D = **Dames & Moore (3" O.D.)**; X = **Modified California (2.5" O.D.)**; I = **Standard Penetrometer (2" O.D.)**; "S" indicates slough in sampler

**GROUND WATER DEPTH:** **Initial** 27'@10:15AM; **Final** 24'@ 4:30PM

| DESCRIPTION OF EARTH MATERIALS | SOIL TYPE | DEPTH (ft) | SAMPLE | BLOWS PER FOOT | POCKET PEN (tsf) | % PASSING #200 SIEVE | | LIQUID LIMIT | WATER CONTENT | PLASTICITY INDEX | DRY DENSITY (pcf) | FAILURE STRAIN (%) | UNCONFINED COMPRESSIVE STRENGTH (psf) |
|---|---|---|---|---|---|---|---|---|---|---|---|---|---|
| **FAT CLAY:** Dark yellowish brown (10YR 4/4) mottled and streaked w/yellowish brown (10YR 5/8) and grayish brown (10YR 5/2), moist, very stiff to hard (Pocket Pen varies from 2.5-4.5 at 1" intervals on sample); feel silty on teeth and on hands, up to 5% fine sand | | 21 | | | | | | | | | | | |
| | | 22 | | | | | | | | | | | |
| | | 23 | | | | | | | | | | | |
| | | 24 | S | 34 | 4.0 | | | | | | | | |
| | | 25 | D | | 4.0 | 92 | | | 23 | | 104 | 10 | 5500 |
| | | 26 | S I I | 34 | 2.5 4.5 | | | | | | | | |
| | | 27 | | | | | | | | | | | |
| | | 28 | | | | | | | | | | | |
| gradational contact to | | | | | | | | | | | | | |
| **CLAYEY SAND:** Dark yellowish brown(10YR 4/6) with light grayish brown (10YR 6/2), moist, dense, variable fines from 30-50%, fine to medium sand | SC | 29 | S | 56 | | 46 | | | | | | | |
| | | 30 | D D | | | | | | | | | | |
| | | 31 | | | | | | | | | | | |
| | | 32 | | | | | | | | | | | |
| coarsens w/depth | | | | | | | | | | | | | |
| **CLAYEY SAND w/GRAVEL:** Brown(7.5YR 4/4), moist, very dense, up to 20% fines, fine to coarse sand, 10-30% subrounded gravel up to 1" diameter | SC | 33 | | | | | | | | | | | |
| | | 34 | S | 94 | | | | | | | | | |
| | | 35 | D D | | | 11 | | | | | | | |
| | | 36 | | | | | | | | | | | |
| | | 37 | | | | | | | | | | | |
| | | 38 | | | | | | | | | | | |
| | | 39 | S I I | 48 | | | | | | | | | |
| | | 40 | | | | | | | | | | | |
| **BOTTOM OF HOLE @ 40 FEET** No Ground Water Encountered | | | | | | | | | | | | | |

| DATE: 10/2/03 | LOG OF EXPLORATORY DRILL HOLE | DH - 6 |
|---|---|---|

**PROJECT NAME:** Morgan Hill Recreational Center **PROJECT NUMBER:** 1912E

**DRILL RIG:** Mobile B40 w/140lb Downhole Hammer w/Wire Winch **LOGGED BY:** CSS

**HOLE DIAMETER:** 8″ Hollow Stem Auger **HOLE ELEVATION:** --

**SAMPLER:**
D = **Dames & Moore (3" O.D.)**
X = **Modified California (2.5" O.D.)**
I = **Standard Penetrometer (2" O.D.)**
"S" indicates slough in sampler

**GROUND WATER DEPTH:** **Initial** --- **Final** ---

| DESCRIPTION OF EARTH MATERIALS | SOIL TYPE | DEPTH (ft) | SAMPLE | BLOWS PER FOOT | POCKET PEN (tsf) | % PASSING #200 SIEVE | | LIQUID LIMIT | WATER CONTENT | PLASTICITY INDEX | DRY DENSITY (pcf) | FAILURE STRAIN (%) | UNCONFINED COMPRESSIVE STRENGTH (psf) |
|---|---|---|---|---|---|---|---|---|---|---|---|---|---|
| **ALLUVIUM: CLAY:** Yellowish brown (10YR 5/4), dry, very stiff; up to 15% fine sand | CI | 1 | S | | | | | | | | | | |
| | | 2 | D | 27 | 4.5 | | | | | | | | |
| | | | D | | >4.5 | | | | | | | | |
| | | 3 | | | | | | | | | | | |
| **CLAY W/SAND:** Dark yellowish brown (10YR 3/4) to yellowish brown (1-YR 5/6), damp to moist, very stiff; variable amounts of fine to medium sand up to 30% | CI | 4 | S | | | | | | | | | | |
| | | 5 | D | 44 | | | | | | | | | |
| | | 6 | | | | | | | | | | | |
| **BOTTOM OF HOLE @ 5 FEET** No Groundwater Encountered | | 7 | | | | | | | | | | | |
| | | 8 | | | | | | | | | | | |
| | | 9 | | | | | | | | | | | |
| | | 10 | | | | | | | | | | | |
| | | 11 | | | | | | | | | | | |
| | | 12 | | | | | | | | | | | |
| | | 13 | | | | | | | | | | | |
| | | 14 | | | | | | | | | | | |
| | | 15 | | | | | | | | | | | |
| | | 16 | | | | | | | | | | | |
| | | 17 | | | | | | | | | | | |
| | | 18 | | | | | | | | | | | |
| | | 19 | | | | | | | | | | | |
| | | 20 | | | | | | | | | | | |

| DATE: 10/2/03 | LOG OF EXPLORATORY DRILL HOLE | DH - 7 |
|---|---|---|

**PROJECT NAME:** Morgan Hill Recreational Center **PROJECT NUMBER:** 1912E

**DRILL RIG:** Mobile B40 w/140lb Downhole Hammer w/Wire Winch **LOGGED BY:** CSS

**HOLE DIAMETER:** 8" Hollow Stem Auger **HOLE ELEVATION:** --

**SAMPLER:**
D = **Dames & Moore (3" O.D.)**
X = **Modified California (2.5" O.D.)**
I = **Standard Penetrometer (2" O.D.)**
"S" indicates slough in sampler

**GROUND WATER DEPTH:** **Initial** --- **Final** ---

| DESCRIPTION OF EARTH MATERIALS | SOIL TYPE | DEPTH (ft) | SAMPLE | BLOWS PER FOOT | POCKET PEN (tsf) | % PASSING #200 SIEVE | | LIQUID LIMIT | WATER CONTENT | PLASTICITY INDEX | DRY DENSITY (pcf) | FAILURE STRAIN (%) | UNCONFINED COMPRESSIVE STRENGTH (psf) |
|---|---|---|---|---|---|---|---|---|---|---|---|---|---|
| **ALLUVIUM: CLAY:** Yellowish brown (10YR 5/4), dry, very stiff; up to 10% fine sand | CI | 1 | S D D | 31 | 4.25 | | | | 6.8 | | 90 | | |
| | | 2 | | | 4.25 | | | | | | | | |
| | | 3 | S D D | 31 | >4.5 | | | | | | | | |
| **CLAY W/SAND:** Dark yellowish brown (10YR 3/4) to yellowish brown (1-YR 5/6), damp to moist, very stiff; up to 20% fine sand | CI | 4 | | | | | | | | | | | |
| | | 5 | | | | | | | | | | | |
| **CLAYEY SAND:** Dark yellowish brown (10YR 3/6), moist, dense; fine to medium sand w/trace coarse sand, up to 40% fines | SC | 6 | S D D | 744 | | | | | 13 | | 106 | | |
| | | 7 | | | | | | | | | | | |
| **BOTTOM OF HOLE @ 6.5 FEET** No Groundwater Encountered | | 8 | | | | | | | | | | | |
| | | 9 | | | | | | | | | | | |
| | | 10 | | | | | | | | | | | |
| | | 11 | | | | | | | | | | | |
| | | 12 | | | | | | | | | | | |
| | | 13 | | | | | | | | | | | |
| | | 14 | | | | | | | | | | | |
| | | 15 | | | | | | | | | | | |
| | | 16 | | | | | | | | | | | |
| | | 17 | | | | | | | | | | | |
| | | 18 | | | | | | | | | | | |
| | | 19 | | | | | | | | | | | |
| | | 20 | | | | | | | | | | | |

| DATE: 10/2/03 | LOG OF EXPLORATORY DRILL HOLE | DH - 8 |
|---|---|---|

**PROJECT NAME:** Morgan Hill Recreational Center **PROJECT NUMBER:** 1912E

**DRILL RIG:** Mobile B40 w/140lb Downhole Hammer w/Wire Winch **LOGGED BY:** CSS

**HOLE DIAMETER:** 8″ Hollow Stem Auger **HOLE ELEVATION:** --

**SAMPLER:**
D = **Dames & Moore (3" O.D.)**
X = **Modified California (2.5" O.D.)**
I = **Standard Penetrometer (2" O.D.)**
"S" indicates slough in sampler

**GROUND WATER DEPTH:** **Initial** --- **Final** ---

| DESCRIPTION OF EARTH MATERIALS | SOIL TYPE | DEPTH (ft) | SAMPLE | BLOWS PER FOOT | POCKET PEN (tsf) | % PASSING #200 SIEVE | | LIQUID LIMIT | WATER CONTENT | PLASTICITY INDEX | DRY DENSITY (pcf) | FAILURE STRAIN (%) | UNCONFINED COMPRESSIVE STRENGTH (psf) |
|---|---|---|---|---|---|---|---|---|---|---|---|---|---|
| **ALLUVIUM: CLAY:** Yellowish brown (10YR 5/4), dry, very stiff; up to 10% fine sand | CI | 1 | S D D | 23 | >4.5 | | | | 19 | | 99 | | |
| **CLAY W/SAND:** Dark yellowish brown (10YR 3/4) to yellowish brown (1-YR 5/6), damp to moist, hard; 10-20% fine sand | CI | 2 | | | | | | | | | | | |
| | | 3 | | | | | | | | | | | |
| | | 4 | S D D | 48 | >4.5 | | | | 16 | | 104 | | |
| **BOTTOM OF HOLE @ 5 FEET** No Groundwater Encountered | | 5 | | | | | | | | | | | |
| | | 6 | | | | | | | | | | | |
| | | 7 | | | | | | | | | | | |
| | | 8 | | | | | | | | | | | |
| | | 9 | | | | | | | | | | | |
| | | 10 | | | | | | | | | | | |
| | | 11 | | | | | | | | | | | |
| | | 12 | | | | | | | | | | | |
| | | 13 | | | | | | | | | | | |
| | | 14 | | | | | | | | | | | |
| | | 15 | | | | | | | | | | | |
| | | 16 | | | | | | | | | | | |
| | | 17 | | | | | | | | | | | |
| | | 18 | | | | | | | | | | | |
| | | 19 | | | | | | | | | | | |
| | | 20 | | | | | | | | | | | |

# CENTENNIAL RECREATION CENTER EXPANSION PROJECT

## CITY OF MORGAN HILL

171 W EDMUNDSON AVE, MORGAN HILL, CA 95037

## SCOPE OF WORK

GENERAL PROJECT DESCRIPTION INCLUDES:
1. ADDITION OF 3,640 SF TO EXISTING RECREATION CENTER
2. ADDITIONAL LANDSCAPE AND IRRIGATION
3. PARKING LOT
   A. DEMOLITION OF EXISTING CURBS, RIPPING AND RE-GRADING RELATED TO (N) PARKING LOT
   B. NEW AC, STRIPING, CONC CURBS, SITE ELECTRICAL RELATED TO (N) PARKING LOT

2

## ABBREVIATIONS

| | |
|---|---|
| ABV | above |
| AFF | above finished floor |
| ACFL | access floor |
| AP | access panel |
| ACPL | acoustical plaster |
| ACT | acoustical tile |
| ACR | acrylic plastic |
| ADD | addendum |
| ADH | adhesive |
| ADJ | adjacent |
| AGG | aggregate |
| A/C | air conditioning |
| ALT | alternate |
| ALUM | aluminum |
| ADA | american disability assoc. |
| ANC | anchor, anchorage |
| AB | anchor bolt |
| ANOD | anodized |
| ARCH | architect (ural) |
| AD | area drain |
| AC | asphalt concrete |
| AT | asphalt tile |
| APN | assessor parcel map |
| AUTO | automatic |
| @ | at |
| & | and |
| BA | bath |
| BP | building paper |
| BSMT | basement |
| BRG | bearing |
| BPL | bearing plate |
| BM | bench mark |
| BLW | below |
| BETW | between |
| BIT | bituminous |
| BLK | block |
| BLKG | blocking |
| BD | board |
| BS | both sides |
| BW | both ways |
| BOT | bottom |
| BRK | brick |
| BRZ | bronze |
| BLDG | building |
| BUR | built-up roofing |
| CAB | cabinet |
| CAD | cadmium |
| CBC | california building code |
| CPT | carpet (ed) |
| CSMT | casement |
| CI | cast iron |
| CIPC | cast-in-place concrete |
| CST | cast stone |
| CB | catch basin |
| CK | caulk (ing) |
| CLG | ceiling |
| CHT | ceiling height |
| CJ | ceiling joist |
| CEM | cement |
| CL | chain link fence |
| CER | ceramic |
| CT | ceramic tile |
| CMT | ceramic mosaic (tile) |
| CHBD | chalkboard |
| CHAM | chamfer |
| CIR | circle |
| CIRC | circumference |
| CLR | clear (ance) |
| CO | clean out |
| CLS | closure |
| CHPS | collaborative for high performance schools |
| COL | column |
| COMB | combination |
| COMPT | compartment |
| COMPO | composition (composite) |
| COMP | compress (ed), (ion), (ible) |
| CONC | concrete |
| CMU | concrete masonry unit |
| CONST | construction |
| CONT | continue (ous) |
| CONTR | contract (or) |
| CJ | control joint |
| CPR | copper |
| CG | corner guard |
| CORR | corrugated |
| CTR | counter |
| CFL | counterflashing |
| CRS | course (s) |
| CRG | cross grain |
| CFT | cubic foot |
| CYD | cubic yard |
| ℄ | center line |
| CP | cement plaster |
| DPR | damper |
| DP | damp proofing |
| DEMO | demolish, demolition |
| DMT | demountable |
| DEP | depressed |
| DTL | detail |
| DIAG | diagonal |
| DIA | diameter |
| DIM | dimension |
| DPR | dispenser |
| DIV | division |

| | |
|---|---|
| DSA | division of the state architect |
| DR | door |
| DA | double acting |
| DH | double hung |
| DF | douglas fir |
| DBL PLT | double plate |
| D | drain |
| DRB | drainboard |
| DWR | drawer |
| DWG | drawing |
| EF | each face |
| ER | eave rafter |
| ELEC | electric (al) |
| EP | electrical panelboard |
| EWC | electric water cooler |
| EL | elevation |
| ELEV | elevator |
| EMB | embedment |
| EMER | emergency |
| EMT | electrical metallic tubing |
| ENC | enclose (ure) |
| EQ | equal |
| EQP | equipment |
| EST | estimate |
| EXCA | excavate |
| EXH | exhaust |
| <E> | existing |
| EXMP | expanded metal plate |
| EB | expansion bolt |
| EXP | exposed |
| EXT | exterior |
| EXS | extra strong |
| EA | each |
| EW | each way |
| FB | face brick |
| FOC | face of concrete |
| FOF | face of finish |
| FOM | face of masonry |
| FOS | face of stud |
| FF | factory finish |
| FN | fence |
| FBD | fiberboard |
| FRP | fiber reinforced plastic |
| FIN | finish (ed) |
| FFE | finished floor elevation |
| FFL | finished floor line |
| FA | fire alarm |
| FE | fire extinguisher |
| FEC | fire extinguisher cabinet |
| FPL | fireplace |
| FP | fireproof |
| FRC | fire-resistant coating |
| FLG | flashing |
| FLX | flexible |
| FLR | floor (ing) |
| FLCO | floor cleanout |
| FD | floor drain |
| FLUOR | fluorescent |
| FJT | flush joint |
| FTG | footing |
| FND | foundation |
| FR | frame (d), (ing) |
| FRA | fresh air |
| FS | full size |
| FBO | furnished by others |
| FUR | furred (ing) |
| FUT | future |
| GA | gage |
| GALV | galvanized |
| GI | galvanized iron |
| GP | galvanized pipe |
| GKT | gasket (ed) |
| GC | general contract (or) |
| GL | glass, glazing |
| GLB | glass block |
| GB | grab bar |
| GD | grade (ing) |
| GRN | granite |
| GVL | gravel |
| GT | grout |
| GPDW | gypsum drywall |
| GPL | gypsum lath |
| GPPL | gypsum plaster |
| GFCI | ground fault circuit interrupt |
| GYP | gypsum |
| H | high |
| HH | handhole |
| HBD | hardboard |
| HDW | hardware |
| HWD | hardwood |
| HJT | head joint |
| HDR | header |
| HTG | heating |
| HVAC | heating/ventilation/ air conditioning |
| HD | heavy duty |
| HT | height |
| HX | hexagonal |
| HES | high early-strength cement |
| HC | hollow core |
| HM | hollow metal |
| HK | hook (s) |
| HOR | horizontal |
| HB | hose bibb |

| | |
|---|---|
| INCL | include (d), (ing) |
| ID | inside diameter |
| INT | interior |
| INV | invert |
| IPS | iron pipe size |
| INCAN | incandescent |
| ISA | international sign association |
| JC | janitor's closet |
| JT | joint |
| JF | joint filler |
| J | joist |
| KPL | kickplate |
| KIT | kitchen |
| KD | knock down |
| LBL | label |
| LAB | laboratory |
| LB | lag bolt |
| LS | lag screw |
| LAM | laminate (d) |
| LAV | lavatory |
| LH | left hand |
| L | length |
| LT | light |
| LW | lightweight |
| LMS | limestone |
| LTL | lintel |
| LBS | pounds |
| LVR | louver |
| MB | machine bolt |
| MI | malleable iron |
| MH | manhole |
| MFR | manufacture (er) |
| MRB | marble |
| MAS | masonry |
| MO | masonry opening |
| MATL | material (s) |
| MAX | maximum |
| MECH | mechanical |
| MC | medicine cabinet |
| MTL | metal |
| MFD | metal floor decking |
| MRD | metal roof decking |
| MIN | minimum |
| MIR | mirror |
| MISC | miscellaneous |
| MOD | modular |
| MLD | molding, molding |
| MT | mount (ed), (ing) |
| MOV | movable |
| MULL | mullion |
| NL | nailable |
| NAT | natural |
| (N) | new |
| NRC | noise reduction coefficient |
| NOM | nominal |
| NIC | not in contract |
| NTS | not to scale |
| OBS | obscure |
| OC | on center (s) |
| OPG | opening |
| OPH | opposite hand |
| OD | outside diameter |
| OA | overall |
| OH | overhead |
| O/ | over |
| PNT | paint (ed) |
| PNL | panel |
| PB | panic bar |
| PTD | paper towel dispenser |
| PTR | paper towel receptor |
| PAR | parallel |
| PK | parking |
| PBD | particle board |
| PTN | partition |
| POT | path of travel |
| PV | pave (d), (ing) |
| PVMT | pavement |
| PED | pedestal |
| PERF | perforate (d) |
| PERIM | perimeter |
| PA | planting area |
| PLAS | plaster |
| PLAM | plastic laminate |
| PLT | plate |
| PG | plate glass |
| PLWD | plywood |
| PVC | polyvinylchloride |
| PSF | pounds per square foot |
| PCC | precast concrete |
| PFN | prefinished |
| PRF | preformed |
| PFMG | pre-formed metal gutter |
| PTN | project tracking number |
| PL | property line, plate |
| QT | quarry tile |

| | |
|---|---|
| RAD | radius |
| RWL | rainwater leader |
| REF | reference |
| RFL | reflect (d), (ing) |
| REFR | refrigerator |
| REG | register |
| RCP | reinforced conc pipe |
| REM | remove |
| RES | resilient |
| RA | return air |
| RVS | reverse (side) |
| REV | revision (s), revised |
| RH | right hand |
| ROW | right-of-way |
| R | riser |
| RD | roof drain |
| RFH | roof hatch |
| RR | roof rafter |
| RM | room |
| RO | rough opening |
| RB | rubber base |
| RBT | rubber tile |
| SFGL | safety glass |
| SCCOE | santa clara county office of education |
| SCH | schedule |
| SCD | see civil drawings |
| SSD | see structural drawings |
| SMD | see mechanical drawings |
| SED | see electrical drawings |
| SEC | sections |
| SHTH | sheathing |
| SHT | sheet |
| SH | shelf, shelving |
| SIM | similar |
| SB | solid block |
| SC | solid core |
| SP | soundproof |
| SPC | spacer |
| SPK | speaker |
| SPEC | specification (s) |
| SQ | square |
| SST | stainless steel |
| STD | standard |
| STA | station |
| STO | storage |
| SD | storm drain |
| STR | structural |
| SCT | structural clay tile |
| SUS | suspended |
| SYM | symmetry (ical) |
| STC | sound transmission class |
| TKBD | tackboard |
| TKS | tackstrip |
| TEL | telephone |
| TV | television |
| TC | terra cotta |
| TZ | terrazzo |
| THK | thick (ness) |
| THR | threshold |
| TPTN | toilet partition |
| TPD | toilet paper dispenser |
| T&G | tongue and groove |
| TO | top of |
| TB | towel bar |
| TR | transom |
| T | tread |
| TYP | typical |
| UMC | uniform mechanical code |
| UBC | uniform building code |
| UPC | uniform plumbing code |
| UFC | uniform fire code |
| UR | urinal |
| UNO | unless noted otherwise |
| VCT | vinyl composition tile |
| VB | vapor barrier |
| VERT | vertical |
| VTR | vent through roof |
| WC | water closet |
| WCO | wall cleanout |
| WD | wood |
| WGL | wire glass |
| WH | water heater |
| WI | wrought iron |
| WIND | window |
| WP | waterproof |
| WR | water resistant |
| WSCT | wainscot (ing) |
| W/ | with |
| W/O | without |

## SHEET LEGEND

| | | |
|---|---|---|
| ARCHITECTURAL | A0.1 | TITLE SHEET |
| | A0.2 | CAL GREEN CHECKLIST |
| CIVIL | C1.0 | SITE TOPOGRAPHY MAP & DEMO PLAN |
| | C1.1 | GRADING & UTILITY PLAN-SITE IMPROVEMENTS NORTH |
| | C1.2 | GRADING & UTILITY PLAN-SITE IMPROVEMENTS SOUTH |
| | C1.3 | EROSION AND SEDIMENT CONTROL PLAN |
| ARCHITECTURAL | A1.0 | OVERALL SITE PLAN |
| | A1.1 | EXISTING & DEMO SITE PLAN |
| | A1.2 | ENLARGED SITE PLAN |
| | A1.3 | SITE DETAILS |
| | A2.0 | EXISTING & DEMO FLOOR PLAN |
| | A2.1 | FLOOR PLAN |
| | A2.2 | DIMENSION PLAN |
| | A2.3 | EGRESS PLAN |
| | A2.4 | FINISH PLAN |
| | A2.5 | EXISTING & DEMO REFLECTED CEILING PLAN |
| | A2.6 | REFLECTED CEILING PLAN |
| | A2.8 | ROOF PLAN |
| | A3.1 | EXTERIOR ELEVATIONS |
| | A4.1 | BUILDING SECTIONS |
| | A5.1 | INTERIOR ELEVATIONS |
| | A6.1 | DOOR AND WINDOW SCHEDULE |
| | A6.2 | DOOR & WINDOW DETAILS |
| | A7.1 | WALL TYPES & DETAILS |
| | A7.2 | WALL DETAILS |
| | A8.1 | ROOF DETAILS |
| | A9.1 | MISC DETAILS |
| STRUCTURAL | 1S | GENERAL NOTES |
| | 2S | FOUNDATION PLAN |
| | 3S | CEILING FRAMING PLAN |
| | 4S | ROOF FRAMING PLAN |
| | 5S | FOUNDATION DETAILS |
| | 6S | FRAMING DETAILS |
| | 7S | FRAMING DETAILS |
| MECHANICAL | M0.1 | HVAC: NOTES & LEGENDS |
| | M0.2 | HVAC: SCHEDULES & DETAILS |
| | M2.1 | HVAC: FLOOR PLAN |
| | M2.2 | HVAC: ROOF PLAN |
| | M2.3 | HVAC: SECTION |
| | T24.1 | TITLE 24 |
| | T24.2 | TITLE 24 |
| | T24.3 | TITLE 24 (1) |
| PLUMBING | P0.1 | PLUMBING: NOTES & LEGEND |
| | P2.0 | PLUMBING: PLANS |
| ELECTRICAL | E0.1 | SYMBOLS, ABBREVIATIONS, LIGHT FIXTURE SCHEDULE, CODES, STANDARDS, NOTES & SHEET INDEX |
| | E0.2 | CALIFORNIA ENERGY COMPLIANCE TITLE 24 (BUILDING INTERIOR) |
| | E0.3 | CALIFORNIA ENERGY COMPLIANCE TITLE 24 (BUILDING EXTERIOR) |
| | E1.1 | ELECTRICAL SINGLE LINE DIAGRAM & PANEL BOARD SCHEDULES |
| | E2.1 | ELECTRICAL SITE PLAN |
| | E2.1PH | PHOTOMETRIC (1) |
| | E3.1 | ELECTRICAL DEMOLITION SITE PLAN |
| | E3.2 | ELECTRICAL DEMOLITION PLAN |
| | E4.1 | POWER & SYSTEMS PLAN |
| | E4.2 | POWER PLAN - ROOF |
| | E5.1 | LIGHTING PLAN |
| | E6.1 | ELECTRICAL DETAILS |
| | E6.2 | ELECTRICAL DETAILS |
| LANDSCAPE | L1.1 | EXISTING & DEMO IRRIGATION PLAN |
| | L1.2 | IRRIGATION PLAN |
| | L2.1 | LANDSCAPE PLAN |
| | L3.0 | LANDSCAPE DETAILS (1) |

## SYMBOLS

DESCRIBES AN "AREA" OR "FIELD"

RM NAME / 101 — ROOM NAME / ROOM NUMBER

1 / A3.1 — ELEVATION: Elevation Reference Number; Sheet Number when shown

1 / A4.1 — SECTION: Section Reference Number; Sheet Number when shown

1 / A5.1 / 2 — ROOM ELEVATION: Detail Reference Number; Elevation Reference Number; Sheet Number where shown

1 / A7.1 — TYPICAL DETAIL: Detail Reference Number; Sheet Number where shown

1 / A1.1 — PHOTO REFERENCE: Direction Indicator; Detail Reference Number; Sheet Number where shown

A — TYPICAL COLUMN or SHEAR LINE: Column or Shear Line Designation; Center Line of Column or Shear Wall

TRUE NORTH / NORTH REF. — NORTH ARROW

## BUILDING & SITE DATA

| | |
|---|---|
| OCCUPANCY TYPE: | MIXED USE: A3, S1 |
| NUMBER OF STORIES: | 1 |
| <E> TYPE OF CONSTRUCTION: | II-B |
| PROPOSED BUILDING 3: | V-B |
| <E> STRUCTURE SQ.FT. | SEE SITE ANALYSIS A1.0 |
| PROPOSED STRUCTURE SQ.FT. | SEE SITE ANALYSIS A1.0 |
| APN # | 767-18-025 & 767-18-037 |
| SITE ACREAGE | 9.01 |

2

## DEFERRED SUBMITTALS

1. FIRE SPRINKLERS
2. ALTERATIONS TO FIRE ALARM SYSTEM

## CONTACTS

**OWNER**
CITY OF MORGAN HILL
17575 PEAK AVENUE
MORGAN HILL, CA 95037
ATTN: YAT CHO
PHONE: 1-408-778-6480
FAX: 1-408-779-7236

**ARCHITECT**
WESTON MILES ARCHITECTS, INC.
17500 DEPOT STREET, SUITE #200
MORGAN HILL, CA 95037
ATTN: LESLEY MILES/CHARLES WESTON, A.I.A.
PHONE: 1-408-779-6686
FAX: 1-408-778-9417

**CIVIL**
MH ENGINEERING CO.
16075 VINEYARD BLVD.
MORGAN HILL, CA 95037
ATTN: HARINDER SINGLA
PHONE: 1-779-7381

**STRUCTURAL**
HD DESIGN & ENGINEERING, INC.
1570 MISSION AVENIDA
MORGAN HILL, CA 95037
ATTN: HOC DOAN
PHONE: 1-408-605-8859

**MECHANICAL/ PLUMBING**
H&M MECHANICAL GROUP
8517 EARHART RD., #230
OAKLAND, CA 94621
ATTN: GARY HENNINGS
PHONE: 1-510-569-2000

**ELECTRICAL**
AURUM CONSULTING ENGINEERS
300 S. 1ST STREET, SUITE #342
SAN JOSE, CA 95113
ATTN: NAJIB ANWARY
PHONE: 1-408-564-7925

**LANDSCAPE**
WESTON MILES ARCHITECTS, INC.
17500 DEPOT STREET, SUITE #120
MORGAN HILL, CA 95037
ATTN: LESLEY MILES, A.I.A.
PHONE: 1-408-779-6686
FAX: 1-408-778-9417

DEFERRED SUBMITTAL REQUIRED FOR:
__ROOF TRUSSES __POOL, SPA & RELATED
__FLOOR TRUSSES __CARPORTS
X SPRINKLER SYS.
X FIRE ALARM SYS.
__OTHER:

Type "M" Copper Prohibited

Department Sign-Offs Required For Final Inspection:
- [x] Planning
- Public Works - Fees
- [ ] Flood Elevation Certificate
- [ ] Public Works - Inspection
- [ ] Public Works - Backflow
- [x] Fire Prevention
- [ ] Housing
- [ ] Pretreatment
- [ ] Other
- [x] School District
- [ ] Health Department
- [ ] Hazardous Material
- [ ] Landscape Certificate
- [ ] Green Building Certification
- [x] Construction Waste Mgmt.
- [ ] Wage Theft Prevention
- [ ] Geologic

JOB COPY
These plans must be kept on the job at all times.
CITY OF MORGAN HILL
BUILDING DIVISION
Reviewed for Code Compliance
Date
Special Inspections Req.
BUILDING DEPT.
APR 18 2019
CITY OF MORGAN HILL

## CODE COMPLIANCE

ALL WORK & MATERIAL SHALL BE PERFORMED & INSTALLED IN COMPLIANCE WITH THE FOLLOWING CODES AS ADOPTED AND AMENDED BY THE GOVERNING JURISDICTION. NOTHING IN THESE PLANS IS TO BE CONSTRUED TO PERMIT WORK NOT CONFORMING TO THESE CALIFORNIA CODES. EFFECTIVE JANUARY 1, 2016

2016 CALIFORNIA ADMINISTRATIVE CODE, PART 1, TITLE 24 CCR

2016 CALIFORNIA BLDG CODE (CBC). PART 2, TITLE 24, CCR (2012 INTERNATIONAL BLDG CODE VOL. 1-2 AND 2013 AMENDMENTS)

2016 CALIFORNIA ELECTRICAL CODE (CEC). PART 3,TITLE 24 CCR (2011 NATIONAL ELECTRICAL CODE AND 2013 CA AMENDMENTS)

2016 CALIFORNIA MECHANICAL CODE (CMC). PART 4, TITLE 24 CCR (2012 UNIFORM MECHANICAL CODE AND 2013 CA AMENDMENTS)

2016 CALIFORNIA PLUMBING CODE (CPC). PART 5, TITLE 24 CCR (2012 UNIFORM PLUMBING CODE AND 2013 CA AMENDMENTS)

2016 CALIFORNIA ENERGY CODE (CEnC). PART 6, TITLE 24 CCR

2016 CALIFORNIA FIRE CODE (CFC). PART 9, TITLE 24 CCR (2012 INTERNATIONAL FIRE CODE AND 2013 CA AMENDMENTS)

2016 CALIFORNIA GREEN BUILDING STANDARDS CODE. PART 11, TITLE 24 CCR

2016 CALIFORNIA REFERENCED STANDARDS. PART 12, TITLE 24 CCR.

TITLE 19 CCR, PUBLIC SAFETY, STATE FIRE MARSHALL REGULATIONS

2010 AMERICANS W/DISABILITIES ACT (ADA) STANDARDS FOR ACCESSIBLE DESIGN

2016 NFPA 13, INSTALLATION OF AUTOMATIC SPRINKLER SYST. (CA AMENDED)

2013 NFPA 14, INSTALLATION OF STANDPIPE & HOLD SYSTEMS (CA AMENDED)

2013 NFPA 17, DRY CHEMICAL EXTINGUISHING SYSTEMS

2013 NFPA 17A, WET CHEMICAL EXTINGUISHING SYSTEMS

2016 NFPA 20, INSTALLATION OF STATIONARY PUMPS FOR FIRE PROTECTION

2013 NFPA 22, WATER TANKS FOR PRIVATE FIRE PROTECTION

2016 NFPA 24, INSTALLATION OF PRIVATE FIRE SERVICE MAINS & THEIR APPURTENANCES (CA EDITION)

2013 NFPA 25, INSPECTION, TESTING, MAINTENANCE OF WATER-BASED FIRE PROTECTION SYSTEMS (CA AMENDED)

2013 NFPA 72, NATIONAL FIRE ALARM CODE (CA AMENDED; SEE UL STD 1071 FOR "VISUAL DEVICES")

2013 NFPA 80, FIRE DOORS AND OTHER OPENING PROTECTIVES

2013 NFPA 110, EMERGENCY AND STANDBY POWER SYSTEMS

2012 NFPA 170, STANDARD FOR FIRE SAFETY & EMERGENCY SYMBOLS

2012 NFPA 2001 CLEAN AGENT FIRE EXTINGUISHING SYSTEMS

SFM 12-10-1, POWER OPERATED EXIT DOORS

SFM 12-10-2, SINGLE POINT LATCHING OR LOCKING DEVICES

SFM 12-10-3, EMERGENCY EXIT & PANIC HARDWARE

UL 38, MANUAL OPERATING SIGNAL BOXES (2008 EDITION)

UL 268, SMOKE DETECTORS FOR FIRE PROTECTIVE SIGNALING SYSTEMS (2009 EDITION)

UL 268A, SMOKE DETECTORS DUCT APPLICATIONS (2008 EDITION)

UL 300, FIRE TESTING OF FIRE EXTINGUISHING SYST. FOR PROTECT-ION OF RESTAURANT COOKING AREAS (2005 EDITION)

UL 305, PANIC HARDWARE (2012 EDITION)

UL 464, AUDIBLE SIGNAL APPLICATIONS (2009 EDITION)

UL 521, HEAT DETECTORS FOR FIRE PREVENTING SIGNALING SYSTEM (1999 EDITION)

UL 864, CONTROL UNITS FOR FIRE PROTECTIVE SIGNALING SYSTEMS (2003 EDITION WITH REVISIONS THROUGH JULY 14,2005)

CCR TITLE 8, DIVISION 1, CHAPTER 4, SUBCHAPTER 6, ELEVATOR SAFETY ORDERS, COMMENCING WITH SECTION 3094.2.

ASME A17.1 - 2007 (W/A17.1A/CSA B44A-08 ADDENDA) SAFETY CODE FOR ELEVATORS AND ESCALATORS.

ASME A18.1 - 2003, SAFETY STANDARD FOR PLATFORM LIFTS AND STAIRWAY CHAIRLIFTS, COMMENCING WITH SECTION 2.

ICC 300-2012 STANDARD FOR BLEACHERS, FOLDING AND TELSCOPIC SEATING AND GRANDSTANDS

COMPLIANCE WITH CFC CHAPTER 33 "FIRE SAFTEY DURING CONSTRUCTION AND DEMOLITION" WILL BE ENFORCED.

EMERGENCY VEHICLE ACCESS ROADS AND ON SITE FIRE HYDRANTS SHALL BE IN SERVICE AND OPERABLE PRIOR TO LOADING THE SITE WITH COMBUSTABLE MATERIALS.

## VICINITY MAP

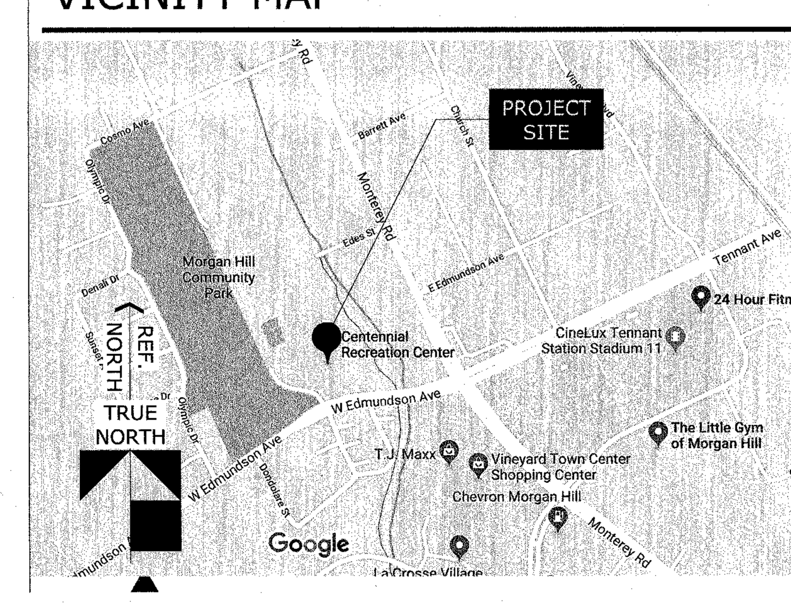


WESTON MILES ARCHITECTS
17500 Depot Street, Suite #200
Morgan Hill, CA 95037
1•408•779•6686
• Architecture • Landscape •

NOT VALID WITHOUT SIGNATURE

REVISIONS
1 01/30/2019 PLAN CHECK #1
2 03/27/2019 PLAN CHECK #2
3

# TITLE SHEET

CENTENNIAL RECREATION CENTER EXPANSION PROJECT

CITY OF MORGAN HILL
171 W EDMUNDSON AVE, MORGAN HILL, CA 95037

These drawings are instruments of service and are the property of WESTON MILES ARCHITECTS, INC. All designs and other information on the drawings are for use on the specified project and shall not be used otherwise without the expressed written permission of WESTON MILES ARCHITECTS, INC.

Written dimensions on these drawings shall have precedence over scaled dimensions. Contractors shall verify and be responsible for all dimensions and conditions on the job and this office shall be notified of any variations from the dimensions and conditions shown by these drawings. Shop details shall be submitted to this office for approval before proceeding with fabrication.

© Copyrighted 2018

DATE: 11/9/2018
JOB NO: 18001

A0.1

BLDM2018-0195

STATE OF CALIFORNIA – DEPARTMENT OF GENERAL SERVICES – BUILDING STANDARDS COMMISSION
**CALGreen Verification Guidelines – Mandatory Measures Checklist**
BSC CG-200 (Rev. 12/16)

## *CALGreen* VERIFICATION GUIDELINES MANDATORY MEASURES CHECKLIST

**Application:** This checklist shall be used for nonresidential projects that meet one of the following: new construction, building additions of 1,000 sq. ft. or greater or building alterations with a permit valuation of $200,000 or more pursuant to *CALGreen* Section 301.3 AND do not trigger a Tier 1 or Tier 2 requirement.

**Y** = Yes (section has been selected and/or included)
**N/A** = Not Applicable (Code section does not apply to the project, mainly used for additions and alterations)
**O** = Other (provide explanation)
**[N]** = New construction pursuant to Section 301.3
**[A]** = Additions and/or alterations pursuant to Section 301.3

| CHAPTER 5 DIVISIONS | | SECTION TITLE | CODE SECTION | Y | N/A | O | Plan sheet, Spec or Attach Reference |
|---|---|---|---|---|---|---|---|
| **DIVISION 5.1 Planning and Design** | Mandatory | Storm Water Pollution Prevention w/ subsections | 5.106.1 through 5.106.1.2 | | X | | |
| | Mandatory | Short Term Bicycle Parking | 5.106.4.1.1 | | X | | |
| | Mandatory | Long Term Bicycle Parking | 5.106.4.1.2 | | X | | |
| | Mandatory | Designated Parking For Clean Air Vehicles | 5.106.5.2 | | X | | |
| | Mandatory | Parking stall marking | 5.106.5.2.1 | | X | | |
| | Mandatory | Single (EV) Charging space requirements [N] | 5.106.5.3.1 | | X | | |
| | Mandatory | Multiple (EV) Charging space requirements [N] | 5.106.5.3.2 | | X | | |
| | Mandatory | EV charging space calculation [N] w/exceptions | 5.106.5.3.3 | | X | | |
| | Mandatory | [N] Identification | 5.106.5.3.4 | | X | | |
| | Mandatory | [N] Future charging spaces w/ notes 1-3 | 5.106.5.3.5 | | X | | |
| | Mandatory | Light Pollution Reduction [N] w/ exceptions and note | 5.106.8 | | X | | |
| | Mandatory | Grading and Paving w/exception for Additions and Alterations not altering the drainage path | 5.106.10 | X | | | C1.1, C1.2 |
| **DIVISION 5.2 Energy Efficiency** | Mandatory | Meet the minimum Energy Efficiency Standard | 5.201.1 | X | | | M0.2 |
| **DIVISION 5.3 Water Efficiency and Conservation** | Mandatory | Separate Meters (new buildings or additions > 50,000 SF that consume more than 100 gal/day) | 5.303.1.1 | | X | | |
| | Mandatory | Separate Meters (for tenants in new buildings or additions that consume more than 1,000 gal/day) | 5.303.1.2 | | X | | |
| | Mandatory | Water closets shall not exceed 1.28 gallons per flush | 5.303.3.1 | | X | | |
| | Mandatory | Wall-mounted urinals shall not exceed 0.125 gpf | 5.303.3.2.1 | | X | | |
| | Mandatory | Floor-mounted urinals shall not exceed 0.5 gpf | 5.303.3.2.2 | | X | | |
| | Mandatory | Single showerhead shall have maximum flow rate of 2.0 gpm (gallons per minute) at 80 psi | 5.303.3.3.1 | | X | | |
| | Mandatory | Multiple showerheads serving one shower shall have a combined flow rate of 2.0 gpm at 80 psi | 5.303.3.3.2 | | X | | |
| | Mandatory | Nonresidential lavatory faucets | 5.303.3.4.1 | | X | | |
| | Mandatory | Kitchen faucets | 5.303.3.4.2 | | X | | |
| | Mandatory | Wash basins | 5.303.3.4.3 | | X | | |
| | Mandatory | Metering faucets | 5.303.3.4.4 | | X | | |

| CHAPTER 5 DIVISIONS | | SECTION TITLE | CODE SECTION | Y | N/A | O | Plan sheet, Spec or Attach Reference |
|---|---|---|---|---|---|---|---|
| | Mandatory | Metering faucets for wash fountains | 5.303.3.4.5 | | X | | |
| | Mandatory | Food waste disposers w/note | 5.303.4.1 | | X | | |
| | Mandatory | Areas of additions and alterations | 5.303.5 | | X | | |
| | Mandatory | Standards for plumbing fixtures and fittings | 5.303.6 | | X | | |
| | Mandatory | Outdoor water use in landscape areas equal to or greater than 500 square feet | 5.304.2 | | X | | |
| | Mandatory | Outdoor water use in rehabilitated landscape projects with areas equal to or greater than 2,500 square feet | 5.304.3 | | X | | |
| | Mandatory | Outdoor water use in landscape areas of 2,500 square feet or less | 5.304.4 | | X | | |
| | Mandatory | Graywater or rainwater use in landscaped areas | 5.304.5 | | X | | |
| **DIVISION 5.4 Material Conservation and Resource Efficiency** | Mandatory | Weather Protection | 5.407.1 | X | | | |
| | Mandatory | Moisture Control: sprinklers | 5.407.2.1 | | X | | |
| | Mandatory | Moisture Control: Exterior door protection | 5.407.2.2.1 | X | | | 3/A4.1 |
| | Mandatory | Moisture Control: Flashing | 5.407.2.2.2 | X | | | 076000 |
| | Mandatory | Construction waste management-comply with either: sections 5.408.1.1, 5.408.1.2, 5.408.1.3 or more stringent local ordinance | 5.408.1.1, 5.408.1.2, 5.408.1.3 | X | | | 017400 |
| | Mandatory | Construction waste management: Documentation w/notes | 5.408.1.4 | X | | | 017400 & A0.2 |
| | Mandatory | Universal Waste [A] | 5.408.2 | X | | | 017400 |
| | Mandatory | Excavated soil and land clearing debris w/ exception and notes | 5.408.3 | X | | | 024113 |
| | Mandatory | Recycling by Occupants w/ exception | 5.410.1 | | | | |
| | Mandatory | Recycling by Occupants: Additions w/ exception | 5.410.1.1 | | | | |
| | Mandatory | Recycling by Occupants: Sample ordinance | 5.410.1.2 | | | | |
| | Mandatory | Commissioning new buildings (≥ 10,000 SF) [N] w/exceptions and notes | 5.410.2 | | X | | |
| | Mandatory | Owner's or Owner representative's Project Requirements (OPR) [N] | 5.410.2.1 | | X | | |
| | Mandatory | Basis of Design (BOD) [N] | 5.410.2.2 | | X | | |
| | Mandatory | Commissioning Plan [N] | 5.410.2.3 | X | | | M0.1, MT24 |
| | Mandatory | Functional Performance Testing [N] | 5.410.2.4 | X | | | M0.1, MT24 |
| | Mandatory | Documentation and Training [N] | 5.410.2.5 | X | | | M0.1, MT24 |
| | Mandatory | Systems Manual [N] | 5.410.2.5.1 | X | | | M0.1, MT24 |
| | Mandatory | Systems Operation Training) [N] | 5.410.2.5.2 | X | | | M0.1, MT24 |
| | Mandatory | Commissioning Report [N] | 5.410.2.6 | X | | | M0.1, MT24 |
| | Mandatory | Testing and adjusting for new buildings < 10,000 SF or new systems that serve additions or alterations. | 5.410.4 | X | | | M0.1, MT24 |
| | Mandatory | System Testing Plan for HVAC, Lighting, water heating, renewable energy, landscape irrigation and water reuse. | 5.410.4.2 | X | | | M0.1, MT24 |
| | Mandatory | Procedures for testing and adjusting | 5.410.4.3 | X | | | M0.1, MT24 |
| | Mandatory | HVAC balancing | 5.410.4.3.1 | X | | | M0.1, MT24 |
| | Mandatory | Reporting for testing and adjusting | 5.410.4.4 | X | | | M0.1, MT24 |
| | Mandatory | Operation and Maintenance (O&M) Manual | 5.410.4.5 | X | | | M0.1, MT24 |
| | Mandatory | Inspection and reports | 5.410.4.5.1 | X | | | M0.1, MT24 |

| CHAPTER 5 DIVISIONS | | SECTION TITLE | CODE SECTION | Y | N/A | O | Plan sheet, Spec or Attach Reference |
|---|---|---|---|---|---|---|---|
| **DIVISION 5.5 Environ-mental Quality** | Mandatory | Fireplaces | 5.503.1 | | X | | |
| | Mandatory | Woodstoves | 5.503.1.1 | | X | | |
| | Mandatory | Temporary ventilation | 5.504.1 | X | | | M0.1 |
| | Mandatory | Covering of ducts openings and protection of mechanical equipment during construction | 5.504.3 | X | | | M0.1 |
| | Mandatory | Adhesives, sealants and caulks | 5.504.4.1 | X | | | 079000 |
| | Mandatory | Paints and coatings | 5.504.4.3 | X | | | 099100 |
| | Mandatory | Aerosol paints and coatings | 5.504.4.3.1 | X | | | 099100 |
| | Mandatory | Aerosol paints and coatings: Verification | 5.504.4.3.2 | X | | | 099100 |
| | Mandatory | Carpet systems | 5.504.4.4 | X | | | TBD |
| | Mandatory | Carpet cushion | 5.504.4.4.1 | X | | | TBD |
| | Mandatory | Carpet adhesive | 5.504.4.4.2 | X | | | TBD |
| | Mandatory | Composite wood products | 5.504.4.5 | | X | | |
| | Mandatory | Composite wood products: Documentation | 5.504.4.5.3 | | X | | |
| | Mandatory | Resilient flooring systems | 5.504.4.6 | | X | | |
| | Mandatory | Resilient flooring: Verification of compliance | 5.504.4.6.1 | | X | | |
| | Mandatory | Filters w/ exceptions | 5.504.5.3 | | X | | |
| | Mandatory | Filters: Labeling | 5.504.5.3.1 | X | | | M0.1 |
| | Mandatory | Environmental tobacco smoke (ETS) control | 5.504.7 | | X | | |
| | Mandatory | Indoor moisture control | 5.505.1 | X | | | MT24 |
| | Mandatory | Outside air delivery | 5.506.1 | X | | | M0.1 |
| | Mandatory | Carbon dioxide (CO2) monitoring | 5.506.2 | X | | | M0.1 |
| | Mandatory | Acoustical control w/ exception | 5.507.4 | | X | | |
| | Mandatory | Exterior noise transmission, prescriptive method w/ exceptions | 5.507.4.1 | | X | | |
| | Mandatory | Noise exposure where noise contours are not readily available | 5.507.4.1.1 | | X | | |
| | Mandatory | Performance method | 5.507.4.2 | | X | | |
| | Mandatory | Site features | 5.507.4.2.1 | | X | | |
| | Mandatory | Documentation of compliance | 5.507.4.2.2 | | X | | |
| | Mandatory | Interior sound transmission w/ note | 5.507.4.3 | | X | | |
| | Mandatory | Ozone depletion and greenhouse gas reductions | 5.508.1 | X | | | M0.1 |
| | Mandatory | Chlorofluorocarbons (CFCs) | 5.508.1.1 | | X | | |
| | Mandatory | Halons | 5.508.1.2 | X | | | M0.1 |
| | Mandatory | Supermarket refrigerant leak reduction for retail food stores 8,000 square feet or more sections 5.508.2 through 5.508.2.6.3 | 5.508.2 through 5.508.2.6.3 | | X | | |
| | | END OF MANDATORY PROVISIONS | | | | | |

**Documentation Author's /Responsible Designer's Declaration Statement Mandatory:** I attest that this mandatory provisions checklist is accurate and complete.

| | |
|---|---|
| Signature: [signature] | |
| Company: WESTON MILES ARCHITECTS | Date: 11/09/2018 |
| Address: 17500 DEPOT STREET, SUITE 200 | License: C 26,458 |
| City/State/Zip MORGAN HILL, CA 95037 | License: |

JOB COPY
These plans mu... job at all times
CITY OF MORGAN HILL
BUILDING DIVISION

WESTON MILES ARCHITECTS
17500 Depot Street, Suite #200
Morgan Hill, CA 95037
1 • 408 • 779 • 6686
• Architecture • Landscape •

LICENSED ARCHITECT LESLEY L. MILES C-26458 RENEWAL 9-30-19 STATE OF CALIFORNIA
NOT VALID WITHOUT SIGNATURE

REVISIONS
1 01/30/2019 PLAN CHECK #1
2
3

# CAL GREEN CHECKLIST

CENTENNIAL RECREATION CENTER EXPANSION PROJECT

CITY OF MORGAN HILL
171 W EDMUNDSON AVE, MORGAN HILL, CA 95037

These drawings are instruments of service and are the property of WESTON MILES ARCHITECTS, INC. All designs and other information on the drawings are for use on the specified project and shall not be used otherwise without the expressed written permission of WESTON MILES ARCHITECTS, INC.
Written dimensions on these drawings shall have precedence over scaled dimensions. Contractors shall verify and be responsible for all dimensions and conditions on the job and this office shall be notified of any variations from the dimensions and conditions shown by these drawings. Shop details shall be submitted to this office for approval before proceeding with fabrication.
© Copyrighted 2018

DATE: 11/9/2018
JOB NO: 18001

A0.2

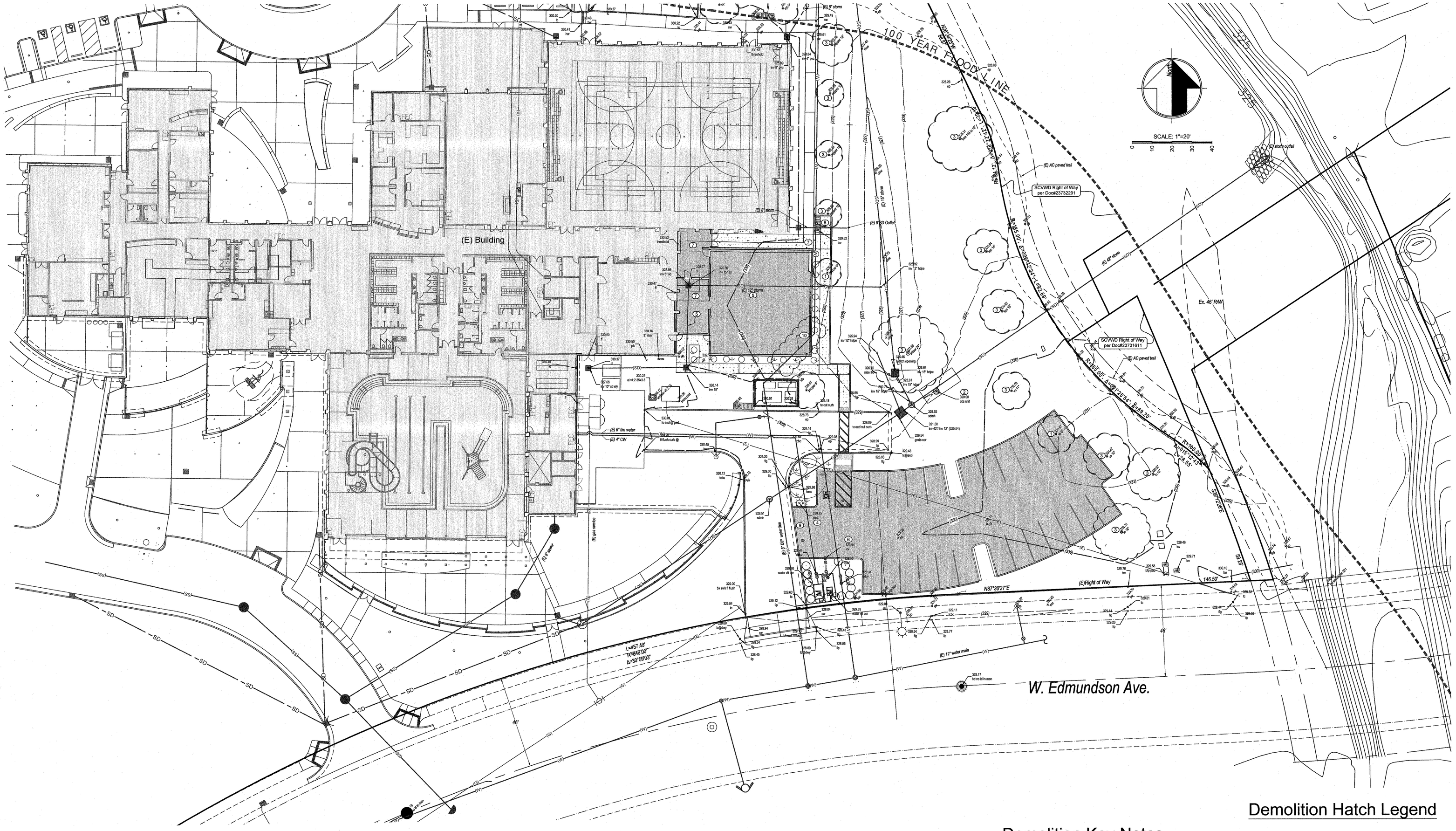


## ABBREVIATIONS:

| | | | |
|---|---|---|---|
| AC | ASPHALT CONCRETE | GV | GATE VALVE |
| BC | BEGINNING OF CURVE | HP | HIGH POINT |
| BFE | BASE FLOOD ELEVATION | INV. | INVERT |
| BLDG | BUILDING | JP | JOINT POLE |
| BVC | BEG. VERTICAL CURVE | LP | LOW POINT |
| BW | BACK OF SIDEWALK | MAX. | MAXIMUM |
| CB | CATCH BASIN | MIN. | MINIMUM |
| CI | CURB INLET | NG | NATURAL GROUND |
| ℄ | CENTERLINE | PB | PULL BOX |
| CL D/W | CENTERLINE OF DRIVEWAY | ⅊ | PROPERTY LINE |
| CMP | CORRUGATED METAL PIPE | P.S.E. | PUBLIC SERVICE EASEMENT |
| CO | CLEAN OUT | P.S.D.E. | |
| DI | DROP INLET | PVI | |
| D.I.P. | DUCTILE IRON PIPE | RCP | REINFORCED CONCRETE PIPE |
| DWY | DRIVEWAY | R/W | RIGHT OF WAY |
| EC | END OF CURVE | SDMH | STORM DRAIN MANHOLE |
| EG | EXISTING GRADE | SSMH | SANITARY SEWER MANHOLE |
| ELCT | ELECTROLIER | STD. | STANDARD |
| EP | EDGE OF PAVEMENT | SW | SIDEWALK |
| ER | END OF RETURN | TBM | TEMPORARY BENCH MARK |
| EVC | END VERTICAL CURVE | TC | TOP OF CURB |
| EX, EXST. | EXISTING | TYP. | TYPICAL |
| FF | FINISH FLOOR | WM | WATER METER |
| FG | FINISH GRADE | WV | WATER VALVE |
| FH | FIRE HYDRANT | | |
| FL | FLOW LINE | | |
| GB | GRADE BREAK | | |

## LEGEND

| PROPOSED | EXISTING | DESCRIPTION |
|---|---|---|
| | | PROPERTY LINE |
| | | CENTER LINE |
| | | CURB AND GUTTER |
| | | DRIVEWAY APPROACH |
| SD | (SD) | STORM DRAIN |
| SS | (SS) | SANITARY SEWER |
| W | (W) | WATER MAIN |
| | (G) | GAS |
| E | (E) | ELECTRIC |
| | (T) | TELEPHONE |
| | | FENCE, TYPE AS SHOWN |
| | | STREET BARRICADE |
| | | BENCH MARK |
| | | MONUMENT, TYPE AS SHOWN |
| 1 | | REVISION |
| D 15 | | SECTION - DETAIL SHEET NO. |
| 2.2% | (2.1%) | SWALE SLOPE |
| | | STORM DRAIN MANHOLE |
| | | CURB INLET |
| | | DROP INLET |
| | | SANITARY SEWER MANHOLE |

## Demolition Key Notes

1. Remove or relocate existing tree.
2. Existing storm water filtration (cds) device.
3. Existing tree to remain protected during demolition and construction.
4. Existing pole light to remain in place and to be protected during construction.
5. Existing storm drain to be removed and relocated per sheet C1.1
6. Relocate existing water meter.
7. Demolish a portion of existing walkway under proposed building expansion per Architect's demo plan
8. Relocate existing irrigation boxes per Landscape Plans
9. Demolish a portion of existing curb and gutter for driveway access to new parking lot per C1.1
10. Relocate a portion (roughly 20 feet) of existing 8" water line under the southeasterly portion of proposed building. Exact limits of work shall be field determined prior to pad grading.

## Demolition Hatch Legend

- Proposed Building Expansion
- Proposed Parking Expansion
- Existing Building

***Benchmark:*** Elevations shown on this plan are based on the SCVWD benchmark BM321 located on top of sidewalk, 3 feet East of concrete headwall, at the corner of Edmundson Avenue and West Little Llagas Creek. City of Morgan Hill. ELEVATION = 330.37' (NAVD88).

JOB COPY
These plans mu[illegible] on the job at all times.
CITY OF MORGAN HILL
BUILDING DIVISION

WESTON MILES
ARCHITECT
7500 Depot Street, Suite #12
Morgan Hill, CA 95037
1 •408 • 779 • 6686
• Architecture • Landscape •

REGISTERED ARCHITECT — 3-27-19 — STATE OF CALIFORNIA

NOT VALID WITHOUT WET SIGNATURE

MH engineering Co.

CONSULTANT JOB NO: 217123

REGISTERED PROFESSIONAL ENGINEER — HARVINDER S. NEGI — C49717 — STATE OF CALIFORNIA — 3-27-19

REVISIONS

| | | |
|---|---|---|
| 1 | 01/30/2019 | PLAN REVIEW #1 |
| 2 | 03/27/2019 | PLAN REVIEW #2 |
| 2 | | |

# Site Topography Map & Demo Plan

CENTENNIAL RECREATION CENTER EXPANSION PROJECT

CITY OF MORGAN HILL
171 W EDMUNDSON AVE, MORGAN HILL, CA 95037

These drawings are instruments of service and are the property of WESTON MILES ARCHITECTS, INC. All designs, plans, specifications, and other documents are for use on the specified project and shall not be used otherwise without the expressed written permission of WESTON MILES ARCHITECTS, INC.

Written dimensions on these drawings shall have precedence over scale dimensions. Contractors shall verify and be responsible for all dimensions and conditions on the job and this office shall be notified of any variations from the dimensions and conditions shown by these drawings. Shop drawings shall be submitted to this office for approval before processing with fabrication.

© Copyrighted 2019

DATE: 3/27/2019

JOB NO: 18001

C1.0

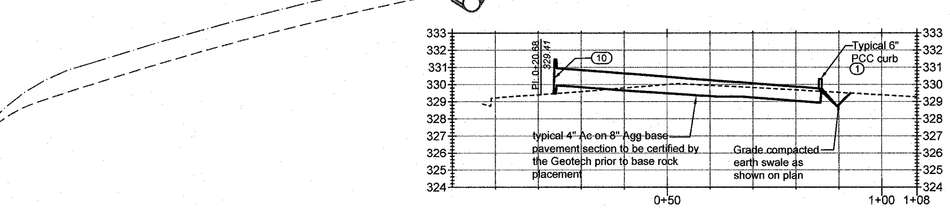


**PROFILE: Section S4**
SCALE H: 1"=20' SCALE V: 1"=5'

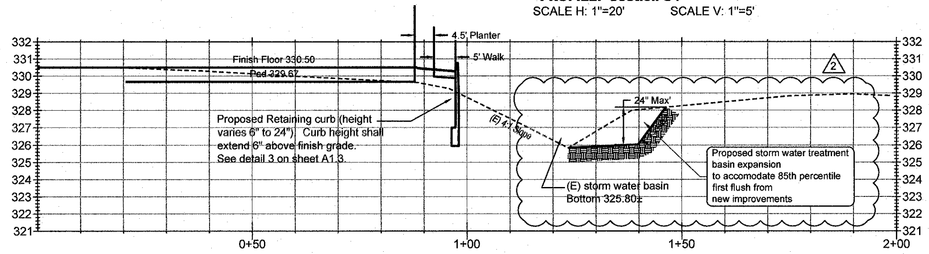


**PROFILE: Section S3**
SCALE H: 1"=20' SCALE V: 1"=5'

## Site Improvement Notes

1. Provide 8" wide drainage slots along the entire length of this 6" high curb @ 36" centers.
2. 4" PCC on 4" Agg Base walkway on #4 rebars @ 24" o/c both ways.
3. 6" Curb along walkway @ max 5%. Limits of curb as shown.
4. 6" wide Retaining curb. Retaining height varies 6"-24" above existing natural grade. Curb to extend 6" above finish grade. See Architectural plan A1.3 for curb detail 3.
5. Remove existing 12" storm drain under proposed building expansion
6. 12" Storm connection must be made to the (west) part of baffle wall, which is the upstream part of junction box to convey water into basin via existing 15" HDPE lateral.
7. Relocate existing irrigation boxes per landscape plans.
8. Approximate location existing Joint Trench with CATV & Telephone to be field located prior to any excavation for parking lot improvements.
9. Approximate location existing unknown dry utility (CATV?) Trench to be field located
10. Retaining curb, maximum height 18"-24", curb to extend 6" above pavement. See detail 3 on A1.3
11. Approximate location re-routed roof drains. See sheet A2.8. for exact location. Connect to existing storm drain as shown.
12. Approximate location roof leader from new building. See sheet A2.8 for exact location. Connect to existing storm drain as shown.
13. Adjust grade on existing storm inlet to match new walk finish grade
14. Replant expanded storm water basin with no mow grass in kind

## GRADING NOTES

1. ALL AREAS TO RECEIVE FILL SHALL BE STRIPPED TO A DEPTH TO BE DETERMINED BY THE SOILS ENGINEER. ANY A.C. OR P.C.C. PAVING SHALL BE SCARIFIED AND REMOVED AND SUBGRADE PREPARED AND COMPACTED PER SOIL ENGINEER'S RECOMMENDATIONS PRIOR TO ANY FILLING.
2. ALL MATERIAL TO BE USED AS FILL WITHIN BUILDING PAD AREAS AND PARKING OR DRIVEWAY AREAS TO BE FREE OF ALL VEGETATION AND FOREIGN MATTER.
3. CONTRACTOR SHALL STRICTLY FOLLOW RECOMMENDATIONS MADE BY THE SOILS ENGINEER FOR ALL GRADING (CUT OR FILL), COMPACTION AND UTILITY TRENCH BACKFILL PER GEOTECHNICAL UPDATE BY GEO-LOGIC Assoc (DATED 01-15-2019, PHONE (408) 778-2818.
4. STRIPPINGS MAY BE PLACED IN PLANTING AREA. ALL EXCESS STRIPPING SHALL BE HAULED AWAY. PAVING DEBRIS SHALL BE HAULED AWAY TO AN APPROVED DISPOSAL SITE.
5. ALL WORK SHOWN OR NOTED ON THESE PLANS SHALL BE DONE IN STRICT ACCORDANCE WITH THE RECOMMENDATIONS OF THE SOILS ENGINEER, ALL LOCAL, STATE AND FEDERAL MINIMUM STANDARDS AND THE LATEST EDITION OF THE CALIFORNIA BUILDING CODE. NOTIFY SOILS ENGINEER 4 WORKING DAYS PRIOR TO BEGINNING OF ANY GRADING.
6. CONNECTIONS TO EXISTING PUBLIC UTILITIES SHALL BE DONE WITH APPROVAL AND IN ACCORDANCE WITH THE UTILITY COMPANY'S OR PUBLIC AGENCY REQUIREMENTS AND STANDARDS.
7. CONTRACTORS SHALL PROTECT ALL EXISTING SITE IMPROVEMENTS NOT SCHEDULED FOR REMOVAL DURING CONSTRUCTION. THEY SHALL REPAIR ANY DAMAGE TO NEW CONDITION AT THEIR EXPENSE.
8. VERIFY ALL EXISTING SITE CONDITIONS, SITE DIMENSIONS AND GRADES PRIOR TO START OF WORK.
9. CONFORM TO THE RECOMMENDATIONS OF THE DRAWINGS, DETAILS AND SITE SOILS REPORT FOR COMPACTION, STRIPPING, GRADING PAVING, AND UTILITY TRENCHES.
10. SOIL COMPACTION TESTS SHALL BE PAID FOR BY THE OWNER/DEVELOPER AS PER NOTE 3.
11. ALL GRADING AND RELATED WORK SHALL BE PERFORMED IN ACCORDANCE WITH THE REQUIREMENTS OF THE CITY OF MORGAN HILL AND THE RECOMMENDATION OF THE SOILS ENGINEER.
12. CONTRACTOR SHALL VERIFY THE LOCATIONS OF ALL EXISTING SERVICES AND UNDERGROUND UTILITIES AND SEWERS. LOCATIONS SHOWN ON THE PLAN ARE APPROXIMATE AND SHOWN FOR GENERAL INFORMATION ONLY. CONTRACTOR SHALL CALL U.S.A. AT 800-642-2444 48 HOURS PRIOR TO UNDERGROUND WORK FOR FIELD LOCATOR SERVICE.
13. CONTRACTOR SHALL VERIFY THE LOCATIONS OF THE BUILDING AND PARKING IMPROVEMENTS FROM THE ARCHITECT'S DIMENSIONED DRAWINGS.
14. ANY VOIDS CREATED BY STRUCTURE REMOVAL, TREE REMOVAL, SEPTIC TANK AND LEACH LINE OR ANY OTHER SITE ITEM REMOVAL MUST BE BACKFILLED WITH PROPERLY COMPACTED NATIVE SOILS THAT ARE FREE OF ORGANICS AND OTHER DELETERIOUS MATERIALS OR WITH APPROVED IMPORT FILL AND COMPACTED TO THE SOILS ENGINEERS RECOMMENDATIONS.
15. THE CONTRACTOR SHALL FOLLOW ALL APPLICABLE INDUSTRIAL SAFETY REGULATIONS. THE CITY OF MORGAN HILL AND ITS OFFICIALS, THE ENGINEER, AND THE OWNER SHALL NOT BE RESPONSIBLE FOR ENFORCING SAFETY REGULATIONS.
16. THE CONTRACTOR SHALL BE FULLY RESPONSIBLE FOR PLACEMENT OF ALL SAFETY DEVICES SUCH AS FENCING BARRICADES, SAFETY TAPE, ETC., AND HE SHALL FOLLOW ALL APPLICABLE INDUSTRIAL SAFETY REGULATIONS. THE CITY OF MORGAN HILL AND ITS OFFICIALS, THE ARCHITECT, AND THE OWNER SHALL NOT BE RESPONSIBLE FOR ENFORCING SAFETY REGULATIONS.
17. THE CONTRACTOR IS RESPONSIBLE FOR THE PROTECTION OR PROPER RESETTING OF ALL EXISTING MONUMENTS AND OTHER SURVEY MARKERS. ANY SURVEY MONUMENTS DESTROYED BY THE CONTRACTOR SHALL BE REPLACED IN ACCORDANCE WITH THE STATE LAND SURVEYOR'S ACT AT THE CONTRACTOR'S OWN EXPENSE.
18. THE CONTRACTOR SHALL POTHOLE AND VERIFY ALL EXISTING UTILITY LOCATIONS AND ELEVATIONS PRIOR TO COMMENCEMENT OF WORK IN THAT AREA.
19. ANY DEVIATION FROM THESE PLANS WITHOUT PRIOR APPROVAL FROM THE DESIGN ENGINEER SHALL BE AT THE CONTRACTOR'S OWN RISK AND EXPENSE.
20. PROVIDE EROSION CONTROL PLANTING FOR ALL FRESH CUT AND FILL SLOPES AND ON ALL DISTURBED SURFACES OTHER THAN PAVED OR GRAVEL SURFACES. PERMANENT
21. CONTRACTOR SHALL BE RESPONSIBLE FOR THE PLACEMENT AND MAINTENANCE OF ALL EROSION CONTROL DEVICES AS SPECIFIED BY THE ENGINEER OF WORK AND APPROVED BY THE CITY ENGINEER. THESE DEVICES SHALL BE IN PLACE OR BE READY TO PLACE FROM SEPTEMBER 15TH TO MAY 1ST. IN THE EVENT THAT THE DEVICES ARE NOT PERMANENTLY IN PLACE THEY SHALL BE PLACED IN THE EVENT A FORECAST FOR RAIN EXCEEDS 30%. AN EMERGENCY CREW SHALL BE AVAILABLE 24 HRS A DAY IN THE EVENT AN EROSION PROBLEM SHOULD OCCUR. A RESPONSIBLE PERSON AND HIS PHONE NUMBER SHALL BE KEPT ON CITY FILES.
22. THE CONTRACTOR SHALL BE RESPONSIBLE TO CONTACT THE ENGINEER OF RECORD AND THE CITY INSPECTOR AT LEAST 24 HOURS PRIOR TO POUR OF CONCRETE IN ORDER TO VERIFY LINE AND GRADE OF THE FORMWORK AND SUBGRADE. IN THE EVENT THE CONTRACTOR POURS CONCRETE WITHOUT PROPER NOTIFICATION HE IS RESPONSIBLE FOR REMOVAL AND REPLACEMENT COSTS OF THE IMPROVEMENTS CONSTRUCTED IN THE EVENT THE IMPROVEMENTS ARE REJECTED. ALL IMPROVEMENTS CONSTRUCTED WITHOUT PROPER FORM INSPECTION WILL BE AT THE CONTRACTOR'S RISK.
23. CONTRACTOR SHALL VERIFY ALL ITEMS SHOWN ON PLANS. SHOULD ANY DISCREPANCIES ARISE, CONTRACTOR SHALL NOTIFY ENGINEER IMMEDIATELY. SHOULD CONTRACTOR PROCEED WITHOUT NOTIFYING THE ENGINEER HE SHALL DO SO AT HIS OWN RISK.

JOB COPY
These plans must be kept on the job at all times.
CITY OF MORGAN HILL
BUILDING DIVISION

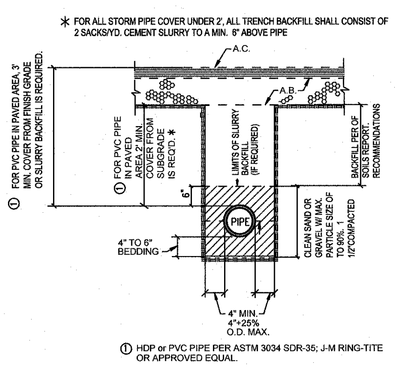


TYPICAL TRENCH DETAIL
N.T.S.

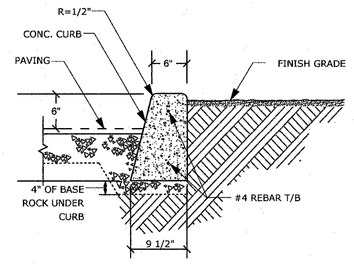


6" CONC CURB @ LANDSCAPE (2 / C1.1)
N.T.S.

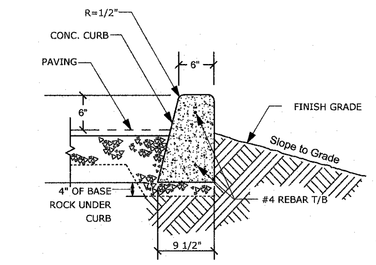


6" CONC CURB (1 / C1.1)
N.T.S.

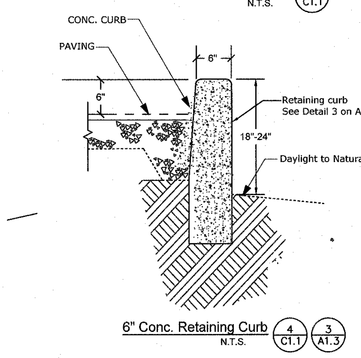


6" Conc. Retaining Curb (4 / C1.1) (3 / A1.3)
N.T.S.

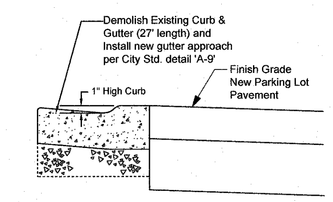


MODIFIED 1" CURB AND GUTTER @ DRIVE ACCESS (3 / C1.1)
N.T.S.


WESTON MILES
ARCHITECT
7500 Depot Street, Suite #12
Morgan Hill, CA 95037
1 •408 • 779 • 6686
• Architecture • Landscape •


REGISTERED ARCHITECT
STATE OF CALIFORNIA
NOT VALID WITHOUT WET SIGNATURE

MH engineering Co.
CONSULTANT JOB NO: 217123

REGISTERED PROFESSIONAL ENGINEER
TIMOTHY S. NOLAN
C49717
EXP. 9-30-2019
STATE OF CALIFORNIA
3-27-19

REVISIONS
1 01/30/2019 PLAN REVIEW #1
2 03/27/2019 PLAN REVIEW #2
2

# Grading & Utility Plan-Site Improvements

## CENTENNIAL RECREATION CENTER EXPANSION PROJECT

CITY OF MORGAN HILL
171 W EDMUNDSON AVE, MORGAN HILL, CA 95037


These drawings are instruments of service and are the property of WESTON MILES ARCHITECTS. All designs and other information on the drawings are for use on the specified project and shall not be used otherwise without the written permission of WESTON MILES ARCHITECTS, INC.


Written dimensions on these drawings shall have precedence over scaled dimensions. Contractors shall verify and be responsible for all dimensions and conditions on the job and WESTON MILES ARCHITECTS must be informed of any dimensions and conditions shown by these drawings. Shop details shall be submitted to this office for approval before proceeding with fabrication.


© Copyrighted 2019


DATE: 03/27/2019
JOB NO.: 18001

C1.1

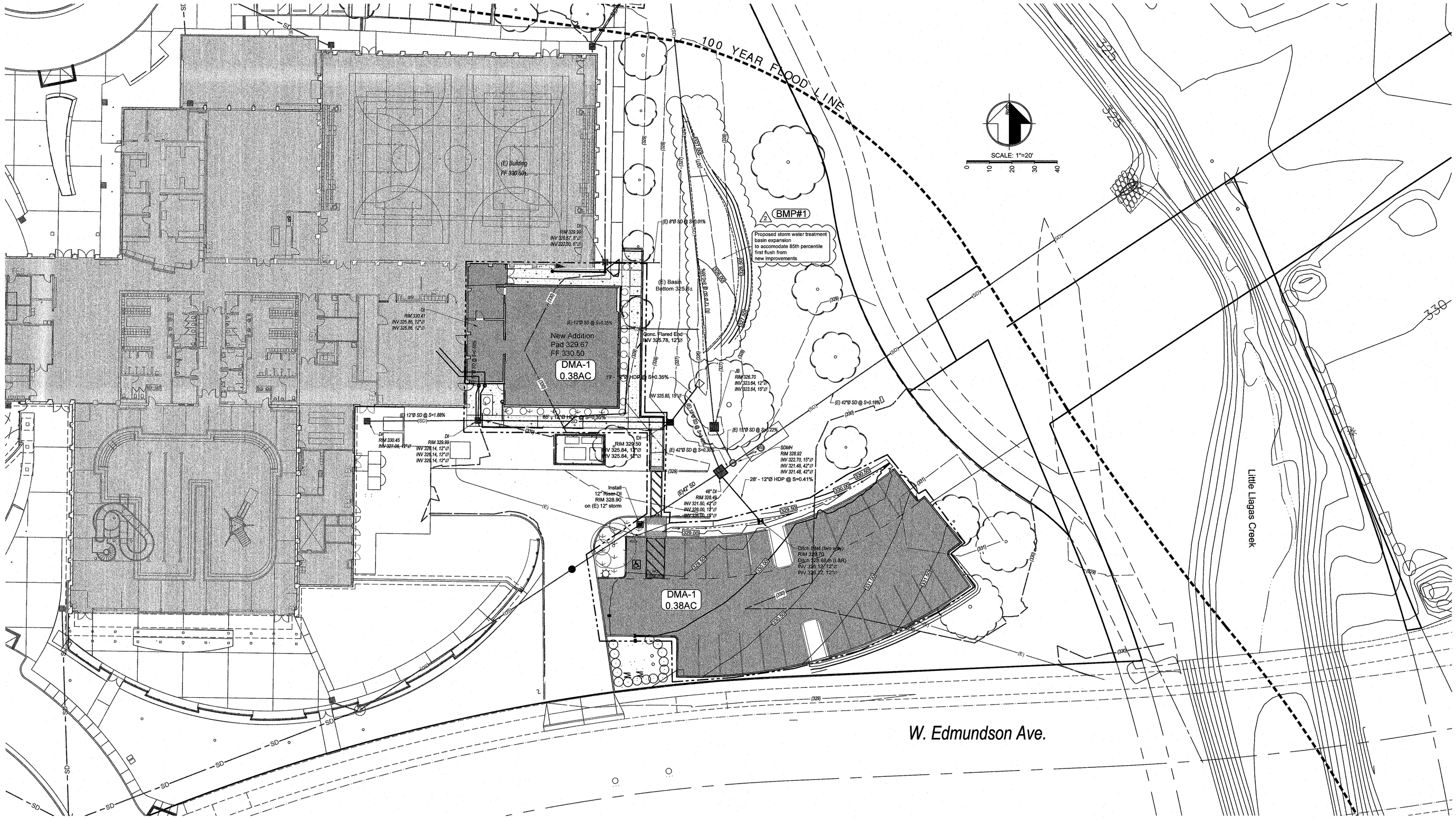


## Hatch Legend

- Proposed Building Expansion
- Proposed Parking Expansion
- Existing Building

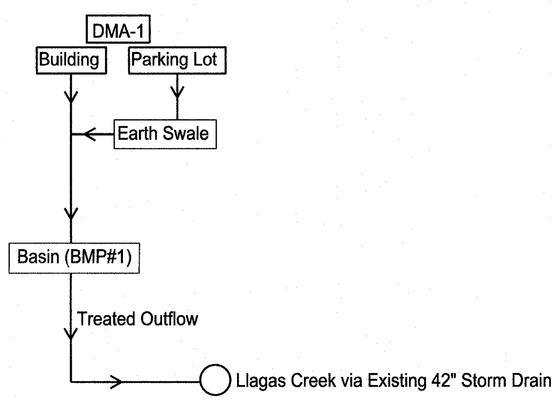


"CRC Expansion" - LID Calcs for PR2

| DMA# | DMA area (AC) | DMA Impervious Area: Parking Lot & Hardscape | DMA Impervious Area: Roof Area | 85th Percentile (1.2" Rain) First Flush Volume to Treat (C.F.) | 95th Percentile (1.8" Rain) First Flush Volume to Treat (C.F.) | BMP# | Proposed BMP Surface Area (S.F.) | BMP Volume (C.F.) | Native Soil Infiltration Rate (in/Hr.) | BMP Loading Depth (Inches) | BMP Infiltration Duration (Hrs.) ≤ 48 |
|---|---|---|---|---|---|---|---|---|---|---|---|
| 1 | 0.38 | 9,088 | 4,012 | 1,310 | 1,965 | #1 | 835 | 1,377 | N/A | N/A | N/A |
| Total Projet Expansion Area | | | | 0.38 ac | | BMP#1- Expansion of existing Vegetated Detention & Storm Water Treatment Basin | | | | | |
| Total New Impervious Area | | | | 13,100 | | | | | | | |
| Total Replaced Impervious Area | | | | 559 sf | | | | | | | |
| Total New Pervious Area | | | | 3,452 sf | | | | | | | |
| Net Impervious Area | | | | 13,100 sf | | | | | | | |

JOB COPY
These plans must be kept on the job at all times.
CITY OF MORGAN HILL
BUILDING DIVISION


WESTON MILES
ARCHITECT
7500 Depot Street, Suite #12
Morgan Hill, CA 95037
1 •408 • 779 • 6686
• Architecture • Landscape •


REGISTERED ARCHITECT — STATE OF CALIFORNIA — EXPIRES 9-30-19

NOT VALID WITHOUT WET SIGNATURE

MH engineering Co.
CONSULTANT JOB NO: 217123

REGISTERED PROFESSIONAL ENGINEER — HATHRIDER STACK — C49717 — EXP. 9-30-2019 — STATE OF CALIFORNIA
3-27-19

REVISIONS
1 01/30/2019 PLAN REVIEW #1
2 03/27/2019 PLAN REVIEW #2
2

# Storm Water Management Plan

## CENTENNIAL RECREATION CENTER EXPANSION PROJECT

CITY OF MORGAN HILL
171 W EDMUNDSON AVE, MORGAN HILL, CA 95037


These drawings are instruments of service and are the property of WESTON MILES ARCHITECTS, INC. The designs and other information on the drawings are for use on the specified project and shall not be used otherwise without the expressed written permission of WESTON MILES ARCHITECTS, INC.

Written dimensions on these drawings shall have precedence over scaled dimensions. Contractors shall verify and be responsible for all dimensions and conditions on the job and this office shall be notified of any variations from the dimensions and conditions shown by these drawings. Shop drawings must be submitted to this office for approval before proceeding with fabrication.

© Copyrighted 2019


DATE: 3/27/2019
JOB NO: 18001

C1.2

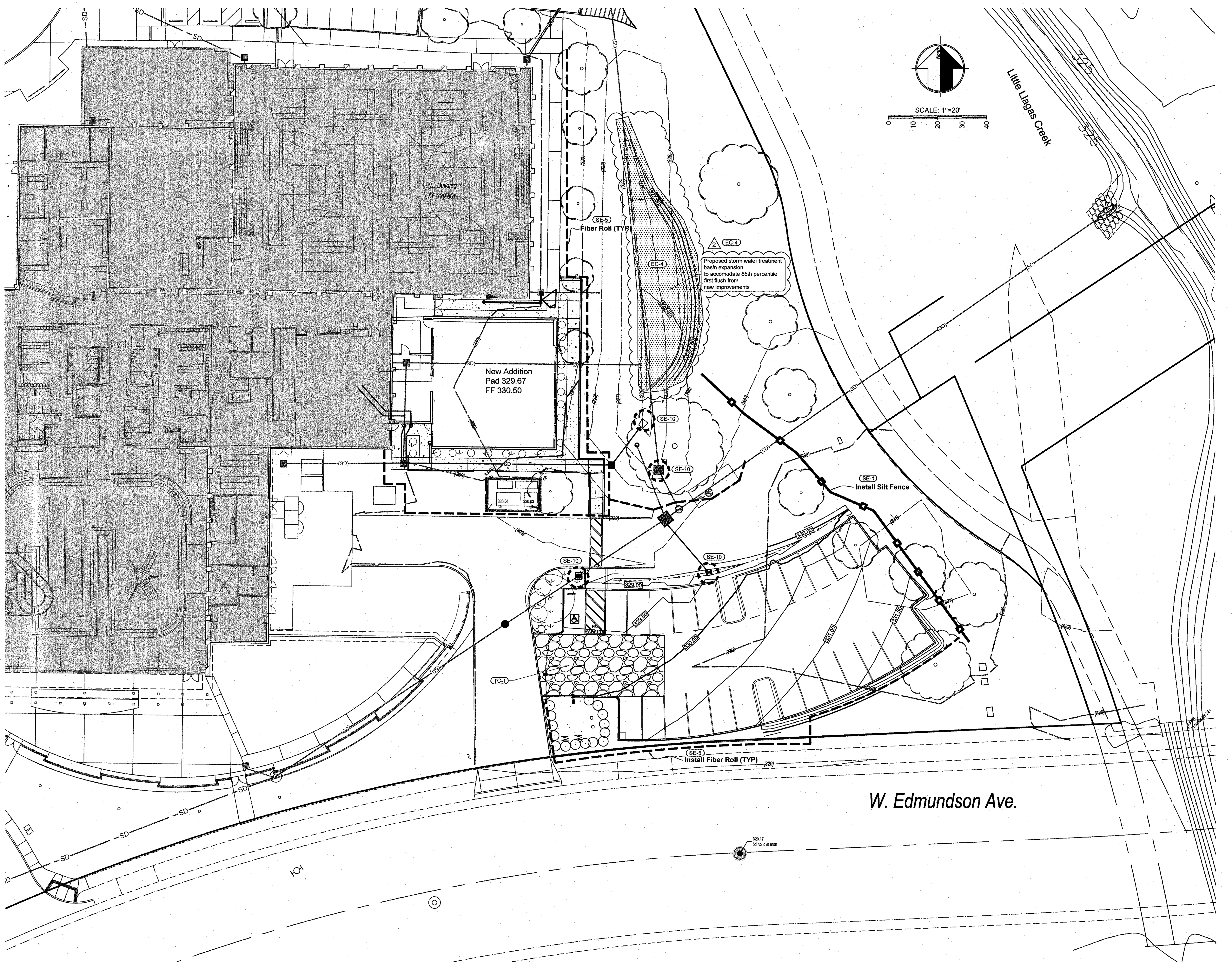


**Notes: EC-4 Hydroseeding**
**Inspection and Maintenance**
- Inspect BMPs prior to forecast rain, daily during extended rain events, after rain events, weekly during rainy season, and at two-week intervals during the non-rainy season.
- Areas where erosion is evident shall be repaired and BMPs re-applied as soon as possible. Care should be exercised to minimize the damage to protected areas while making repairs, as any area damaged will require re-application of BMPs.
- Where seeds fail to germinate, or they germinate and die, the area must be re-seeded, fertilized, and mulched within planting season, using not less than half the original application rates.
- Irrigation systems, if applicable, should be inspected daily while in use to identify system malfunctions and line breaks. When line breaks are detected, the system must be shut down immediately and breaks repaired before the system is put back into operation.
- Irrigation systems shall be inspected for complete coverage and adjusted as needed to maintain complete coverage.

**Notes: SE-5 Fiber Rolls**
**Installation**
- Locate fiber rolls on level contours spaced as follows:
  - Slope inclination of 4:1 (H:V) or flatter: Fiber rolls should be placed at a maximum interval of 20 ft.
  - Slope inclination between 4:1 and 2:1 (H:V): Fiber Rolls should be placed at a maximum interval of 15 ft. (a closer spacing is more effective).
  - Slope inclination 2:1 (H:V) or greater: Fiber Rolls should be placed at a maximum interval of 10 ft. (a closer spacing is more effective).
- Turn the ends of the fiber roll up slope to prevent runoff from going around the roll.
- Stake fiber rolls into a 2 to 4 in. deep trench with a width equal to the diameter of the fiber roll.
  - Drive stakes at the end of each fiber roll and spaced 4 ft maximum on center.
  - Use wood stakes with a nominal classification of 0.75 by 0.75 in. and minimum length of 24 in.
- If more than one fiber roll is placed in a row, the rolls should be overlapped, not abutted.

Inspection and Maintenance
- Inspect BMPs prior to forecast rain, daily during extended rain events, after rain events, weekly during the rainy season, and at two-week intervals during the non-rainy season.
- Repair or replace split, torn, unraveling, or slumping fiber rolls.
- If the fiber roll is used as a sediment capture device, or as an erosion control device to maintain sheet flows, sediment that accumulates in the BMP must be periodically removed in order to maintain BMP effectiveness. Sediment should be removed when sediment accumulation reaches one-half the designated sediment storage depth, usually one-half the distance between the top of the fiber roll and the adjacent ground surface. Sediment removed during maintenance may be incorporated into earthwork on the site of disposed at an appropriate location.
- If fiber rolls are used for erosion control, such as in a mini check dam, sediment removal should not be required as long as the system continues to control the grade. Sediment control BMPs will likely be required in conjunction with this type of application.

**Notes: SE-10 Storm Drain Inlet Protection**
**Installation**
- **DI Protection Type 2 - Excavated Drop Inlet Sediment Trap** - The excavated drop inlet sediment trap (Type 2) is shown in the attached figures. Install filter fabric fence in accordance with DI Protection Type 1. Size excavated trap to provide a minimum storage capacity calculated at the rate 67 yd3/acre of drainage area.
- **Inspection and Maintenance**
- Inspect BMPs prior to forecast rain, daily during extended rain events, after rain events, weekly during the rainy season, and at two-week intervals during the non-rainy season.
- Filter Fabric Fences. If the fabric becomes clogged, torn, or degrades, it should be replaced. Make sure the stakes are securely driven in the ground and are in good shape (i.e., not bent, cracked, or splintered, and are reasonably perpendicular to the ground). Replace damaged stakes.
- Gravel Filters. If the gravel becomes clogged with sediment, it must be carefully removed from the inlet and either cleaned or replaced. Since cleaning gravel at a construction site may be difficult, consider using the sediment-laden stone as fill material and put fresh stone around the inlet. Inspect bags for holes, gashes, and snags, and replace bags as needed. Check gravel bags for proper arrangement and displacement.
- Sediment that accumulates in the BMP must be periodically removed in order to maintain BMP effectiveness. Sediment should be removed when the sediment accumulation reaches one-third of the barrier height. Sediment removed during maintenance may be incorporated into earthwork on the site ore disposed at an appropriate location.
- Remove storm drain inlet protection once the drainage area is stabilized.
- Clean and regrade area around the inlet and clean the inside of the storm drain inlet as it must be free of sediment and debris at the time of final inspection.

BMPs required by construction phase
Mass Grading / Clearing & Gubbing phase
- SE-1 Silt fence around perimeter of disturbed areas
- TC-1 Stabilized construction entrance @ entry/exit points to paved roads
- SE-5 Fiber Rolls around temporary stockpiles
- SE-6 Gravel bags at ends of gutters at project limits
- SE-10 Storm drain inlet protection at inlets in project vicinity
- EC-4 Hydroseed distubed areas upon completion of grading in areas that are not subject to further disturbance

Underground Utilities phase
- SE-1 Silt fence around perimeter of project site
- SE-5 Fiber Rolls around temporary stockpiles/trench spoils
- SE-6 Gravel bags at ends of gutters at project limits
- SE-10 Storm drain inlet protection at inlets in project vicinity and installed inlets
- TC-1 Stabilized construction entrance @ entry/exit points to paved roads

General Notes:
1. The erosion control measures are to be operable during the rainy season,September 15 to May 1. By September 15, grading, installation of storm drainage and erosion control facilities will need to be completed with erosion control planting established by that time. No grading shall occur between October 1 and May 1 unless authorized by the City Engineer.
2. Standard drop inlet, underground drainage pipe and appurtenances shall be constructed prior to winterization and will remain as permanent improvements.
3. Changes to this erosion and sediment control plan shall be made to meet field conditions only with the approval of or at the direction of the City Engineer. During the rainy season, all paved areas shall be kept clear of earth material and debris. the site shall be maintained so as to minimize sediment laden runoff to any storm drainage system.
4. This plan covers only the first winter following grading. Plans are to be resubmitted for City approval prior to September 1 of each subsequent year until the improvements are accepted by the City.
5. Seed and mulch are to be placed on all disturbed slopes steeper than 2% and higher than 3 feet, on all cut and fill slopes within or adjacent to all public rights of way and as directed by the City. Seed placed between May and September shall be irrigated as necessary to establish growth by October 1.
6. Stabilized entrance shall be installed per detail TC-1&TC-3 rior to grading activities.
7. Drain inlets shall be protected per details SE-10 prior to grading activities or as soon as practical.
8. Sediment control BMPs shall be installed prior to grading activities or as soon as practical, and maintained year round.

BMPs required by construction phase (continue)
Vertical Construction phase
- SE-1 Silt fence around perimeter of project site
- SE-5 Fiber Rolls around stockpiles and at back of sidewalks once installed
- SE-6 Gravel bags at ends of gutters at project limits
- SE-10 Storm drain inlet protection at inlets in project vicinity and at any installed inlets
- TC-1 Stabilized construction entrance @ entry/exit points to paved roads
- EC-4 Hydroseed disturbed areas that are not subject to further disturbance.

Stabilization phase
- SE-1 Silt fence around perimeter to remain in place until final landscaping is established
- SE-5 Fiber Rolls to remain in place until final landscaping is complete
- SE-6 Gravel bags to remain in place until final landscaping is established
- SE-10 Storm drain inlet protection to remain in place until final landscaping is established
- EC-4 Hydroseed all non-landscaped disturbed areas in project vicinity

**Notes: TC-1 Stabilized Construction Entrance/Exit**
**Inspection and Maintenance**
- Inspect and verify that activity–based BMPs are in place prior to the commencement of associated activities. While activities associated with the BMPs are under way, inspect weekly during the rainy season and of two-week intervals in the non-rainy season to verify continued BMP implementation.
- Inspect local roads adjacent to the site daily. Sweep or vacuum to remove visible accumulated sediment.
- Remove aggregate, separate and dispose of sediment if construction entrance/exit is clogged with sediment.
- Keep all temporary roadway ditches clear.
- Check for damage and repair as needed.
- Replace gravel material when surface voids are visible.
- Remove all sediment deposited on paved roadways within 24 hours.
- Remove gravel and filter fabric at completion of construction

Notes: SE-1 Silt Fence
Installation Guidelines
- Silt fences are to be constructed on a level contour. Sufficient area should exist behind the fence for ponding to occur without flooding or overtopping the fence.
- A trench should be excavated approximately 6 in. wide and 6 in. deep along the line the proposed silt fence.
- Bottom of the silt fence should be keyed-in a minimum of 12 in.
- Posts should be spaced a maximum of 6 ft apart and driven securely into the ground a minimum of 18 in. or 12 in. below the bottom of the trench.
- When standard strength filter fabric is used, a plastic or wire mesh support fence should be fastened securely to the upslope side of posts using heavy–duty wire staples at least 1 in. long. The mesh should extend into the trench. When extra-strength filter fabric and closer post spacing are used, the mesh support fence may be eliminated. Filter fabric should be purchased in a long roll, then cut to the length of the barrier. When joints are necessary, filter cloth should be spliced together only at a support post, with a minimum 6 in. overlap and both ends securely fastened to the post.
- The trench should be backfilled with compacted native material.
- Construct silt fences with a setback of at least 3 ft from the toe of a slope. Where a silt fence is determined to be not practicable due to specific site conditions, the silt fence may be constructed at the toe of the slope, but should be constructed as far from the toe of the slope as practicable. Silt fences close to the toe of the slope will be less effective and difficult to maintain.

Inspection and Maintenance
- Inspect BMPs prior to forecast rain, daily during extended rain events, after rain events, weekly during the rainy season, and at two-week intervals during the non-rainy season.
- Repair undercut silt fences.
- Repair or replace split, torn, slumping, or weathered fabric. The lifespan of silt fence fabric is generally 5 to 8 months.
- Silt fences that are damaged and become unsuitable for the intended purpose should be removed from the site of work, disposed of, and replaced with new silt fence barriers.
- Sediment that accumulates in the BMP must be periodically removed in order to maintain BMP effectiveness. Sediment should be removed when the sediment accumulation reaches one-third of the barrier height. Sediment removed during maintenance may be incorporated into earthwork on the site or disposed at an appropriate location.
- Silt fences should be left in place until the upstream area is permanently stabilized. Until then, the silt fence must be inspected and maintained.
- Holes, depressions, or other ground disturbance caused by the removal of the silt fences should be backfilled and repaired.

## EC-4 Hydroseeding

**Implementation**
In order to select appropriate hydroseeding mixtures, an evaluation of site conditions shall be performed with respect to:

- Soil conditions - Maintenance requirements
- Site topography - Sensitive adjacent areas
- Season and climate - Water availability
- Vegetation types - Plans for permanent vegetation

The local office of the U.S.D.A. Natural Resources Conservation Service (NRCS) is an excellent source of information on appropriate seed mixes.

The following steps shall be followed for implementation:

- Avoid use of hydroseeding in areas where the BMP would be incompatible with future earthwork activities and would have to be removed.
- Hydroseeding can be accomplished using a multiple step or one step process. The multiple step process ensures maximum direct contact of the seeds to soil. When the one step process is used to apply the mixture of fiber, seed, etc., the seed rate shall be increased to compensate for all seeds not having direct contact with the soil.
- Prior to application, roughen the area to be seeded with the furrows trending along the contours.
- Apply a straw mulch to keep seeds in place and to moderate soil moisture and temperature until the seeds germinate and grow.
- All seeds shall be in conformance with the California State Seed Law of the Department of Agriculture. Each seed bag shall be delivered to the site sealed and clearly marked as to species, purity, percent germination, dealer's guarantee, and dates of test. The container shall be labeled to clearly reflect the amount of Pure Live Seed (PLS) contained. All legume seed shall be pellet inoculated. Inoculant sources shall be species specific and shall be applied at a rate of 2 lb of inoculant per 100 lb seed.
- Commercial fertilizer shall conform to the requirements of the California Food and Agricultural Code. Fertilizer shall be pelleted or granular form.
- Follow up applications shall be made as needed to cover weak spots and to maintain adequate soil protection.
- Avoid over spray onto roads, sidewalks, drainage channels, existing vegetation, etc.

**Costs**
Average cost for installation and maintenance may vary from as low as $900 per acre for flat slopes and stable soils, to $1600 per acre for moderate to steep slopes and/or erosive soils.



## SE-5 Fiber Rolls

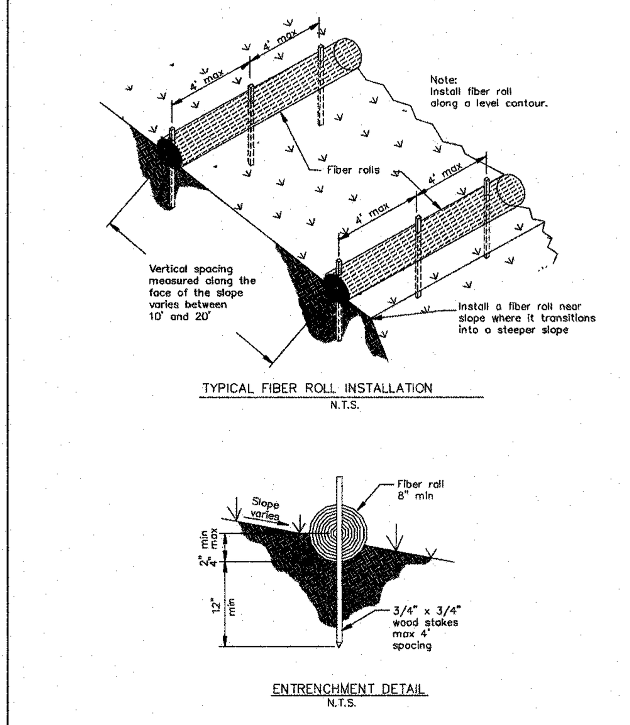




## Hydroseeding EC-4

| Hydroseeding | | Installed Cost per Acre |
|---|---|---|
| High Density | Ornamentals | $400 - $1600 |
| | Turf Species | $350 |
| | Bunch Grasses | $300 - $1300 |
| Fast Growing | Annual | $350 - $650 |
| | Perennial | $300 - $800 |
| Non-Competing | Native | $300 - $1600 |
| | Non-Native | $400 - $500 |
| Sterile | Cereal Grain | $500 |

Source: Caltrans Guidance for Soil Stabilization for Temporary Slopes, Nov. 1999

**Inspection and Maintenance**
- Inspect BMPs prior to forecast rain, daily during extended rain events, after rain events, weekly during the rainy season, and at two-week intervals during the non-rainy season.
- Areas where erosion is evident shall be repaired and BMPs re-applied as soon as possible. Care should be exercised to minimize the damage to protected areas while making repairs, as any area damaged will require re-application of BMPs.
- Where seeds fail to germinate, or they germinate and die, the area must be re-seeded, fertilized, and mulched within the planting season, using not less than half the original application rates.
- Irrigation systems, if applicable, should be inspected daily while in use to identify system malfunctions and line breaks. When line breaks are detected, the system must be shut down immediately and breaks repaired before the system is put back into operation.
- Irrigation systems shall be inspected for complete coverage and adjusted as needed to maintain complete coverage.

**References**

Stormwater Quality Handbooks Construction Site Best Management Practices (BMPs) Manual, State of California Department of Transportation (Caltrans), November 2000.

Guidance Document: Soil Stabilization for Temporary Slopes, State of California Department of Transportation (Caltrans), November 1999.




## Storm Drain Inlet Protection SE-10

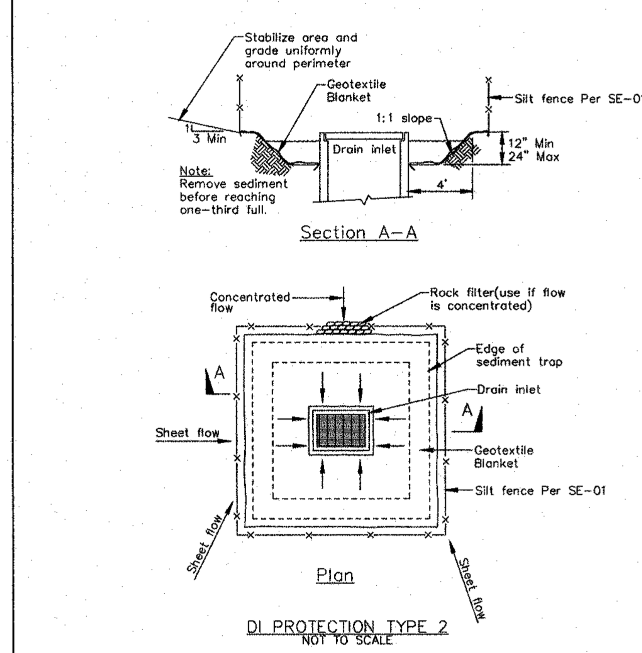


Notes
1. For use in cleared and grubbed and in graded areas.
2. Shape basin so that longest inflow area faces longest length of trap.
3. For concentrated flows, shape basin in 2:1 ratio with length oriented towards direction of flow.



## Stabilized Construction Entrance/Exit TC-1

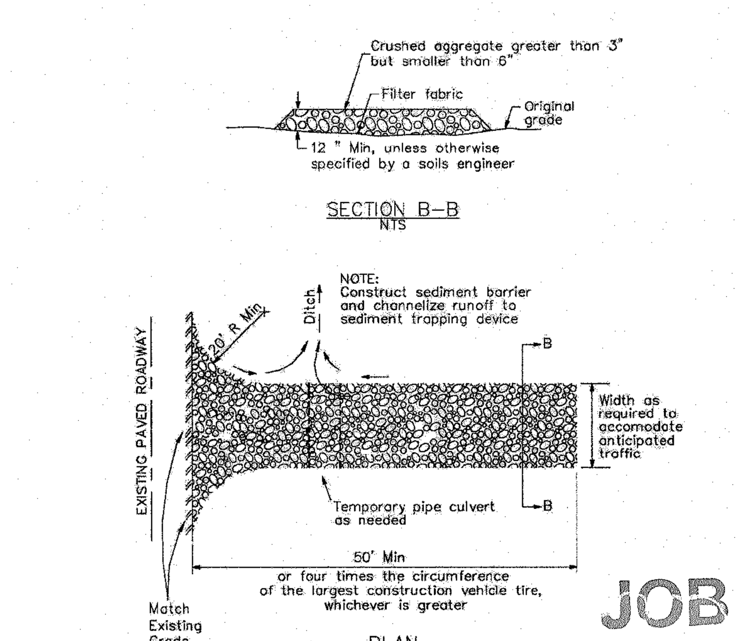


JOB COPY
These plans must be kept on the job at all times.
CITY OF MORGAN HILL
BUILDING DIVISION



## SE-10 Storm Drain Inlet Protection

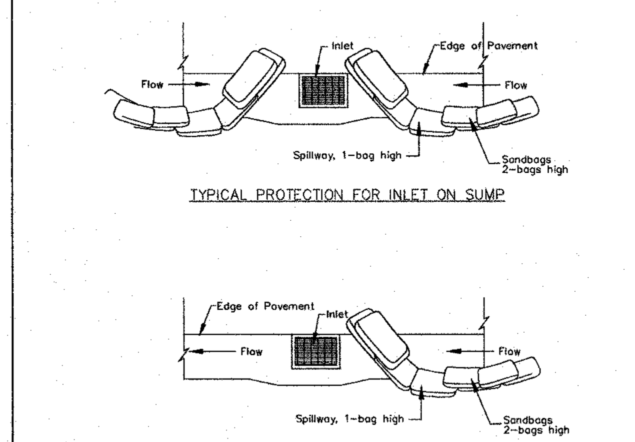


NOTES:
1. Intended for short-term use.
2. Use to inhibit non-storm water flow.
3. Allow for proper maintenance and cleanup.
4. Bags must be removed after adjacent operation is completed
5. Not applicable in areas with high silts and clays without filter fabric.

DI PROTECTION TYPE 3
NOT TO SCALE



## Legend

| | |
|---|---|
| SE-5 | Fiber Rolls |
| SE-10 | Storm drain inlet protection |
| EC-4 | Hydroseed with Tacifier & Mulch in disturbed areas |
| SE-1 | Silt Fence |

## SE-1 Silt Fence

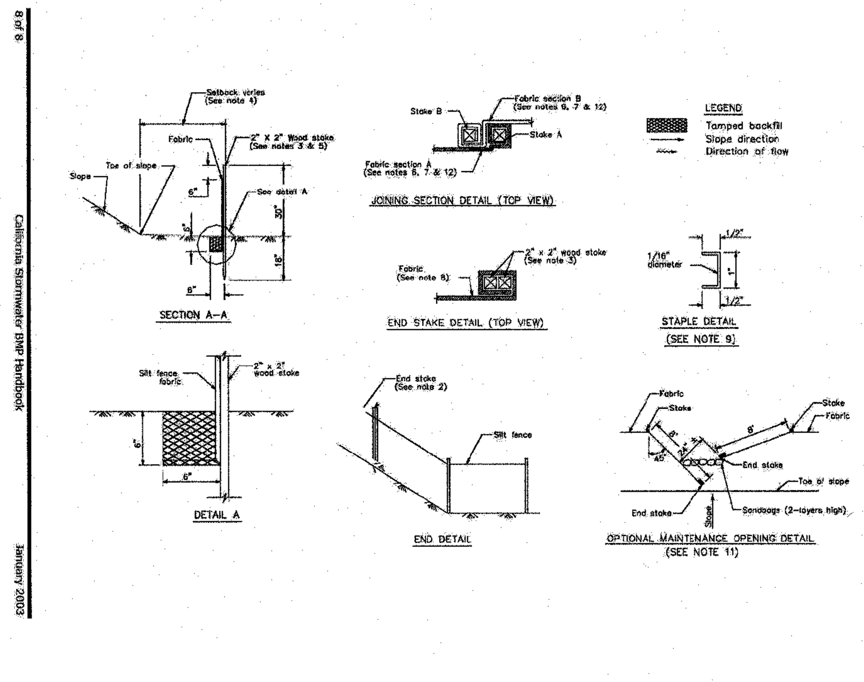




WESTON MILES ARCHITECT
7500 Depot Street, Suite #12
Morgan Hill, CA 95037
1 • 408 • 779 • 6686
• Architecture • Landscape •

LICENSED ARCHITECT · WESLEY L. MILES · 9-30-15 · STATE OF CALIFORNIA
NOT VALID WITHOUT WET SIGNATURE

MH engineering Co.
CONSULTANT JOB NO: 217123

REGISTERED PROFESSIONAL ENGINEER · HARINDER SINGLA · C49717 · EXP. 9-30-2019 · STATE OF CALIFORNIA
3-27-19

REVISIONS
1 01/30/2019 PLAN REVIEW #1
2 03/27/2019 PLAN REVIEW #2
2

# Erosion and Sediment Control Plan

## CENTENNIAL RECREATION CENTER EXPANSION PROJECT

CITY OF MORGAN HILL
171 W EDMUNDSON AVE, MORGAN HILL, CA 95037

These drawings are instruments of service and are the property of WESTON MILES ARCHITECTS, INC. All designs and other information on the drawings are for use on the specified project and shall not be used otherwise without the expressed written permission of WESTON MILES ARCHITECTS, INC.

Written dimensions on these drawings shall have precedence over scaled dimensions. Contractors shall verify and be responsible for all dimensions and conditions on the job and this office shall be notified of any variations from the dimensions and conditions shown by these drawings. Shop details shall be submitted to this office for approval before proceeding with fabrication.

© Copyrighted 2019

DATE: 3/27/2019
JOB NO: 18001

C1.3

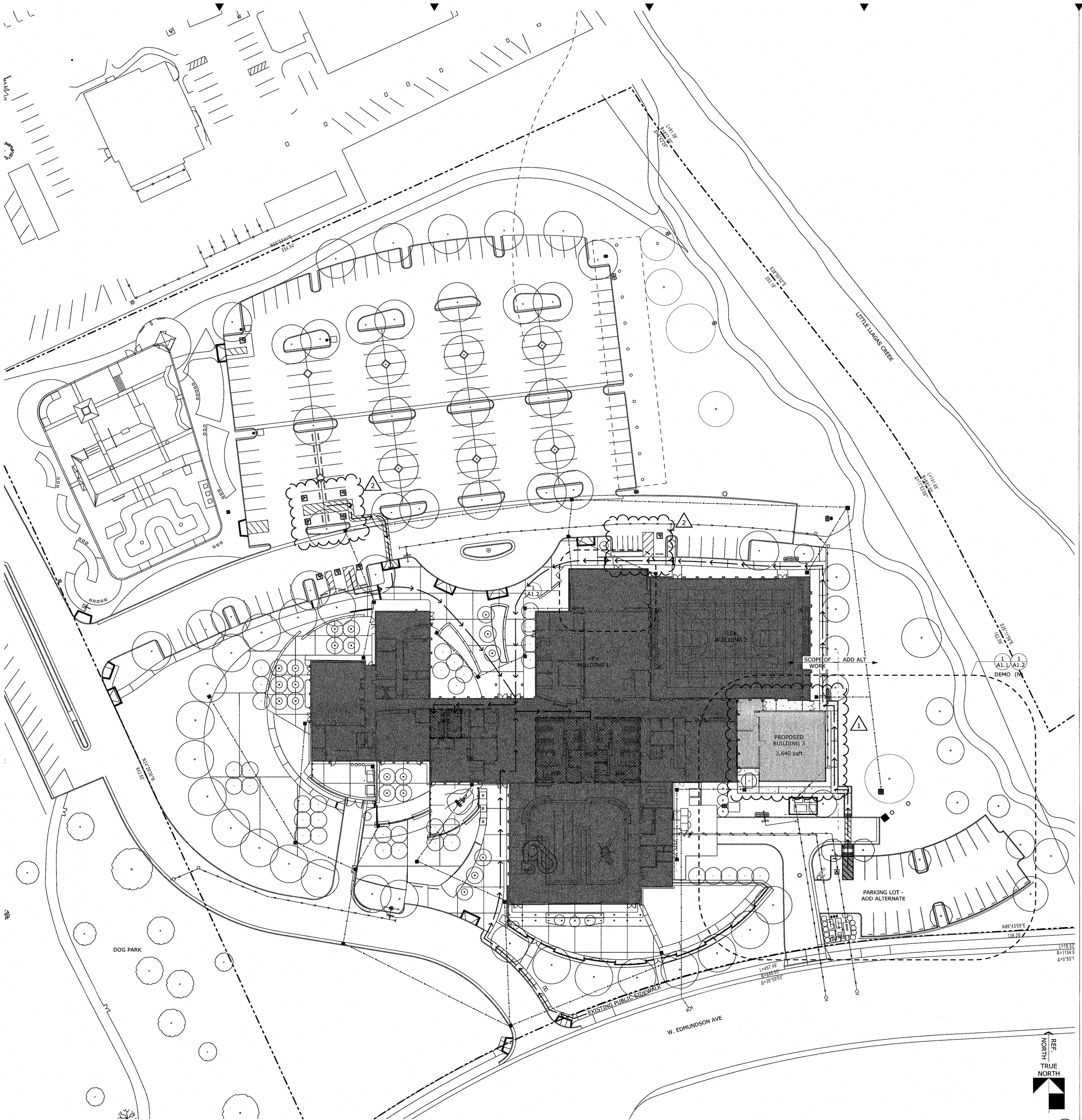


BUILDING ANALYSIS
SCALE: 1" = 30'

## SITE & BUILDING ANALYSIS

| | |
|---|---|
| <E> TOTAL GROSS FLOOR AREA: | 54,119 SQFT |
| PROPOSED TOTAL GROSS FLOOR AREA: | 3,640 SQFT |
| NEW TOTAL GROSS FLOOR AREA: | 57,7859 SQFT |
| <E> TOTAL ASSIGNABLE FLOOR AREA: | 44,515 SQFT |
| PROPOSED TOTAL ASSIGNABLE FLOOR AREA: | 3,050 SQFT |
| NEW TOTAL ASSIGNABLE FLOOR AREA: | 47,565 SQFT |

PROPOSED FLOOR AREAS:

| | |
|---|---|
| BUILDING 1 | |
| A3 | 20,593 |
| B | 9,511 |
| E3 | 1,029 |
| S1 | 2,840 |
| BUILDING 2 | |
| A2.1 | 10,542 |
| BUILDING 3 | |
| A3 | 2,610 |
| S1 | 440 |

ALLOWABLE AREA INCREASE (SPRINKLERED)

| | |
|---|---|
| BUILDING 3 | |
| A3 | 24,000 + (6,000 X .75) = 28,500 |
| S1 | 36,000 + (9,000 X .75) = 42,750 |

SUM OF RATIOS

| | |
|---|---|
| BUILDING 3 | |
| A3 | 2,610/ 28,500 = 0.09157 |
| S1 | 440 / 42,750 = 0.01029 |
| TOTAL | = .10186 < 1 |

2

## PARKING RATIO

NUMBER OF PARKING SPACES PROVIDED PER CBC TABLE 11B-208.2

PARKING

| | |
|---|---|
| EXISTING PARKING LOT | 194 (INCLUDING 9 ADA) |
| NEW PARKING LOT | 25 (INCLUDING 1 ADA) |

**TOTAL PARKING PROVIDED =219 (INCLUDING 10 ADA)**

ACCESSIBLE STALLS REQ. = 7
**ACCESSIBLE STALLS PROVIDED=10**

## GENERAL NOTES

1. ALL WORK SHALL BE DONE IN ACCORDANCE WITH THE FOLLOWING:
   A. APPLICABLE SECTIONS OF THE STATE OF CALIFORNIA'S DEPARTMENT OF TRANSPORTATION STANDARD SPECIFICATIONS, LATEST EDITION, HEREINAFTER CALLED "CALTRANS";
   B. CALIFORNIA PLUMBING CODE AND CALIFORNIA BUILDING CODE PROVISIONS;
   C. AWWA STANDARD SPECIFICATIONS;
   D. CITY/COUNTY DESIGN STANDARDS WHERE APPLICABLE;
   E. STANDARDS OF THE UNITED STATES DEPARTMENT OF LABOR, OCCUPATIONAL SAFETY AND HEALTH ADMINISTRATION, OFFICE OF STANDARDS AND RULES OF THE STATE DIVISION OF INDUSTRIAL SAFETY;
   F. THESE PLANS AND DETAILS SHOWN HEREON. WHERE CONFLICTS EXIST BETWEEN ANY OF THE ABOVE LISTED SPECIFICATIONS THE MOST STRINGENT SPECIFICATION SHALL PREVAIL.
2. CONTRACTOR SHALL VERIFY LOCATION OF ALL <E> ABOVE GROUND UTILITIES AND PROVIDE FOR THEIR TEMPORARY DISCONNECTION, PROTECTION, REMOVAL AND/ OR STORAGE AS MAY BE REQUIRED DURING CONSTRUCTION. CONTRACTOR SHALL COORDINATE WITH THE COUNTY/DISTRICT TO DETERMINE WHETHER TEMPORARY SERVICES ARE NECESSARY.
3. ALL SPOILS, DEBRIS, AND INCIDENTAL ITEMS SHALL BE HAULED OFF SITE BY CONTRACTOR AND BE DISPOSED OF IN A LAWFUL MANNER AS IT ACCUMULATES.
4. CONTRACTOR SHALL TAKE CARE NOT TO DAMAGE IN ANY WAY, ANY EXISTING ELEMENTS NOT DESIGNATED FOR REMOVAL. SUCH DAMAGE IS THE RESPONSIBILITY OF THE CONTRACTOR AT NO ADDITIONAL COST TO THE COUNTY/DISTRICT.
5. COORDINATE SHUT-OFF OF ALL UTILITIES PRIOR TO ANY DEMOLITION.
6. CONTRACTOR IS TO PROTECT AND KEEP <E> TREES NOT MARKED FOR RELOCATION OR REMOVAL.
7. THE SITE MUST BE CLEANED AT THE END OF EACH BUSINESS DAY.
8. CONTRACTOR TO MAINTAIN A SAFE, SECURE SITE.
9. THIS DRAWING IS TO OUR BEST KNOWLEDGE AND REFLECTS THE <E> SITE CONDITIONS.
10. IT IS THE RESPONSIBILITY OF THE CONTRACTOR TO SECURE ALL PERMITS NECESSARY TO PERFORM THE WORK, INCLUDING BUT NOT LIMITED TO WORK IN THE PUBLIC RIGHT-OF-WAY, TREE REMOVAL, AND UTILITY MODIFICATIONS.
11. ALL KNOWN EXISTING UTILITY LINES ARE SHOWN FOR INFORMATION ONLY. CONTRACTOR SHALL EXERCISE ALL NECESSARY CAUTION TO AVOID DAMAGE TO ANY EXISTING UTILITY LINES OR FACILITIES TO REMAIN IN PLACE. WHETHER OR NOT SUCH LINES OR FACILITIES ARE SHOWN ON THESE PLANS, AND SHALL BEAR FULL RESPONSIBILITY FOR ANY DAMAGE THERETO. CONTRACTOR IS ADVISED TO CONTACT UNDERGROUND SERVICE ALERT (USA) AT (800) 642-2444 OR A PRIVATE UNDERGROUND LOCATER SERVICE (AT CONTRACTOR'S EXPENSE) AND THE AFFECTED UTILITY COMPANY FOR MARKING UNDERGROUND LINES PRIOR TO BEGINNING WORK.
12. TO REDUCE CONSTRUCTION DUST THESE CONTROL MEASURES SHALL BE REQUIRED DURING DEMOLITION/CONSTRUCTION
    - WATER ALL ACTIVE CONSTRUCTION AREAS AT LEAST TWICE DAILY
    - COVER ALL TRUCKS HAULING SOIL, SAND, OR LOOSE MATERIALS OR REQUIRE ALL TRUCKS TO MAINTAIN AT LEAST TWO FEET OF FREEBOARD.
    - SWEEP STREET DAILY ( WITH WATER SWEEPERS) IF VISIBLE SOIL MATERIAL IS CARRIED INTO ADJACENT PUBLIC STREETS.
    - ENCLOSE, COVER, WATER TWICE DAILY OR APPLY NON-TOXIC SOIL BINDERS TO EXPOSED STOCKPILES ( DIRT, SAND, ETC.)

JOB COPY
These plans may not have all the job or permit changes.
CITY OF MORGAN HILL
BUILDING DIVISION

## SYMBOL LEGEND

- PROPERTY LINE
- (N) ADDITION
- <E> BLDG
- ACCESSIBLE PATH OF TRAVEL
- BATHROOMS LOCATED WITHIN BLDG


WESTON MILES
ARCHITECTS
17500 Depot Street, Suite #200
Morgan Hill, CA 95037
T •408 • 779 • 6686
• Architecture • Landscape •


REGISTERED ARCHITECT
WESTON L. MILES
STATE OF CALIFORNIA
NOT VALID WITHOUT SIGNATURE

REVISIONS
1 01/30/2019 PLAN CHECK #1
2 03/27/2019 PLAN CHECK #2
3

# OVERALL SITE PLAN

## CENTENNIAL RECREATION CENTER EXPANSION PROJECT

CITY OF MORGAN HILL
171 W EDMUNDSON AVE, MORGAN HILL, CA 95037


These drawings are instruments of service and are the property of WESTON MILES ARCHITECTS, INC. All designs, drawings, specifications, and other data prepared for the specified project and shall not be used otherwise without the expressed written permission of WESTON MILES ARCHITECTS, INC.


Written dimensions on these drawings shall have precedence over scaled dimensions. Contractors shall verify and be responsible for all dimensions and conditions on the job and this office shall be notified of any variations from the dimensions and conditions shown by these drawings. Shop details shall be submitted to this office for approval before proceeding with fabrication.


© Copyright 2018


DATE: 11/9/2018
JOB NO: 18001

A1.0

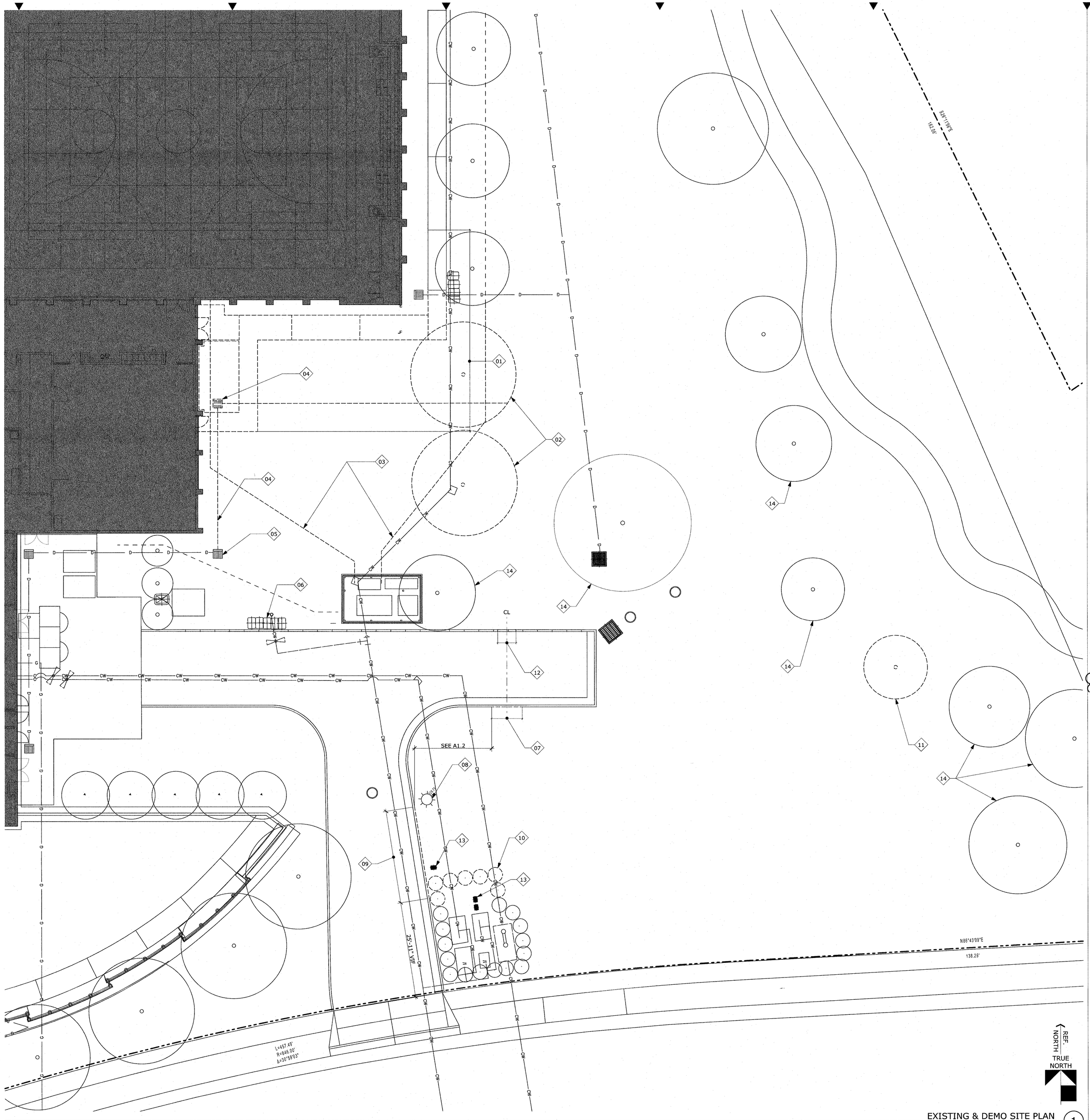


EXISTING & DEMO SITE PLAN
SCALE: 3/32" = 1'-0"
1

## GENERAL NOTES

1. CONTRACTOR SHALL VERIFY LOCATION OF ALL <E> ABOVE GROUND UTILITIES AND PROVIDE FOR THEIR TEMPORARY DISCONNECTION, PROTECTION, REMOVAL AND/ OR STORAGE AS MAY BE REQUIRED DURING CONSTRUCTION. CONTRACTOR SHALL COORDINATE WITH THE COUNTY/DISTRICT TO DETERMINE WHETHER TEMPORARY SERVICES ARE NECESSARY.
2. ALL SPOILS, DEBRIS, AND INCIDENTAL ITEMS SHALL BE HAULED OFF SITE BY CONTRACTOR AND BE DISPOSED OF IN A LAWFUL MANNER AS IT ACCUMULATES.
3. CONTRACTOR SHALL TAKE CARE NOT TO DAMAGE IN ANY WAY, ANY EXISTING ELEMENTS NOT DESIGNATED FOR REMOVAL. SUCH DAMAGE IS THE RESPONSIBILITY OF THE CONTRACTOR AT NO ADDITIONAL COST TO THE COUNTY/DISTRICT.
4. COORDINATE SHUT-OFF OF ALL UTILITIES PRIOR TO ANY DEMOLITION.
5. CONTRACTOR IS TO PROTECT AND KEEP <E> TREES.
6. THE <E> BUILDINGS ARE TO REMAIN IN USE DURING CONSTRUCTION.
7. THE SITE MUST BE CLEANED AT THE END OF EACH BUSINESS DAY.
8. CONTRACTOR TO MAINTAIN A SAFE, SECURE SITE.
9. THIS DRAWING IS TO OUR BEST KNOWLEDGE AND REFLECTS THE <E> SITE CONDITIONS.
10. FOR ADDITIONAL SITE DEMOLITION, SEE CIVIL PLANS

## DEMOLITION KEY NOTES ##

- 01 <E> SIDEWALK TO BE DEMOLISHED
- 02 <E> TREES & ROOT BALLS TO BE REMOVED
- 03 <E> SOLAR TO BE RELOCATED - SEE ELECT. DRAWINGS
- 04 SEE CIVIL DRAWINGS
- 05 LIFT OR LOWER S.D. AS REQUIRED TO HAVE LID FLUSH WITH (N) SIDEWALK
- 06 EXISTING IRRIGATION BOXES TO BE PROTECTED DURING CONSTRUCTION

## DEMOLITION KEY NOTES-ADD ALT ##

- 07 8'-0" PORTION OF <E> CURB TO BE REMOVED FOR (N) ADA CROSSING, SEE A1.2
- 08 <E> SITE LIGHT POLE TO REMAIN & PROTECTED DURING CONSTRUCTION
- 09 PORTION OF <E> CURB TO REMOVED FOR (N) 25'-0" DRIVEWAY
- 10 <E> SHRUBS TO BE REMOVED AS REQUIRED FOR (N) PAVING AND CURB
- 11 <E> TREES & ROOT BALLS TO BE REMOVED
- 12 5'-0" PORTION OF <E> CURB TO BE REMOVED FOR (N) ADA CROSSING, SEE A1.2
- 13 RELOCATE IRRIGATION AS REQUIRED. SEE CIVIL DURING CONSTRUCTION, REDIRECT LINES SO EXISTING PLANTS AND TREES TO REMAIN HAVE PROPER IRRIGATION
- 14 EXISTING TREES TO BE PROTECTED DURING DEMO (1)

JOB COPY
These plans must be kept on the job at all times.
CITY OF MORGAN HILL
BUILDING DIVISION

## SYMBOL LEGEND

- PROPERTY LINE
- ITEMS TO BE DEMOLISHED

WESTON MILES
ARCHITECTS
17500 Depot Street, Suite #200
Morgan Hill, CA 95037
1 • 408 • 779 • 6686
• Architecture • Landscape •

LICENSED ARCHITECT
WESTON E. MILES
STATE OF CALIFORNIA
NOT VALID WITHOUT SIGNATURE

REVISIONS
1 01/30/2019 PLAN CHECK #1
2
3

# EXISTING & DEMO SITE PLAN

## CENTENNIAL RECREATION CENTER EXPANSION PROJECT

CITY OF MORGAN HILL
171 W EDMUNDSON AVE, MORGAN HILL, CA 95037

These drawings are instruments of service and are the property of WESTON MILES ARCHITECTS, INC. All designs and other information on the drawings are for use on the specified project only and are not to be used without the expressed written permission of WESTON MILES ARCHITECTS, INC.

Written dimensions on these drawings shall have precedence over scaled dimensions. Contractors shall verify and be responsible for all dimensions and conditions on the job and this office shall be notified of any variations from the dimensions and conditions shown by these drawings. Shop details shall be submitted to this office for approval before proceeding with fabrication.

© Copyright 2018

DATE: 11/9/2018

JOB NO: 18001

A1.1

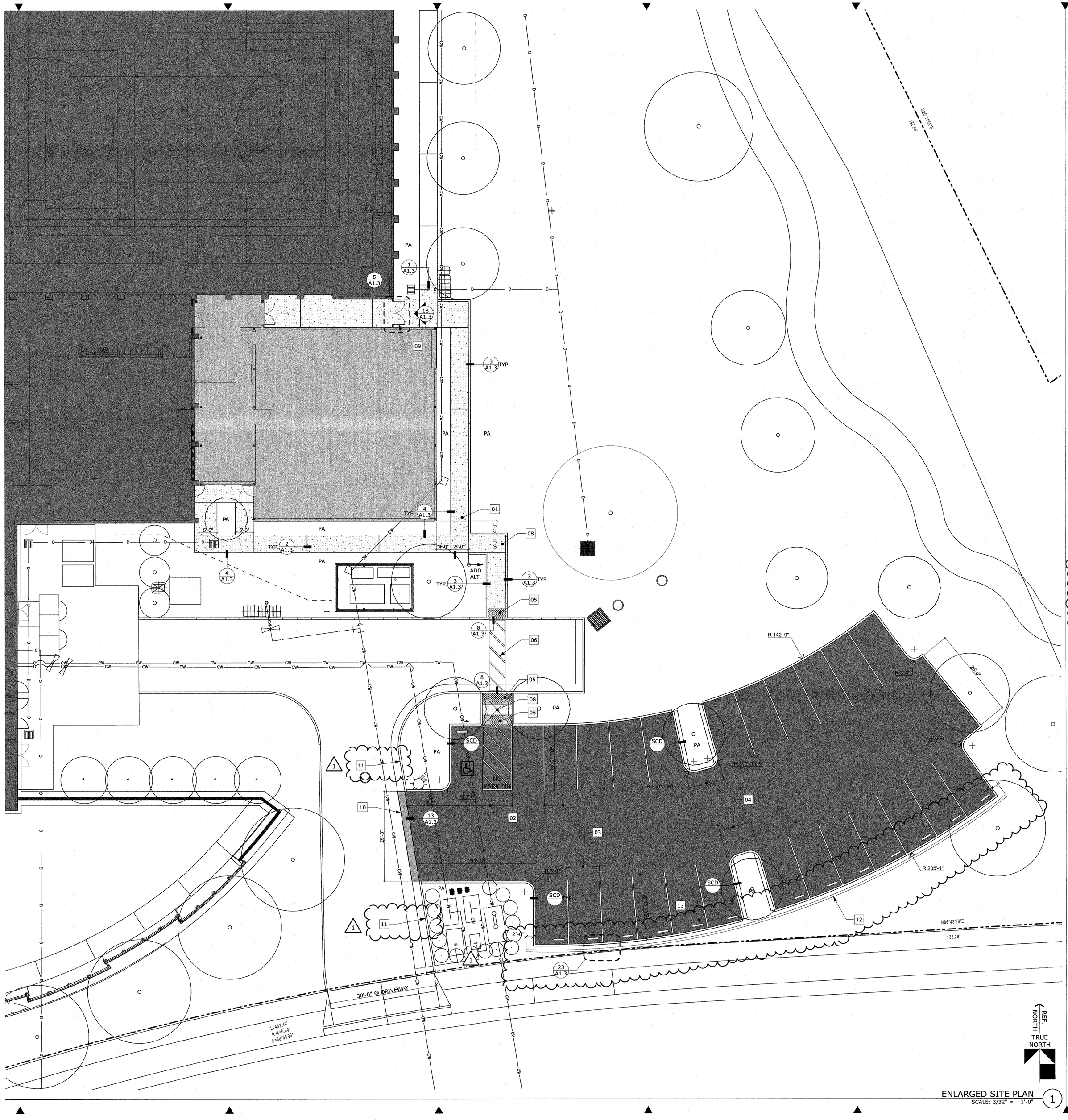


ENLARGED SITE PLAN (1)
SCALE: 3/32" = 1'-0"

## GENERAL NOTES

SCD = SEE CIVIL DRAWINGS

## KEY NOTES

##

01 4" CONC SLAB W/ #4 @ 18" O/C E/W

## KEY NOTES - ADD ALT

##

02 ADA PARKING - SEE DETAIL 6/A1.3, SIM.

03 9'-0" TYP. @ NARROWEST POINT

04 9'-0" WIDE PLANTER W/ 6" CURB

05 3'-0" DEEP TRUNCATED DOMES WIDTH OF SIDEWALK- SEE DETAIL 7/A1.3

06 4" WIDE STRIPES @ 36" MAX ON CENTER PAINTED A COLOR CONTRASTING W/ THE PARKING SURFACE, PREFERABLY WHITE

07 4" WIDE STRIPES PAINTED WHITE

08 4" CONC SLAB W/ #4 @ 18" O/C E/W

09 GATE WITH PANIC HARDWARE

10 NEW GUTTER, SEE CIVIL

11 PAINT EXISTING CURB RED, NO PARKING

12 (N) 3' HIGH FENCE, SEE DETAIL 23/A1.3 AND 24/A1.3

13 (N) 3'-0" WHEEL STOPS

14 4" WIDE WHITE STRIPE, SEE SPECS

1

JOB COPY
These plans must be kept on the job at all times.
CITY OF MORGAN HILL
BUILDING DIVISION

## SYMBOL LEGEND

PROPERTY LINE

(N) ASPHALT - SEE CIVIL DRAWINGS

(N) SIDEWALK

PA PLANTING, SEE LANDSCAPE PLANS


WESTON MILES
ARCHITECTS
17500 Depot Street, Suite #200
Morgan Hill, CA 95037
1 • 408 • 779 • 6686
• Architecture • Landscape •


WESTON MILES ARCHITECTS
ROBERT E. WESTON
C-23
EXPIRES 12-31-19
STATE OF CALIFORNIA
NOT VALID WITHOUT SIGNATURE

REVISIONS
1 01/30/2019 PLAN CHECK #1
2
3

# ENLARGED SITE PLAN

## CENTENNIAL RECREATION CENTER EXPANSION PROJECT

CITY OF MORGAN HILL
171 W EDMUNDSON AVE, MORGAN HILL, CA 95037


These drawings are instruments of service and are the property of WESTON MILES ARCHITECTS, INC. The details and other information on the drawings are for use on the specified project and shall not be used otherwise without the written consent and permission of WESTON MILES ARCHITECTS, INC.

Written dimensions on these drawings shall have precedence over scaled dimensions. Contractors shall verify and be responsible for all dimensions and conditions on the job and this office shall be notified of any variations from the dimensions and conditions shown by these drawings. Shop drawings must be submitted to this office for approval before processing with fabrication.

© Copyrighted 2018


DATE: 11/9/2018

JOB NO: 18001

A1.2

# SITE DETAILS

CENTENNIAL RECREATION CENTER EXPANSION PROJECT

CITY OF MORGAN HILL
171 W. EDMUNDSON AVE, MORGAN HILL, CA 95037

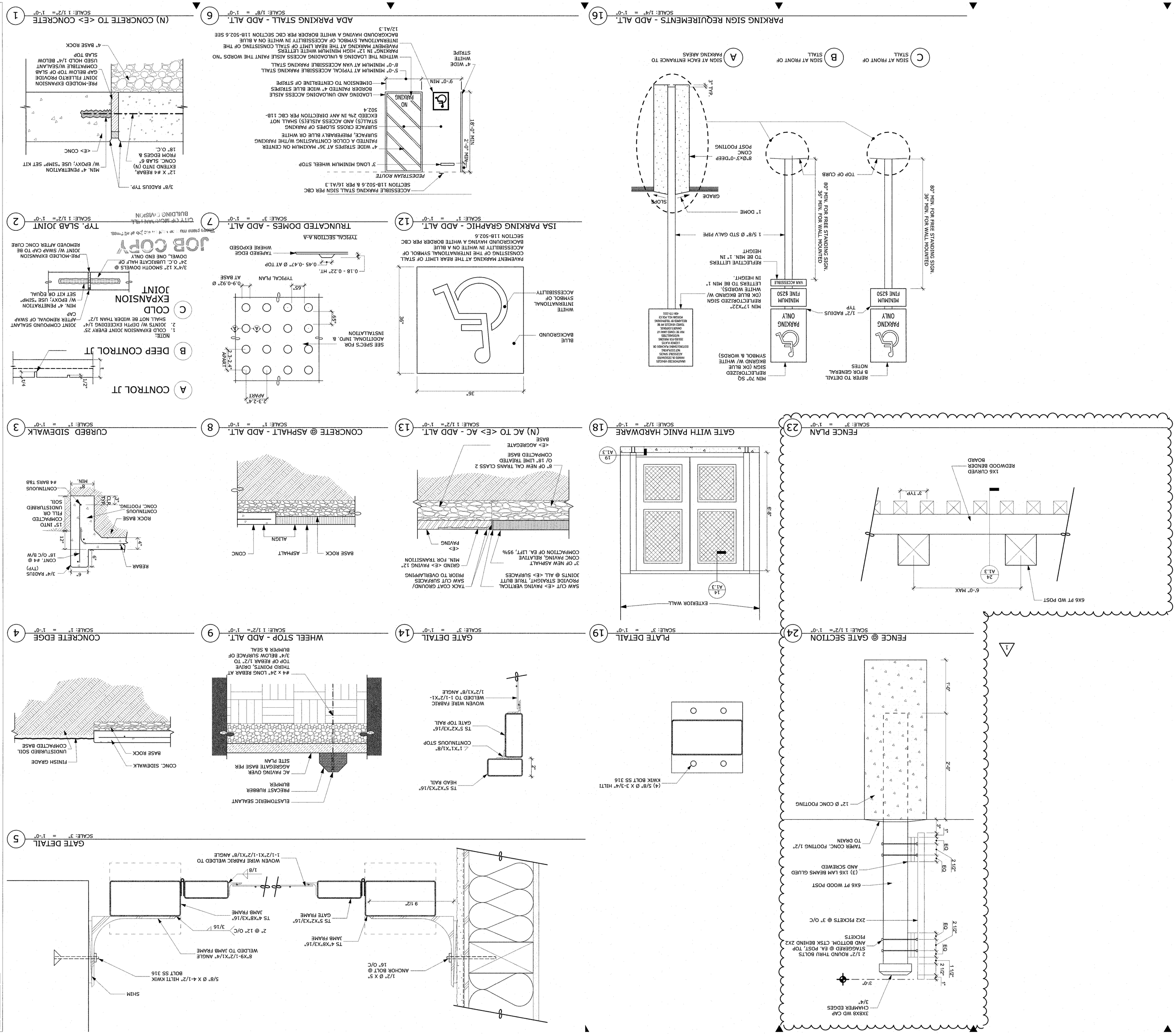


© Copyright 2018

| | |
|---|---|
| DATE: | 11/9/2018 |
| JOB NO: | 18001 |

# A1.3

WESTON MILES
ARCHITECTS
17500 Depot Street, Suite #200
Morgan Hill, CA 95037
T 408 • 779 • 6686
• Architecture • Landscape •

NOT VALID WITHOUT SIGNATURE

| REVISIONS | |
|---|---|
| 1 | 01/30/2019 PLAN CHECK #1 |
| 2 | |
| 3 | |

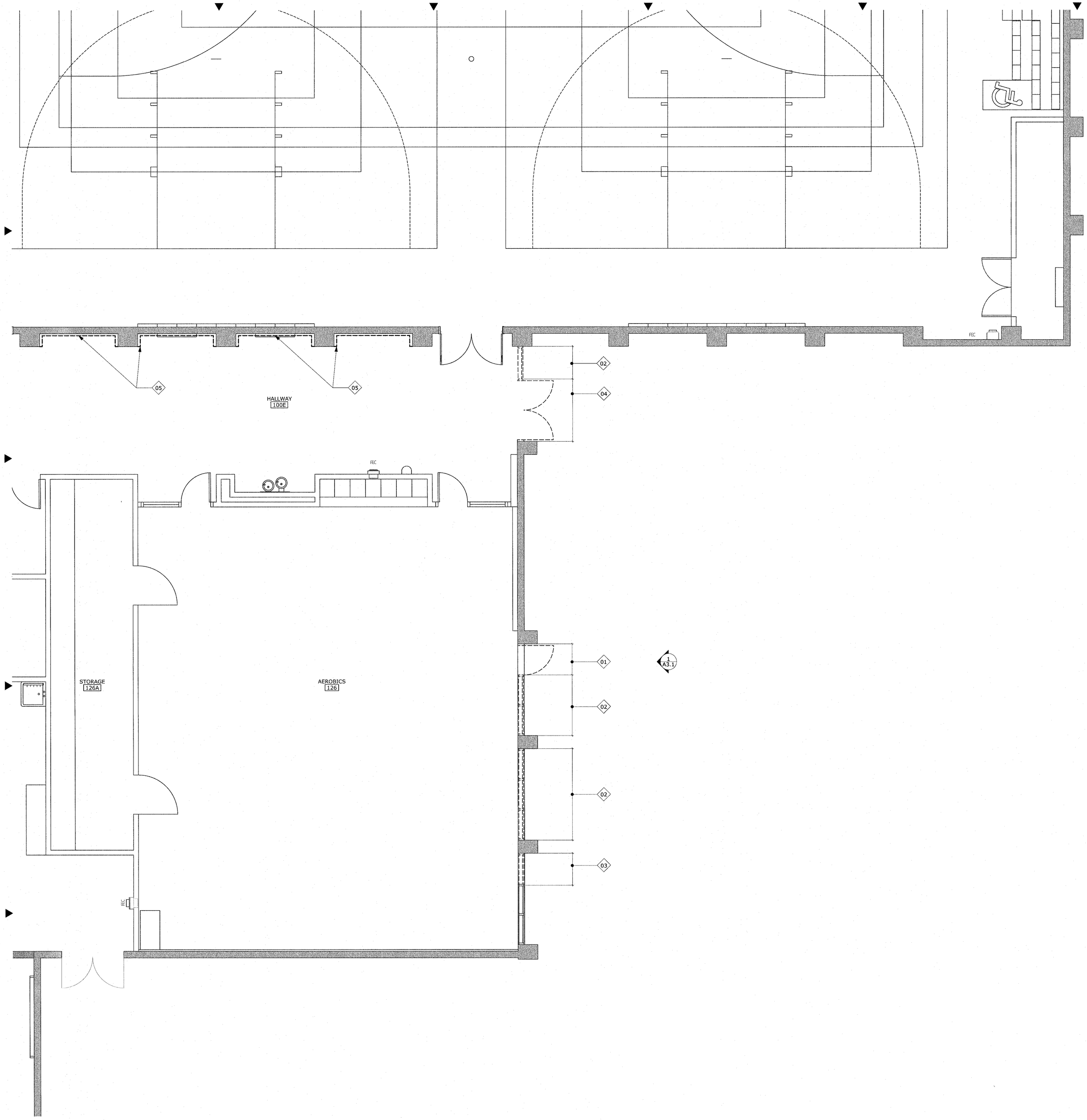


EXISTING & DEMO FLOOR PLAN
SCALE: 1/4" = 1'-0"
1

REF. NORTH
TRUE NORTH

## GENERAL NOTES

1. CONTRACTOR SHALL VERIFY LOCATION AND DEPTH OF ALL <E> UTILITIES PRIOR TO ANY EXCAVATION FOR DEMOLITION.
2. CONTRACTOR SHALL VERIFY LOCATION OF ALL <E> ABOVE GROUND UTILITIES AND PROVIDE FOR THEIR TEMPORARY DISCONNECTION, PROTECTION, REMOVAL AND/OR STORAGE AS MAY BE REQUIRED DURING CONSTRUCTION. CONTRACTOR SHALL COORDINATE WITH THE OWNER TO DETERMINE WHETHER TEMPORARY SERVICES ARE NECESSARY.
3. ALL SPOILS, DEBRIS, AND INCIDENTAL ITEMS REMOVED FROM THE DEMOLITION WORK SHALL BE HAULED OFF SITE BY CONTRACTOR AND BE DISPOSED OF IN A LAWFUL MANNER AS IT ACCUMULATES. EXCAVATED, CLEAN FILL MAY BE USED IN CONSTRUCTION IF APPROVED BY THE OWNER'S REPRESENTATIVE.
4. CONTRACTOR SHALL TAKE CARE NOT TO DAMAGE IN ANY WAY, ANY EXISTING ELEMENTS NOT DESIGNATED FOR REMOVAL. SUCH DAMAGE IS THE RESPONSIBILITY OF THE CONTRACTOR AT NO ADDITIONAL COST TO THE OWNER.
5. SHUT OFF ALL WATER, GAS, & ELECTRIC AT STREET PRIOR TO ANY DEMOLITION.
6. CONTRACTOR IS TO PROTECT AND KEEP <E> TREES, U.N.O.
7. THE SITE MUST BE CLEANED AT THE END OF EACH BUSINESS DAY.
8. CONTRACTOR TO MAINTAIN A SAFE, SECURE SITE WHILE UNATTENDED OR PERFORMING ANY OPERATIONS OF THIS PROJECT. INCLUDING, BUT NOT LIMITED TO TEMPORARY SHORING TO PROJECT PERSONNEL, STRUCTURES, ONGOING ACTIVITIES AND/OR OPERATIONS AND UTILITIES REMAINING IN TACT.
9. THIS DRAWING IS TO OUR BEST KNOWLEDGE, AND REFLECTS THE <E> SITE CONDITIONS,
10. FOR SITE DEMOLITION, SEE 1/A1.1.
11. CONTRACTOR TO REFER TO SCA HAZARDOUS MATERIAL SURVEY
12. THROUGHOUT CONSTRUCTION THE CONTRACTOR SHALL MAINTAIN AND MAKE AVAILABLE A LIST OF ITEMS FOR RELOCATION NOTING WHERE EACH ITEM IS REINSTALLED. BY THE END OF CONSTRUCTION, THE CONTRACTOR SHALL REVIEW THE LIST WITH THE ARCHITECT AND EITHER STORE OR DISPOSE OF EACH ITEM REMAINING UNINSTALLED AS DIRECTED.

## DEMOLITION KEY NOTES

| # | |
|---|---|
| 01 | <E> STOREFRONT DOOR AND THRESHOLD TO BE REMOVED AND RELOCATED, SEE DOOR SCHEDULE ON A6.1. <E> MASONRY, STUCCO WALL AND FLOOR TO BE PROTECTED DURING DEMO |
| 02 | <E> STOREFRONT WINDOW TO BE REMOVED & DISCARDED. <E> MASONRY WALL AND <E> FLOORING TO BE PROTECTED DURING DEMO. |
| 03 | REMOVE THIS WINDOW PANEL & PREP. FOR RELOCATED DOOR. DO ALL WORK TO PROVIDE LIKE NEW CONDITION. ALL HARDWARE TO REMAIN. <E> MASONRY WALL AND FLOOR TO BE PROTECTED DURING DEMO, SEE DOOR SCHEDULE ON A6.1 |
| 04 | <E> STOREFRONT DOORS, HARDWARE, THRESHOLD AND TRANSOM TO BE RELOCATED- SEE DOOR SCHEDULE FOR NEW LOCATION OF DOOR 100A. <E> MASONRY WALL AND STUCCO TO BE PROTECTED DURING DEMO |
| 05 | REMOVE <E> BENCH SUPPORTS WHERE BENCH HAS BEEN REMOVED AND PATCH WALL ACCORDINGLY |

JOB COPY
These plans must be kept at the job at all times.
CITY OF MORGAN HILL
BUILDING DIVISION

## SYMBOL LEGEND

- - - - - ITEMS TO BE DEMOLISHED

WESTON MILES
ARCHITECTS
17500 Depot Street, Suite #200
Morgan Hill, CA 95037
1 • 408 • 779 • 6686
• Architecture • Landscape •

REGISTERED ARCHITECT
SCOTT R. WESTON
C-18,745
STATE OF CALIFORNIA
NOT VALID WITHOUT SIGNATURE

REVISIONS
1 01/30/2019 PLAN CHECK #1
2
3

# EXISTING & DEMO FLOOR PLAN

CENTENNIAL RECREATION CENTER EXPANSION PROJECT

CITY OF MORGAN HILL
171 W EDMUNDSON AVE, MORGAN HILL, CA 95037

These drawings are instruments of service and are the property of WESTON MILES ARCHITECTS, INC. All designs and plans indicated or represented by these drawings are for specified project and shall not be used otherwise without the expressed written permission of WESTON MILES ARCHITECTS, INC.

Written dimensions on these drawings shall have precedence over scale dimensions. Contractor shall verify and be responsible for all dimensions and conditions on the job and this office shall be notified of any variations from the dimensions and conditions shown on these drawings. Shop drawings shall be submitted to this office for approval before proceeding with fabrication.

© Copyrighted 2018

DATE: 11/9/2018

JOB NO: 18001

A2.0

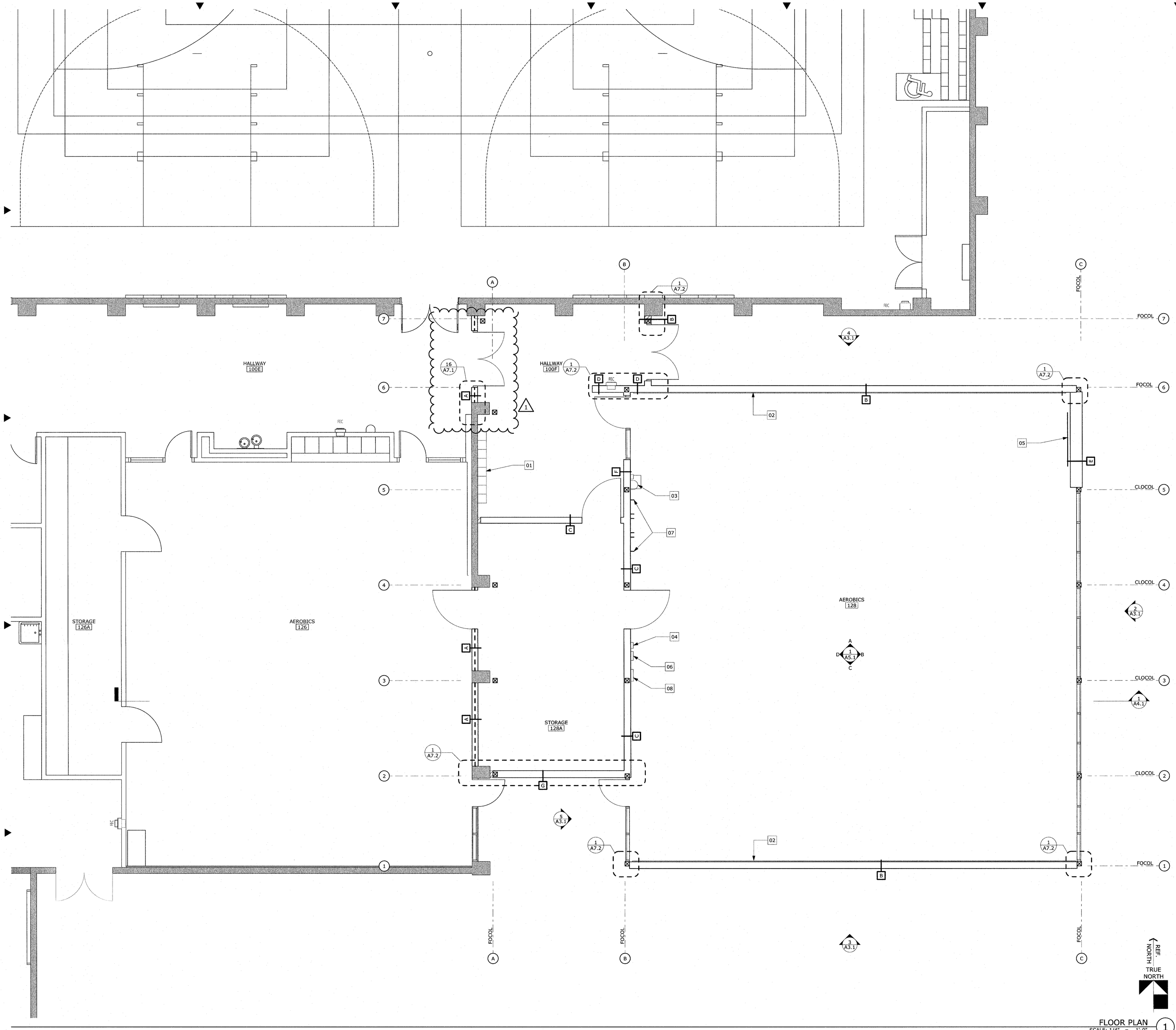


FLOOR PLAN
SCALE: 1/4" = 1'-0"

## GENERAL NOTES

1. NONE

## KEY NOTES

| ## | |
|---|---|
| 01 | (N) HEAVY DUTY ALL WELDED 3 TIER LOCKERS, 12"W X 12"D X 72"H W/ 6" BASE. LOWER TWO LOCKERS TO BE ADA COMPLIANT W/ DIGILOCKS @ 48" MAX AFF - SEE DETAIL 11 & 16/A9.1 FOR MOUNTING |
| 02 | MIRRORS, SEE INTERIOR ELEVATIONS |
| 03 | PAPER TOWEL DISPENSER, SEE INTERIOR ELEVATIONS |
| 04 | HAND SANITIZER DISPENSER, SEE INTERIOR ELEVATIONS |
| 05 | BULLETIN BOARD, SEE INTERIOR ELEVATIONS |
| 06 | FIRST AID KIT, SEE INTERIOR ELEVATIONS |
| 07 | MAT HOOKS, SEE INTERIOR ELEVATIONS |
| 08 | SOUNDEAR SENSOR, SEE INTERIOR ELEVATIONS |

## ACCESSIBILITY NOTES

1. ALL ACCESSIBLE LOCKERS TO BE IDENTIFIED WITH ISA SYMBOL
2. ALL ACCESSIBLE LOCKERS TO HAVE LOCKING DEVICES AND HOOKS MOUTNED AT 48" MAX ABOVE FINISHED FLOOR
3. ALL ACCESSIBLE LOCKER SHELVING TO BE MOUNTED BETWEEN 15" AND 48" ABOVE FINISHED FLOOR
4. PER CBC SECTION 11B-222.1, AT LEAST 5%, BUT NO FEWER THAN ONE OF EACH TYPE OF USE IN EACH CLUSTER PROVIDED SHALL COMPLY WITH SECTION 11B-803

| TOTAL # OF LOCKERS | REQ'D # OF ADA LOCKERS | TOTAL # OF ADA LOCKERS |
|---|---|---|
| 24 | 2 | 2 |

JOB COPY
These plans must be kept on the job at all times.
CITY OF MORGAN HILL
BUILDING DIVISION

## SYMBOL LEGEND

4" SEISMIC JOINT

2 HOUR RATED WALL

WESTON MILES
ARCHITECTS
17500 Depot Street, Suite #200
Morgan Hill, CA 95037
1 • 408 • 779 • 6686
• Architecture • Landscape •

NOT VALID WITHOUT SIGNATURE

REVISIONS
1 01/30/2019 PLAN CHECK #1
2
3

# FLOOR PLAN

## CENTENNIAL RECREATION CENTER EXPANSION PROJECT

CITY OF MORGAN HILL
171 W EDMUNDSON AVE, MORGAN HILL, CA 95037

These drawings are instruments of service and are the property of WESTON MILES ARCHITECTS, INC. All designs and plans indicated or represented by these drawings are for specified project and shall not be used elsewhere without the expressed written permission of WESTON MILES ARCHITECTS, INC.

Written dimensions on these drawings shall have precedence over scale dimensions. Contractors shall verify and be responsible for all dimensions and conditions on the job and this office shall be notified of any variance from the dimensions and conditions shown by these drawings. Shop details shall be submitted to this office for approval before processing with fabrication.

© Copyrighted 2018

DATE: 11/9/2018

JOB NO: 18001

A2.1

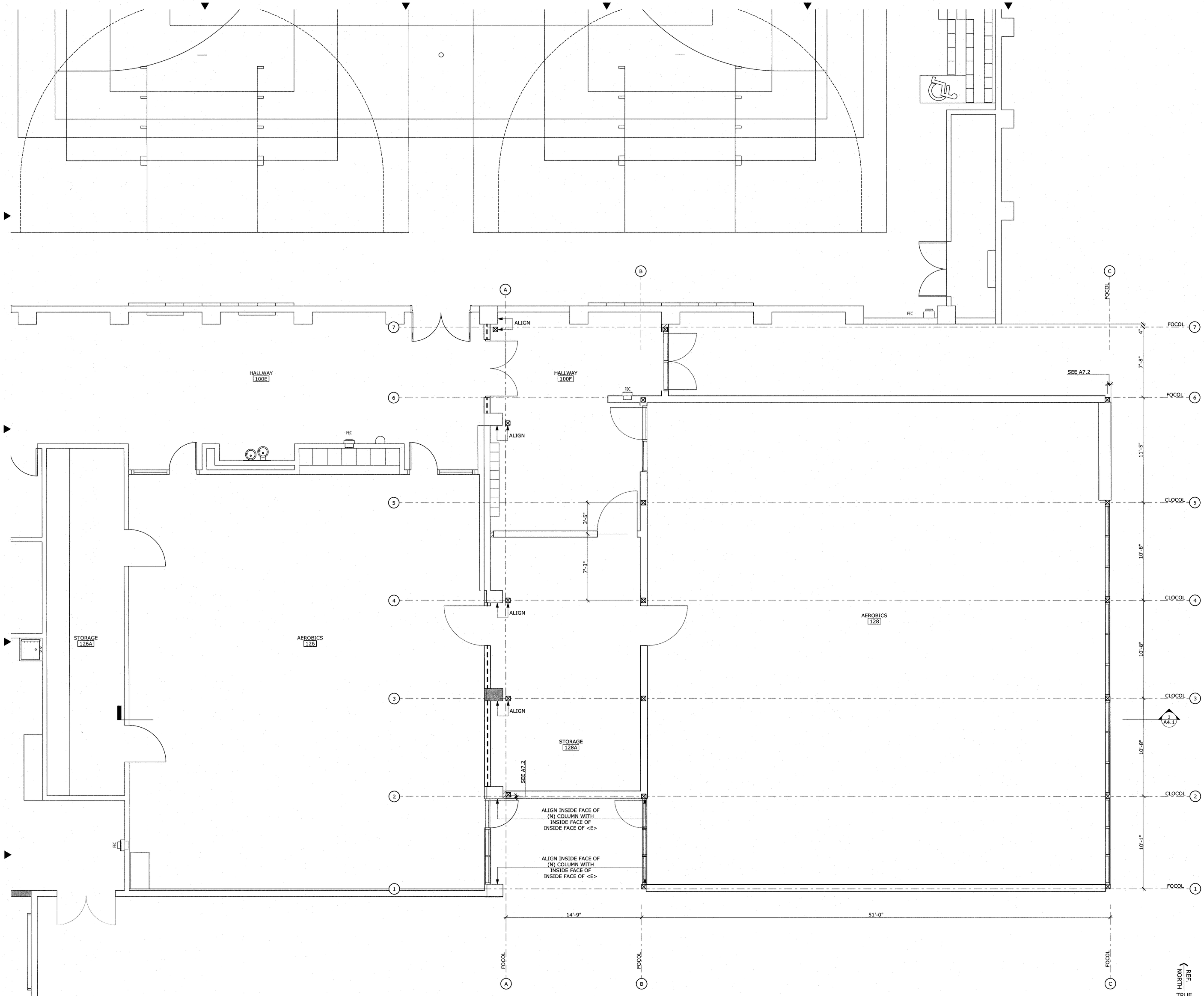


DIMENSION PLAN
SCALE: 1/4" = 1'-0"
1

## GENERAL NOTES

1. NONE

## KEY NOTES

| ## |
|---|

01 NONE

JOB COPY
These plans must be kept on the job at all times.
CITY OF MORGAN HILL
BUILDING DIVISION

## SYMBOL LEGEND


WESTON MILES
ARCHITECTS
17500 Depot Street, Suite #200
Morgan Hill, CA 95037
1 •408 • 779 • 6686
• Architecture • Landscape •


NOT VALID WITHOUT SIGNATURE

REVISIONS
1 01/30/2019 PLAN CHECK #1
2
3

# DIMENSION PLAN

## CENTENNIAL RECREATION CENTER EXPANSION PROJECT

CITY OF MORGAN HILL
171 W EDMUNDSON AVE, MORGAN HILL, CA 95037


These drawings are instruments of service and are the property of WESTON MILES ARCHITECTS, INC. All designs and ideas and other information on the drawings are for use on the specified project and shall not be used otherwise without the written consent and permission of WESTON MILES ARCHITECTS, INC.


Written dimensions on these drawings shall have precedence over scaled dimensions. Contractors shall verify and be responsible for all dimensions and conditions on the job and this office shall be notified of any variations from the dimensions and conditions shown by these drawings. Shop drawings must be submitted to this office for approval before proceeding with fabrication.


© Copyrighted 2018


DATE: 11/9/2018

JOB NO: 18001

A2.2

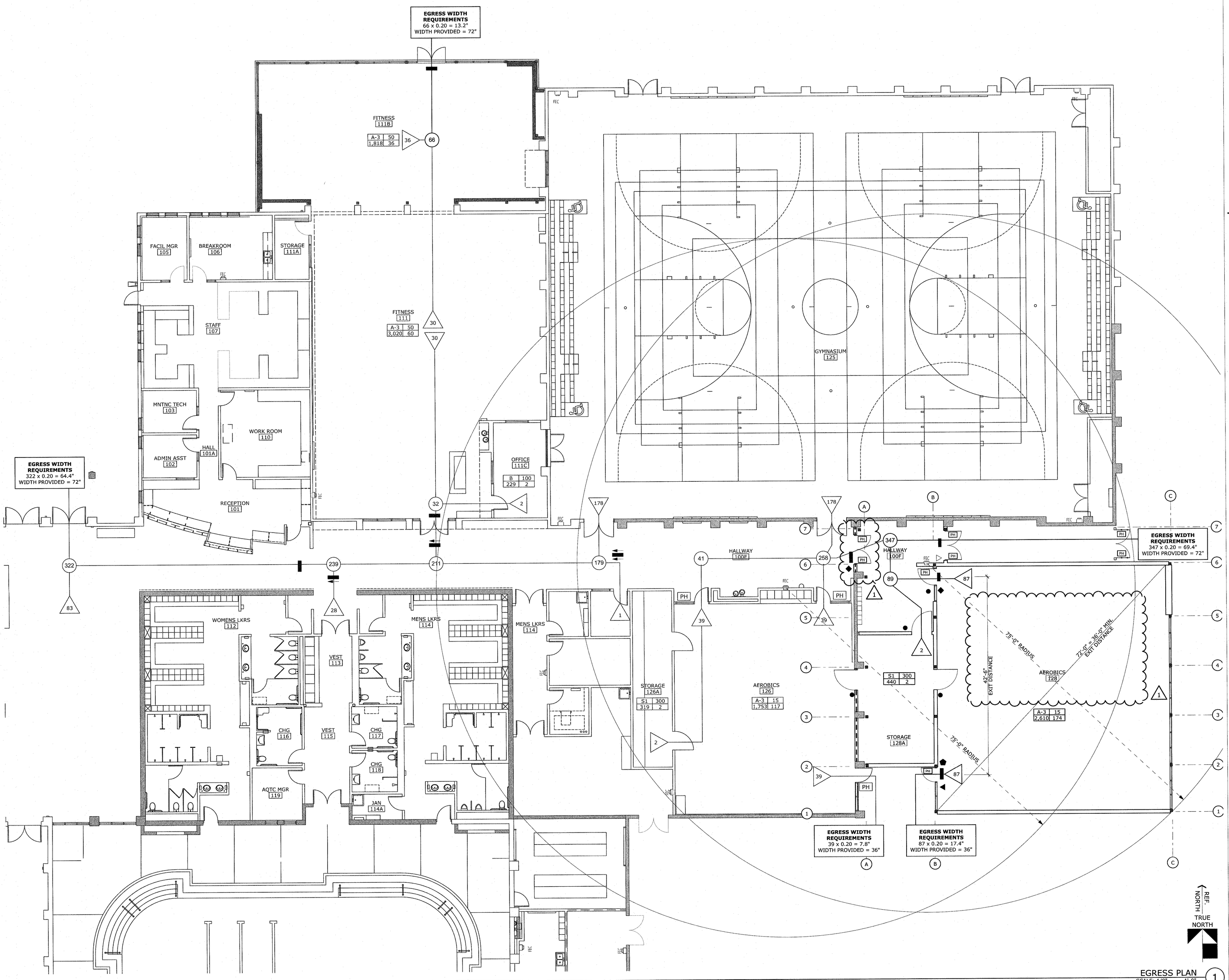


EGRESS PLAN 1
SCALE: 1/8" = 1'-0"

## GENERAL NOTES

1. INSTALL FIRE WALL BARRIER SIGN PER CBC SECTION 703.6 LOCATED IN ACCESSIBLE CONCEALED FLOOR, FLOOR-CEILING OR ATTIC SPACES. SIGN TO BE REPEATED AT INTERVALS NOT EXCEEDING 30 FEET MEASURED HORIZONTALLY ALONG THE WALL. INCLUDE LETTERING NOT LESS THAN 0.5 INCH IN HEIGHT, INCORPORATING THIS WORDING: "FIRE BARRIER-PROTECT ALL OPENINGS."

## KEY NOTES

##

01 NONE

## SIGNAGE LEGEND

- ROOM IDENTIFICATION - SEE DETAIL 4A/A9.1
- EXIT SIGN - SEE DETAIL 4D/A9.1
- EMERGENCY EXIT SIGN - SEE DETAIL 4C/A9.1
- EXIT ROUTE SIGN - SEE DETAIL 4E/A9.1
- ILLUMINATED EXIT SIGN WITH DIRECTIONAL ARROW WHEN NECESSARY -SEE ELECTRICAL DRAWINGS
- MAXIMUM OCCUPANT LOAD SIGN - SEE DETAIL 4B/A9.1

FOR ROOMS OF 50 OR MORE. THE SIGN SHALL READ "MAXIMUM OCCUPANT NOT TO EXCEED # PERSONS"

# NUMBER OF PERSONS LISTED ON PLAN

JOB COPY
These plans must be kept at the job at all times.
CITY OF MORGAN HILL
BUILDING DIVISION

## SYMBOL LEGEND

FEC — FIRE EXTINGUISHER CABINET - FOR FIRE EXTINGUISHER CABINET SEE DETAIL 18/A9.1 AND SPEC

ALL PORTIONS OF THE BUILDING SHALL BE WITHIN 75 FEET OF A FIRE EXTINGUISHER. THE MINIMUM SIZE OF THE EXTINGUISHER SHALL BE 2-A:10-BC. SEE DETAIL 18/A9.1.

## — ROOM OCCUPANCY LOAD

## — COMBINED OCCUPANCY LOAD FROM ADJOINING ROOMS

PH — DOORS W/PANIC HARDWARE

OCCUPANCY TYPE
OCCUPANCY FACTOR
OCCUPANCY LOAD
ROOM SQUARE FEET

PER SECTION 508.2.3, EXCEPTION 2.2, IF THE "B" OCCUPANCY SQ. FOOTAGE IS GREATER THAN 10% OF THE TOTAL SQ. FOOTAGE, THEN A 1-HR SEPARATION WALL IS REQUIRED BETWEEN THE TWO OCCUPANCIES.

WESTON MILES
ARCHITECTS
17500 Depot Street, Suite #200
Morgan Hill, CA 95037
T •408 • 779 • 6686
• Architecture • Landscape •

NOT VALID WITHOUT SIGNATURE

REVISIONS
1 01/30/2019 PLAN CHECK #1
2
3

# EGRESS PLAN

CENTENNIAL RECREATION CENTER EXPANSION PROJECT

CITY OF MORGAN HILL
171 W EDMUNDSON AVE, MORGAN HILL, CA 95037

These drawings are instruments of service and are the property of WESTON MILES ARCHITECTS, INC. All designs and other information on the drawings are for use on the specified project and shall not be used otherwise without the written consent of the permission of WESTON MILES ARCHITECTS, INC.

Written dimensions on these drawings shall have precedence over scaled dimensions. Contractors shall verify and be responsible for all dimensions and conditions on the job and report any errors, omissions or conflicts before proceeding with the work shown on these drawings. Shop details shall be submitted to this office for approval before proceeding with fabrication.

© Copyrighted 2018

DATE: 11/9/2018

JOB NO: 18001

A2.3

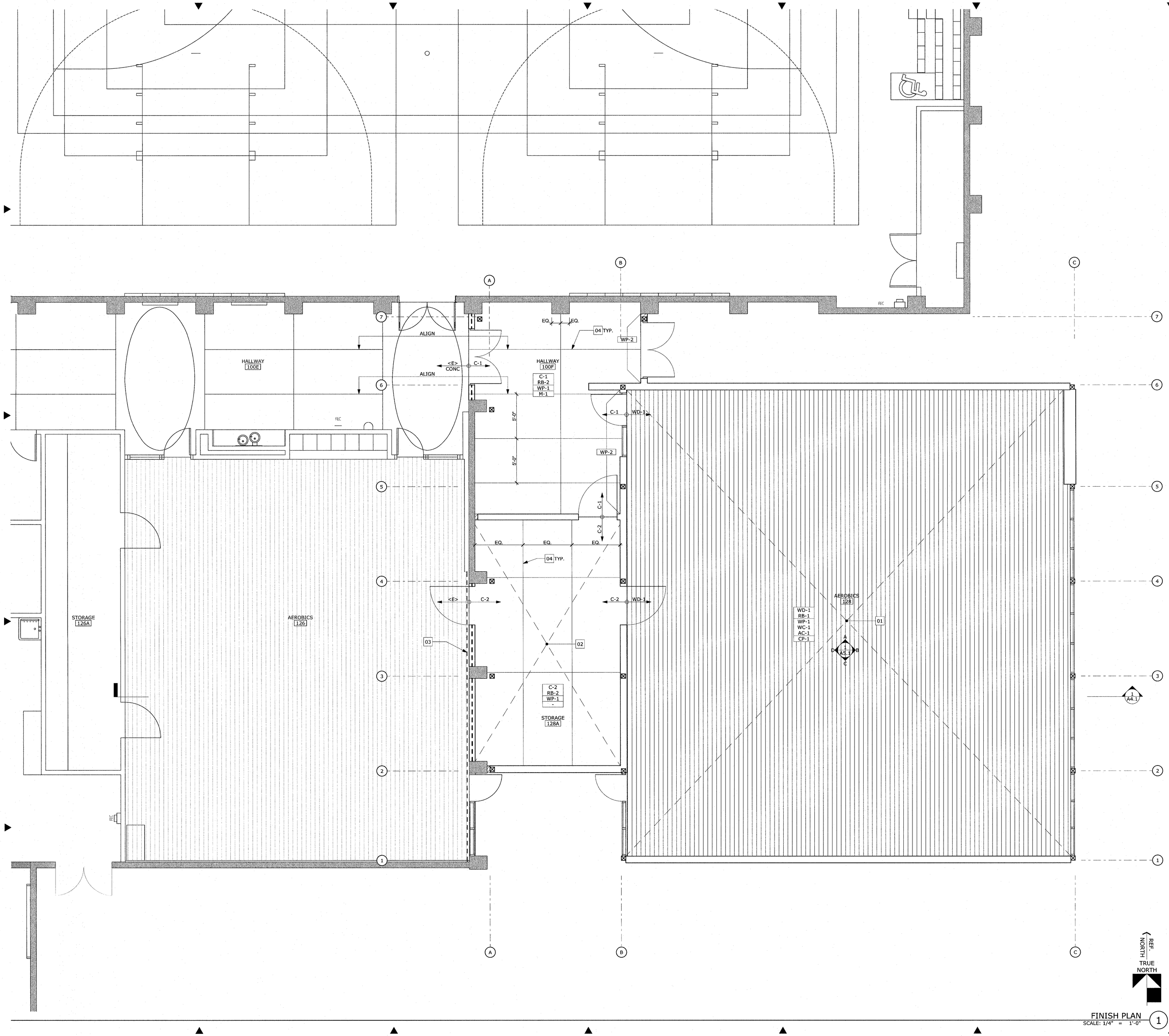


FINISH PLAN
SCALE: 1/4" = 1'-0"

## GENERAL NOTES

1. SEE INTERIOR ELEVATIONS ON A5.1 & A5.2 FOR MORE INFORMATION ABOUT FINISHES
2. SEE DOOR AND WINDOW SCHEDULE FOR TRANSITION OF DISSIMILAR FLOOR

## KEY NOTES

##

01 PROTECTIVE WALL COVERING UP TO 8'-0"

02 WALL FINISH: 1/2" TONGUE AND GROOVE PLYWOOD, PAINTED

03 REPLACE VENTED COVE BASE AS REQUIRED DUE TO DEMOLITION. REPLACE WITH RB-1 INSTALLED BY FLOORING MANUFACTURER.

04 CONCRETE EXPANSION JOINT, TYP. SEE 2/A1.3

## ROOM FINISHES SCHEDULE

**FLOOR**

**CONC**
C-1 POLISHED CONCRETE, SEE SPECS

C-2 UNFINISHED CONCRETE

**WOOD SPORTS FLOORING**
CONNOR SPORTS
WD-1 SEE SPECS

**BASE**

**VENTED COVE RUBBER BASE**
CONNOR SPORTS
RB-1 SEE SPECS

**RUBBER BASE**
BURKE 2-1/2"
RB-2 BLACK, SEE SPECS

**WALLS**

**PAINT**
WP-1 <E> FIELD COLOR, EGGSHELL, SEE SPECS
WP-2 <E> GREEN ACCENT, EGGSHELL, SEE SPECS

**PROTECTIVE WALL COVERING**
KOROGARD
WC-1 SEE SPECS & INTERIOR ELEVATIONS

**ACOUSTIC WALL PANELS**
ARMSTRONG
AC-1 PAINTED, SEE SPECS & INTERIOR ELEVATIONS
AC-2 PAINTED, SEE SPECS & INTERIOR ELEVATIONS

**CEILING**

**PAINT**
CP-1 <E> FIELD COLOR, SEMI-GLOSS, SEE SPECS

**DECORATIVE METAL DECKING**
M-1 UNFINISHED, SEE SPECS

JOB COPY
These plans mu[illegible] job at all times.
CITY OF MORGAN HILL
BUILDING DIVISION

## SYMBOL LEGEND

# FLOOR FINISH
# BASE FINISH
# WALL FINISH
# CEILING FINISH

WESTON MILES
ARCHITECTS
17500 Depot Street, Suite #200
Morgan Hill, CA 95037
1 •408 • 779 • 6686
• Architecture • Landscape •

REGISTERED ARCHITECT
WESTON R. MILES
STATE OF CALIFORNIA
NOT VALID WITHOUT SIGNATURE

REVISIONS
1 01/30/2019 PLAN CHECK #1
2
3

# FINISH PLAN

CENTENNIAL RECREATION CENTER EXPANSION PROJECT

CITY OF MORGAN HILL
171 W EDMINDSON AVE, MORGAN HILL, CA 95037

These drawings are instruments of service and are the property of WESTON MILES ARCHITECTS, INC. Ideas, designs and other information on the drawings are for use on the specified project and shall not be used otherwise without the expressed written permission of WESTON MILES ARCHITECTS, INC.

Written dimensions on these drawings shall have precedence over scaled dimensions. Contractors shall verify and be responsible for all dimensions. Discrepancies shall be reported and this office shall be notified of any variations from the dimensions and conditions shown by these drawings. Shop drawings must be submitted to this office for approval before proceedings with fabrication.

© Copyrighted 2018

DATE: 11/9/2018

JOB NO: 18001

A2.4

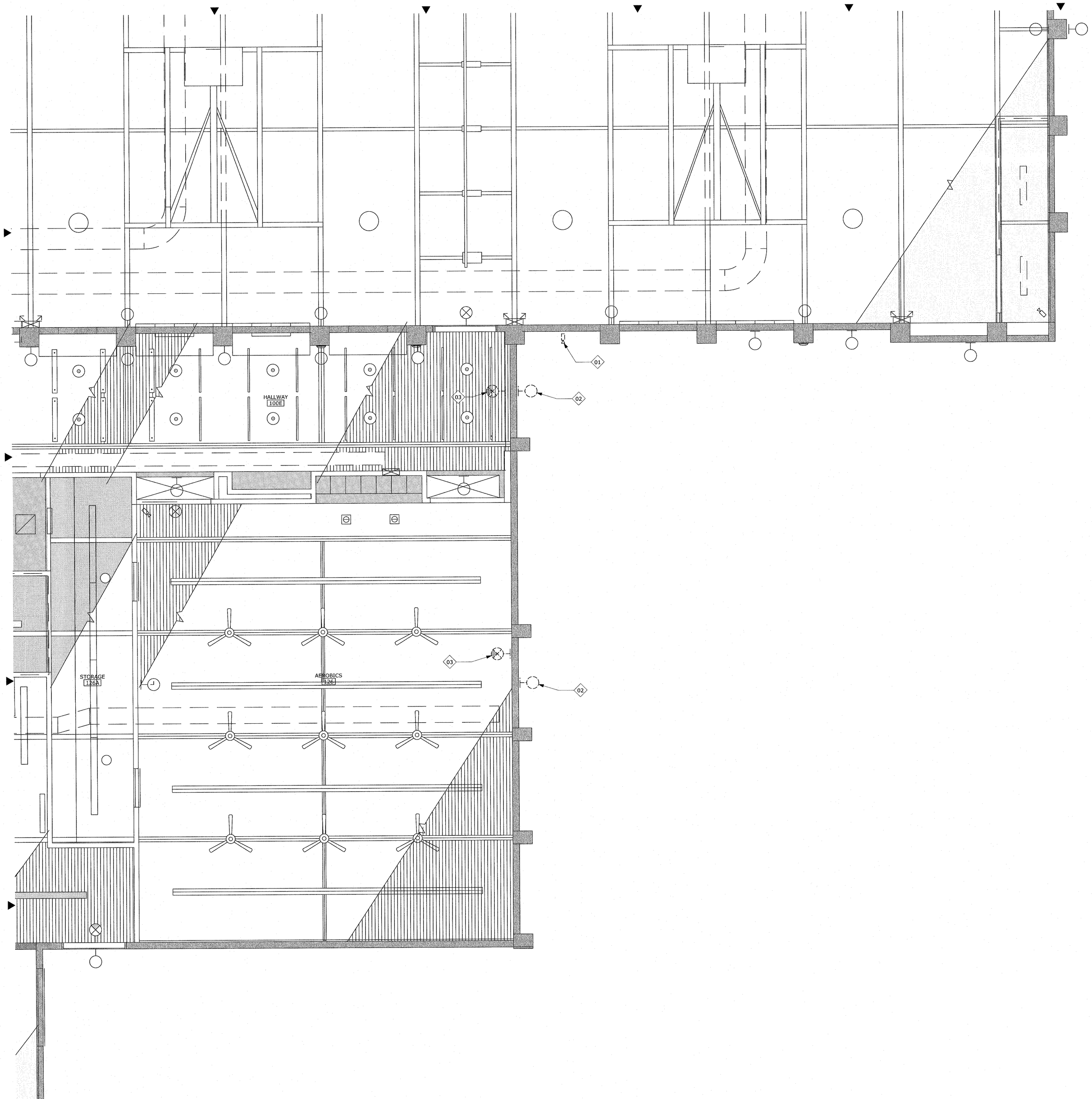


EXISTING/DEMO REFLECTED CEILING PLAN
SCALE: 1/4" = 1'-0"
1

REF. NORTH
TRUE NORTH

## GENERAL NOTES

## DEMOLITION KEY NOTES

01 SECURITY CAMERA TO BE RELOCATED - SEE ELECTRICAL DWGS

02 <E> LIGHT FIXTURES TO BE REMOVED AND SALVAGED

03 <E> EXIT SIGN TO BE RELOCATED

JOB COPY
These plans mu[illegible] job at all times.
CITY OF MORGAN HILL
BUILDING DIVISION

## SYMBOL LEGEND

<E> GYP. BD. CEILING, SEE PLAN FOR HEIGHT

<E> METAL DECK

WESTON MILES
ARCHITECTS
17500 Depot Street, Suite #200
Morgan Hill, CA 95037
1 • 408 • 779 • 6686
• Architecture • Landscape •

REGISTERED ARCHITECT
JAMES T. WESTON
STATE OF CALIFORNIA
NOT VALID WITHOUT SIGNATURE

REVISIONS
1 01/30/2019 PLAN CHECK #1
2
3

# EXISTING & DEMO REFLECTED CEILING PLAN

CENTENNIAL RECREATION CENTER EXPANSION PROJECT

CITY OF MORGAN HILL
171 W EDMUNDSON AVE, MORGAN HILL, CA 95037

These drawings are instruments of service and are the property of WESTON MILES ARCHITECTS, INC. All designs and plans shown on these drawings are intended for specific project and shall not be used otherwise without the expressed written permission of WESTON MILES ARCHITECTS, INC.

Written dimensions on these drawings shall have precedence over scaled dimensions. Contractors shall verify and be responsible for all dimensions and conditions on the job and this office shall be notified of any variations from the dimensions and conditions shown by these drawings. Shop details shall be submitted to this office for approval before proceeding with fabrication.

© Copyrighted 2018

DATE: 11/9/2018

JOB NO: 18001

A2.5

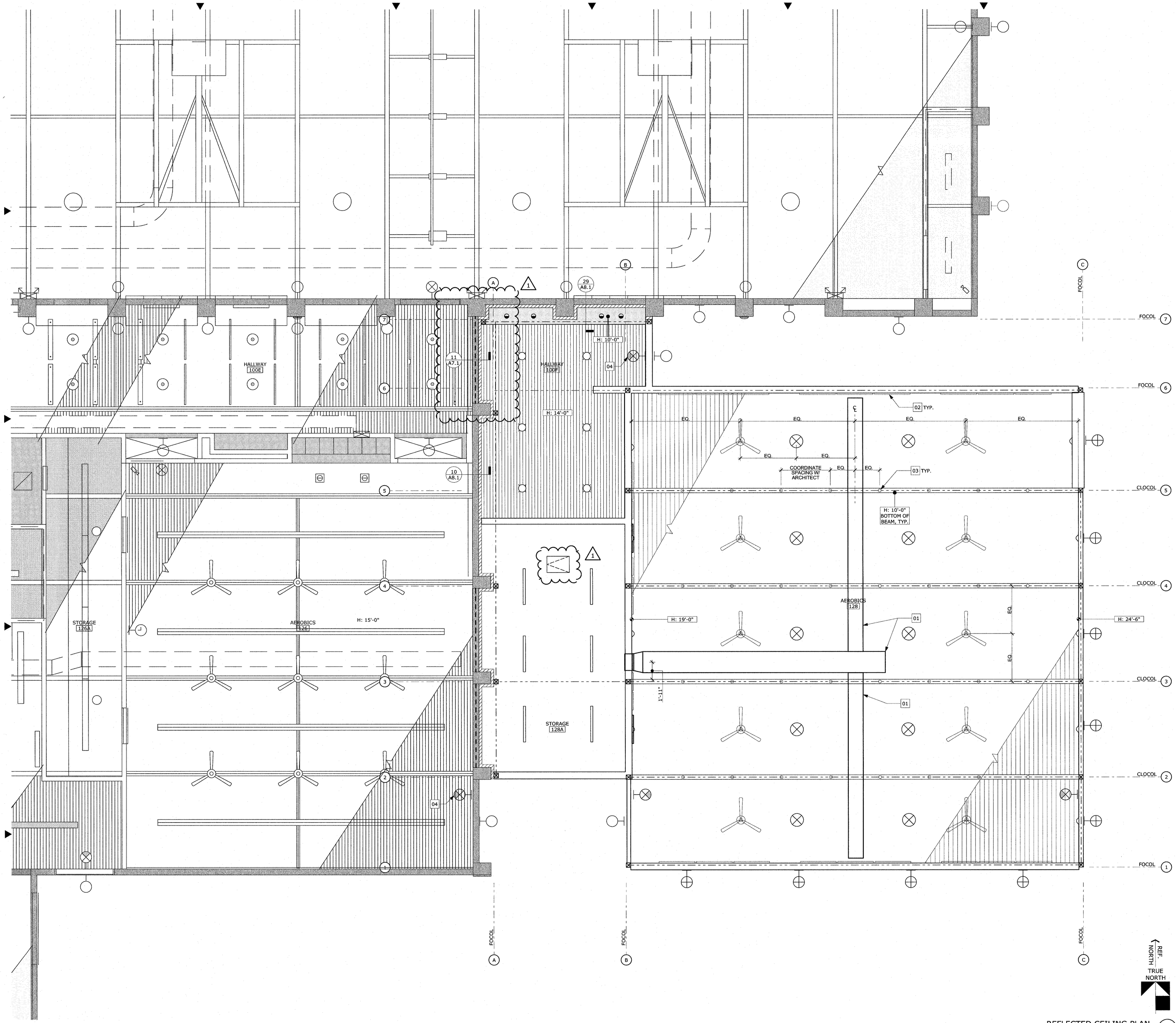


REFLECTED CEILING PLAN
SCALE: 1/4" = 1'-0"

## GENERAL NOTES

## KEY NOTES

##

01 DUCT - SMD

02 ACOUSTIC WALL PANEL, TYP. SEE INTERIOR ELEVATIONS

03 TRX XMOUNT, TYP.

04 RELOCATED EXIT SIGN

## SYMBOL LEGEND

- 1-HR RATED WALL SYMBOL
- H: #'-#" CEILING HEIGHT
- H: #'-#" SLOPED CEILING HEIGHT AT LOW/HIGH POINT
- <E> GYP. BD. CEILING, SEE PLAN FOR HEIGHT
- <E> METAL DECK
- (N) DECORATIVE METAL DECK, SEE FINISH PLAN
- (N) METAL DECK, SSD
- AIR DIFFUSER - SMD
- AIR RETURN - SMD
- SMOKE DETECTOR - SED
- DOWNLIGHT - SED
- WALL WASHER - SED
- SUSPENDED LIGHT FIXTURE - SED
- SUSPENDED LOW BAY LIGHT FIXTURE - SED
- WALL SCONCE - SED
- EXTERIOR LIGHT FIXTURE - SED
- SUSPENDED LINEAR LIGHT FIXTURE - SED
- CEILING FAN - SED
- 4" SEISMIC JOINT
- 22X30" ROOF HATCH

JOB COPY
These plans must remain on the job at all times.
CITY OF MORGAN HILL
BUILDING DIVISION


WESTON MILES
ARCHITECTS
17500 Depot Street, Suite #200
Morgan Hill, CA 95037
1 •408 • 779 • 6686
• Architecture • Landscape •


NOT VALID WITHOUT SIGNATURE

REVISIONS
1 01/30/2019 PLAN CHECK #1
2
3

# REFLECTED CEILING PLAN

## CENTENNIAL RECREATION CENTER EXPANSION PROJECT

CITY OF MORGAN HILL
171 W EDMUNDSON AVE, MORGAN HILL, CA 95037


These drawings are instruments of service and are the property of WESTON MILES ARCHITECTS, INC. All designs, details and decisions incl'd in drawings by INC are designed specified project and shall not be used otherwise without the expressed written permission of WESTON MILES ARCHITECTS, INC.

Written dimensions on these drawings shall have precedence over scale dimensions. Contractors shall verify and are responsible for all dimensions and conditions on the job and this office shall be notified of any variations from the dimensions and conditions shown on these drawings. Shop details shall be submitted to this office for approval before proceeding with fabrication.

© Copyrighted 2018


DATE: 11/9/2018

JOB NO.: 18001

A2.6

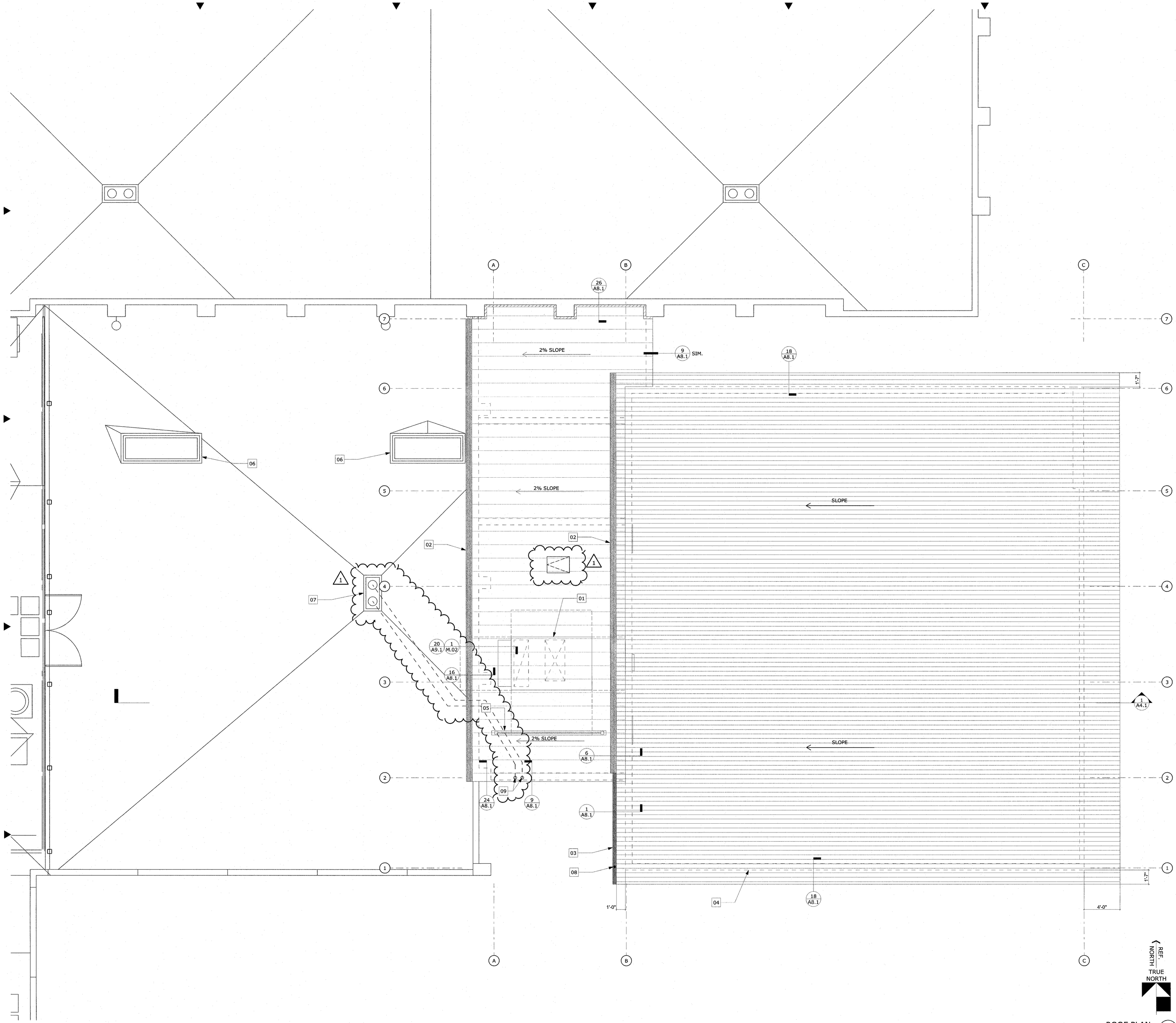


ROOF PLAN
SCALE: 1/4" = 1'-0"

## GENERAL NOTES

1. ROOF CLASSIFICATION A PER CBC TABLE 15-A & SECTION 1504
2. ALL ROOFTOP MECHANICAL EQUIPMENT SHALL BE SCREENED FROM GROUND LEVEL
3. FOR ROOF DECK NAILING PATTERN SEE 19/A8.1

## KEY NOTES

##

| | |
|---|---|
| 01 | ROOF TOP HVAC UNIT - SMD |
| 02 | RAINHANDLER GUTTER |
| 03 | MTL GUTTER SYSTEM, TYP. |
| 04 | LINE OF EXTERIOR WALL BELOW, TYP. |
| 05 | MECH SCREEN, SSD |
| 06 | <E> SKYLIGHT |
| 07 | <E> DRAIN AND OVERFLOW |
| 08 | RWL, TYP. |
| 09 | CONNECT <E> 4" CAST IRON DRAIN AND OVERFLOW TO (N) LOCATION, SEE DETAIL 6/A9.1 FOR OVERFLOW SPOUT, SEE PLUMBING AND CIVIL DRAWINGS FOR ADDITIONAL INFORMATION (2) |

JOB COPY
These plans must be kept on the job at all times.
CITY OF MORGAN HILL
BUILDING DIVISION

## SYMBOL LEGEND

- (N) ARCH METAL ROOF, SSD
- (N) TPO LOW-SLOPE ROOF
- 4" SEISMIC JOINT
- 22X30" ROOF HATCH (1)


WESTON MILES
ARCHITECTS
17500 Depot Street, Suite #200
Morgan Hill, CA 95037
1 •408 • 779 • 6686
• Architecture • Landscape •


NOT VALID WITHOUT SIGNATURE

REVISIONS
1 01/30/2019 PLAN CHECK #1
2 03/27/2019 PLAN CHECK #2
3

# ROOF PLAN

CENTENNIAL RECREATION CENTER EXPANSION PROJECT

CITY OF MORGAN HILL
171 W EDMUNDSON AVE, MORGAN HILL, CA 95037


These drawings are instruments of service and are the property of WESTON MILES ARCHITECTS. The designs and other information on the drawings are for use on the specified project and shall not be used otherwise without the written permission of the permission of WESTON MILES ARCHITECTS, INC.


Written dimensions on these drawings shall have precedence over scaled dimensions. Contractors shall verify and be responsible for all dimensions and conditions on the job and this office shall be notified of any variations from the dimensions and conditions shown by these drawings. Shop drawings must be submitted to this office for approval before proceeding with fabrication.


© Copyright 2018


DATE: 11/9/2018
JOB NO: 18001

A2.8

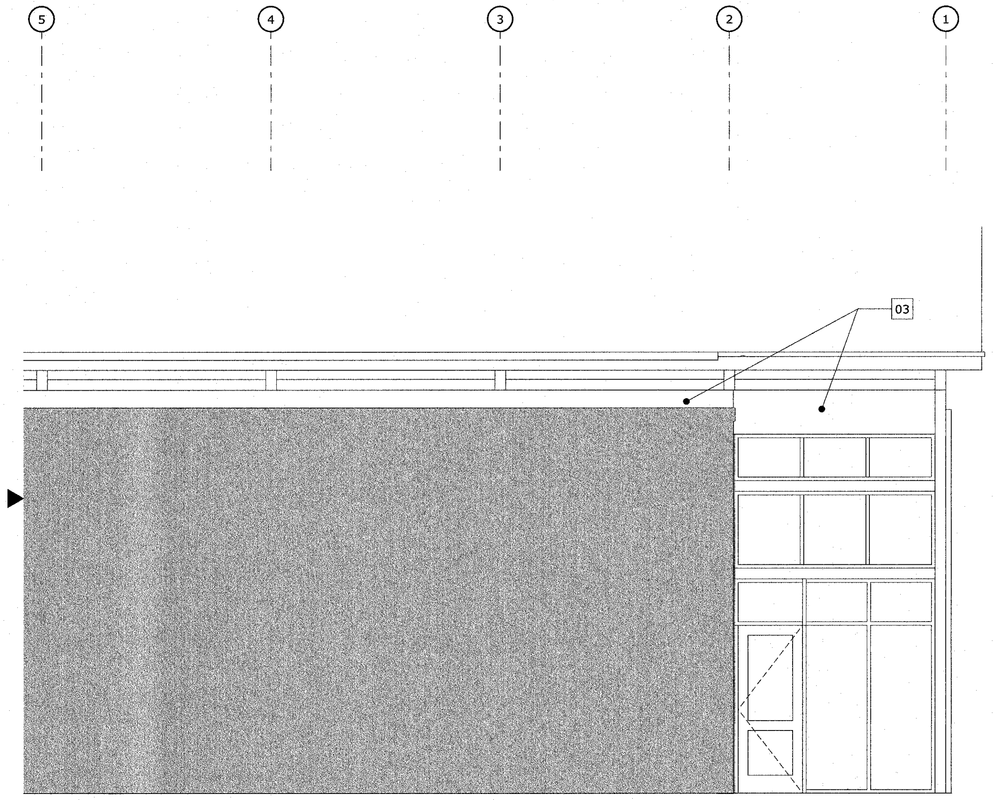


EAST 5
SCALE: 1/4" = 1'-0"

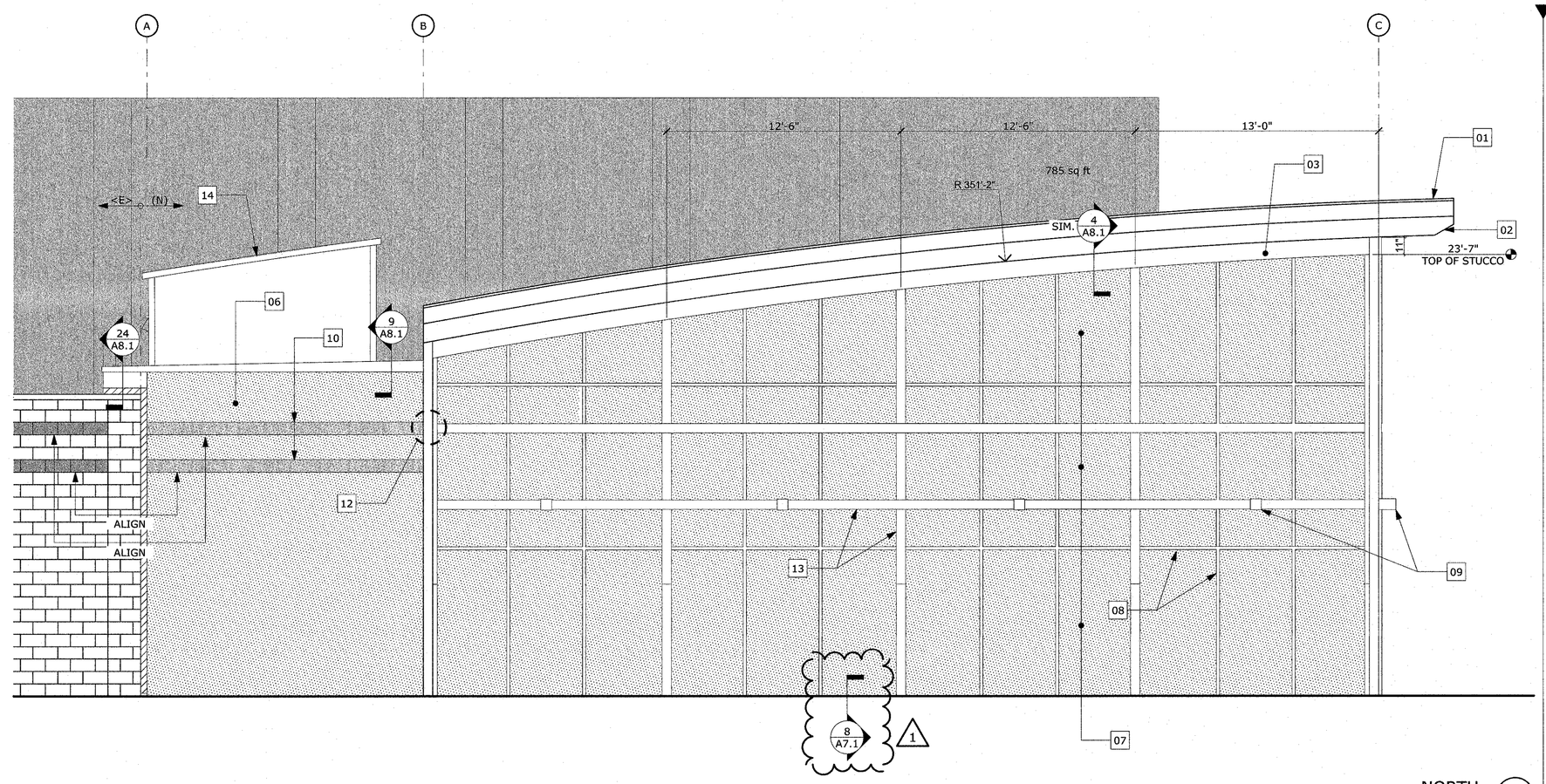


NORTH 3
SCALE: 1/4" = 1'-0"

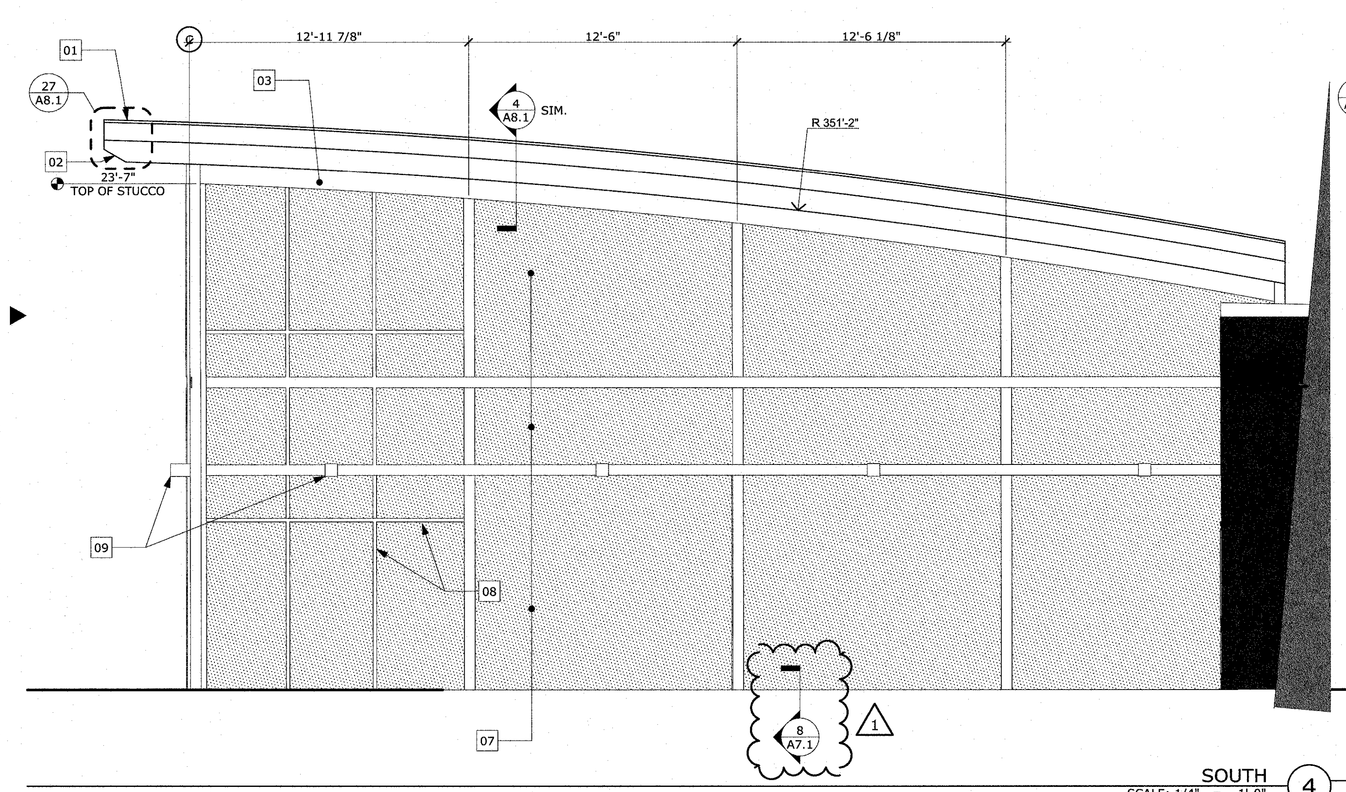


SOUTH 4
SCALE: 1/4" = 1'-0"

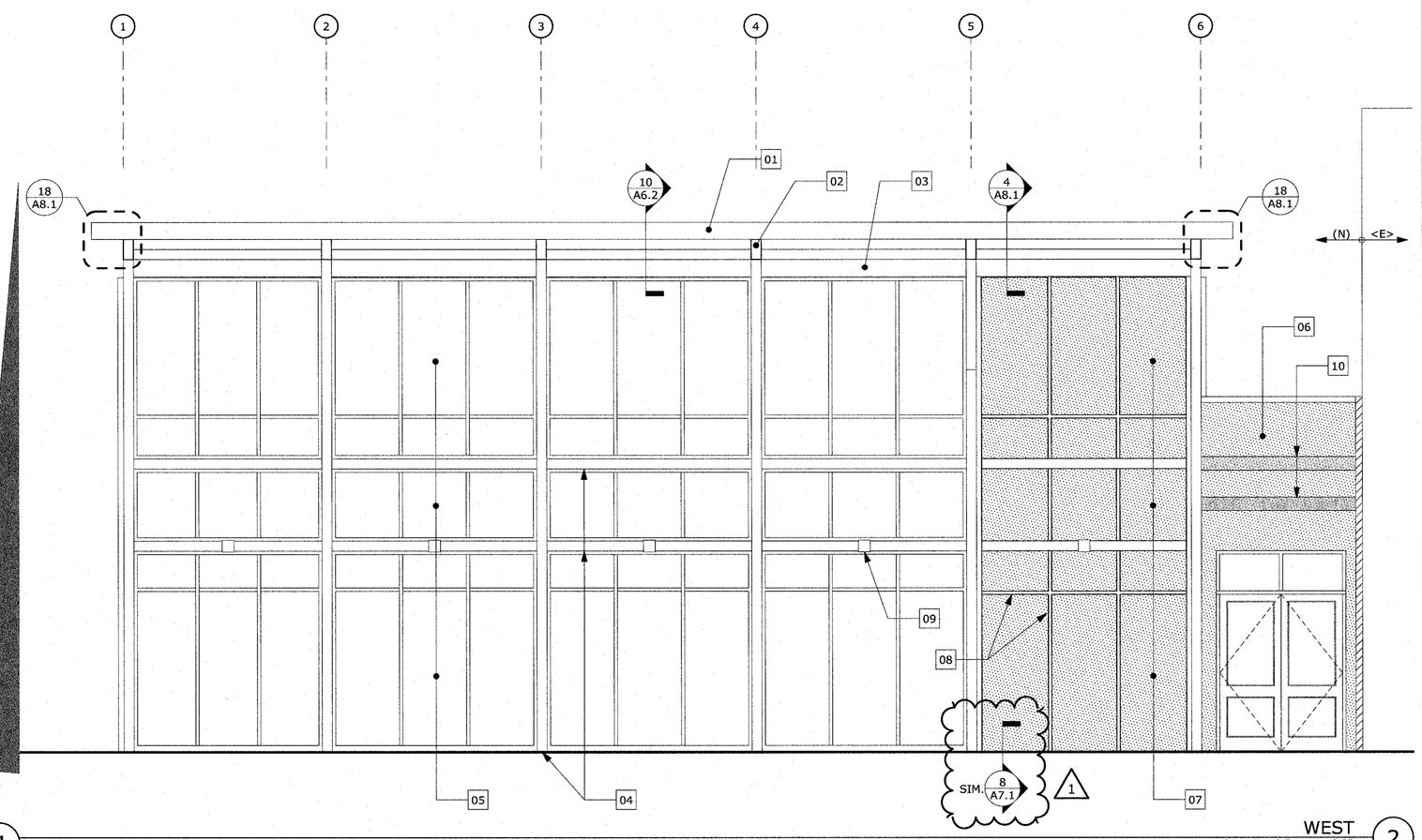


WEST 2
SCALE: 1/4" = 1'-0"

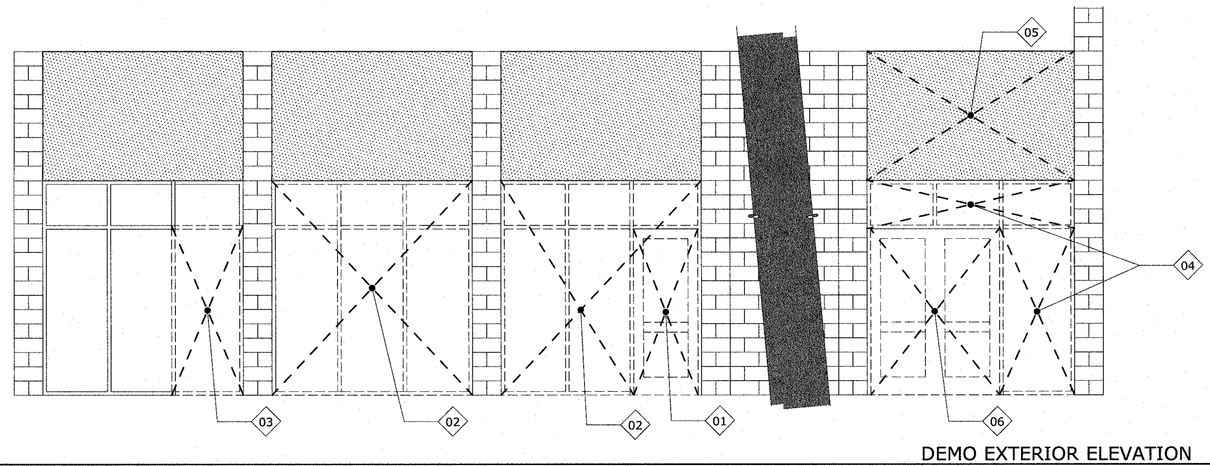


DEMO EXTERIOR ELEVATION 1
SCALE: 1/4" = 1'-0"

## GENERAL NOTES

## DEMOLITION KEY NOTES

| # | |
|---|---|
| 01 | <E> STOREFRONT DOOR AND HARDWARE TO BE REMOVED AND RELOCATED, SEE 126C ON WINDOW AND DOOR SCHEDULE ON A6.1. <E> MASONRY WALL AND FLOOR TO BE PROTECTED DURING DEMO |
| 02 | <E> STOREFRONT WINDOW TO BE REMOVED & DISCARDED. <E> MASONRY WALL TO BE PROTECTED DURING DEMO, SEE A/A7.1 FOR WALL INFILL DETAIL |
| 03 | <E> STOREFRONT WINDOW TO BE REMOVED & DISCARDED. PREPARE FOR (N) DOOR. <E> MASONRY WALL TO BE PROTECTED DURING DEMO, SEE 126C ON WINDOW AND DOOR SCHEDULE ON A6.1 |
| 04 | <E> STOREFRONT DOOR FRAME, AND TRANSOM TO BE REMOVED & DISCARDED. <E> MASONRY WALL AND STUCCO TO BE PROTECTED DURING DEMO |
| 05 | REMOVE <E> STUCCO. PROTECT MASONRY WALL BEHIND. |
| 06 | <E> STOREFRONT DOOR AND HARDWARE TO BE REMOVED AND RELOCATED, SEE 100A ON WINDOW AND DOOR SCHEDULE ON A6.1. <E> MASONRY WALL AND FLOOR TO BE PROTECTED DURING DEMO |

## KEY NOTES

| ## | |
|---|---|
| 01 | METAL ROOF AND FASCIA, SEE SPECS FOR COLOR |
| 02 | PAINTED RADIUSED GALV TS BEAMS, SEE SPECS FOR COLOR |
| 03 | PAINTED GALV STL PLATES, SEE SPECS FOR COLOR |
| 04 | PAINTED GALV TS COLUMN OR MEMBER, SEE SPEC FOR COLOR |
| 05 | METAL FRAME WINDOWS WITH INSULATED GLASS, TYP. |
| 06 | STUCCO |
| 07 | PAINTED STUCCO, SEE SPEC FOR COLORS, TYP. |
| 08 | 3/4" X 2" MTL REGLET, TYP SEE 12/A7.1 |
| 09 | LIGHT FIXTURE, TYP |
| 10 | PAINTED STUCCO, SEE SPECS FOR COLORS, TYP. |
| 11 | NOT USED |
| 12 | ALIGN THE CENTERLINE HEIGHT OF THE REGLET WITH THE CENTERLINE HEIGHT OF THE <E> DECORATIVE TILE/CMU BAND |
| 13 | 3/4" X 6" MTL REGLET, TYP SEE 12/A7.1 SIM. |
| 14 | MECHANICAL SCREEN, SSD |

JOB COPY
These plans must be kept at the job at all times.
CITY OF MORGAN HILL
BUILDING DIVISION

WESTON MILES
ARCHITECTS
17500 Depot Street, Suite #200
Morgan Hill, CA 95037
1 •408 • 779 • 6686
• Architecture • Landscape •

REGISTERED ARCHITECT
STATE OF CALIFORNIA
NOT VALID WITHOUT SIGNATURE

REVISIONS
1 01/30/2019 PLAN CHECK #1
2
3

# EXTERIOR ELEVATIONS

## CENTENNIAL RECREATION CENTER EXPANSION PROJECT

CITY OF MORGAN HILL
171 W EDMUNDSON AVE, MORGAN HILL, CA 95037

These drawings are instruments of service and are the property of WESTON MILES ARCHITECTS, INC. All designs and plans indicated or represented herein are for the specified project and shall not be used otherwise without the expressed written permission of WESTON MILES ARCHITECTS, INC.

Written dimensions on these drawings shall have precedence over scale dimensions. Contractors shall be fully responsible for all dimensions and conditions on the job and this office shall be notified of any variations from the dimensions and conditions shown by these drawings. Shop details shall be submitted to this office for approval before proceeding with fabrication.

© Copyrighted 2018

DATE: 11/9/2018

JOB NO: 18001

A3.1

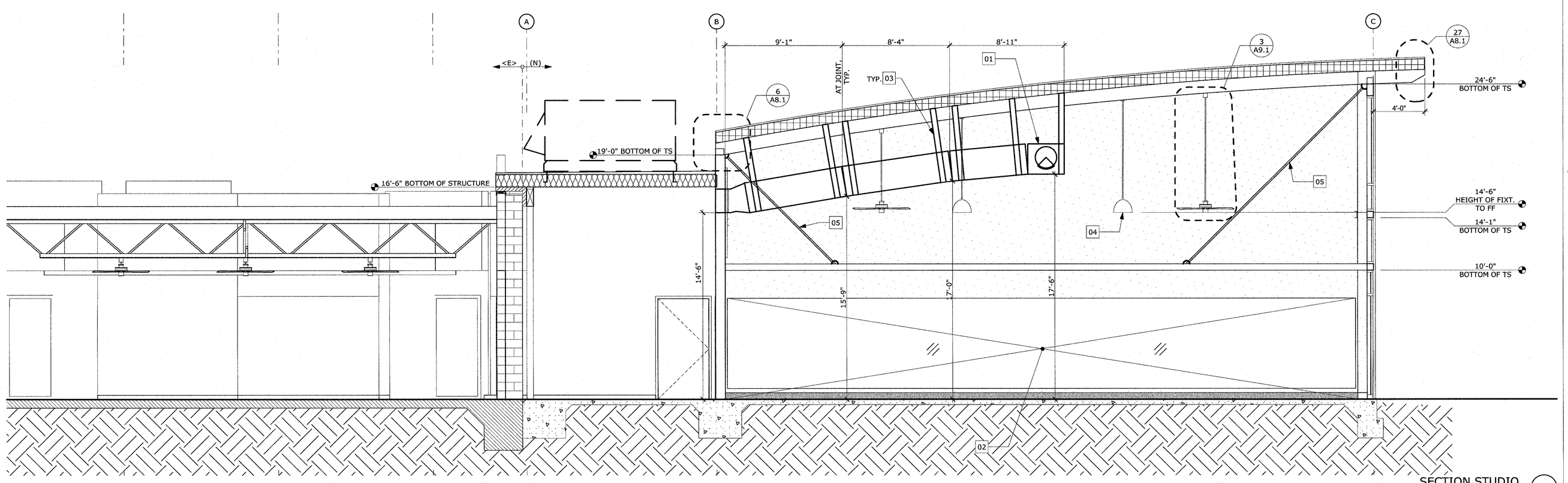


SECTION STUDIO 1
SCALE: 1/4" = 1'-0"

## GENERAL NOTES

1. IN CONCEALED SPACES OF STUD WALLS PROVIDE 2X SOLID FIRE BLOCKING AT CEILING LEVELS, FLOOR LEVELS AND AT 10 FOOT INTERVALS BOTH HORIZONTAL & VERTICAL. ALL FIRE BLOCKING SHALL BE IN ACCORDANCE WITH CBC SECTION 717

## KEY NOTES

##

| | |
|---|---|
| 01 | FOR MECHANICAL BRACING SEE 1/A9.1 |
| 02 | MIRROR, SEE INTERIOR ELEVATIONS FOR MORE INFORMATION |
| 03 | METAL DUCT SUPPORT, SEE 1/A9.1 |
| 04 | BOTTOM OF LIGHT FIXTURE TO BE MOUNTED LOWER THAN FAN BLADES. |
| 05 | DIAGONAL ROD BRACE, SSD |

JOB COPY
These plans mu[illegible] job at all times.
CITY OF MORGAN HILL
BUILDING DIVISION

## SYMBOL LEGEND

4" SEISMIC JOINT

GYP BOARD, SEE FINISH PLAN


WESTON MILES
ARCHITECTS
17500 Depot Street, Suite #200
Morgan Hill, CA 95037
1 • 408 • 779 • 6686
• Architecture • Landscape •


REGISTERED ARCHITECT
JEFFREY A. WESTON
C-17,651
STATE OF CALIFORNIA
NOT VALID WITHOUT SIGNATURE

REVISIONS
1 01/30/2019 PLAN CHECK #1
2
3

# BUILDING SECTIONS

## CENTENNIAL RECREATION CENTER EXPANSION PROJECT

CITY OF MORGAN HILL
171 W EDMUNDSON AVE, MORGAN HILL, CA 95037


These drawings are instruments of service and are the property of WESTON MILES ARCHITECTS, INC. All designs and other information on the drawings are for use on the specified project and shall not be used otherwise without the written consent and permission of WESTON MILES ARCHITECTS, INC.

Written dimensions on these drawings shall have primacedce over scaled dimensions. Contractors shall verify and be responsible for all dimensions and conditions on the job and report any errors, omissions or conflicting dimensions and conditions shown by these drawings. Shop details shall be submitted to this office for approval before proceeding with fabrication.

© Copyrighted 2018


DATE: 11/9/2018

JOB NO: 18001

A4.1

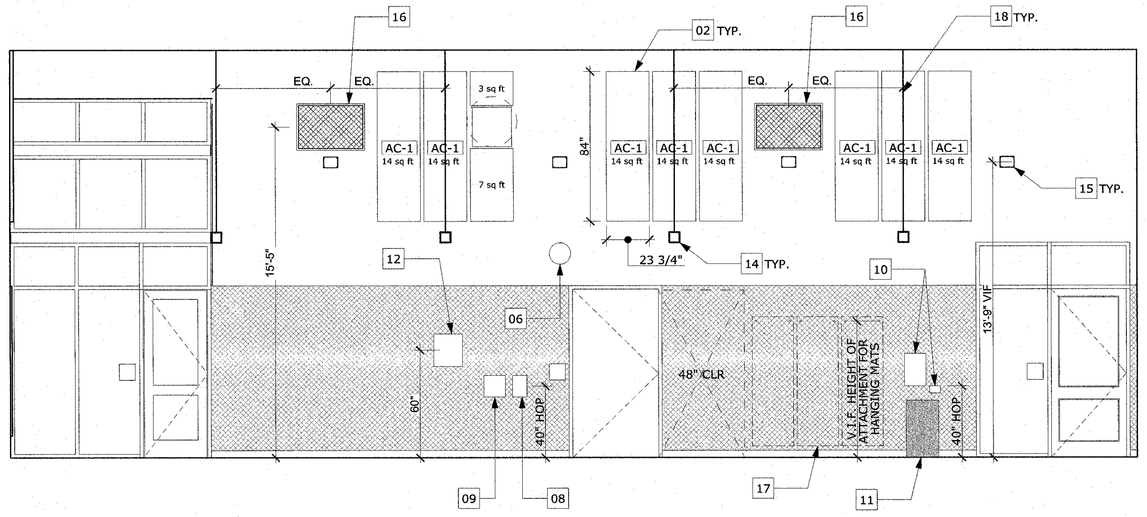


D

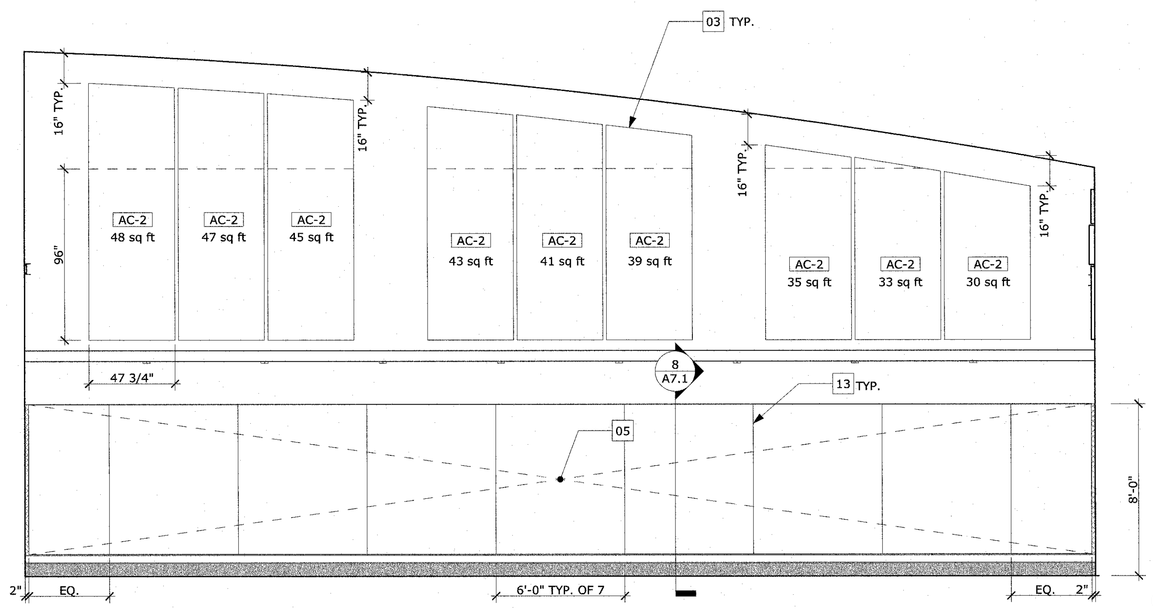


C

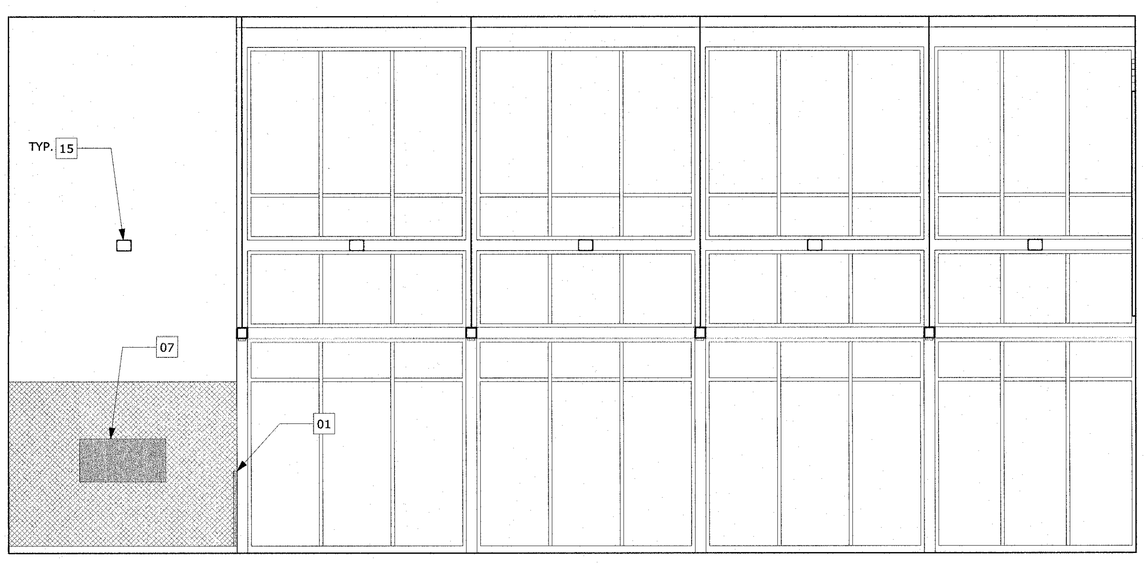


B

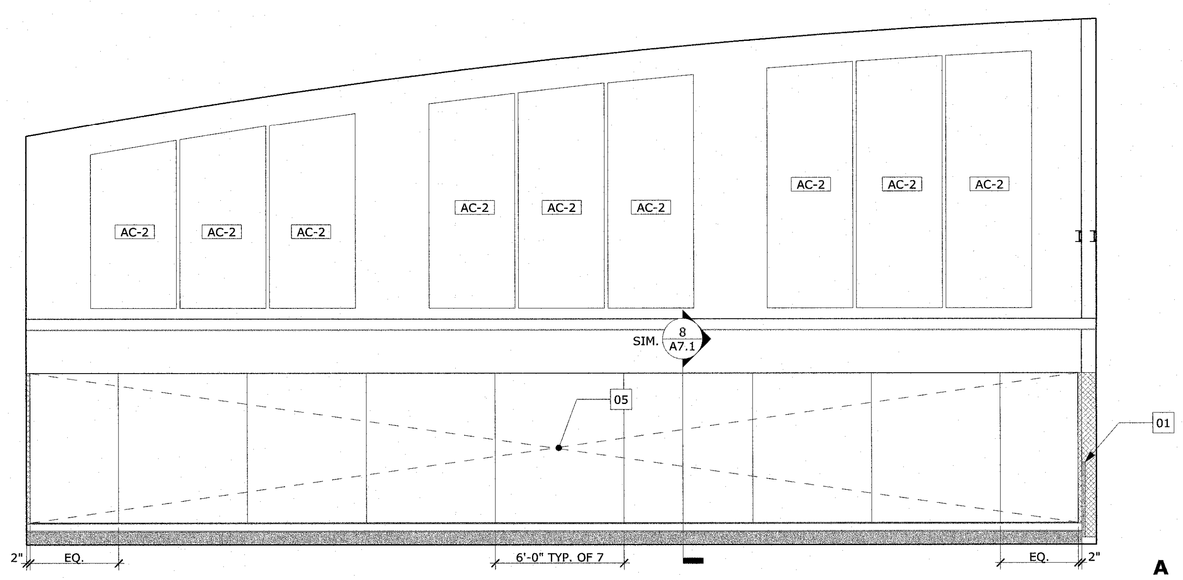


A

STUDIO INTERIOR
SCALE: 1/4" = 1'-0"
1

## GENERAL NOTES

1. HOP - HIGHEST OPERABLE PART
2. RS - REFLECTIVE SURFACE

## KEY NOTES

##

| | |
|---|---|
| 01 | CORNER GUARDS |
| 02 | 23-3/4" X 96" TECTUM DIRECT ATTACH WALL PANEL CUT IN FIELD TO 23-3/4" X 84" AND PAINTED, SEE SPECS FOR COLOR. WHERE LOCATED, DO NOT TAPE SEAMS, TEXTURE, OR PAINT GYP BOARD. ENSURE SCREW HEADS ARE FLUSH OR INSET FACE OF GYP BOARD |
| 03 | 47-3/4" X 96" TECTUM DIRECT ATTACH WALL PANEL CUT IN FIELD AND PAINTED, SEE SPECS FOR COLOR. WHERE LOCATED, DO NOT TAPE SEAMS, TEXTURE, OR PAINT GYP BOARD. ENSURE SCREW HEADS ARE FLUSH OR INSET FACE OF GYP BOARD |
| 04 | NOT USED |
| 05 | WHERE MIRRORS ARE LOCATED, DO NOT TAPE SEAMS, TEXTURE, OR PAINT GRP BOARD. ENSURE SCREW HEADS ARE FLUSH OR INSET FACE OF GYP BOARD. CENTER OF WALL SHALL NOT HAVE A MIRROR SEAM |
| 06 | CLOCK, SEE SPECS |
| 07 | BULLETIN BOARD, SEE SPECS |
| 08 | HAND SANITIZER DISPENSER, SEE SPECS |
| 09 | WALL MOUNTED FIRST AID KIT, SEE SPECS |
| 10 | PAPER TOWEL DISPENSER AND SPRAY BOTTLE HOLDER, SEE SPECS |
| 11 | TRASH CAN, SEE SPECS |
| 12 | SOUNDEAR SENSOR, SEE SPECS |
| 13 | APPLY 1/16" FOAM TAPE BETWEEN MIRRORS, TYP. |
| 14 | BEAM, SSD |
| 15 | LIGHT FIXTURE, SED |
| 16 | MECHANICAL RETURN GRILLE |
| 17 | HANGING MATS |
| 18 | CABLE BRACE |

JOB COPY
These plans mu[illegible] job at all times.
CITY OF MORGAN HILL
BUILDING DIVISION

## SYMBOL LEGEND

WALLCOVERING, SEE SPECS

WESTON MILES
ARCHITECTS
17500 Depot Street, Suite #200
Morgan Hill, CA 95037
1 •408 • 779 • 6686
• Architecture • Landscape •

NOT VALID WITHOUT SIGNATURE

REVISIONS
1 01/30/2019 PLAN CHECK #1
2
3

# INTERIOR ELEVATIONS

CENTENNIAL RECREATION CENTER EXPANSION PROJECT

CITY OF MORGAN HILL
171 W EDMUNDSON AVE, MORGAN HILL, CA 95037

These drawings are instruments of service and are the property of WESTON MILES ARCHITECTS, INC. All designs and other information on this drawings are for use on the specified project and shall not be used otherwise without the written consent, permission of WESTON MILES ARCHITECTS, INC.

Written dimensions on these drawings shall have precedence over scaled dimensions. Contractors shall verify and be responsible for all dimensions and conditions on the job and report any errors, omissions or conflicting dimensions and conditions shown by these drawings. Shop details shall be submitted to this office for approval before proceeding with fabrication.

© Copyrighted 2018

DATE: 11/9/2018

JOB NO: 18001

A5.1

## DOOR SCHEDULE

| ID | TYPE | SIZE WXH | DOOR MATERIAL | DOOR FINISH | FRAME MATERIAL | FRAME FINISH | HARDWARE | SIGNAGE | SPECIFIC REMARKS |
|---|---|---|---|---|---|---|---|---|---|
| 100A | 3 | 6'-1 1/4"x7'-10" | <E> | <E> | ALUM | PRE-FINISHED | SEE SPEC | | 3,5 |
| 100B | 2 | 4'-0"x7'-10" | WOOD | CLEAR | HM | PRE-FINISHED | SEE SPEC | | |
| 100C | 4 | 6'-0"x7'-10" | METAL | PRE-FINISHED | ALUM | PRE-FINISHED | SEE SPEC | | 2,3,6 |
| 126C | 1 | 3'-0"x7'-10" | <E> | <E> | <E> | <E> | SEE SPEC | | 1,3,7 |
| 126D | 2 | 4'-0"x7'-10" | WOOD | CLEAR | HM | PRE-FINISHED | SEE SPEC | | 2,8 |
| 128A | 1 | 3'-6"x7'-10" | WOOD | CLEAR | ALUM | PRE-FINISHED | SEE SPEC | | 3,4 |
| 128B | 2 | 4'-0"x7'-10" | WOOD | CLEAR | HM | PRE-FINISHED | SEE SPEC | | 8 |
| 128C | 1 | 3'-0"x7'-10" | ALUM | PRE-FINISHED | ALUM | PRE-FINISHED | SEE SPEC | | 1,3,4 |
| G1 | | 6'-0"x6'-8" | | | | | SEE SPEC | | 3,9 |

## DOOR TYPES

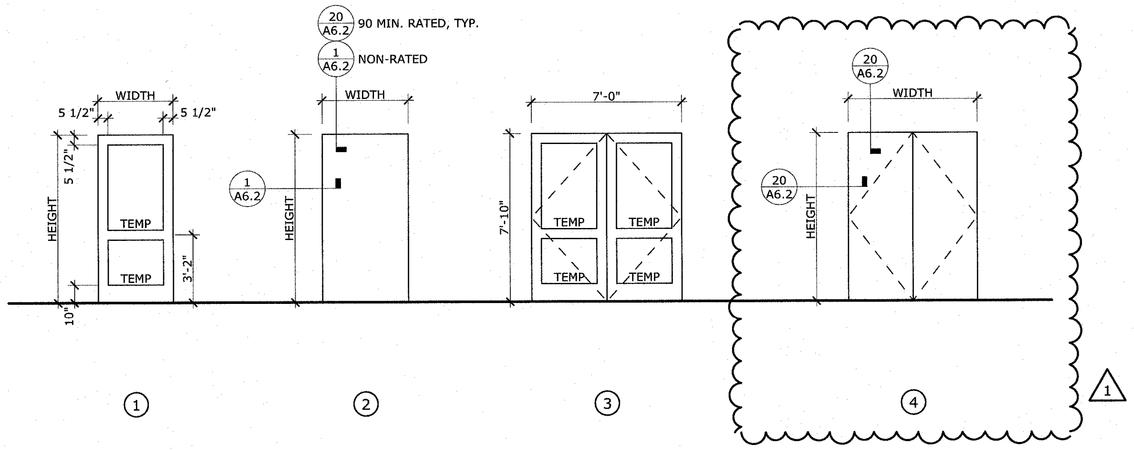


## WINDOW SCHEDULE

| ID | TYPE | MATERIAL | FINISH | GLAZING | SPECIFIC REMARKS |
|---|---|---|---|---|---|
| 100A | 4 | ALUM | PRE-FINISHED | CLEAR | |
| 126C | <E> | <E> | <E> | <E> | |
| 128A | 1 | ALUM | PRE-FINISHED | CLEAR | 2 |
| 128B | 3 | ALUM | PRE-FINISHED | CLEAR | |
| 128C | 3 | ALUM | PRE-FINISHED | CLEAR | |
| 128D | 3 | ALUM | PRE-FINISHED | CLEAR | |
| 128E | 3 | ALUM | PRE-FINISHED | CLEAR | |
| 128F | 2 | ALUM | PRE-FINISHED | CLEAR | |

## WINDOW TYPES

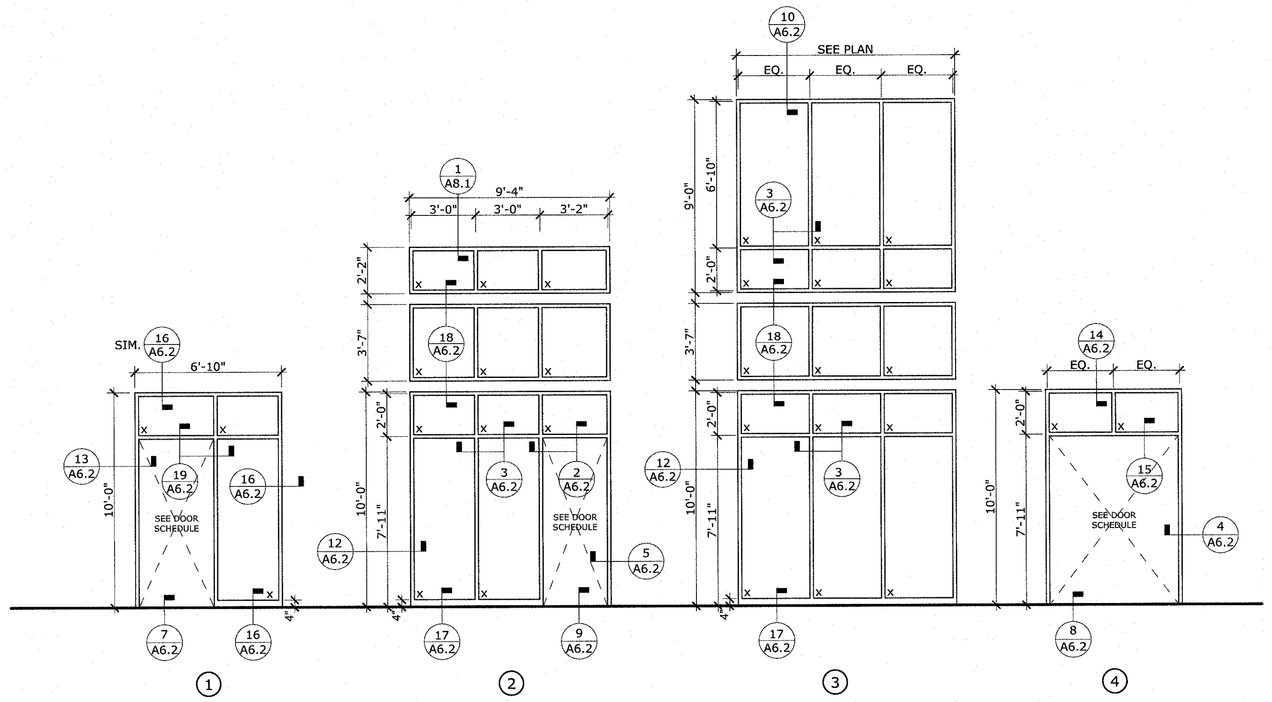


## GENERAL NOTES

1. DOOR OPENING EFFORTS - NOT TO EXCEED 5 LBS AT EXTERIOR & INTERIOR. 15 LBS FORCE REQUIRED TO ACHIEVE POSITIVE LATCHING FOR FIRE DOORS
2. ALL DOORS ARE EQUIPPED WITH HAND-ACTIVED HARDWARE, INCLUDING ALL DEAD BOLTS, ARE TO BE MOUNTED BETWEEN 30" & 44" ABOVE THE FINISH FLOOR (36" PREFERRED).
3. ALL DOORS, FINISH, AND LEVER HARDWARE, SEE SPECS
5. VERIFY DOOR ROUGH OPENING SIZE IN FIELD
6. FOR EXACT THROAT DIMENSIONS OF DOOR FRAMES, AND ADDITIONAL INFORMATION, REFER TO STRUCTURAL SHEAR WALL PLAN, ARCHITECTRUAL FINISH SCHEDULE AND DETAILS
7. GLASS IN DOORS SHALL BE TEMPERED. SEE SPECIFICATIONS
8. FOR SIGNAGE REQUIREMENTS SEE EGRESS PLAN ON 1/A2.3
10. SAFETY GLAZING - ALL GLAZING SHALL COMPLY W/ CBC 2406. SAFETY GLAZING TO BE TEMPERED W/ PERMANENT IDENTIFICATION. INNER AND OUTER LIGHTS OF INSULATING UNITS TO BE TEMPERED x= tempered
11. A WINDOW THAT IS IN THE PATH OF TRAVEL SHALL HAVE PROJECTION OF NO MORE THAN 4"
12. FIXED GLAZING REFERS TO GLASS UNITS INSTALLED DIRECTLY IN STOREFRONT SYSTEM FRAME, U.N.O.
13. REFER TO DOOR SCHEDULE FOR ADDITIONAL INFORMATION.
14. SEE SPECS FOR GLAZING TYPES.
15. FABRICATOR TO VERIFY DIMENSIONS WITH AS BUILT CONDITIONS PRIOR TO FABRICATION.
16. SEE WINDOW SCHEDULE FOR STOREFRONT SYSTEM CONFIGURATION

## SPECIFIC REMARKS

1. EXIT DOORS SHALL BE OPENED FROM THE INSIDE WITHOUT THE USE OF A KEY OR ANY SPECIAL KNOWLEDGE OR EFFORT. MANUALLY OPERATED EDGE - OR SURFACE MOUNTED FLUSH BOLTS AND SURFACE BOLTS SHALL NOT BE USED ON EXIT DOORS. ALL EXIT DOORS SHALL BE PROVIDED WITH PANIC HARDWARE PER SECTION 1007.2.5, AND KICK PLATE AT PUSH SIDE.
2. 90 MINUTE RATED DOOR, SEE DETAIL 20/A6.2
3. PANIC HARDWARE
4. SEE WINDOW TYPES FOR WINDOW/DOOR CONFIGURATION
5. <E> DOOR/HARDWARE RELOCATED. INSTALL NEW FRAME.
6. DOOR ON AUTOMATIC HOLD OPEN, SEE SPECS
7. <E> DOOR/HARDWARE RELOCATED.
8. SEE 11/A6.2 FOR THRESHOLD DETAIL, WOOD TO CONC.
9. FOR GATE DETAILS SEE 1/A1.2 AND GATE HARDWARE SPEC

## DOOR TAGS FLOOR PLAN

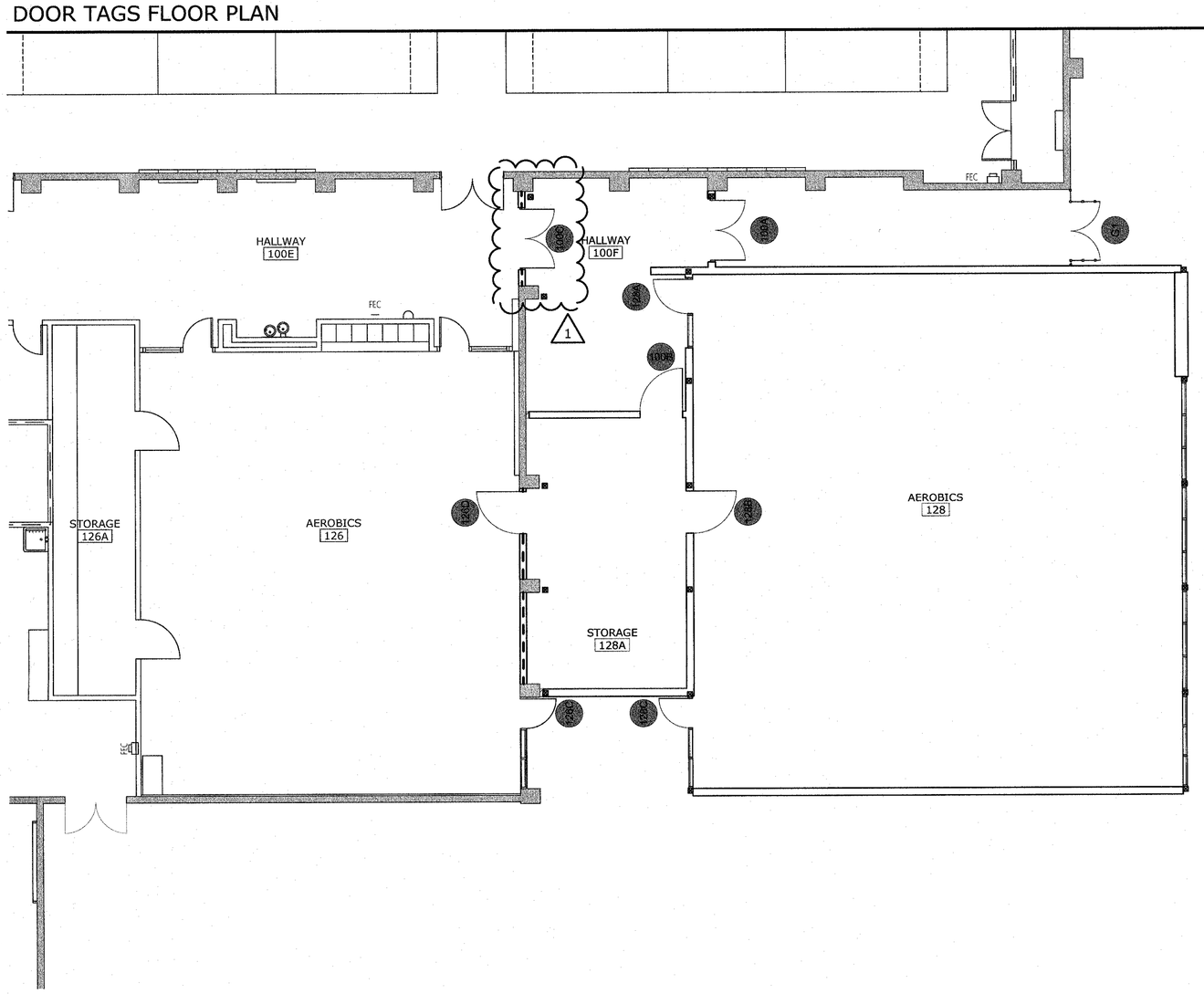


## WINDOW TAGS FLOOR PLAN

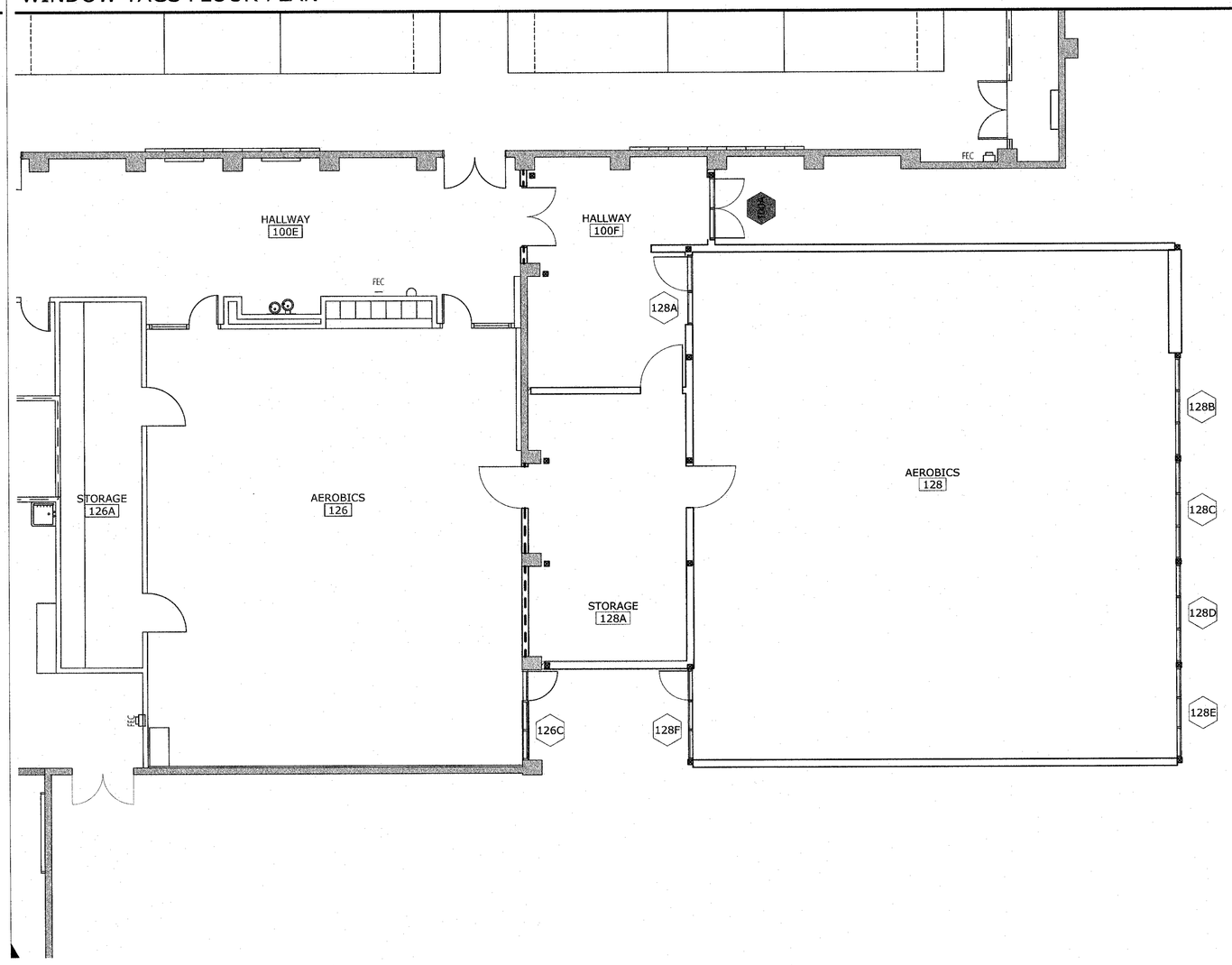


JOB COPY
These plans must be kept on the job at all times.
CITY OF MORGAN HILL
BUILDING DIVISION


WESTON MILES
ARCHITECTS
17500 Depot Street, Suite #200
Morgan Hill, CA 95037
T • 408 • 779 • 6686
• Architecture • Landscape •


NOT VALID WITHOUT SIGNATURE

REVISIONS
1 01/30/2019 PLAN CHECK #1
2
3

# DOOR AND WINDOW SCHEDULE

CENTENNIAL RECREATION CENTER EXPANSION PROJECT

CITY OF MORGAN HILL
171 W EDMUNDSON AVE, MORGAN HILL, CA 95037


These drawings are instruments of service and are the property of WESTON MILES ARCHITECTS, INC. All designs and other information on the drawings are for use on the specified project and shall not be used otherwise without the expressed written permission of WESTON MILES ARCHITECTS, INC.


Written dimensions on these drawings shall have precedence over scale dimensions. Contractors shall be fully responsible for all dimensions and conditions on the job and this office shall be notified of any variations from the dimensions and conditions shown on the drawings. Shop drawings must be submitted to this office for approval before proceeding with fabrication.


© Copyrighted 2018


DATE: 11/9/2018

JOB NO.: 18001

A6.1

# DOOR & WINDOW DETAILS

CENTENNIAL RECREATION CENTER EXPANSION PROJECT

CITY OF MORGAN HILL
171 W EDMUNSON AVE, MORGAN HILL, CA 95037

# A6.2

Job No. 18001

Date: 11/9/2018

© Copyrighted 2018

These drawings and specifications are the property of WESTON MILES ARCHITECTS, Inc. as an instrument of service which is the property of the client for use on the specified project and may not be used otherwise without the written consent of WESTON MILES ARCHITECTS, Inc.

Written dimensions on these drawings shall take precedence over scaled dimensions. Contractors shall verify and be responsible for all dimensions and conditions on the job and report any discrepancies before proceeding with the work. Drawings shall not be scaled for dimensions or to delete information provided with dimensions.

REVISIONS

1 01/30/2019 RAM CHECK #1

2

3

NOT VALID WITHOUT SIGNATURE

WESTON MILES
ARCHITECTS
17500 Depot Street, Suite #200
Morgan Hill, CA 95037
t •408 • 779 • 6686
• Architecture • Landscape •

## 16 INT. ALUM WINDOW HEAD/JAMB/SILL

SCALE: 3" = 1'-0"

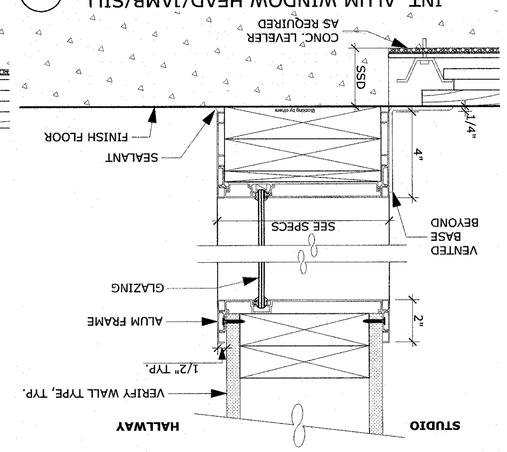


## 11 WOOD FLR. TO CONC INT. THRESHOLD

SCALE: 3" = 1'-0"

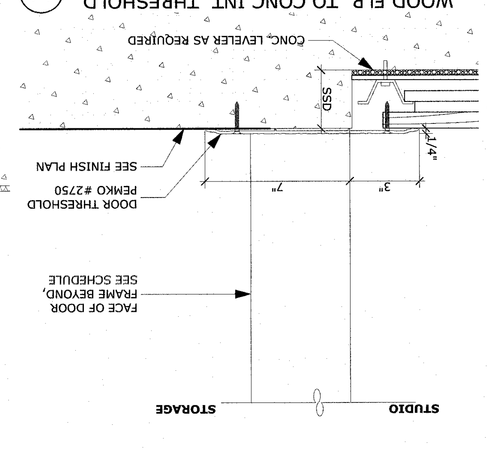


## 6 CARPET TO CONC. FLR. THRESHOLD

SCALE: 3" = 1'-0"

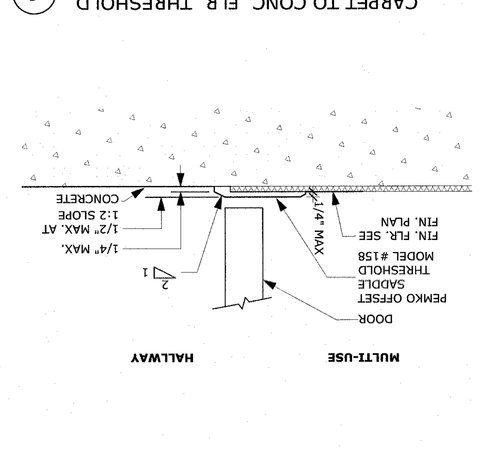


## 1 INT. HM DOOR HEAD/JAMB

SCALE: 3" = 1'-0"

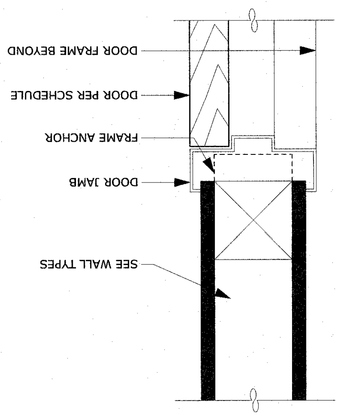


## 17 EXT. ALUM. WINDOW SILL

SCALE: 3" = 1'-0"

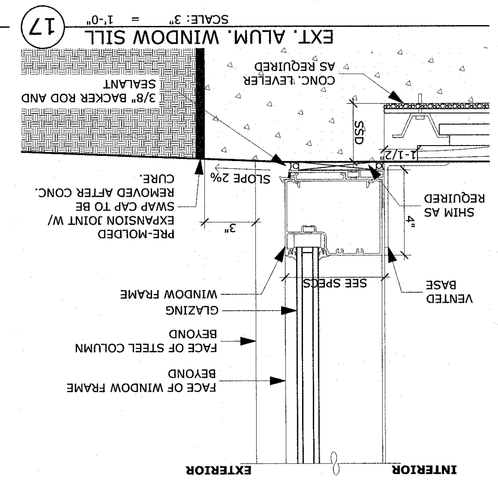


## 12 EXT. ALUM. WINDOW JAMB

SCALE: 3" = 1'-0"

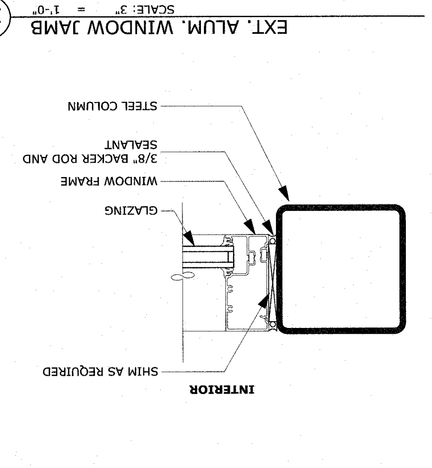


## 7 WOOD FLR. TO CONC. INT. THRESHOLD

SCALE: 3" = 1'-0"

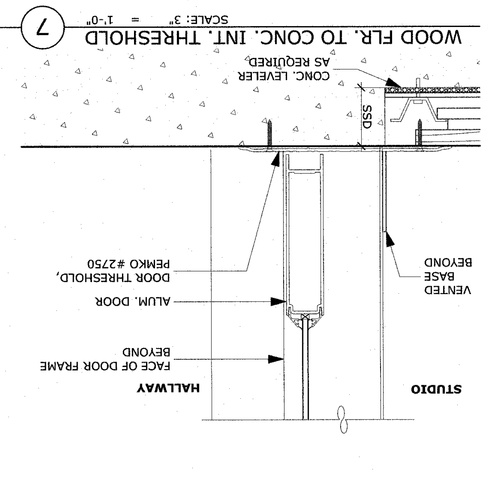


## 2 ALUM. DOOR JAMB AT SIDE LIGHT

SCALE: 3" = 1'-0"

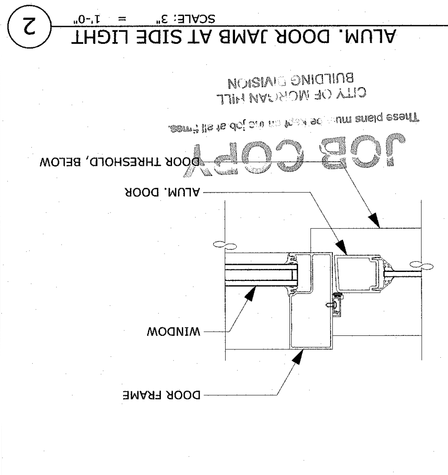


JOB COPY
This plans rec'd on file at the CITY OF MORGAN HILL BUILDING DIVISION

## 18 EXT. ALUM. WINDOW HEAD & SILL

SCALE: 3" = 1'-0"

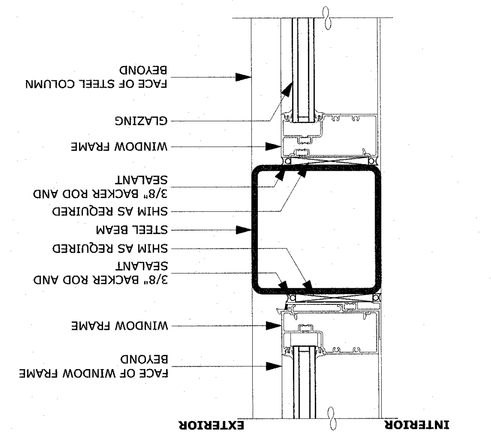


## 13 INT. ALUM. DOOR JAMB

SCALE: 3" = 1'-0"

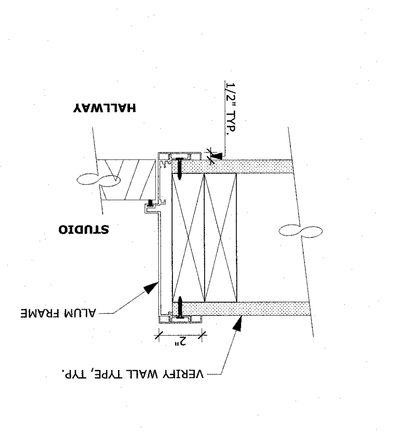


## 8 EXT. THRESHOLD

SCALE: 3" = 1'-0"

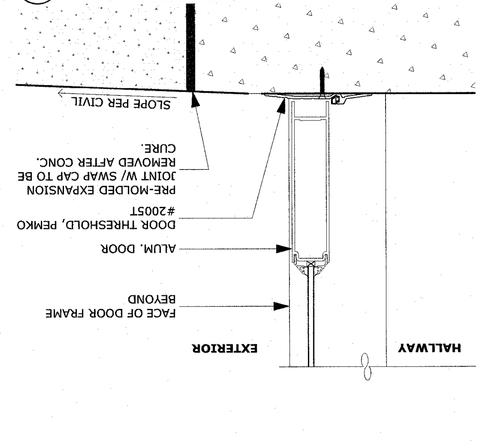


## 3 ALUM. WINDOW VERT./HORIZ. MULLION

SCALE: 3" = 1'-0"

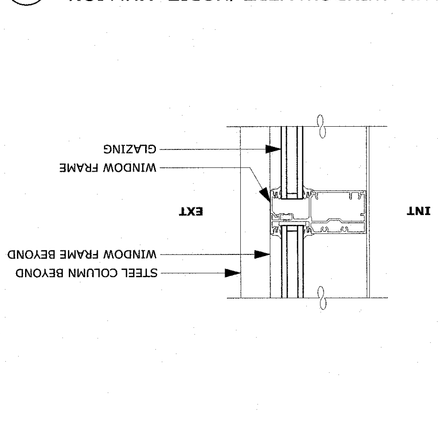


## 19 ALUM. DOOR HEAD @ TRANSOM

SCALE: 3" = 1'-0"

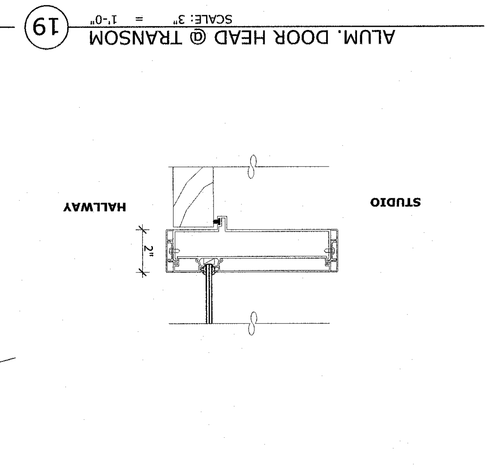


## 14 EXT. ALUM. WINDOW HEAD

SCALE: 3" = 1'-0"

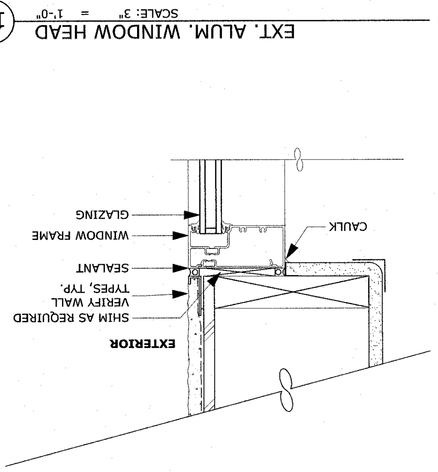


## 9 EXT. ALUM. DOOR THRESHOLD

SCALE: 3" = 1'-0"

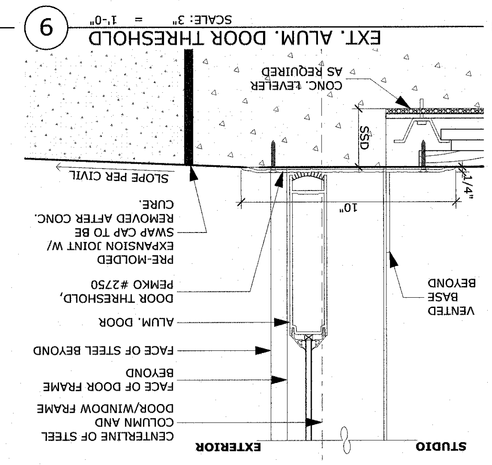


## 4 ALUM. DOOR JAMB

SCALE: 3" = 1'-0"

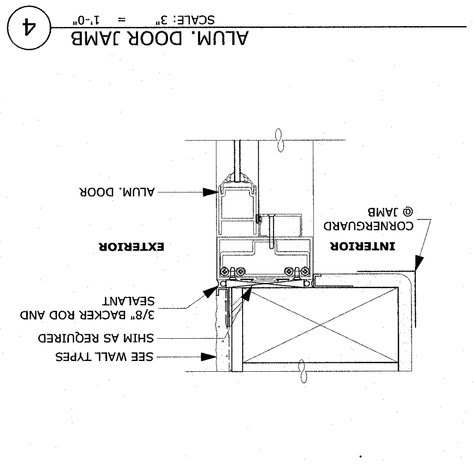


## 20 90 MIN. RATED ALUM FRAME

NOT TO SCALE

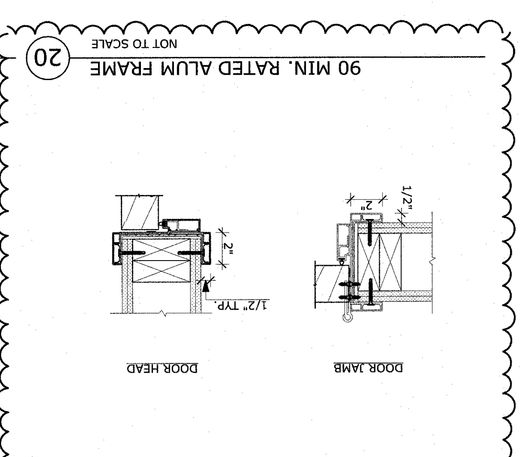


## 15 EXT. ALUM. DOOR HEAD

SCALE: 3" = 1'-0"

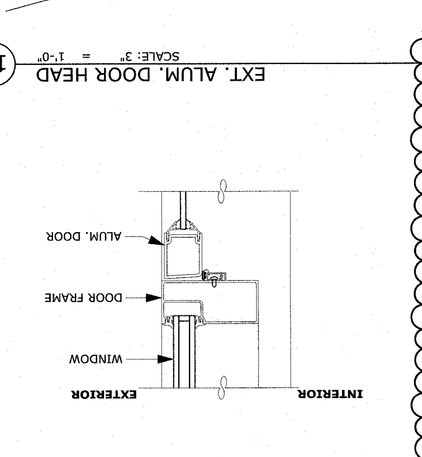


## 10 ALUM. WINDOW HEAD @ I-BEAM

SCALE: 3" = 1'-0"

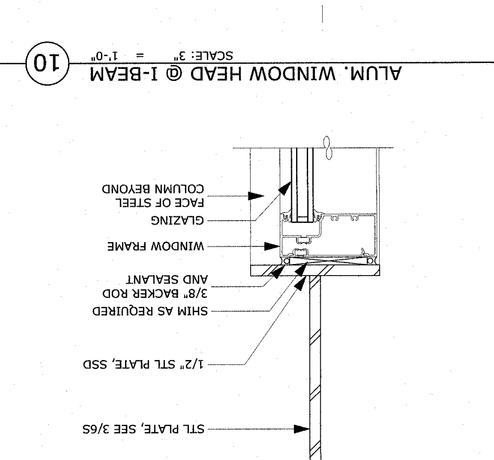


## 5 EXT. ALUM. DOOR JAMB

SCALE: 3" = 1'-0"

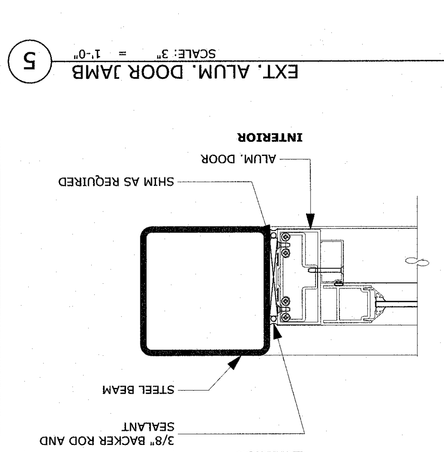

PLASTER REVEAL (12)
SCALE: 6" = 1'-0"

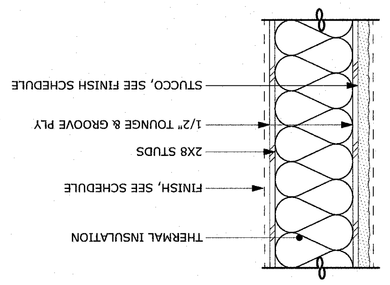


EXT WALL (G)
SCALE: 1 1/2"= 1'-0"

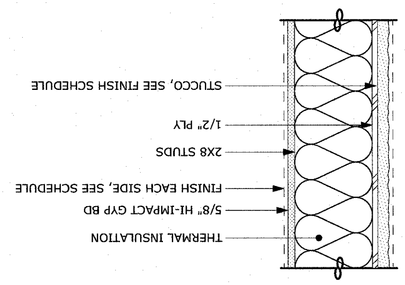


EXT WALL @ ARCH (B)
SCALE: 1 1/2"= 1'-0"

JOB COPY
CITY OF MORGAN HILL
BUILDING DIVISION
These plans may be used only at the site named.

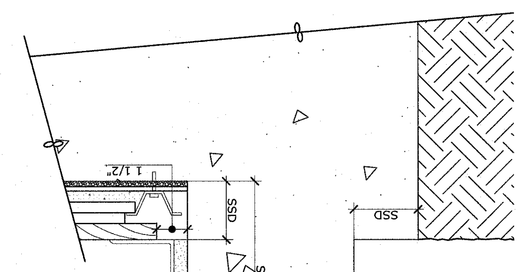


CURB @ STUCCO & MIRROR (8)
SCALE: 3" = 1'-0"

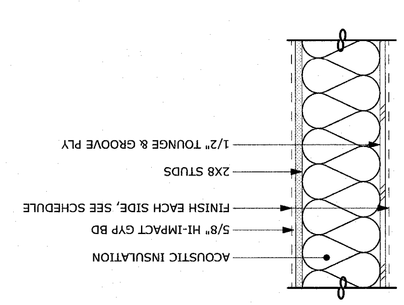


INT SHEAR WALL (C)
SCALE: 1 1/2"= 1'-0"

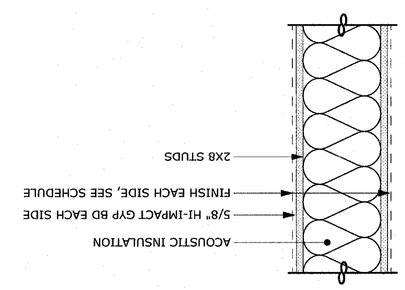


INT WALL (D)
SCALE: 1 1/2"= 1'-0"

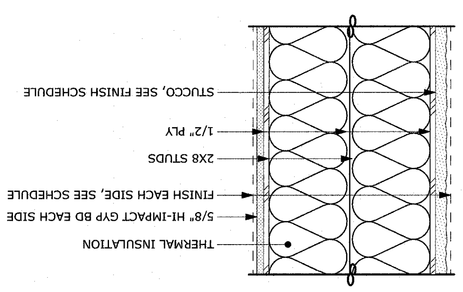


EXT DOUBLE WALL (E)
SCALE: 1 1/2"= 1'-0"

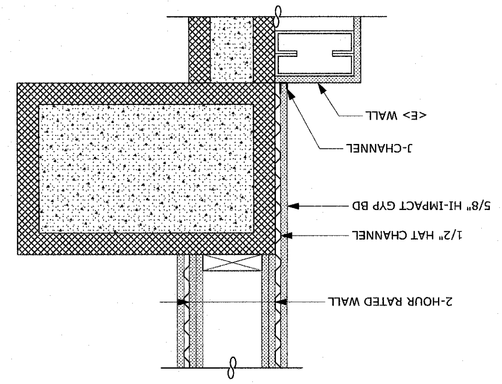


WALL DETAIL @ EXISTING HALLWAY (11)
SCALE: 1 1/2"= 1'-0"

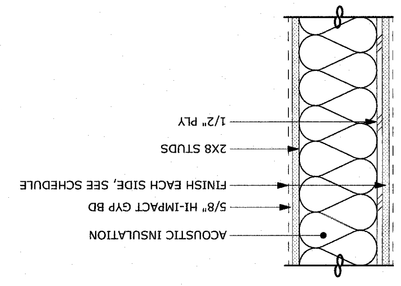


INT SHEAR WALL (F)
SCALE: 1 1/2"= 1'-0"




WALL DETAIL @ EXISTING HALLWAY (16)
SCALE: 1 1/2"= 1'-0"

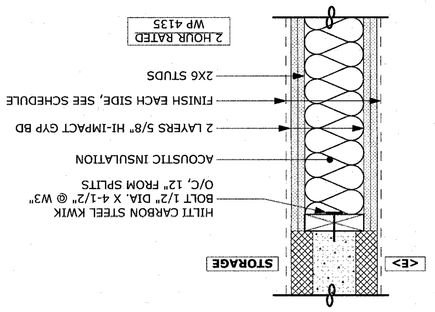


2 HOUR WALL INFILL (A)
SCALE: 1 1/2"= 1'-0"

# WALL TYPES & DETAILS

CENTENNIAL RECREATION CENTER EXPANSION PROJECT

CITY OF MORGAN HILL
171 W. EDMUNDSON AVE, MORGAN HILL, CA 95037

These drawings are instruments of service and are the property of WESTON MILES ARCHITECTS, INC. As designs and other information on the drawings are for use on the referenced design project only, and may not be used for other projects or additions to this project without the written consent of WESTON MILES ARCHITECTS, INC. Written dimensions on these drawings shall have precedence over scaled dimensions. Contractors shall verify and be responsible for all dimensions and conditions on the job and report any discrepancies before beginning work. Details shall be applied to similar conditions. Details not necessarily complete without specifications.
© Copyright 2018

| | |
|---|---|
| DATE: | 11/9/2018 |
| JOB NO: | 18001 |

A7.1

WESTON MILES
ARCHITECTS
17500 Depot Street, Suite #200
Morgan Hill, CA 95037
t • 408 • 779 • 6686
• Architecture • Landscape •

REGISTERED ARCHITECT
JAMES E. WESTON
No. 4-21-19
STATE OF CALIFORNIA

NOT VALID WITHOUT SIGNATURE

REVISIONS
1 01/30/2019 PLAN CHECK #1
2
3

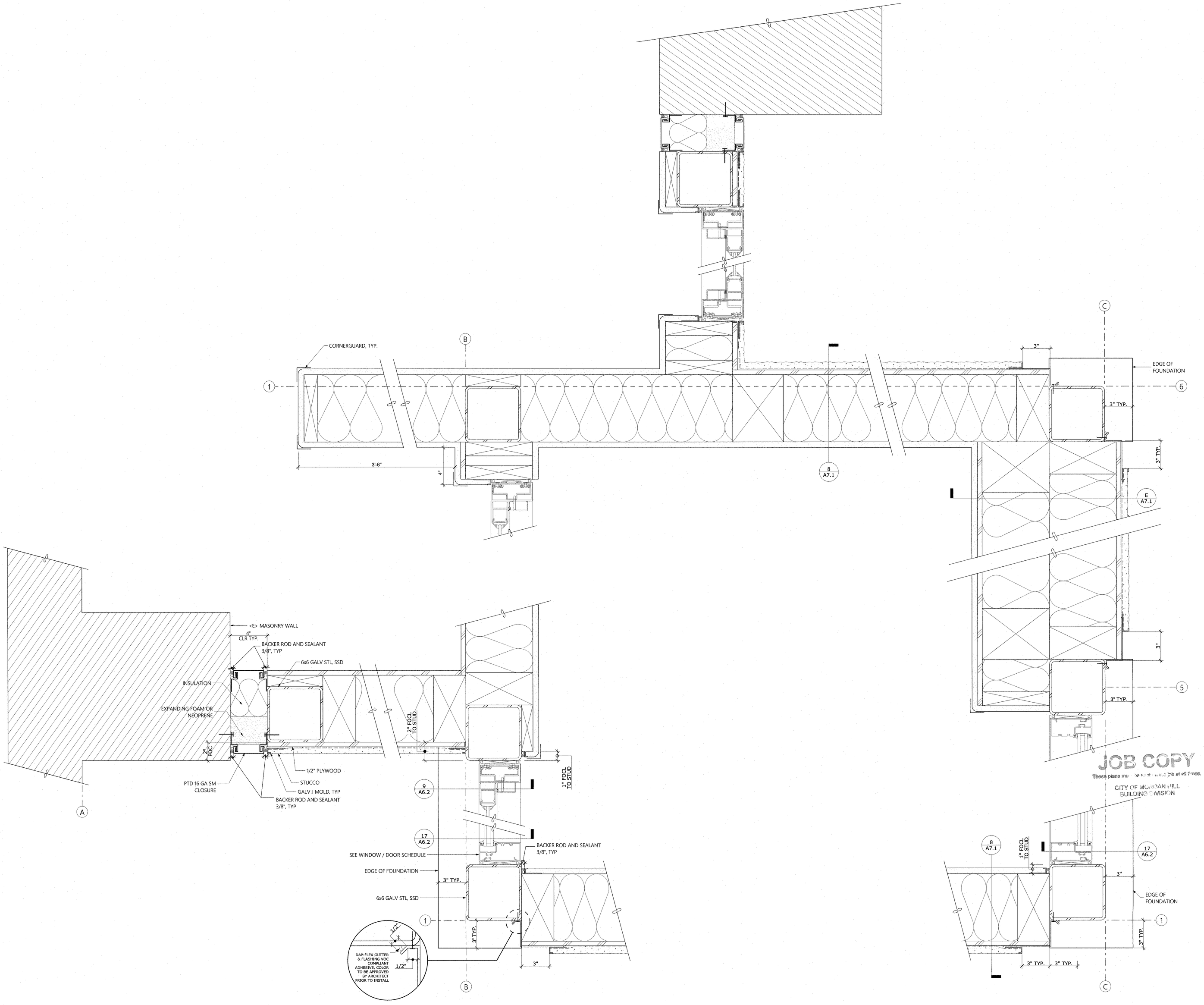


PARTIAL ENLARGED PLAN (1)
SCALE: 3" = 1'-0"


WESTON MILES
ARCHITECTS
17500 Depot Street, Suite #200
Morgan Hill, CA 95037
1 • 408 • 779 • 6686
• Architecture • Landscape •


NOT VALID WITHOUT SIGNATURE

REVISIONS
1 01/30/2019 PLAN CHECK #1
2
3

# WALL DETAILS

CENTENNIAL RECREATION CENTER EXPANSION PROJECT

CITY OF MORGAN HILL
171 W EDMUNDSON AVE, MORGAN HILL, CA 95037


These drawings are instruments of service and are the property of WESTON MILES ARCHITECTS, INC. All designs and other information on the drawings are for use on the specified project only and shall not be reproduced without the expressed written permission of WESTON MILES ARCHITECTS, INC.

Written dimensions on these drawings shall have precedence over scaled dimensions. Contractors shall verify and be responsible for all dimensions and conditions on the job and this office shall be notified of any variations from the dimensions and conditions shown by these drawings. Shop details must be submitted to this office for approval before proceeding with fabrication.

© Copyrighted 2018


DATE: 11/9/2018

JOB NO: 18001

A7.2

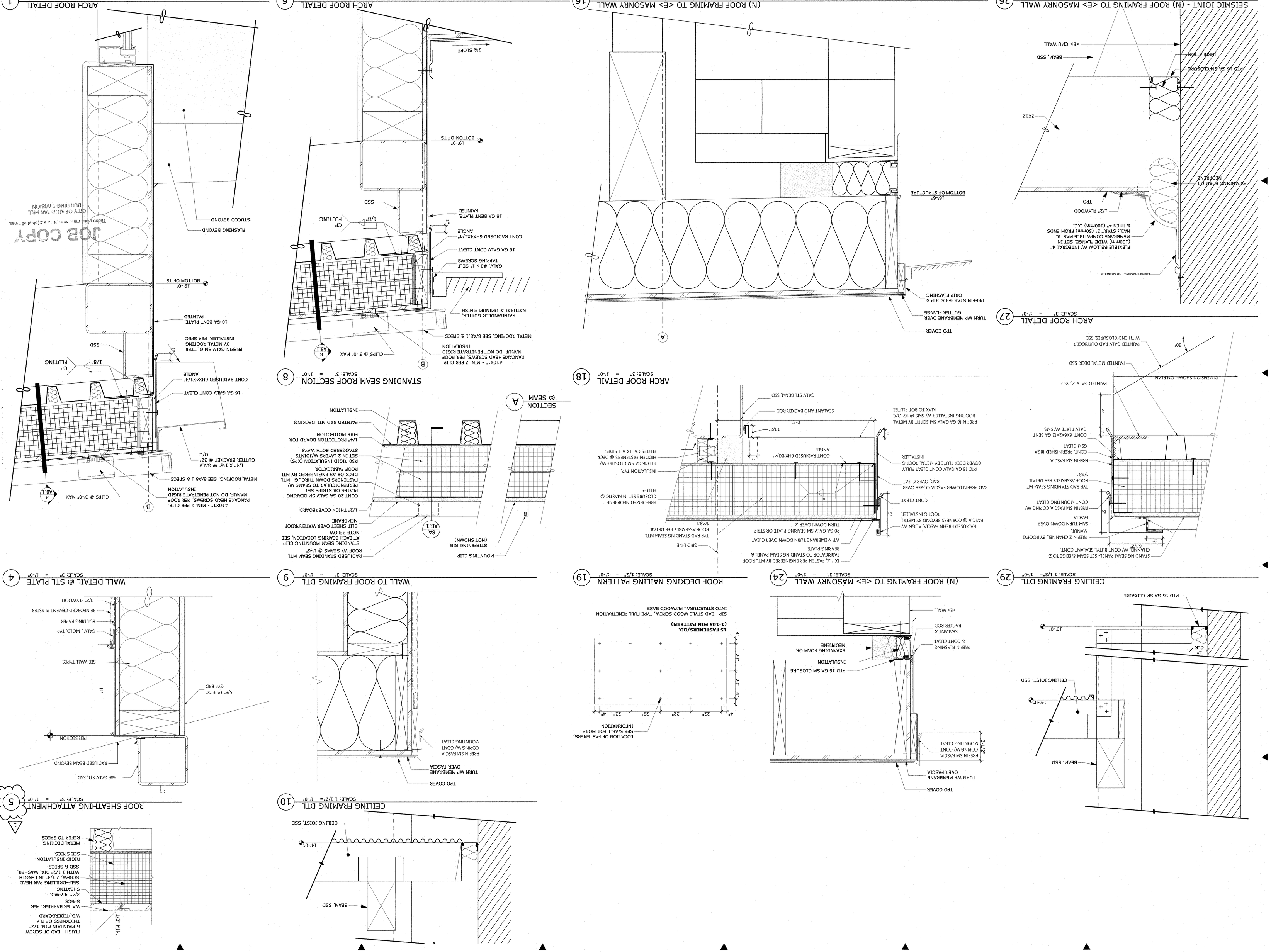


REVISIONS
1 01/30/2019 PLAN CHECK #1
2
3

# ROOF DETAILS

## CENTENNIAL RECREATION CENTER EXPANSION PROJECT

CITY OF MORGAN HILL
171 W EDMUNDSON AVE, MORGAN HILL, CA 95037

These drawings are instruments of service and are the property of WESTON MILES ARCHITECTS, Inc. to designs and other information on the drawings are the sole property of WESTON MILES ARCHITECTS INC.

Written dimensions on these drawings have precedence over scale dimensions. Contractors must verify and be responsible for all dimensions. No changes can be made without written permission of WESTON MILES ARCHITECTS INC.

© Copyright 2018

DATE: 11/9/2018
JOB NO: 18001

# A8.1

WESTON MILES ARCHITECTS
17500 Depot Street, Suite #200
Morgan Hill, CA 95037
T • 408 • 779 • 6686
• Architecture • Landscape •

**NOTE:**

1. PROVIDE DOOR IDENTIFICATION SIGNAGE ON WALL ADJACENT TO THE LATCH SIDE OF THE DOOR W/BRAILLE 11B-703.3, PROPORTIONS 11B-703.2.4, CONTRAST (NON-RAISED CHARACTERS) 11B-703.5.1, RAISED CHARACTERS 11B-703.2 AND PICTOGRAMS 11B-703.6
2. INSTALLATION HEIGHT AND LOCATION PER 11B703.4, SEE DETAIL 5/A9.1, U.N.O. WHERE THERE IS NO WALL SPACE ON THE LATCH SIDE INCLUDING DOUBLE LEAF DOORS, SIGNS SHALL BE PLACED ON THE NEAREST ADJACENT WALL, PREFERABLY ON THE RIGHT.
3. RAISED CHARACTERS - SHALL COMPLY WITH 11B-703.2 AND SHALL BE DUPLICATED IN BRAILLE COMPLYING WITH 11B-703.3. CHARACTER HEIGHT 5/8" MIN TO 2' MAX. RAISED 1/32" ABOVE BACKGROUND, UPPERCASE, SANS SERIF. CHARACTERS CANNOT BE ITALIC, OBLIQUE, SCRIPT, HIGHLY DECORATIVE, OR OTHER UNUSUAL FORMS.
4. BRAILLE SPECIFICATION PER 11B-703.3:
   TO BE CALIFORNIA CONTRACTED GRADE 2 BRAILLE SHALL BE USED WHERE BRAILLE SYMBOLS ARE SPECIFICALLY REQUIRED IN OTHER PORTION OF THESE STANDARDS. DOTS SHALL BE 1/10 IN (2.5mm) ON CENTER IN SAME CELL, W/ 3/10 IN. (7.6mm) SPACE BETWEEN CORRESPONDING DOTS IN ADJACENT CELL. DOTS SHALL BE RAISED A 0.025" (0.6mm) TO 0.037" (0.9mm) ABOVE THE BACKGROUND. DOMES SHALL BE DOMED OR ROUNDED.
5. ALL SIGNS TO BE 1/4" THK. ACRYLIC PLASTIC.
6. ANCHOR SIGN TO WALL W/EXPOSED TAMPER RESISTANT SCREWS.
7. SEE SPECIFICATIONS FOR SIGN TYPE AND LOCATION.
8. ALL CHARACTERS AND BACKGROUNDS OF ALL SIGNS SHALL HAVE A NON-GLARE FINISH.
9. CHARACTERS ON ALL SIGNS SHALL CONTRAST 70% W/THEIR BACKGROUND.
10. SIGNS TO HAVE COLOR WHICH CONTRASTS W/SURFACE TO WHICH THEY ARE MOUNTED.
11. FOR SIGNAGE MOUNTING HEIGHTS SEE DETAIL 5/A9.1
12. ROOM IDENTIFICATION TEXT TO BE APPROVED BY OWNER PRIOR TO MAKING OF SIGNS.

SIGNAGE NOTES (5)
SCALE: 1 1/2" = 1'-0"

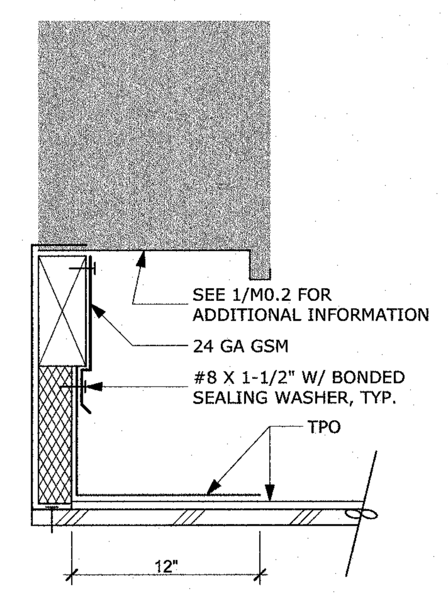


MECH CURB DETAIL (20)
SCALE: 3" = 1'-0"

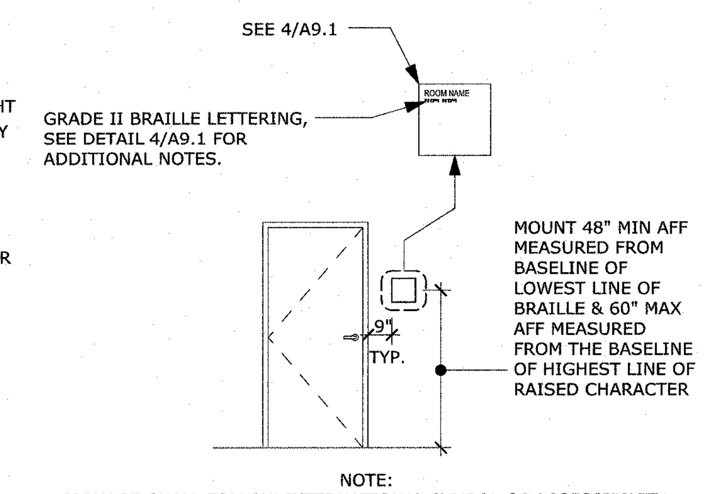


NOTE:
SIGNAGE SHALL FOLLOW INTERNATIONAL SYMBOL OF ACCESSIBILITY, TITLE 24, 2013 CALIFORNIA BUILDING CODE, 11B-703.7.2.1.

GENERAL DOOR SIGNAGE (5)
SCALE: 1/4" = 1'-0"

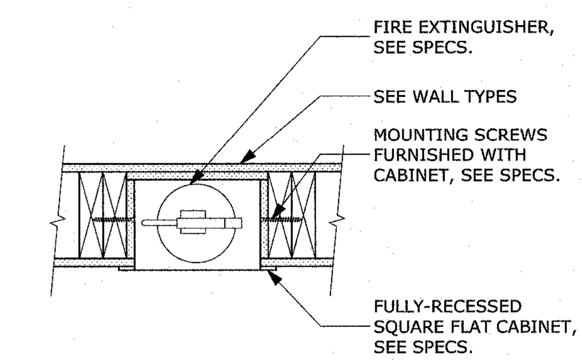


FULLY-ACCESSED FIRE EXT. CAB. (19)
SCALE: 1 1/2" = 1'-0"

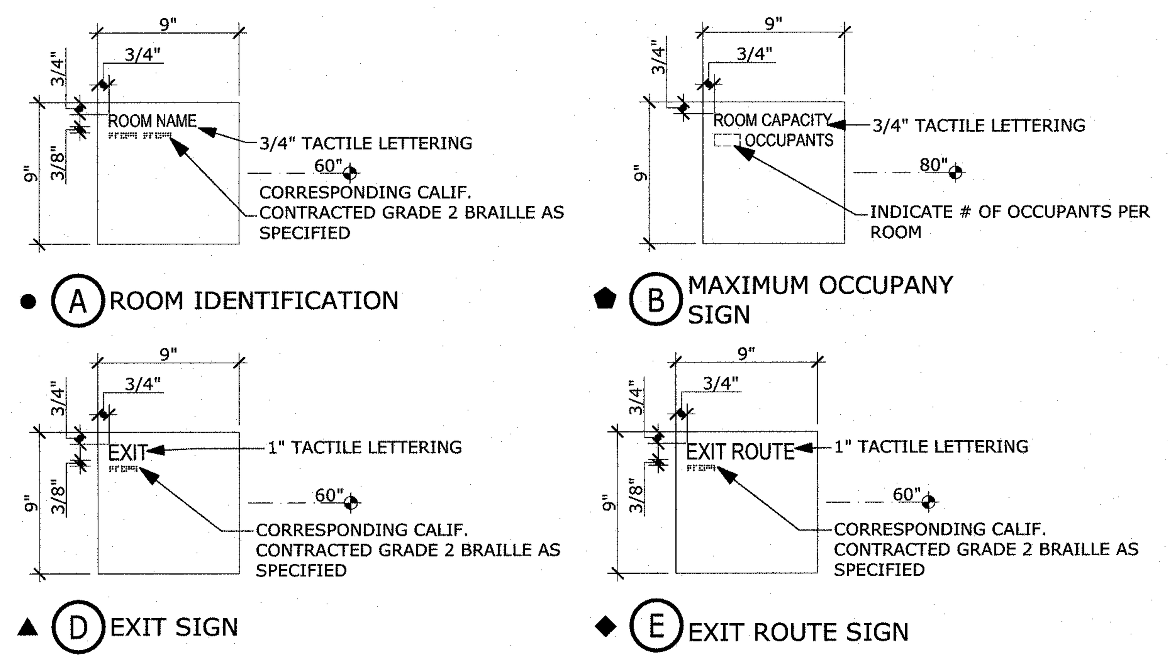


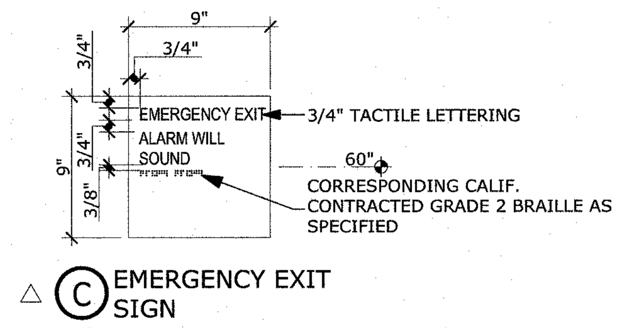


NOTES:
1. ALL SIGNS 9" X 9" X 1/8" THICK MP PLASTIC (MELAMINE/PHOTOPOLYMER) ONE PIECE, NON GLARE SURFACE, 1/32" RAISED COPY, GRADE 2 BRAILLE, IN COMPLIANCE WITH ADA REQUIREMENTS
2. BACKGROUND COLOR: MATCH EXISTING
3. FONT: HELVETICA MEDIUM
4. MOUNTING ON WALL (WHERE APPLIES): VHB TAPE AND SILICONE TO WALL
5. MOUNTING ON GLASS (WHERE APPLIES): PROVIDE A PANEL TO CONCEAL ATTACHMENTS

GENERAL SIGNAGE (4)
SCALE: 1 1/2" = 1'-0"

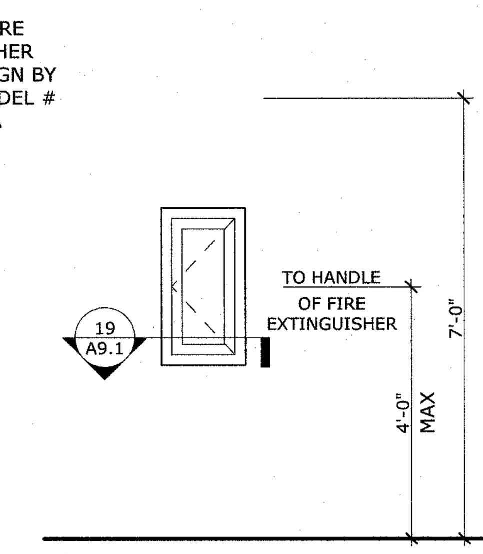


NOTE:
HANDLE TO BE U-SHAPED WIRE PULL OR SIMILAR.
SEE 6/W9 FOR FIRE RATED WALLS

EXTINGUISHER CABINET (18)
SCALE: 1/2" = 1'-0"

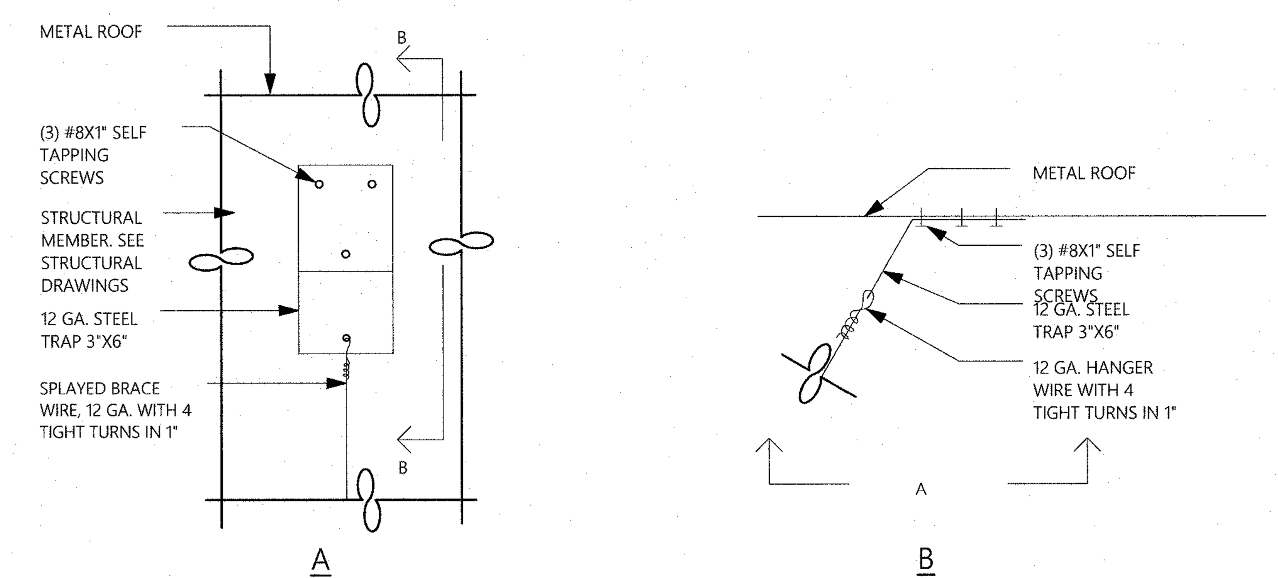


FAN TIE DETAIL (8)
SCALE: 3" = 1'-0"

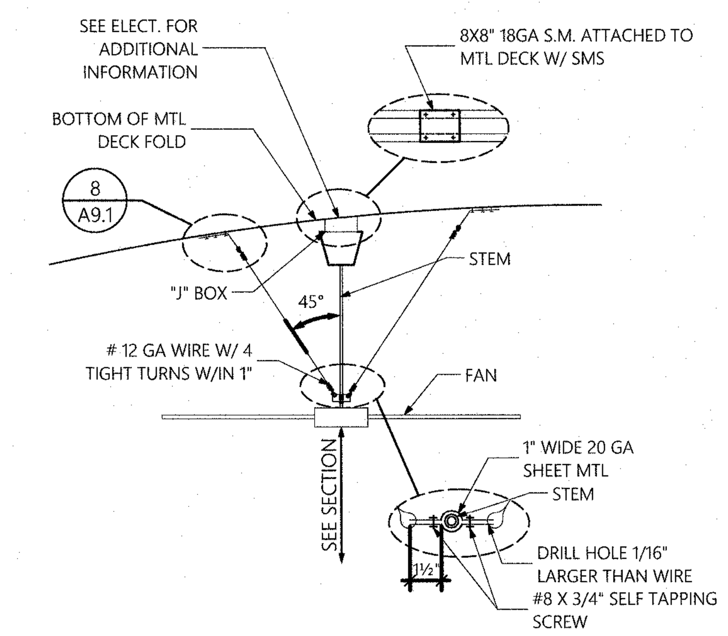


FAN DETAIL (3)
SCALE: 3/16" = 1'-0"

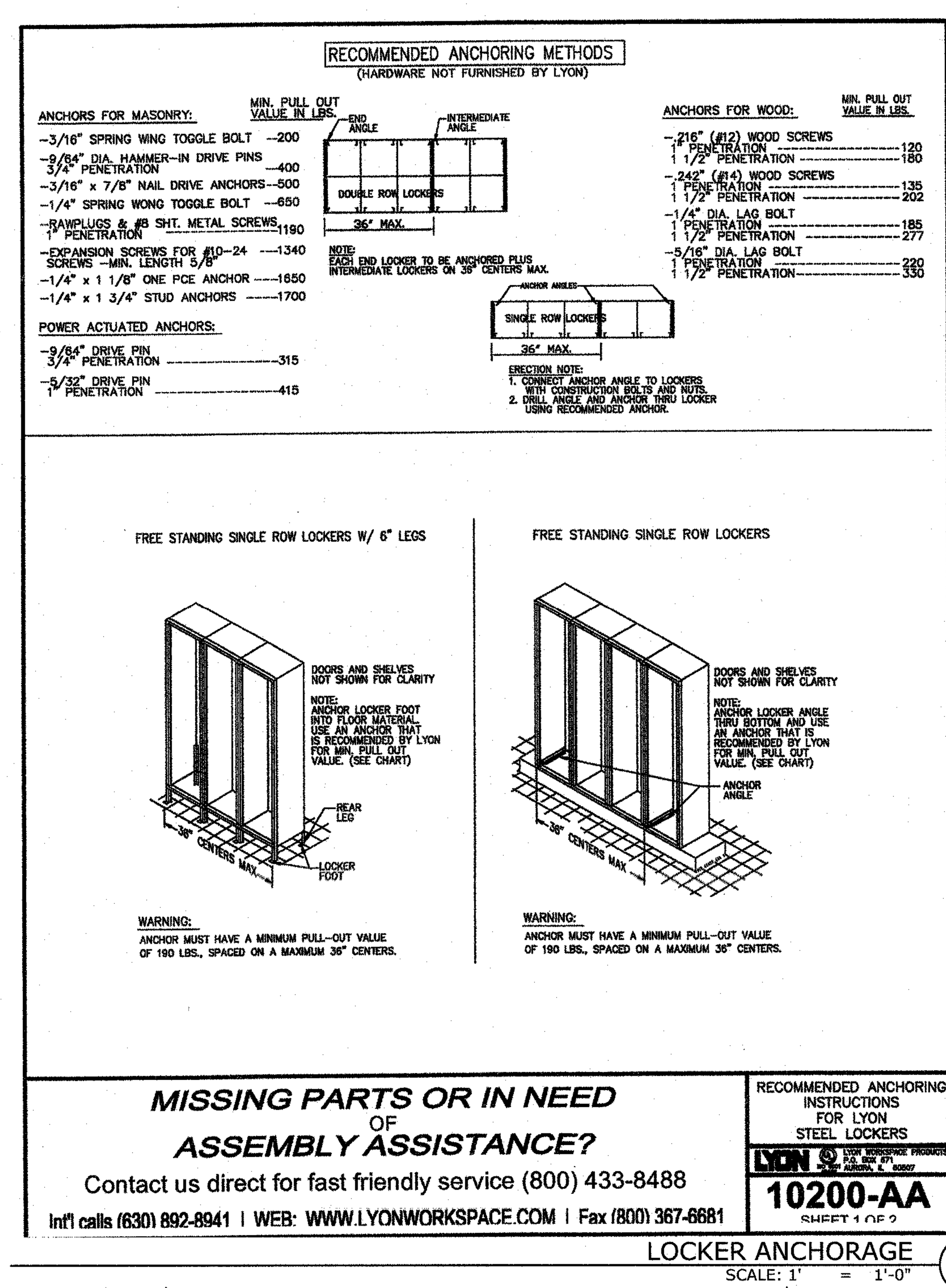


LOCKER ANCHORAGE (16)
SCALE: 1' = 1'-0"

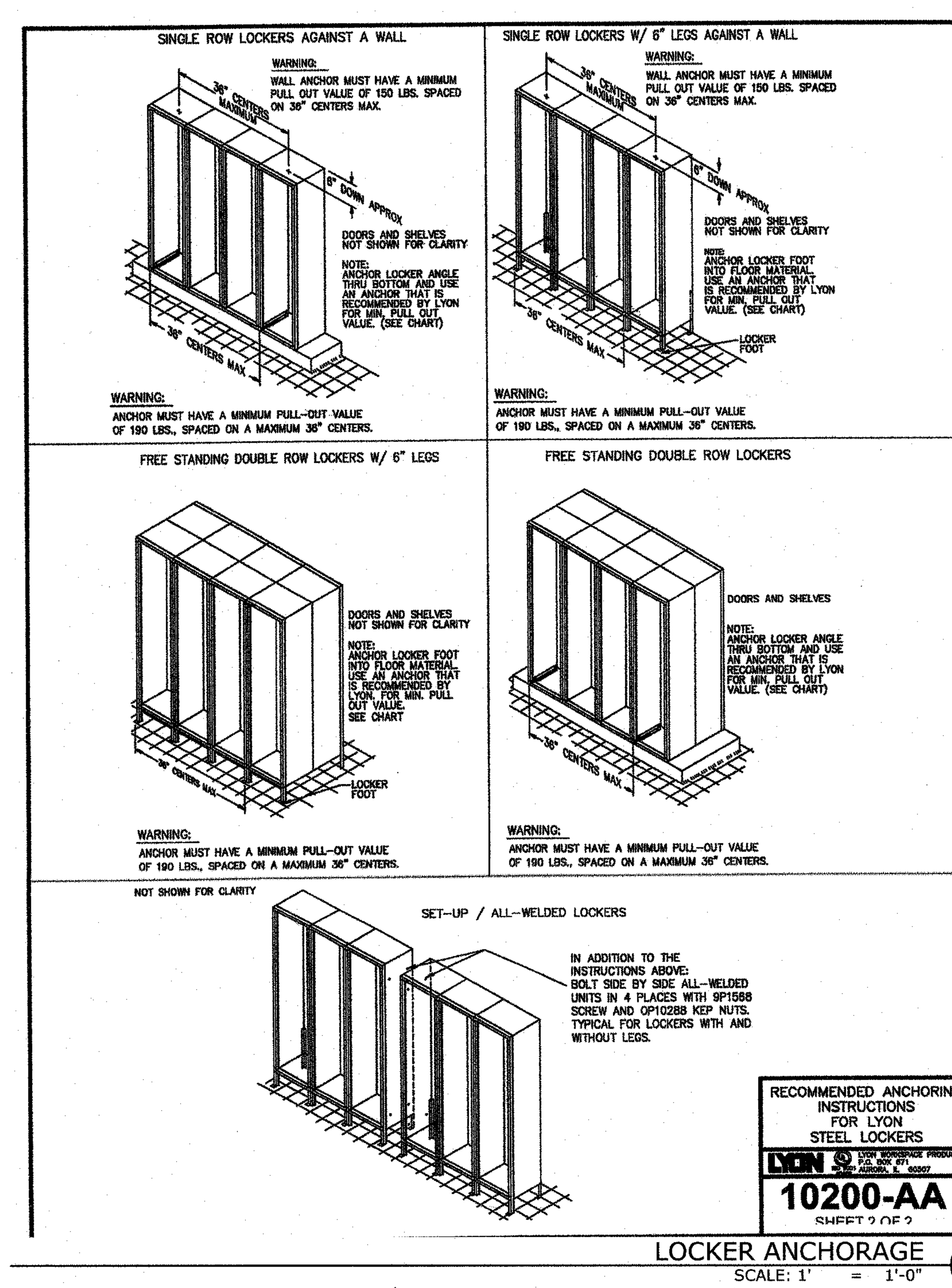


LOCKER ANCHORAGE (11)
SCALE: 1' = 1'-0"

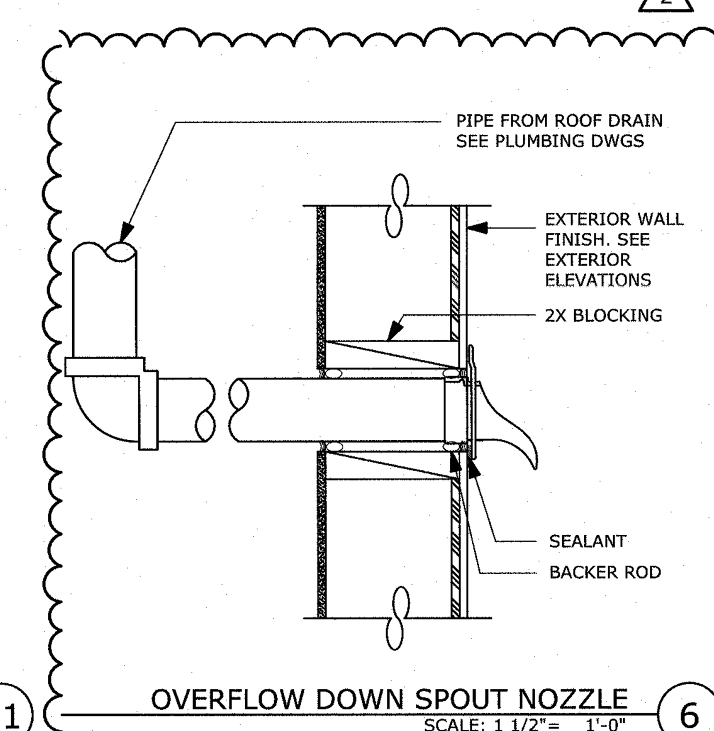


OVERFLOW DOWN SPOUT NOZZLE (6)
SCALE: 1 1/2" = 1'-0"

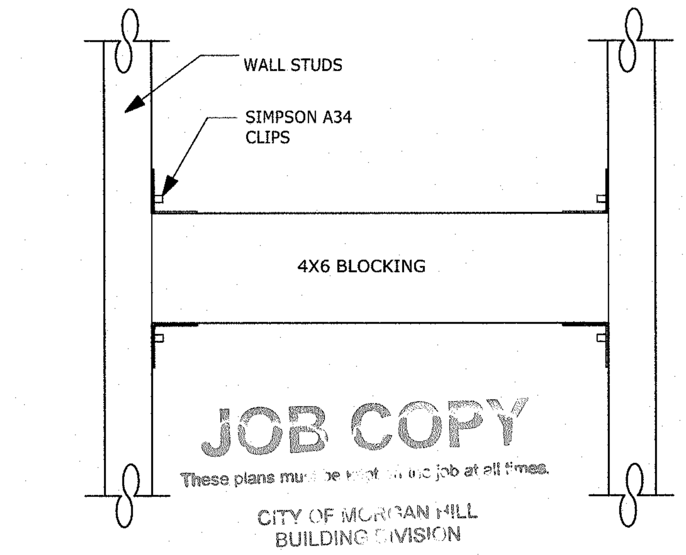


BACKING STRIP WOOD (2)
SCALE: 3" = 1'-0"

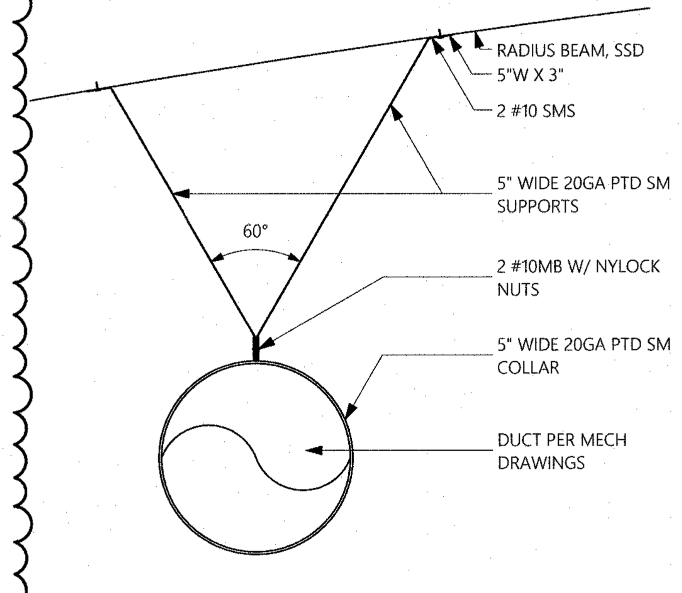


MECH SUSPENSION DETAIL (1)
SCALE: 3/4" = 1'-0"


WESTON MILES
ARCHITECTS
17500 Depot Street, Suite #200
Morgan Hill, CA 95037
1 • 408 • 779 • 6686
• Architecture • Landscape •


NOT VALID WITHOUT SIGNATURE

REVISIONS
1 01/30/2019 PLAN CHECK #1
2 03/27/2019 PLAN CHECK #2
3

# MISC DETAILS

## CENTENNIAL RECREATION CENTER EXPANSION PROJECT

CITY OF MORGAN HILL
171 W EDMUNDSON AVE, MORGAN HILL, CA 95037


These drawings are instruments of service and are the property of WESTON MILES ARCHITECTS, INC. All designs and other information on the drawings are for use on the specified project and shall not be used otherwise without the expressed written permission of WESTON MILES ARCHITECTS, INC.

Written dimensions on these drawings shall have precedence over scaled dimensions. Contractors shall verify and be responsible for all dimensions and conditions on the job and this office shall be notified of any variations from the dimensions and conditions shown by these drawings. Shop details shall be submitted to this office for approval before proceeding with fabrication.

© Copyrighted 2018


DATE: 11/9/2018
JOB NO: 18001

A9.1

## GENERAL CONDITIONS

1. GENERAL CONTRACTOR SHALL VISIT THE BUILDING SITE AND SHALL VERIFY ALL CONDITIONS AND DIMENSIONS PRIOR TO STARTING ANY WORK AND SHALL BE RESPONSIBLE FOR COORDINATION OF ALL WORK AND MATERAILS, INCLUDING THOSE FURNISHED BY SUB-CONTRACTORS. ENGINEERS SHALL BE NOTIFIED IMMEDIATELY OF ANY DISCREPANCIES.
2. ALL ASTM, ACI, AND AISC DESIGNATIONS SHALL BE AMENED TO MOST RECENT DATE, UNLESS NOTED OTHERWISE.
3. GENERAL DETAILS ON THIS SHEET SHALL BE USED WHERE APPLICABLE, UNLESS OTHERWISE NOTED.
4. ALL OMISSIONS OR CONFLICTS BETWEEN VARIOUS ELEMENTS OF THE WORKING DRAWINGS AND/OR SPECIFICATIONS SHALL BE BROUGHT TO THE ATTENTION OF THE ENGINEER BEFORE PROCEEDING WITH ANY WORK IN QUESTION.
5. THE CONTRACT DRAWINGS AND SPECIFICATIONS REPRESENT THE FINISHED STRUCTURE. THEY DO NOT INDICATE THE METHOD OF CONTRUCTION. THE CONTRACTOR SHALL PROVIDE ALL MEASURES NECESSARY TO PROTECT THE STRUCTURE, WORKERS AND PEDESTRIANS DURING CONSTRUCTION. SUCH MEASURES SHALL INCLUDE, BUT NOT BE LIMITED TO BRACING, SHORING FOR LOADS DUE TO CONTRUCTION EQUIPMENT, TEMPORARY STRUCTURES, AND PARTIALLY COMPLETED WORK, ETC. OBSERVATION VISITS TO THE SITE BY THE ARCHITECT/ENGINEER SHALL NOT INCLUDE INSPECTION OF SUCH ITEMS.
6. ALL CONTRUCTION SHALL BE IN ACCORDANCE WITH THE CURRENT 2016 CBC AND ALL LOCAL CODE REQUIREMENTS.
7. IN NO CASE SHALL WORKING DIMENSIONS BE SCALED FROM PLANS, SECTIONS OR DETAILS ON THE STRUCTURAL DRAWINGS.
8. REFER TO ARCHITECTURAL, MECHANICAL, AND ELECTRICAL DRAWINGS FOR MOULDS, ORNAMENTS, GROOVES, CUPS, GROUNDS, DROPPED SLABS, CURBS, ETC., OR ANY OTHER ITEMS NOT SHOWN ON STRUCTURAL DRAWINGS.
9. NOTES, DETAILS, AND DRAWINGS SHALL TAKE PRECEDENCE OVER GENERAL NOTES.
10. NO PIPES, DUCTS, SLEEVES, CHASES, ETC. SHALL BE PLACED IN SLABS, BEAMS, OR WALLS UNLESS SPECIFICALLY SHOWN OR NOTED, NOR SHALL ANY STRUCTURAL MEMBER BE CUT FOR PIPES, DUCTS, ETC. UNLESS OTHERWISE NOTED. CONTRACTOR SHALL OBTAIN PRIOR APPROVAL FOR INSTALLATION OF ANY ADDITIONAL PIPES, DUCTS, ETC.
11. CONTRACTOR AGREES THAT HE SHALL ASSUME SOLE AND COMPLETE RESPONSIBILITY FOR JOB SITE CONDITIONS DURING THE COURSE OF CONTRUCTION OF THIS PROJECT INCLUDING THE SAFETY OF ALL PERSONS AND PROPERTY: THAT THIS REQUIREMENT SHALL APPLY CONTINUOUSLY AND NOT BE LIMITED TO NORMAL WORKING HOURS; AND THAT THE CONTRACTOR SHALL DEFEND, INDEMNIFY AND HOLD THE CLIENT AND THE ARCHITECT/ENGINEER HARMLESS FROM AND ALL LIABILITY, REAL OR ALLEGED, IN CONNECTION WITH THE PERFORMANCE OF WORK ON THIS PROJECT, EXCEPT FOR LIABILITY ARISING FROM THE SOLE NEGLIGENCE OF THE CLIENT OR THE ARCHITECT/ENGINEER.
12. THE STRUCTURAL SYSTEMS HAVE BEEN DESIGNED TO CARRY THE SUPERIMPOSED LIVE LOADS AS PRESCRIBED BY THE BUILDING CODE AND IN ACCORDANCE WITH STANDARD ENGINEERING PRACTICES, WITH NO SPECIAL PROVISIONS FOR CARRYING CONCENTRATED LOADS FROM STORAGE AND HANDLING OF CONSTRUCTION N MATERIALS OR FROM OPERATION OF CONSTRUCTION EQUIPMENT. THE CONTRACTOR SHALL PROVIDE ALL SCAFFOLDING, BRACING, AND SHORING SYSTEMS AS REQUIRED FOR INSTALLATION, STABILITY, AND SAFETY OF NEW WORK AND PROVIDE PROTECTION AS REQUIRED FOR THE SAFETY OF PEDESTRIANS AND JOBSITE PERSONNEL. AT ALL TIMES, THE CONTRACTOR SHALL BE SOLELY AND COMPLETELY RESPONSIBLE FOR THE CONDITIONS OF THE JOBSITE INCLUDING SAFETY OF PERSONS AND PROPERTY. THE CONTRACTOR SHALL PROTECT NEW AND EXISTING CONSTRUCTION AND MATERIALS FROM ADVERSE CONDITIONS AND DAMAGE.
13. SHOULD ANY CONDITION ARISE WHERE THE INTENT OF THE DRAWINGS IS IN DOUBT OR WHERE THERE APPEARS TO BE AN ERROR ON THE DRAWINGS OR DISCREPANCY BETWEEN THE DRAWINGS AND FIELD CONDITION, THE ENGINEER SHALL BE NOTIFIED AS SOON AS POSSIBLE FOR A PROCEDURE TO BE FOLLOWED. IF THE CONTRACTOR PROCEEDS WITH THE WORK AFFECTED WITHOUT INSTRUCTIONS FROM THE ENGINEER, THE CONTRACTOR SHALL MAKE GOOD ANY RESULTING DAMAGE OR DEFECTS. THIS INCLUDES TYPOGRAPHICAL ERRORS IN THE SPECIFICATIONS AND ERRORS ON THE DRAWINGS.
14. THE CONTRACTOR AND EACH SUBCONTRACTOR SHALL CAREFULLY EXAMINE THE CONDITIONS AFFECTING HIS WORK BEFORE PROCEEDING AND SHALL REPORT TO THE ENGINEER ANY CONDITION WHICH WOULD PREVENT THE PROPER AND LEGAL COMPLETION OF HIS WORK. NOT REPORTING ANY SUCH UNSUITABLE CONDITION WILL CONSTITUTE ACCEPTANCE OF ALL CONDITIONS BY THE CONTRACTOR OR SUBCONTRACTOR.
13. THESE NOTES SHALL BE CONSIDERED A PART OF OF THE WRITTEN SPECIFICATIONS.
14. DESIGN CODES REFERENCES: 2016 CALIFORNIA BUILDING CODE
2016 CALIFORNIA RESIDENTIAL CODE
2016 CITY OF MORGAN HILL

| VERTICAL LOAD | |
|---|---|
| ROOF | CEIL'G |
| LL= 20 PSF | LL= 10 PSF |
| FLOOR | |
| LL= 40 PSF | |

| WIND DESIGN PARAMETERS (ASCE 7-10) | | | | | | | | | |
|---|---|---|---|---|---|---|---|---|---|
| (DIRECTIONAL PROCEDURE – ALL HEIGHTS) | | | | | | | | | |
| RISK CAT. | EXPOSURE | V | $K_d$ | $K_{zt}$ | $K_z$ | $K_{z(roof)}$ | $G_f$ | $C_p$ | $GC_{pi}$ |
| II | C | 110 MPH | 0.85 | 1.0 | 0.85 | 0.85 | 0.85 | 0.8 | ±0.18 |

| SEISMIC PARAMETERS (ASCE 7-10) | | | | | | | | | | |
|---|---|---|---|---|---|---|---|---|---|---|
| BUILDING PARAMETERS | | | | | SITE PARAMETERS | | | SEISMIC COEFFICIENTS | | |
| OCC | R | I | $\Omega_o$ | Cd | SITE CLASS | $S_S$ | $S_1$ | SDC | $S_{DS}$ | $S_{D1}$ |
| II | 6.5 | 1.0 | 2.5 | 4 | D | 1.510 | 0.600 | D | 1.000 | 0.600 |

## REINFORCING STEEL

1. ALL REINFORCING STEEL SHALL BE AS FOLLOWS:
   A. NO.4 BARS AND SMALLER-INTERMIDIATE GRADE CONFORMING TO A615-40
   B. NO.5 BARS AND LARGER- HARD GRADE CONFORMING TO A615-60
   C. ALL MASONRY WALL REINFORCING, INCLUDING MASONRY WALL FOOTINGS, SHALL BE INTERMEDIATE GRADE CONFORMING TO A615-60
   D. ALL BARS EXCEPT FOR NO.2 BARS SHALL BE DEFORMED AS PER ASTM A305
   E. WIRE MESH SHALL CONFORM TO ASTM A185
2. ALL BARS SHALL BE CLEAN OF RUST, GREASE OR OTHER MATERIALS LIKELY TO IMPAIR BOND.
3. ALL BENDS SHALL BE MADE COLD.
4. SPLICING OF BARS SHALL HAVE LAPPING OF 60 BAR DIAMETERS.
5. ALL REINFORCING BARS SHALL BE ACCURATELY AND SERCURELY PLACED BEFORE POURING CONCRETE OR APPLYING MORTAR OR GROUT.
6. WELDING OF REINFORCING STEEL SHALL BE PERFORMED BY THE ELECTRIC ARC PROCESS UTILIZING E70XX ELECTRODES, AND PERFORMED BY WELDERS CERIFIED BY THE CITY.
7. ALL WELDING TO BE DONE UNDER THE CONTINUOUS INSPECTION OF AN ASSIGNED SPECIAL INSPECTOR FOR THE PROJECT OR AS OTHERWISE REQUIRED BY THE ENGINEER OF RECORD (E.O.R.)
8. REINFORCING STEEL CAST AGAINST AND EXPOSED TO EARTH SHALL HAVE 3" OF CLEAR COVER UNLESS SPECIFICALLY DETAILED OTHERWISE.
9. REINFORCING STEEL SHALL CONFORM TO ASTM A615, GRADE 60, DEOFRMED UNLESS NOTED OTHERWISE. WELDED WIRE FABRIC SHALL CONFORM TO ASTM A165 WELDED STEEL WIRE FABRIC UNLESSNOTED OTHERWISE. SPLICES CLASS "B" AND ALL HOOKS SHALL BE STANDARD UNLESS NOTHE OTHERWISE.
10. A 3/4" CHAMFER SHALL BE PROVIDED AT ALL EXPOSED EDGES OF CONCRETE U.N.O. IN ACCORDANCE WITH ACI 301 SECTION 4.2.4.

## EPOXY AND ANCHORS

1. EPOXY GROUT USED FOR THE SETTING OR DEFORMED REINFORCING BARS SHALL BE SIMPSON"SET-XP" (ICC# ESR-2508) EPOXY. SURFACE OF EXISTING CONCRETE SHALL BE FREE FROM DUST OR DEBRIS PRIOR TO INJECTION. EPOXY PRODUCT TO BE INSTALLED IN ACCORDANCE WITH MANUFACTURER'S RECOMMENDATIONS.
2. EPOXY USED FOR THE SETTING OF ALL-THREAD ROD BOTLS SHALL BE SIMPSON "SET-XP" EPOXY ICC# (ESR-2508). EPOXY SHALL BE INSTALLED IN ACCORDANCE WITH MANUFACTURER'S RECOMMENDATIONS AND INSTALL PER ICBO ESR-1772. PROVIDE SPECIAL INSPECTION BY A CERTIFIED TESTING AGENCY.
3. SUBSTITUTIONS SHALL BE SUBMITED TO ENGINEER FOR APPROVAL PRIOR TO INSTALLATION.

## WASHER SCHEDULE

1. WASHERS SHALL BE USED UNDER HEADS AND NUTS OF ALL BOLTS BEARING ON WOOD.
2. THE WASHERS LISTED BELOW SHALL BE USED IN THE FOLLOWING LOCATIONS:
   A. SOLE PLATES TO FOUNDATIONS
   B. WOOD LEDGERS AND CAPS TO CONCRETE AND MASONRY WALLS.
   C. AGAINST THE 2X MEMBER WHEN 2X MEMBER IS BOLTED AGAINST A HEAVIER MEMBER.
   D. STANDARD CUT WASHERS MAY BE USED ELSEWHERE, UNLESS OTHERWISE NOTED ON THE DRAWING.

| BOLT SIZE | PLATE WASHER SIZE |
|---|---|
| 1/2" | 3.0"x3 1/4"x 1/4" THICK |

## CONCRETE

1. CEMENT: ASTM C150 TYPE 2. CEMENT SHALL BE OF SAME BRAND, TYPE AND SOURCE THROUGHOUT PROJECT. WHERE AGGREGATES ARE POTENTIALLY REACTIVE, USE LOW ALKALI CEMENT.
2. AGGREGATES: ASTM C33 AND C88 FROM SOURCES WITH PROVEN HISTORY OF SUCCESSFUL USE. SOURCE SHALL BE CONSTANT UNLESS 10 DAYS PRIOR NOTICE IS GIVEN FOR APPROVAL AFTER RECHECK OF MIX DESIGN.
   A. FINE AGGREGATE: FELTON OLYMPIA SAND, OR APPROVED EQUAL PRODUCT SHALL HAVE THE SAME OR BETTER SHRINKAGE CHARACTERISTICS AS FELTON OLYMPIA SAND.
   B. COARSE AGGREGATE: COARSE LIMESTONE OR GRANITE AGGREGATE, FROM SOURCES APPROVED BY STRUCTURAL ENGINEER.
3. CONCRETE MIXES SHALL BE DESIGNED BY A TESTING LABORATORY APPROVED BY THE ENGINEER. MIXES SHALL CONFORM TO APPLICABLE BUILDING CODE REQUIREMENTS, REGARDLESS OF OTHER MINIMUM REQUIREMENTS SPECIFIED HEREIN OR ON THE DRAWINGS. MIX DESIGNS SHALL BE SUBMITTED TO THE ENGINEER FOR APPROVAL BEFORE USE. DESIGNS SHALL SHOW PROPORTIONS OF CEMENT, FINE AND COARSE AGGREGATES AND WATER, AND GRADATION OF COMBINED AGGREGATES.
4. PROVIDE MIX DESIGNS THAT WILL MEET THE MINIMUM REQUIREMENTS LISTED BELOW. INCREASE CEMENT CONTENT OVER THAT SHOWN, IF REQUIRED TO OBTAIN IN THE COMPRESSIVE STRENGTH: CONCRETE MIX DESIGN SCHEDULE:

| LOCATION OF STRUCTURES | 28 DAYS COMPRESSIVE STRENGTH (PSI) | MINIMUM CEMENT CONTENT (SACK) | RANGE SLUMP (IN) | MAXIMUM AGGREGATE SIZE (IN) |
|---|---|---|---|---|
| A. FOUNDATION | 2,500 PSI | 5 | 3"-4" | 3"-4" |
| B. SLAB ON GRADE | 2,500 PSI | 5 1/4 | 3"-4" | 3"-4" |
| C. WALL PANELS | 2,500 PSI | 5 3/4 | 3"-4" | 3"-4" |
| D. CAST IN PLACE AND MISC. | 2,500 PSI | 5 3/4 | 3"-4 1/2" | 3"-4 1/2" |

5. REINFORCING STEEL SHALL HAVE MINIMUM PROTECTIVE CONCRETE COVERING AS FOLLOWS, UNLESS SPECIFICALLY DETAILED:
   CONCRETE CAST AGAINST AND EXPOSED TO WEATHER OR EARTH ..........3"
   FORMED SURFACES EXPOSED TO WEATHER OR EARTH
   A. #5 BAR OR SMALLER AND WIRE MESH ..........1 1/2"
   B. #6 TO #18 BARS ..........2"
   FORMED SURFACES NOT EXPOSED TO WEATHER OR EARTH
   A. SLABS, WALLS, AND JOISTS ..........3/4"
   B. BEAMS AND COLUMNS ..........1 1/2"
6. BEFORE CONCRETE IS PLACED, THE CONTRACTOR SHALL COORDINATE AND CHECK ALL TRADES TO ENSURE THE PROPER PLACEMENT OF ALL OPENINGS, SLEEVES, INSERTS, CURBS, DEPRESSIONS, ETC. RELATING TO THE WORK, AS SHOWN IN THE DRAWINGS. ANY CHANGE OR DISCREPANCY SHALL BE APPROVED BY THE STRUCTURAL ENGINEER.
7. ALL CONCRETE WITH A COMPRESSIVE STRENGTH IN EXCESS OF 3,000 PSI AT 28 DAYS SHALL BE PLACED UNDER SUPERVISION OF AN ASSIGNED SPECIAL INSPECTOR FOR THE PROJECT.
8. PLACEMENT DRAWINGS FOR THE REINFORCING STEEL SHALL BE PROVIDED AT THE SITE A MINIMUM OF ONE WORKING DAY PRIOR TO PLACING OF REINFORCING STEEL.
9. CONCRETE QUALITY: INSPECTIONS AND TESTS SHALL CONFORM TO THE LOCAL BUILDING CODE REQUIREMENTS FOR CONCRETE DESIGNED BY THE ULTIMATE STRENGTH METHOD.
10. ALL CONCRETE MIXES SHALL CONFORM TO THE PROPORTIONS ESTABLISHED BY THE CODE FOR THE VARIOUS CONCRETE STRENGTHS REQUIRED FOR WORK. CONTRACTOR SHALL ENGAGE A CERTIFIED INDEPENDENT TESTING LABORATORY TO PREPARE 6 DESIGNS FOR THE WORK. COPIES OF THE MIX DESIGN, AS WELL AS 7-DAY AND 28-DAY CYLINDER TEST RESULTS SHALL BE SENT TO THE STRUCTURAL ENGINEER AND THE LOCAL BUILDING OFFICIAL TO OBTAIN APPROVAL PRIOR TO ITS USE IN THE WORK.
11. PROVIDE 3/4" CHAMFER AT EXPOSED EDGES OF CONCRETE, UNLESS OTHERWISE SHOWN.
12. SECURE REINFORCING, ANCHOR BOLTS, INSERTS, ETC. RIGIDLY IN PLACE PRIOR TO POURING CONCRETE.
13. SUPPORT HORIZONTAL REINFORCING ON GALVANIZED CHAIRS EXCEPT MORTAR BLOCKS OR OTHER APPROVED METHOD OF SUPPORT MAY BE USED AT FOOTINGS, AND SLABS ON GRADE. NOTE THAT BRACING AND LIFT INSERTS, AND CHAIRS AT TILT-UP PANELS, NEED NOT BE GALVANIZED BUT SHALL HAVE PLASTIC TIPS.
14. REMOVE FORMS AT FOLLOWING MINIMUM TIMES AFTER POURING:
   A. AT SLAB EDGES - 24 HOURS.
   B. AT WALLS LESS THAN 4' HIGH - 36 HOURS
15. ALL CONCRETE WORK SHALL BE IN ACCORDANCE WITH THE 2016 CBC, CHAPTER 35: ACI 318-14 AND THE SPECIFICATION FOR CAST-IN-PLACE CONCRETE.

## ANCHOR BOLTS

1. ALL EXTERIOR WALLS TO BE SECURED WITH 5/8" DIA. x 12" A.B. AT 60" O.C. WITH 3.0"x3"x0.229" THICK PLATE WASHER. 7" MIN OF CONCRETE EMBEDMENT. MIN (2)-A.B. PER MUDSILL. END DISTANCE SHALL BE 7xø MIN, AND 12" MAX OF EACH END OF MUDSILL PL. SEE SHEAR WALL SCHEDULE FOR A.B. SPACING AS REQUIRED BY DESIGN SPECS. U.N.O.
2. ALL INTERIOR WALLS WITH SHOT PINS: RAMSET #3348 OR EQUIVALENT AT 36" O.C. AT BEARING WALLS AND 48" O.C. AT NON-BEARING WALLS, U.N.O. NO SHOT PIN IS ALLOW AT SHEAR WALLS.
3. HOLES TO RECEIVE EXPANSION/WEDGE ANCHORS SHALL BE 1/8" LARGER IN DIAMETER THAN THE ANCHOR BOLT, DOWEL OR ROD AND SHALL CONFORM TO MANUFACTURER'S RECOMMENDATION FOR EMBEDMENT DEPTH OR AS SHOWN ON THE DRAWINGS. LOCATE AND AVOID CUTTING EXISTING REBAR WHEN DRILLING HOLES IN ELEVATED CONCRETE SLABS.
4. EXPANSION ANCHORS SHALL BE HILTI KWIK-BOLT TZ PER ICC-ESR 1917, SIMPSON STRONG BOLT PER ICC-ESR 1771, OR APPROVED EQUAL. INSTALL PER MANUFACTURES RECOMMENDATIONS
5. EPOXY-GROUTED ANCHOR BOLTS SHALL BE ASTM A307 OR A36 THREADED ROD, HOT-DIPPED GALVANIZED OR STANLESS STEEL, IF EXPOSED TO WEATHER ELEMENTS. EPOXY GROUTED DOWELS SHALL BE DEFORMED REINFORCING ROD (ASTM A615, GRADE 60) PER THE DRAWING. USE A449 BOLTS FOR SIMPSON STRONG-TIE STEEL STRONGWALL / HARDY FRAME ANCHORING TO THE FOUNDATION.

## MASONRY:

1. STRENGTH SCHEDULE:

| SPCIFICED COMPRESSIVE STRENGTH OF MASONRY fm' (psi) | COMPRESSIVE STRENGTH OF CONCRETE MASONRY UNIT (psi) | COMPRESSIVE STRENGTH OF GROUT (psi) | MORTAR TYPE |
|---|---|---|---|
| 1500 | 1900 | 2,000 (CBC MIN.) | M OR S |

   1.1 MORTAL TO PROPORTIONED TO CONFORM WITH ASTM C270.
   1.2 MASONRY UNITS TO CONFORM TO ASTM C90.
   1.3 GROUT ALL CELLS SOLID WITH MATERIAL THAT CONFORMS TO ASTM C476.
2. REINFORCE WALLS WITH INTERMEDIATE GRADE ASTM A615, GRADE 60 BARS. LAP BARS 65 DIAMETERS, AND STAGGER WHERE POSSIBLE.
3. USE 12"x8"x16" OR 8"x8"x16" (SEE PLAN) STANDARD BLOCK LAID IN COMMON BOND, UNLESS NOTED OTHERWISE. (SEE ARCHITECTURAL DRAWINGS)
4. TYPICAL MASONRY WALL REINFORCING IS AS SHOWN ON THE DRAWINGS.
5. SPECIAL INSPECTION OF MASONRY AND WALL EXPOSED TO WEATHER PROVIDE MASONRY UNITS TYPE GRADE N AND MORTAL TYPE M. AS A MINIMUM, AT ALL OTHER CONSTRUCTION PROVIDE MASONRY UNITS TYPE GRADE S.
6. REINFORCEMENT SHALL BE SECURED AGAINST DISPLACEMENT PRIOR TO GROUTING BY WIRE POSITIONERS OR OTHER SUITABLE DEVICES.

## LUMBER AND TIMBER FRAMING

1. USE DOUGLAS FIR-LARCH FRAMING LUMBER, CLASSIFIED UNDER STRUCTURAL LIGHT FRAMING, MANUFACTURED AND GRADED IN ACCORDANCE WITH WCLIB OR WWPA GRADING RULES, UNLESS SPECIFICALLY SHOWN OTHERWISE. USE DOUGLAS FIR NO.1 GRADE OR BETTER UNLESS NOTED ON PLAN OTHERWISE, EXCEPT THAT STUDS, BLOCKING, PLATES AND NAILERS MAY BE #2 OR BETTER.
2. FRAMING LUMBER MOISTURE CONTENT SHALL NOT EXCEED 19% AT THE TIME OF CONSTRUCTION.
3. FRAMING LUMBER DIRECTLY IN CONTACT WITH CONCRETE SLABS ON GRADE SHALL BE PRESSURE PRESERVATIVE TREATED. FRAMING LUMBER PERMANENTLY EXPOSED TO WEATHER (MECHANICAL UNIT SLEEPERS) SHALL BE CALIFORNIA REDWOOD NO. 2 GRADE OR BETTER OR DOUGLAS FIR PRESSURE PRESERVATIVE TREATED.
4. PROVIDE SHEATHING AS FOLLOWS:
   A. ROOF 7/16" OR 1/2" OSB STRUCTURAL 1 APA RATED 40/20. WHERE INDICATED ON ROOF SHEATHING AND NAILING SCHEDULE.
   B. ALL SHEATHING SUBSTITUTIONS SHALL BE OF EQUAL RATING IN ACCORDANCE WITH REPORT PRP 108.
6. PROVIDE BOLT HOLES IN WOOD 1/16" LARGER THAN BOLTS. U.O.N. PROVIDE STANDARD PLATE WASHERS AT HEADS AND/OR NUTS WHICH BEAR AGAINST WOOD EXCEPT AS FOLLOWS:
   1. ROOF TOP SLEEPERS (M.B., ALL THREAD ROD, OR LAG BOLT ANCHORS) – M.I. WASHERS.
7. PROVIDE VERTICAL SLOTTED HOLES WHERE SHOWN OR NOTED AS SLOTTED AS FOLLOWS:
   A. 3/4" DIAMETER MACHINE BOLTS – 1 1/2" VERTICAL.
   B. 1" DIAMETER MACHINE BOLTS – 2" VERTICAL
8. LAG SCREWS REQUIRE PREBORED LEAD HOLES. LEAD HOLES FOR THE SHANK SHALL HAVE A DEPTH EQUAL TO THE LENGTH OF THE UNTHREADED PORTION IN THE MAIN MEMBER.
9. (HDU8) ETC. DENOTES "SAMPSON STRONG TIE" CONNECTORS, OR APPROVED EQUAL.
10. FASTENERS FOR PRESSURE-PRESERVATIVE TREATED AND FIRE RETARDANT TREATED WOOD SHALL BE OF HOT-DIPPED ZINC-COATED GALVANIZED, STANLESS STEEL, COPPER, OR SILICON BRONZE.
11. ALL STRUCTURAL CONNECTING METAL, HANGERS AND STRAPS IN CONTACT WITH PRESSURE-PRESERVATIVE TREATED MATERIAL MUST BE HOT-DIPPED GALVANIZED OR BETTER.

## TYPICAL NAILING SCHEDULE

UNLESS OTHERWISE SHOWN OR NOTED, THE GENERAL NAILING REQUIREMENTS SHALL COMPLY WITH CBC CHAPTER 23 AND THE FOLLOWING ADDITIONAL MINIMUM REQUIREMENTS. THE MORE STRINGENT REQUIREMENTS SHALL TAKE PRECEDENCE. ALL NAILS USED TO ATTACH TO THE PRESSURE TREATED PLATES ARE TO BE HOT DIPPED GALVANIZED.

TYPICALLY USE 16d NAILS FOR CONNECTING 2x MEMBERS AND 8d OR 10d NAILS FOR CONNECTING 1x MEMBERS WITH A MINIMUM OF 2 NAILS AT EACH JOINT.

SUB-BORE WHEN NAILS TEND TO SPLIT WOOD AND SUB-BORE FOR 20d AND LARGER NAILS (THE DRILL DIAMETER SHALL BE 0.75 x NAIL DIAMETER).

STUDS AND POSTS: (FULL HEIGHT BETWEEN SILL AND TOP PLATE) STUDS TO
- SILL OR TOP PLATE .................. 2-16d END NAIL OR 2-10d TOE-NAILS EACH SIDE
- 4x POST TO SILL .................. "SIMPSON" A34 EA SIDE EACH END
- 6x POST TO SILL .................. "SIMPSON" A35 EA SIDE EACH END
- ADJACENT STUDS AND POSTS.......... 16d @ 16"
- STUDWALL BLOCKING.................. 2-16d END NAIL OR 2-10d TOE-NAIL EACH END EACH SIDE

DOUBLE TOP PLATE: (MINIMUM 6'-0" LAPS AT SPLICE)
- PLATE TO PLATE .................. 16d @ 16"
- AT ALL INTERSECTIONS.................. 3-16d AT PLATE LAP
- AT TYPICAL SPLICES.................. ADDITIONAL 10-16d EACH SIDE OF SPLICES UNLESS NOTED OTHERWISE (REFER TO FRAMING PLANS & DETAILS)
- JOIST TO TOP PLATE OR TRUSS TO BEAM.................. 2-16d TOE-NAIL EACH SIDE (PROVIDE FRAMING CLIPS WHERE INDICATED IN DRAWINGS)

JOIST BLOCKING: (MIN 2x BLKG FULL DEPTH OF JOIST; TYPICAL @ ALL SUPPORTS AND AS INDICATED ON DRAWINGS)
- BLOCKING TO JOIST.................. 2-16d END NAIL OR 2-10d TOE-NAIL EACH SIDE
- BLOCKING TO PLATE.................. 3-16d TOE-NAIL (UNLESS NOTED OTHERWISE – REFER TO THE FRAMING DETAILS)

HEADERS AND BEAMS (UNLESS OTHERWISE SPECIFIED IN THE DRAWINGS):
- TO TOP OF POST.................. "SIMPSON" AC SERIES POST CAPS
- TO SIDE OF POST.................. "SIMPSON" HH SERIES

COMMON WIRE NAIL SCHEDULE:

| PENNYWEIGHT | NAIL LENGTH | NAIL DIAMETER |
|---|---|---|
| 8d | 2 1/2" | 0.131" |
| 10d | 3" | 0.148" |
| 12d | 3 1/4" | 0.148" |
| 16d | 3 1/2" | 0.162" |
| 20d | 4" | 0.192" |

## PARALLAM BEAMS: (ICC# ESR-1387)

1. LATERAL SUPPORT IS REQUIRED AR ALL BEARING POINTS AND ALONG COMPRESSION EDGE AT INTERVALS OF 24" O.C. OR CLOSER.
2. ALLOWABLE DESIGN STRESSES:
   Fb= 2900 PSI
   Fv= 290 PSI
   E= 2,000,000 PSI
3. BEARING LENGTH SHOULD NEVER BE LESS THAN 1 1/2" AT ENDS, 3 1/2" AT INTERMEDIATE SUPPORTS. BEARING ACROSS THE FULL WIDTH OF THE BEAM IS REQUIRED.
4. DO NOT OVERHANG SEAT CUTS ON PARALLAM PSL BEAMS BEYOND THE INSIDE FACE OF THE SUPPORT MEMBER.
5. NOTCHING FOR UNIFORMLY LOADED BEAMS ONLY: 2" DIAMETER HOLES MAXIMUM WITHIN THE MIDDLE 1/3 OF THE SPAN AND WITHIN THE MIDDLE 1/3 OF THE DEPTH ADDITIONAL HOLES WITHIN THE REGION MUST BE A MINIMUM DISTANCE OF TWICE THE LARGEST HOLE DIAMETER. RECTANGULAR HOLES ARE NOT ALLOWED. NO NOTCHING IS ALLOWED IN CANTILEVER MEMBERS WITHOUT PRIOR APPROVAL BY THE ENGINEER.
6. APPROVED BY NATIONAL EVALUATION REPORT NER-292 WHERE MEMBERS QUALIFY AS REPETITIVE MEMBERS AN ALLOWABLE BENDING STRESS INCREASE OF 4% IS PERMITTED.
7. PARALLAM PSL SHALL BEAR A LABEL STATING THE MANUFACTURE'S NAME AND PLANT NUMBER, THE NATIONAL EVALUATION SERVICE NUMBER, AND THE LABEL OF THE PFS CORPORATION (NER-QA251).
8. WHEN REQUESTED A COMPLETE SET OF CALCULATIONS SHALL BE PREPARED BY THE MANUFACTURER UNDER THE SUPERVISION OF A CIVIL OR STRUCTURAL ENGINEER.
9. SHOP DRAWINGS WHEN REQUESTED SHALL BE PROVIDED BY THE MANUFACTURER. THE MANUFACTURER SHALL NOT PROCEED WITH THE FABRICATION AND/OR CUTTING UNTIL THE SHOP DRAWING AND DESIGN CALCULATIONS HAVE BEEN REVISEDBY THE ARCHITECT AND/OR ENGINEER.
10. ADHESIVES USED IN THE MANUFACTURING OF THE PSL SHALL BE OF WATERPROOF TYPE CONFORMING TO THE REQUIREMENTS OF ASTM D-2559.
11. THE CONTRACTOR SHALL GIVE NOTIFICATION TO THE MANUFACTURER REPRESENTITIVE PRIOR TO ENCLOSING THE PARALLAM PSL TO PROVIDE OPPURTUNITY FOR INSPECTION OF THE INSTALLATION.

## MICROLAM BEAMS: (ICC# ESR-1387)

1. MICROLAM (ML OR LVL) BEAMS ARE TO BE THE SIZE SHOWN ON THE PLAN, AND TO BE MANUFACTURED BY TRUSS JOINT CORP.
2. ALLOWABLE DESIGN STRESSES:
   Fb= 2900 PSI
   Fv= 290 PSI
   E= 2,000,000 PSI

## TIMBERSTRAND BEAMS: (ICC# ESR-1387)

1. TIMBERSTRAND (LSL) BEAMS ARE TO BE THE SIZE SHOWN ON THE PLAN, AND TO BE MANUFACTURED BY TRUSS JOINT CORP.
2. ALLOWABLE DESIGN STRESSES:
   Fb= 2325 PSI
   Fv= 310 PSI
   E= 1,550,000 PSI

## LP SOLID START LVL BEAMS: (ICC# ESR-2403)

1. LVL 2950Fb-2.0E BEAMS ARE TO BE THE SIZE SHOWN ON THE PLAN, AND TO BE MANUFACTURED BY LOUISIANA PACIFIC CORP.
2. ALLOWABLE DESIGN STRESSES:
   Fb= 2950 PSI
   Fv= 290 PSI
   Fc= 3200 PSI
   Fc= 750 PSI
   E= 2,000,000 PSI

## GLUE LAMINATED TIMBER BEAMS: (ICC# ESR-1937)

1. ALL GLUE LAMINATED LUMBER SHALL CONFORM WITH ANSI/AICT A190.1, STRUCTURAL GLUED-LAMINATED TIMBER.
2. CONVENTIONALLY SIZED GLUED-LAMINATED TIMBERS SHALL BE DOUGLAS FIR-LARCH SPECIES AND PROVIDE STRESS VALUES THAT MEET OR EXCEED THE REQUIREMENTS FOR COMBINATION 24F-V4 FOR SIMPLE SPAN MEMBER AND 24F-V8 FOR OTHER MEMBERS. GLUED-LAMINATED TIMBER MEMBERS SHALL HAVE A CERTIFICATE OF INSPECTION ISSUED BY THE AMERICAN INSTITUTE OF TIMBER CONSTRUCTION, THE WESTERN WOOD PRODUCTS ASSOCIATES OR BY APA-THE ENGINEERED WOOD ASSOCIATION, INDICATING CONFORMANCE TO THE SPECIFICATIONS. A COPY SHALL BE PROVIDED TO THE BUILDING OFFICIAL PRIOR TO ERECTION OF THE FRAMING.
3. MOISTURE CONTENT OF THE TIME OF THE GLUED-LAMINATED TIMBER FABRICATION SHALL NOT EXCEED 16%.
4. CONVENTIONALLY SIZED GLUED-LAMINATED TIMBER CAMBER SHALL BE A STANDARD CAMBER OF 3500 FEET PLUS OR MINUS ¾" FOR BEAM UP TO 20 FEET LONG AND ⅜" FOR BEAMS 20 TO 40 FEET LONG.

## STRUCTURAL STEEL:

1. STRUCTURAL STEEL AND MISCELLANEOUS IRON SHALL CONFORM TO AISC SPECIFICATIONS AND CODE OF STANDARD PRACTICES. USE AWS SPECIFICATIONS FOR WELDING.
2. SHOP PAINTING IS REQUIRED ONLY AT STEEL EXPOSED TO WEATHER, WHERE USED THE FOLLOWING APPLIES: CLEAN STEEL SURFACES THOROUGHLY. APPLY ONE COAT OF RUST-INHIBITIVE PAINT CONFORMING TO FEDERAL SPECIFICATION TT-P-86, TYPE 3 EVENLY AND COMPLETELY. TOUCH UP ABRASIONS AND CHIPS IN SHOP. COAT AFTER ERECTION USING THE SAME PAINT.
3. STEEL MEMBERS EXPOSED TO WEATHER SHALL BE PAINTED.
4. WELDED STUDS SHALL BE TRW NELSON STUD WELDING OR EQUIVALENT. 3/4" AND LARGER SHALL BE S3L AND 5/8" DIAMETER AND SMALLER SHALL BE H4L.
5. AT CONTRACTOR'S OPTION, SHEAR TABS FOR STEEL BEAMS MAY BE FIELD WELDED TO EMBED PLATE TO FACILITATE ERECTION. EMBEDDED PLATE MAY BE OVERSIZED BY 1" IN EACH DIRECTION.
6. COMPLETE WELDING PROCEDURE SHALL BE SUBMITTED TO AND APPROVED BY THE STRUCTURAL ENGINEER OF RECORD AND THE BUILDING DEPARTMENT BEFORE ANY WELDING IS COMMENCED.
7. BOLTS SHALL BE INSTALLED "SNUG TGHT" WITH THREADS EXCLUDED FROM THE SHEAR PLANE, U.O.N. BOLTS NOTED AS "(S.C)" ON THE PLANS AND DETAILS SHALL BE INSTALLED AS SLIP CRITICAL (THREADS EXCLUDED FROM THE SHEAR PLANE) WITH CONTACT SURFACES FREE OF PAINT.
8. E70-T4 OR NS-3M ELECTRODES SHALL NOT BE USED.
9. HARDENED WASHERS SHALL BE USED AT A325 BOLTS AND A490 BOLTS USED IN SLIP CRITICAL (S.C.) CONNECTIONS AND OVERSIZED AND SHORT SLOTTED HOLES. 5/16" THICK PLATE WASHERS OF STRUCTURAL GRADE MATERIAL SHALL BE USED AT LONG SLOTTED HOLES. WASHERS SHALL HAVE A SIZE SUFFICIENT TO COMPLETELY COVER THE SLOT AFTER INSTALLATION.
10. ANY CUTS MADE IN FLANGES SHALL BE PROPORTIONED SO AS TO AVOID SHARP CUT CORNERS. ALL CORNERS SHALL BE ROUNDED TO MINIMIZE NOTCH EFFECTS. CUT EDGES SHALL CUT OR GROUND TO HAVE A SURFACE ROUGHNESS MEETING THE REQUIREMENTS OF AWS C4.1-77 CLASS 4, OR SMOOTHER.
11. STRUCTURAL STEEL MATERIAL SPECIFICATIONS SHALL BE FOLLOWED STEEL SCHEDULE:

STEEL MATERIAL SCHEDULE

| ITEM | SPECIFICATIONS |
|---|---|
| WF BEAM AND COLUMNS | ASTM A992 |
| CHANNELS | ASTM A36 |
| ANGLES | ASTM A36 |
| RECTANGULAR HSS TUBE STEEL | ASTM A500 GRADE B |
| ROUND HSS TUBE STEEL | ASTM A500 GRADE B |
| STEEL PIPE | ASTM A53 GRADE B |
| STIFFEER/SHEAR PLATES | ASTM A36' |
| COLLECTOR SHEAR PLATES | A572 GRADE 50 OR A529 GRADE 50 |
| GUSSET PLATES | ASTM A36 |
| BRACED FRAME GUSSET AND CONNECTION PLAES | ASTMA572 GRADE 50 OR A529 GRADE 50 |
| HSS COL. BASE PLATES | ASTM A36 |
| WF COL BASE PLATE <=4" | A572 GRADE 50 OR A529 GRADE 50' |
| WF COL BASE PLATE >4" | A572 GRADE 42' |
| DOUBLER PLATE | A572 GRADE 50 OR A529 GRADE 50 |
| CONTINUITY PLATES | A572 GRADE 50 OR A529 GRADE 50 |
| MISCELLANEOUS PLATES | ASTM A36 |
| MACHINE BOLTS (M.B.) | ASTM A307 GRADE A' |
| LAG BOLTS | ASTM A307 GRADE A |
| HIGH STRENGTH BOLTS (H.S.B.) U.O.N. | ASTM A325 OR F1852' |
| 1"ø HIGH STRENGTH BOLT (H.S.B.) | ASTM A490 OR F2280' |
| TWIST-OFF TENSION CONTROLLED BOLTS | ASTM F1852 |
| THREADED RODS | ASTM A36 |
| NITS | ASTM A563 |
| HARDENED WASHERS | ASTM F436 |
| WASHERS-DIRECT TENSION INDICATORS | ASTM F959 |
| ANCHOR BOLTS TYP. (U.N.O.) | ASTM F1554 GRADE 36 OR A36 |
| ANCHOR AT MOMENT FRAMES AND BRACED FRAMES | ASTM F1554 GRADE 105 |
| WELDED STEEL HEADED STUDS | ASTM 108 GRADE 1015-1020 |
| WELDING ELECTRODES | E70XX |

12. STAINLESS STEEL SHALL BE "TYPE 18-8 STAINLESS STEEL" TYPE 302, 303 OR 304, AND SHALL MEET ASTM276, A479, A581, AND A582.

## FOUNDATIONS (revision 2)

1. FOUNDATIONS DESIGN IS BASED ON SOIL INVESTIGATION REPORT BY: GEO-LOGIC ASSOCIATES, PROJECT NO. PA18.1042.00 DATED 01-15-2019
   A. ALLOWABLE SOIL PRESSURE: 1,500 PSF FOR DEAD LOAD + LIVE LOAD
      2,000 PSF FOR DEAD LOAD + LIVE LOAD + WIND OR SEISMIC LOAD
   B. COFFICTION OF SLIDING: 0.300
3. ALL EXCAVATIONS SHALL BE INSPECTED AND APPROVED BY THIS SOILS ENGINEER OR INSPECTOR PRIOR TO POURING FOOTINGS.
4. FOOTINGS SHALL BE POURED AGAINST FIRM UNDISTURBED NATURAL SOIL AS REQUIRED BY SOIL ENGINEER.
5. FILL AT RAMP WALLS AND RETAINING WALLS SHALL BE CLEAN OF NON-EXPANSIVE MATERIAL FREE OF ORGANICS AND PLACED UNDER CONTROLLED COMPACTION TO 90% OF MAXIMUM DENSITY, U.N.O.
6. ROOF AND AREA RUNOFF, AND AREA DRAINAGE SHALL BE DIRECTED AWAY FROM BUILDING.
7. NO WATER SHALL BE ALLOWED TO POND WITHIN FOUNDATION EXCAVATION AREA.
8. PROVIDE ADEQUATE DRAINAGE BEHIND ALL RETAINING WALLS AWAY FROM BUILDING.
9. HOLD DOWNS:
   BOLT HOLES SHALL BE 1/16" (MAX.) OVERSIZED @ THE CONNECTIONS OF THE HOLD DOWNS TO THE POST. "INSPECTOR TO VERIFY."
   HOLD DOWN CONNECTIONS SHALL BE TIGHTENED JUST PRIOR TO COVERING THE WALL FRAMING.
   USE 4X4 POST AT ALL HD-A LOCATIONS U.N.O.

## SPECIAL INSPECTIONS:

1. PROVIDE SPECIAL INSPECTION AS REQUIRED BY SECTION 1701 OF THE 2016 CALIFORNIA BUILDING CODE FOR THE FOLLOWING ITEMS:
   A. PLACEMENT OF REINFORCING STEEL.
   B. BOLTS IN CONCRETE.
   C. STRUCTURAL WELDING (IF APPLICABLE).
   D. TAKING OF TEST SPECIMENS AND PLACING OF ALL CONCRETE.
   J. INSTALLATION OF BOLTS AND REINFORCEMENT IN EPOXY.
2. GENERAL CONTRACTOR SHALL OBTAIN SPECIAL INSPECTION FORMS FROM THE CITY. FORMS SHALL BE COMPLETED, SIGNED, AND RESUBMITTED PRIOR TO PERMIT ISSUE.
3. THE ENGINEER HAS NOT BEEN RETAINED FOR SUPERVISION OR INSPECTIONS, BUT WILL RESOLVE IN WRITING ITEMS BROUGHT TO HIS ATTENTION. THE ENGINEER SHALL NOT BE RESPONSIBLE FOR VERBAL INSTRUCTIONS.
4. SPECIAL INSPECTION AGENCY AND ALL SPECIAL INSPECTORS SHALL BE RECOGNIZED AND APPROVED BY THE CITY BUILDING OFFICIAL AS DESCRIBED IN THE CURRENT EDITION OF THE SPECIAL INSPECTION AGENCY RECOGNITION LIST WHICH IS PUBLISHED BY THE ICBO SPECIAL INSPECTION COMMITTEE.

## ENGINEERING OBSERVATION

1. THE STRUCTURAL ENGINEER OF RECORD SHALL PROVIDE STRUCTURAL OBSERVATION PER SECTION 1702 OF 2016 CALIFORNIA BUILDING CODE AND THE CONTRACTOR SHALL NOTIFY THE STRUCTURAL ENGINEER 48 HOURS IN ADVANCE OF COMPLETING THE FOLLOWING TO ARRANGE FOR PERIODIC OBSERVATION:
   A. PLYWOOD SHEAR WALLS WHICH REQUIRE NAILING SPACED CLOSER THAN 4" O.C.
   B. FINAL FRAMING.

## ABBREVIATIONS

| | |
|---|---|
| ADJ | ADJACENT |
| ALT | ALTERNATE |
| A BOLT(S) | ANCHOR BOLT(S) |
| ARCH DRWGS | ARCHITECTURAL DRAWINGS |
| @ | AT |
| BM | BEAM |
| BRG | BEARING |
| BLK | BLOCK |
| BLKG | BLOCKING |
| BOT | BOTTOM |
| BRDG | BRIDGING |
| CBC | CALIFORNIA BUILDING CODE |
| CL | CENTER LINE |
| CTRD | CENTERED |
| CLR | CLEAR |
| COL | COLUMN |
| CONC | CONCRETE |
| CMU | CONCRETE MASONRY UNIT |
| CONSTR | CONSTRUCTION |
| CONT | CONTINUOUS |
| CTRSK | COUNTERSINK |
| DIAG | DIAGONAL |
| DIA | DIAMETER |
| DBL | DOUBLE |
| DF | DOUGLAS FIR (LARCH) |
| DRWGS | DRAWINGS |
| EA | EACH |
| FTG | FOOTING |
| FNDN | FOUNDATION |
| FLR | FLOOR |
| FRAM | FRAMING |
| GLB | GLUED-LAMINATED BEAM |
| HORIZ | HORIZONTAL |
| ICC | INTERNATIONAL CODE COUNCIL |
| MAX | MAXIMUM |
| MIN | MINIMUM |
| N/A | NOT APPLICABLE |
| NTS | NOT TO SCALE |
| OPT | OPTIONAL |
| PERPEN | PERPENDICULAR |
| PL | PLATE |
| PLY | PLYWOOD |
| PREMAN | PREMANUFACTURED |
| PRESS TRTD | PRESSURE TREATED |
| REINF | REINFORCING |
| REQD | REQUIRED |
| SCHED | SCHEDULE |
| SHT | SHEET |
| SIM | SIMILAR |
| SQ | SQUARE |
| STD | STANDARD |
| STL | STEEL |
| TOEN | TOE-NAIL |
| T & B | TOP & BOTTOM |
| TPI | TRUSS PLATE INSTITUTE |
| TYP | TYPICAL |
| UNO | UNLESS NOTED OTHERWISE |
| VERT | VERTICAL |
| W/ | WITH |

JOB COPY
These plans mu... be kept on the job at all times.
CITY OF MORGAN HILL
BUILDING DIVISION

## STRUCTURAL SHEET INDEX


| | |
|---|---|
| 1S | STRUCTURAL NOTES |
| 2S | FOUNDATION PLAN |
| 3S | CEILING FRAMING PLAN |
| 4S | ROOF FRAMING PLAN |
| 5S | FOUNDATION DETAILS |
| 6S | FRAMING DETAILS |



WESTON MILES
ARCHITECTS
17500 Depot Street, Suite #200
Morgan Hill, CA 95037
1 • 408 • 779 • 6686
• Architecture • Landscape •


LICENSED ARCHITECT – STATE OF CALIFORNIA – RENEWAL 9-30-19
NOT VALID WITHOUT WET SIGNATURE

HD DESIGN ENGINEERING INCORP.
CONSULTANT JOB NO: 17-20

REGISTERED PROFESSIONAL ENGINEER – HOC DOAN – No. C 62142 – Exp. 9-30-19 – CIVIL – STATE OF CALIFORNIA

1 PLAN CHECK + ENGINEERING REVISION 01-30-2019
2 PLAN CHECK 03-27-2019

# GENERAL NOTES

## CENTENNIAL RECREATION CENTER EXPANSION PROJECT

CITY OF MORGAN HILL
171 W EDMUNDSON AVE, MORGAN HILL, CA 95037


These drawings are instruments of service and are the property of WESTON MILES ARCHITECTS, INC. All designs and other information on the drawings are for use on the specified project and shall not be used otherwise without the expressed written permission of WESTON MILES ARCHITECTS, INC.

Written dimensions on these drawings shall have precedence over scaled dimensions. Contractors shall verify and be responsible for all dimensions and conditions on the job and this office shall be notified of any variations from the dimensions and conditions shown by these drawings. Shop details shall be submitted to this office for approval before proceeding with fabrication.

© Copyrighted 2018


DATE: 11/09/2018
JOB NO: 18001

1S

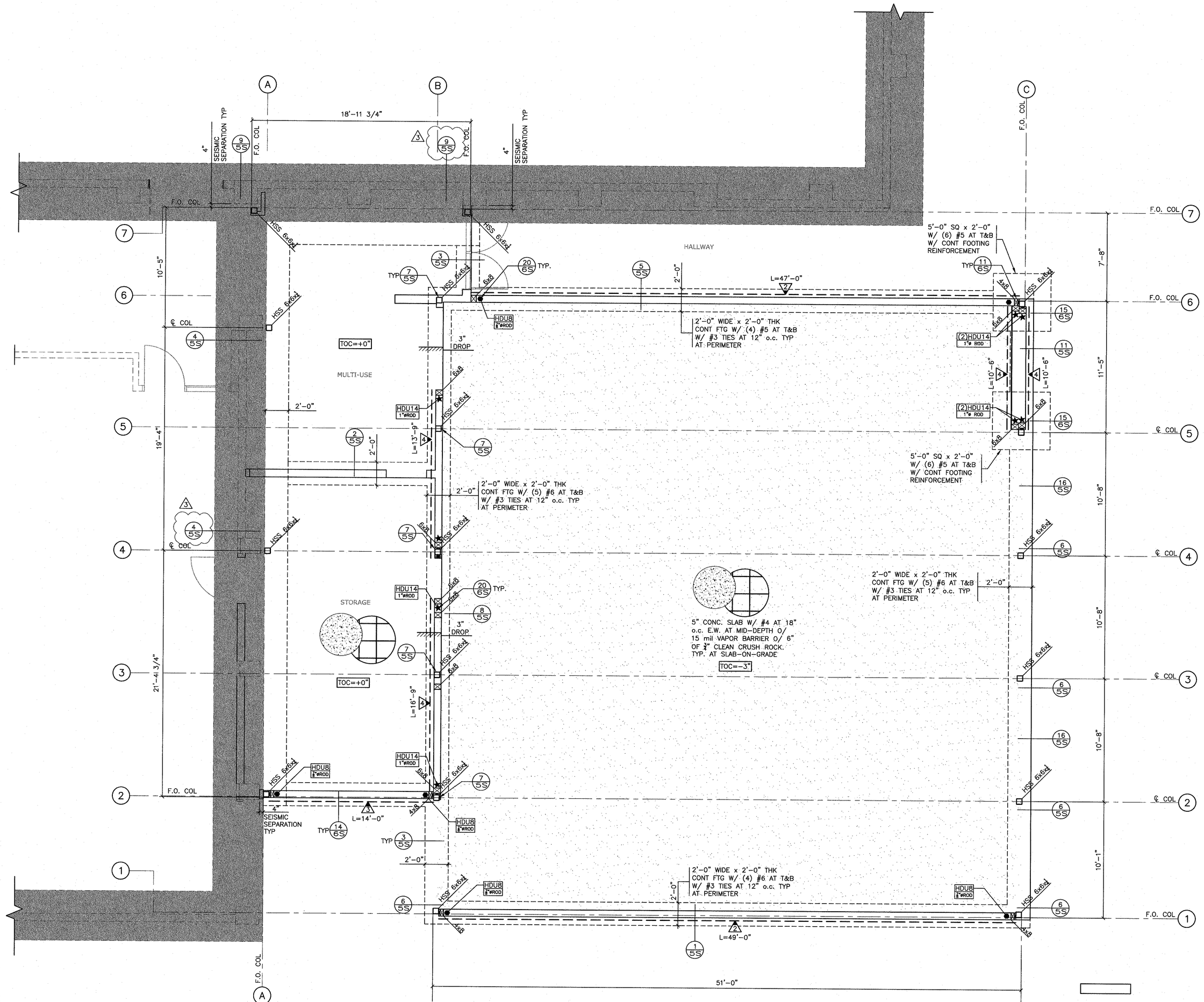


## FOUNDATION PLAN

NOTES:
1. SEE GENERAL NOTES ON SHEET 1S

SCALE: 1/4"=1'-0"

## SHEAR WALL SCHEDULE & SPECIFICATIONS

| TYPE | SHEATHING | NAILING edge/field | EDGE NAIL'G member | SILL PLATE to wd fram'g | TOP PL connection A35 or LTP4 | SILL PL contact w/ concrete | MUD SILL to foundation | SHEAR CAP. (Seismic) | SHEAR CAP. (Wind) |
|---|---|---|---|---|---|---|---|---|---|
| 1 | 1/2" (32/16) EXP 1 | 10d @ 6"/12" | 2-2x | 2x 16d @ 6" | 24" o.c. | 3x | 5/8"ø @ 48" o.c. | 260 plf | 365 plf |
| 2 | 1/2" (32/16) EXP 1 | 10d @ 4"/12" | 2-2x | 2x 16d @ 4" | 16" o.c. | 3x | 5/8"ø @ 32" o.c. | 350 plf | 533 plf |
| 3 | 1/2" (32/16) EXP 1 | 10d @ 3"/12" | 4x | 3x SDS @ 8" | 12" o.c. | 3x | 5/8"ø @ 28" o.c. | 490 plf | 685 plf |
| 4 | 1/2" (32/16) STR 1 | 10d @ 2"/12" | 4x | 3x SDS @ 6" | 8" o.c. | 3x | 5/8"ø @ 24" o.c. | 640 plf | 895 plf |
| 2 2 | 1/2" (32/16) EXP 1 BOTH SIDES | 10d @ 4"/12" | 4x | 3x SDS @ 4" | 8" o.c. | 3x | 5/8"ø @ 16" o.c. | 700 plf | 1066 plf |
| 3 3 | 1/2" (32/16) EXP 1 BOTH SIDES | 10d @ 3"/12" | 4x | 3x SDS @ 3" | 6" o.c. | 3x | 5/8"ø @ 16" o.c. | 980 plf | 1370 plf |
| 4 4 | 1/2" (32/16) STR 1 BOTH SIDES | 10d @ 2"/12" | 4x | 3x SDS @ 2" | 8" o.c. EA. SIDES | 3x | 5/8"ø @ 12" o.c. | 1280 plf | 1790 plf |

SHEAR SCHEDULE NOTES:

1. USE HOT DIP GALVANIZED ANCHOR BOLTS WITH HOT DIP GALVANIZED 1/4"x3" SQUARE PLATE WASHERS AT FOUNDATION SILL PLATES.
2. "SDS" DENOTES 1/4" DIAMETER x 6" SOMPSON SDS SCREW. NOTE THAT OTHER 1/4" DIAMETER SCREWS MAY NOT BE SUBSTITUTED AT 1.1 RATIO.
3. WHERE SDS SCREWS ARE REQUIRED. PROVIDE 4x MIN RIMS AT SOLID SAWN LUMBER FRAMING AND 3 1/2" LSL MINIMUM RIM AT ENGINEERED LUMBER FRAMING.
4. RIM CLIP SPACING SHALL BE DETERMINED BY SHEAR WALL BELOW.
5. 3x SILL PLATES ARE ONLY REQUIRED WHERE APPLIED IN CONTACT WITH CONCRETE. PROVIDE 2x SOLE PLATE ABOVE WOOD FRAMING.
6. SHEATHING TO BE 4'-0" X 8'-0" MIN. EXCEPT AT BOUNDARIES OR AT CHANGE IN FRAMING. PROVIDE MIN. 2X FRAMING MEMBER AT ALL BOUNDARIES U.N.O.
7. BLOCK ALL AJOINING PLYWOOD EDGES WITH 3X LUMBER AND STAGGER NIALS (PLATES, STUDS, POST, BLOCKING, ETC.)
8. ALL NAILS LISTED ABOVE ARE COMMON NAILS OR GALVANIZED NAILS. GALVANIZED NAILS MAY BE HOT DIPPED OR TUMBLED ONLY. 8d NAIL SHALL HAVE A MINIMUM DIAMETER OF 0.131" AND 10d NAILS SHALL HAVE A MINIMUM OF 0.148"

## FOUNDATION NOTES:

1. CONTRACTOR SHALL VERIFY ALL DIMENSIONS AND CONDITION PRIOR TO STARTING CONSTRUCTION. SEE ARCHITECTURAL DRAWINGS FOR ADDITIONAL BUILDING DIMENSIONS.
2. ALL STRUCTURAL FOOTING SHALL BE EMBEDDED MINIMUM 24" INCHES BELOW ADJACENT LOWEST FINISH GRADE.
3. THE EMBEDMENT OF STRUCTURAL FOOTINGS LOCATE IN THE FILL AREAS SHALL BE DETERMINED BY SOIL ENGINEER AT THE TIME OF FOOTING EXCAVATIONS.
4. ALL DRAIN PIPES FROM FOOTING WALL SHOULD BE TIED IN TO APPROPRIATE NON-EROSIVE DRAINAGE OUT-LET.
5. "C.J." DENOTES CONSTRUCTION JOINT. "W.P.J." DENOTES WEAKEN PLAN JOINT. W.P.J.'s MAY NOT BE SUBSTITUTED FOR C.J.'s (EVEN WHEN LASER SCREEN IS USED). SEE DETAILS 12 AND 13/5S.
6. FOR UTILITY PIPING AND/OR CONDUITS NEAR FOUNDATIONS, SEE DETAIL 15/5S.
7. FOR CONSTRUCTION JOINT IN CONTINUOUS FOOTINGS, SEE DETAIL 11/5S.
8. CONTRACTOR SHALL COORDINATE TOP OF FOOTING ELEVATIONS WITH CIVIL DRAWINGS TO ENSURE ADEQUATE COVERAGE OVER TOP OF FOOTINGS.
9. FOR TYPICAL BAR BENDS, SEE 20/4S.
10. FOR TYPICAL BAR LAP AND EMBEDMENT, SEE DETAIL 17/4S.
11. FOR TYPICAL FOOTING REINFORCING AT CORNERS, SEE DETAIL 20/4S
12. • HDUB INDICATES APPROXIMATELY HOLDOWN LOCATION AND TYPE BY SIMPSON -TIE (OR APPROVED EQUAL).
13. L=6'-0" (INDICATES SHEAR WALL TYPE AND APPROXIMATE LENGTH OF WALL, SEE SHEAR WALL SCHEDULE.
14. HOLDOWN LOCATIONS SHALL NOT BE SCALED OFF OF FOUNDATION PLAN. THEY SHALL BE LOCATED BY CLOSE EVALUATION IF ARCHITECTURAL FLOOR PLAN IN CONJUNCTION WITH TYPICAL HOLDOWN DETAIL.
15. ANCHOR BOLD (WHERE CALLED FOR) SHALL BE 5/8"ø x12" LONG SPACED AT 4'-0" o.c. MAX U.N.O. SEE PLAN AND SHEAR WALL SCHEDULE. PROVIDE MIN. 2 BOLTS PER LENGTH OF SILL PLATE. 12" MAX AND 6" MIN. FROM PLATE ENDS. OMITTED BOLT MAY BE REPLACED W/ 5/8"ø SIMPSON WEDGE ANCHORS. INSTALLED NO LESS THAN 7 DAYS AFTER CONCRETE IS POURED.
16. SHOT PINS FOR NON-STRUCTURAL WALL SILL PLATE SHALL BE 0.145"ø x 2" LONG POWER DRIVEN PINS SPACED AT 16" o.c. MAX. PROVIDE MIN. 2 PINS PER LENGTH OF SILL PLATE. 12" MAX. AT 6" MIN. FROM PLATE ENDS. PIN HEADS SHALL BE DRIVEN FLUSH W/ DISK WASHER AND EMBEDDED MIN. 3/4" IN CONCRETE SLAB. A.B. MAY BE SUBSTITUTED FOR PINS AT CONTRACTOR OPTION.
17. DETAILER OPTION TO USE TWO SEPARATE OPEN TIES IN LIEU OF CLOSED TIES SHOWN
18. ANCHOR BOLTS, PLATE WASHERS, NAILS AND ANY OTHER FASTENERS CONNECTING TO PRESSURE TREATED MEMBERS (MUDSILLS ETC.) SHALL BE HOT DIPPED ZINC-COATED GALVANIZED, STAINLESS STEEL, SILICON BRONZE OR COPPER.
19. ALL FOUNDATION REINFORCING, H.D.'S AND A.B.'S TO BE TIED DOWN IN PLACE PRIOR TO CALL FOR INSPECTION.
20. RE-TIGHTEN HOLDOWN'S JUST AFTER INSPECTION AND PRIOR TO COVERING PLYWOOD SHEATHING.
21. SOIL ENGINEER OF RECORD SHALL REVIEW AND APPROVE FOUNDATION PLAN AND RELATED DETAILS PRIOR CONSTRUCTION.
22. PRIOR TO REQUESTING A FOUNDATION INSPECTION BY THE CITY INSPECTOR, THE SOIL ENGINEER OF RECORD SHALL PROVIDE FIELD REPORT TO CONFIRM THE FOLLOWING: THE FOUNDATION EXCAVATION AND SUB-SOIL CONDITION IS IN GENERAL CONFORMANCE WITH SOIL REPORT AND APPROVED PLANS.
23. ~~FOR CONCRETE EXPANSION JOINTS LAYOUT, SEE A2.4.~~ 1
24. GEOTECHNICAL CONSULTANT:
    GEO-LOGIC ASSOCIATES
    16055 CAPUTO DRIVE, SUITE D
    MORGAN HILL, CA 95037
    TEL: (408) 778-2818
    ATTN: MR. CHALERM (BEESON) LIANG

## KEYNOTES:

1.C CONCRETE CURB TO BE POURED MONOLITHICALLY W/ THE TIE BEAM. VERIFY COLUMN/WALL DIMENSIONS WITH ARCHITECTURAL PLANS U.N.O. PROVIDE ABU POST BASE AT POST CONDITION. SEE DETAIL 1/5S

## LEGEND:

- L=#'-#" / 1 — DENOTES SHEAR WALL TYPE & MIN. LENGTH REQUIRED. REFER TO SHEAR WALL SCHEDULE ON THIS SHEET
- A — DENOTES KEYNOTE SPECIFICATIONS REFER TO KEYNOTE SCHEDULE ON THIS SHEET.
- DENOTES ADDITIONAL PAD FOOTING PER PLAN
- DENOTES CONCRETE SLAB ON GRADE (S.O.G.)
- DENOTES NEW (N) FOUNDATION
- DENOTES EXISTING (E) FOUNDATION
- DENOTES REMOVE EXISTING WALL/FOUNDATION
- HDUB — DENOTES HOLDOWN TYPE (SIMPSON STRONG TIE)

JOB COPY
These plans must be kept on the job at all times.
CITY OF MORGAN HILL
BUILDING DIVISION

GRAPHIC SCALE
10 0 5 10
SCALE: 1/4"=1'-0"


WESTON MILES
ARCHITECTS
17500 Depot Street, Suite #200
Morgan Hill, CA 95037
1 •408 • 779 • 6686
• Architecture • Landscape •


REGISTERED ARCHITECT DENNIS L. MILES No. 6142 Exp. 9-30-19 STATE OF CALIFORNIA

NOT VALID WITHOUT WET SIGNATURE

HD DESIGN ENGINEERING INCORP.

CONSULTANT JOB NO: 17-20

REGISTERED PROFESSIONAL ENGINEER HOE DOAN No. C 62142 Exp. 9-30-19 CIVIL STATE OF CALIFORNIA

1 PLAN CHECK + ENGINEERING REVISION 01-30-2019
2 PLAN CHECK 03-27-2019
3 SOIL ENGINEER REVIEW 04-08-2019

# FOUNDATION PLAN

## CENTENNIAL RECREATION CENTER EXPANSION PROJECT

CITY OF MORGAN HILL
171 W EDMUNDSON AVE, MORGAN HILL, CA 95037


These drawings are instruments of service and are the property of WESTON MILES ARCHITECTS, INC. All designs and other information on the drawings are for use on the specified project and shall not be used otherwise without the expressed written permission of WESTON MILES ARCHITECTS, INC.

Written dimensions on these drawings shall have precedence over scaled dimensions. Contractors shall verify and be responsible for all dimensions and conditions on the job and this office shall be notified of any variations from the dimensions and conditions shown by these drawings. Shop drawing shall be submitted to this office for approval before proceeding with fabrication.

© Copyrighted 2018


DATE: 11/09/2018

JOB NO: 18001

2S

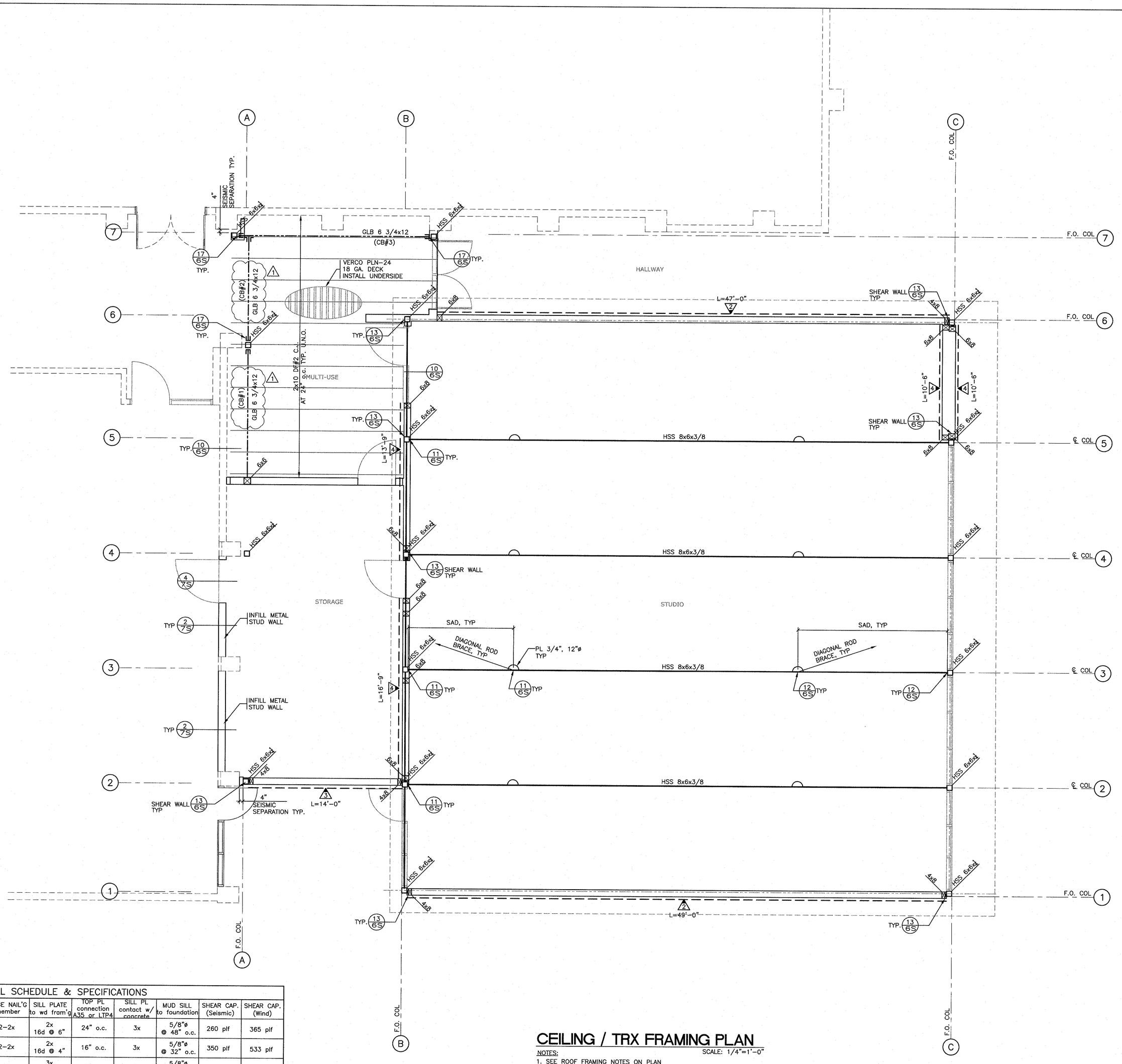


## CEILING / TRX FRAMING PLAN

SCALE: 1/4"=1'-0"

NOTES:
1. SEE ROOF FRAMING NOTES ON PLAN
2. SEE GENERAL NOTES ON SHEET 1S

## SHEAR WALL SCHEDULE & SPECIFICATIONS

| TYPE | SHEATHING | NAILING edge/field | EDGE NAIL'G member | SILL PLATE to wd fram'g | TOP PL connection A35 or LTP4 | SILL PL contact w/ concrete | MUD SILL to foundation | SHEAR CAP. (Seismic) | SHEAR CAP. (Wind) |
|---|---|---|---|---|---|---|---|---|---|
| 1 | 1/2" (32/16) EXP 1 | 10d @ 6"/12" | 2-2x | 2x 16d @ 6" | 24" o.c. | 3x | 5/8"ø @ 48" o.c. | 260 plf | 365 plf |
| 2 | 1/2" (32/16) EXP 1 | 10d @ 4"/12" | 2-2x | 2x 16d @ 4" | 16" o.c. | 3x | 5/8"ø @ 32" o.c. | 350 plf | 533 plf |
| 3 | 1/2" (32/16) EXP 1 | 10d @ 3"/12" | 4x | 3x SDS @ 8" | 12" o.c. | 3x | 5/8"ø @ 28" o.c. | 490 plf | 685 plf |
| 4 | 1/2" (32/16) STR 1 | 10d @ 2"/12" | 4x | 3x SDS @ 6" | 8" o.c. | 3x | 5/8"ø @ 24" o.c. | 640 plf | 895 plf |
| 2 2 | 1/2" (32/16) EXP 1 BOTH SIDES | 10d @ 4"/12" | 4x | 3x SDS @ 4" | 8" o.c. | 3x | 5/8"ø @ 16" o.c. | 700 plf | 1066 plf |
| 3 3 | 1/2" (32/16) EXP 1 BOTH SIDES | 10d @ 3"/12" | 4x | 3x SDS @ 3" | 6" o.c. | 3x | 5/8"ø @ 16" o.c. | 980 plf | 1370 plf |
| 4 4 | 1/2" (32/16) STR 1 BOTH SIDES | 10d @ 2"/12" | 4x | 3x SDS @ 2" | 8" o.c. EA. SIDES | 3x | 5/8"ø @ 12" o.c. | 1280 plf | 1790 plf |

SHEAR SCHEDULE NOTES:

1. USE HOT DIP GALVANIZED ANCHOR BOLTS WITH HOT DIP GALVANIZED 1/4"x3" SQUARE PLATE WASHERS AT FOUNDATION SILL PLATES.
2. "SDS" DENOTES 1/4" DIAMETER x 6" SOMPSON SDS SCREW. NOTE THAT OTHER 1/4" DIAMETER SCREWS MAY NOT BE SUBSTITUTED AT 1.1 RATIO.
3. WHERE SDS SCREWS ARE REQUIRED, PROVIDE 4x MIN RIMS AT SOLID SAWN LUMBER FRAMING AND 3 1/2" LSL MINIMUM RIM AT ENGINEERED LUMBER FRAMING.
4. RIM CLIP SPACING SHALL BE DETERMINED BY SHEAR WALL BELOW.
5. 3x SILL PLATES ARE ONLY REQUIRED WHERE APPLIED IN CONTACT WITH CONCRETE. PROVIDE 2x SOLE PLATE ABOVE WOOD FRAMING.
6. SHEATHING TO BE 4'-0" X 8'-0" MIN. EXCEPT AT BOUNDARIES OR AT CHANGE IN FRAMING. PROVIDE MIN. 2X FRAMING MEMBER AT ALL BOUNDARIES U.N.O.
7. BLOCK ALL AJOINING PLYWOOD EDGES WITH 3X LUMBER AND STAGGER NIALS (PLATES, STUDS, POST, BLOCKING, ETC.)
8. ALL NAILS LISTED ABOVE ARE COMMON NAILS OR GALVANIZED NAILS. GALVANIZED NAILS MAY BE HOT DIPPED OR TUMBLED ONLY. 8d NAIL SHALL HAVE A MINIMUM DIAMETER OF 0.131" AND 10d NAILS SHALL HAVE A MINIMUM OF 0.148"

## CEILING FRAMING NOTES:

1. 2x10 DF#2 CEILING JOIST AT 24" o.c. AT LOWER ROOF U.N.O.
2. ALL HEADER ARE 6x12 DF#2 OR 8x12 DF#2 U.N.O.
3. ALL POST ARE 6x8 DF#1 OR 4x8 DF#1 U.N.O. USE SIMPSON "CCQ" FOR POST TO BEAM CONNECTION.
4. FOR TOP PLATE SPLICE, SEE DETAIL 1/7S.
5. SILL PLATES AT ALL SHEAR WALL ARE 3x LUMBER U.N.O.
6. ALL EXTERIOR STUD WALL ARE 2x8 1.55E LP LSL (LP SOLIDSTAR) U.N.O. ON PLAN.
7. ALL LUMBER GRADE SHALL BE AS NOTED ON PLAN OR BETTER.

## LEGEND:

L=#'-#" / 1 — DENOTES SHEAR WALL TYPE & MIN. LENGTH REQUIRED. REFER TO SHEAR WALL SCHEDULE ON THIS SHEET

3.4 — DENOTES KEYNOTE SPECIFICATIONS REFER TO KEYNOTE SCHEDULE ON THIS SHEET.

JOB COPY
These plans must be kept on the job at all times.
CITY OF MORGAN HILL
BUILDING DIVISION

GRAPHIC SCALE
10 0 5 10
SCALE: 1/4"=1'-0"


WESTON MILES
ARCHITECTS
17500 Depot Street, Suite #200
Morgan Hill, CA 95037
T •408 • 779 • 6686
• Architecture • Landscape •


LICENSED ARCHITECT — LAURATE L. MILES — 9-21-19 — STATE OF CALIFORNIA

NOT VALID WITHOUT WET SIGNATURE

HD DESIGN ENGINEERING INCORP.

CONSULTANT JOB NO: 17-20

REGISTERED PROFESSIONAL ENGINEER — HUE DOAN — No. C 62142 — Exp. 9-30-19 — CIVIL — STATE OF CALIFORNIA

1 PLAN CHECK + ENGINEERING REVISION 01-30-19

# CEILING FRAMING PLAN

## CENTENNIAL RECREATION CENTER EXPANSION PROJECT

CITY OF MORGAN HILL
171 W EDMUNDSON AVE, MORGAN HILL, CA 95037


These drawings are instruments of service and are the property of WESTON MILES ARCHITECTS, INC. All designs and other information on the drawings are for use on the specified project and shall not be used otherwise without the expressed written permission of WESTON MILES ARCHITECTS, INC.

Written dimensions on these drawings shall have precedence over scaled dimensions. Contractors shall verify and be responsible for all dimensions and conditions on the job and this office shall be notified of any variations from the dimensions and conditions shown by these drawings. Shop details shall be submitted to this office for approval before proceeding with fabrication.

© Copyrighted 2018


DATE: 11/09/2018

JOB NO: 18001

3S

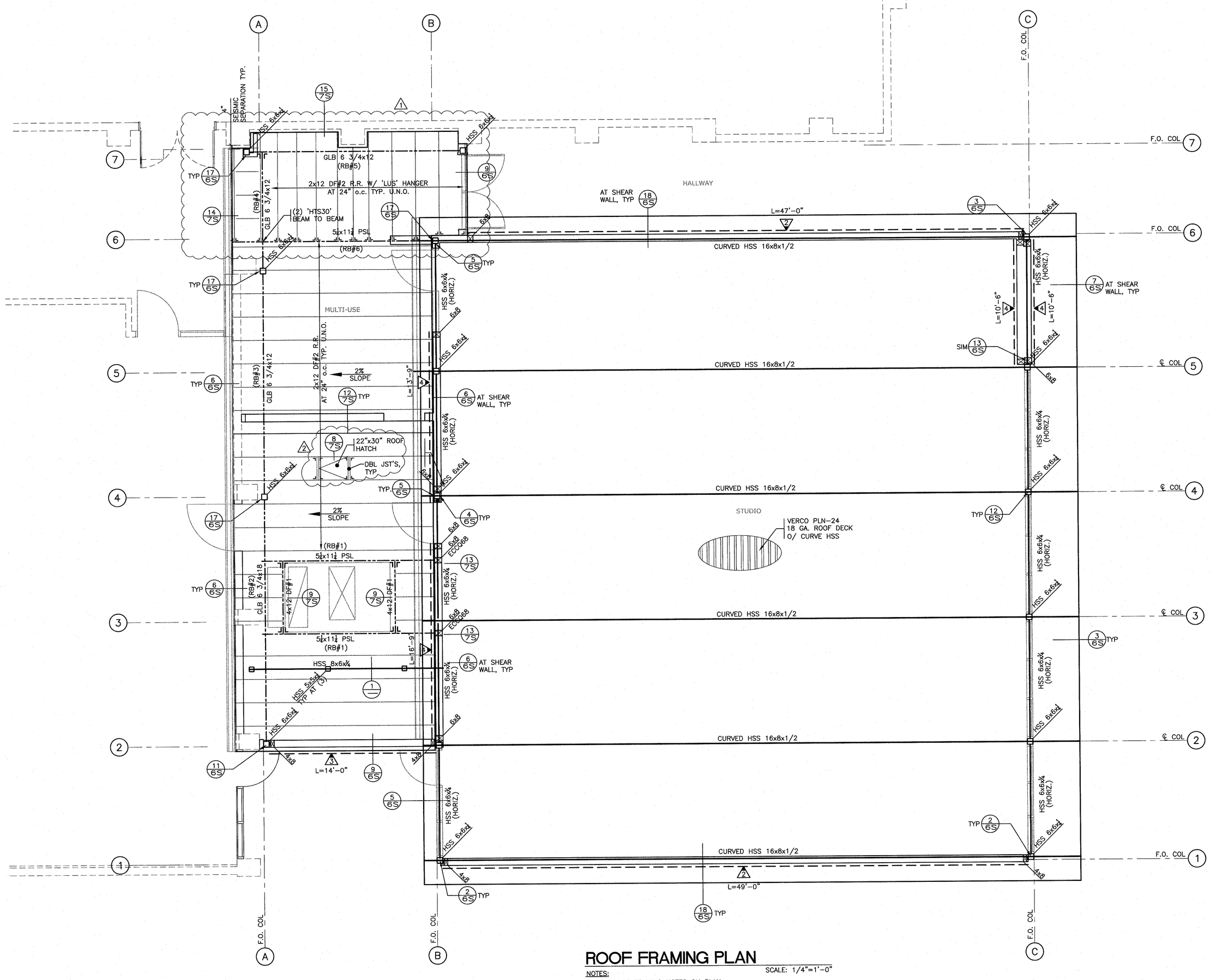


# ROOF FRAMING PLAN

SCALE: 1/4"=1'-0"

NOTES:
1. SEE ROOF FRAMING NOTES ON PLAN
2. SEE GENERAL NOTES ON SHEET 1S

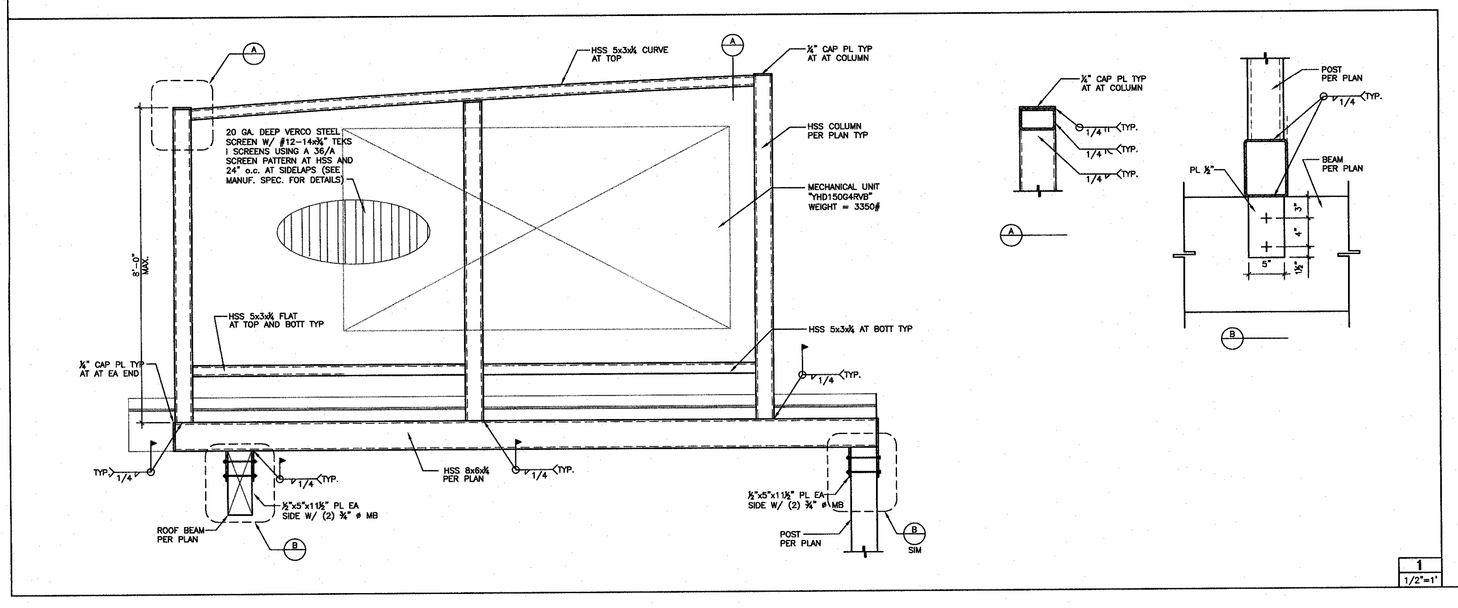


1
1/2"=1'

## ROOF DECKING SCHEDULE

| LOCATION | STEEL DECK TYPE | DECK GAGE | WELDS AT SUPPORT MEMBERS | WELDS AT PARALLEL MEMBERS | WELDS AT SIDELAPS |
|---|---|---|---|---|---|
| ALL ROOF | VERCO PLN -24 18 GA. ROOF DECK | 18ga | 1/2"ø EFFECTIVE PUDDLE WELD AT EA FLUTE | 1/2"ø EFFECTIVE PUDDLE WELD AT 12" o.c. | PUNCHLOCK AT 12" o.c. |

NOTES:
1. SEE TYPICAL DETAIL
2. CONTRACTOR TO SEAL DECK FOR WATER INTRUSION AS REQUIRED
3. INDICATE STEEL DECK DIRECTION
4. A STUD WELDED THROUGH DECK SUBSTITUTES FOR PUDDLE WELD

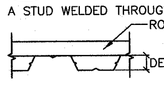


## ROOF FRAMING NOTES:

1. 2x12 DF#2 ROOF RAFTER AT 24" o.c. AT LOWER ROOF U.N.O.
2. 5/8" ROOF PLYWOOD WITH 10d NAILING @ 6" o.c. EDGE & 12" o.c. FIELD TYP. SEE ARCH DRWG'S IF REQUIRE RADIANT BARRIER PLYWOOD SHEATHING.
3. FOR ROOF OPENING. SEE DETAIL 3/7S.
4. ALL HEADER ARE 6x12 DF#2 OR 8x12 DF#2 U.N.O.
5. ALL POST ARE 6x8 DF#1 OR 4x8 DF#1 U.N.O. USE SIMPSON "CCQ" FOR POST TO BEAM CONNECTION.
6. FOR TOP PLATE SPLICE, SEE DETAIL 1/7S.
7. SILL PLATES AT ALL SHEAR WALL ARE 3x LUMBER U.N.O.
8. ALL EXTERIOR STUD WALL ARE 2x8 1.55E LP LSL (LP SOLIDSTAR) U.N.O. ON PLAN.
9. ALL LUMBER GRADE SHALL BE AS NOTED ON PLAN OR BETTER.

## LEGEND:

L=#'-#" / 1 — DENOTES SHEAR WALL TYPE & MIN. LENGTH REQUIRED. REFER TO SHEAR WALL SCHEDULE ON THIS SHEET

9.0 — DENOTES KEYNOTE SPECIFICATIONS REFER TO KEYNOTE SCHEDULE IN THIS SHEET.

JOB COPY
These plans must be kept at the job at all times.
CITY OF MORGAN HILL
BUILDING DIVISION

GRAPHIC SCALE
10 0 5 10
SCALE: 1/4"=1'-0"

WESTON MILES
ARCHITECTS
17500 Depot Street, Suite #200
Morgan Hill, CA 95037
1 • 408 • 779 • 6686
• Architecture • Landscape •

LICENSED ARCHITECT — STATE OF CALIFORNIA

NOT VALID WITHOUT WET SIGNATURE

HD DESIGN ENGINEERING INCORP.

CONSULTANT JOB NO: 17-20

REGISTERED PROFESSIONAL ENGINEER — HOU DOAN — No. C 62142 — Exp. 9-30-19 — CIVIL — STATE OF CALIFORNIA

1 PLAN CHECK + ENGINEERING REVISION 01-30-2019
2 PLAN CHECK 03-27-2019

# ROOF FRAMING PLAN

## CENTENNIAL RECREATION CENTER EXPANSION PROJECT

CITY OF MORGAN HILL
171 W EDMUNDSON AVE, MORGAN HILL, CA 95037

These drawings are instruments of service and are the property of WESTON MILES ARCHITECTS, INC. All designs and other information on the drawings are for use on the specified project and shall not be used otherwise without the expressed written permission of WESTON MILES ARCHITECTS, INC.

Written dimensions on these drawings shall have precedence over scaled dimensions. Contractors shall verify and be responsible for all dimensions and conditions on the job and this office shall be notified of any variances from the dimensions and conditions shown on these drawings. Shop details shall be submitted to this office for approval before proceeding with fabrication.

© Copyrighted 2018

DATE: 11/09/2018

JOB NO: 18001

4S

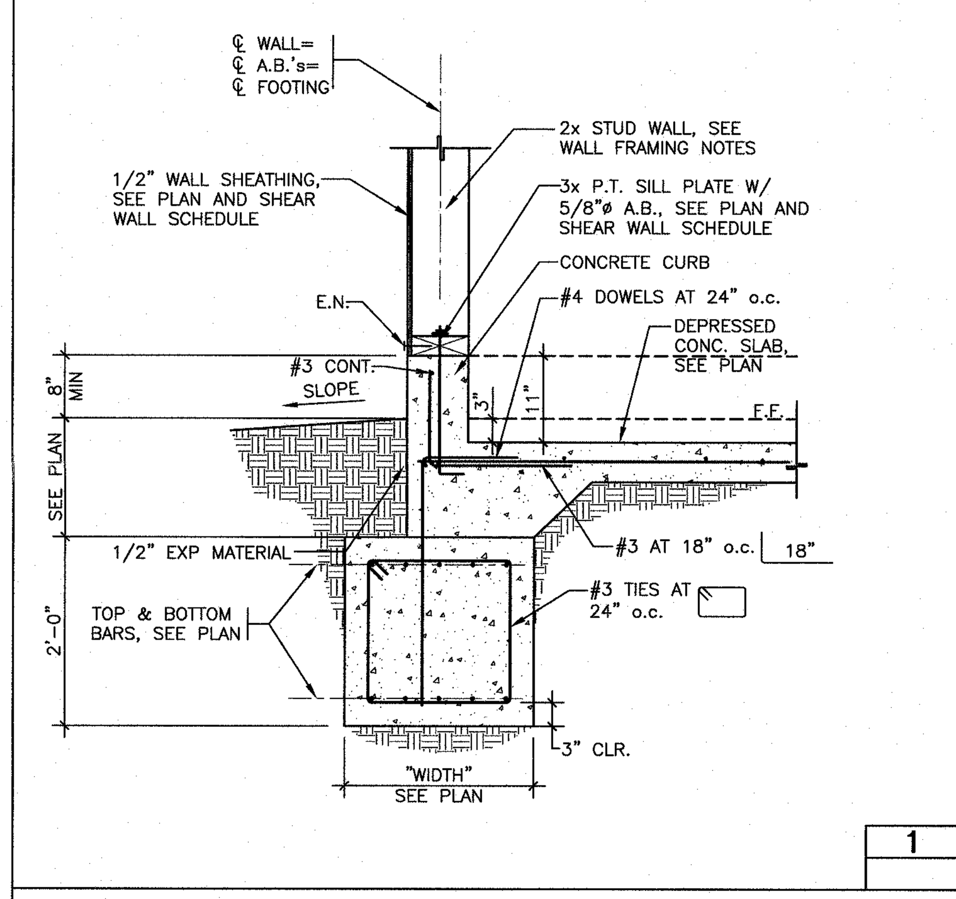

1

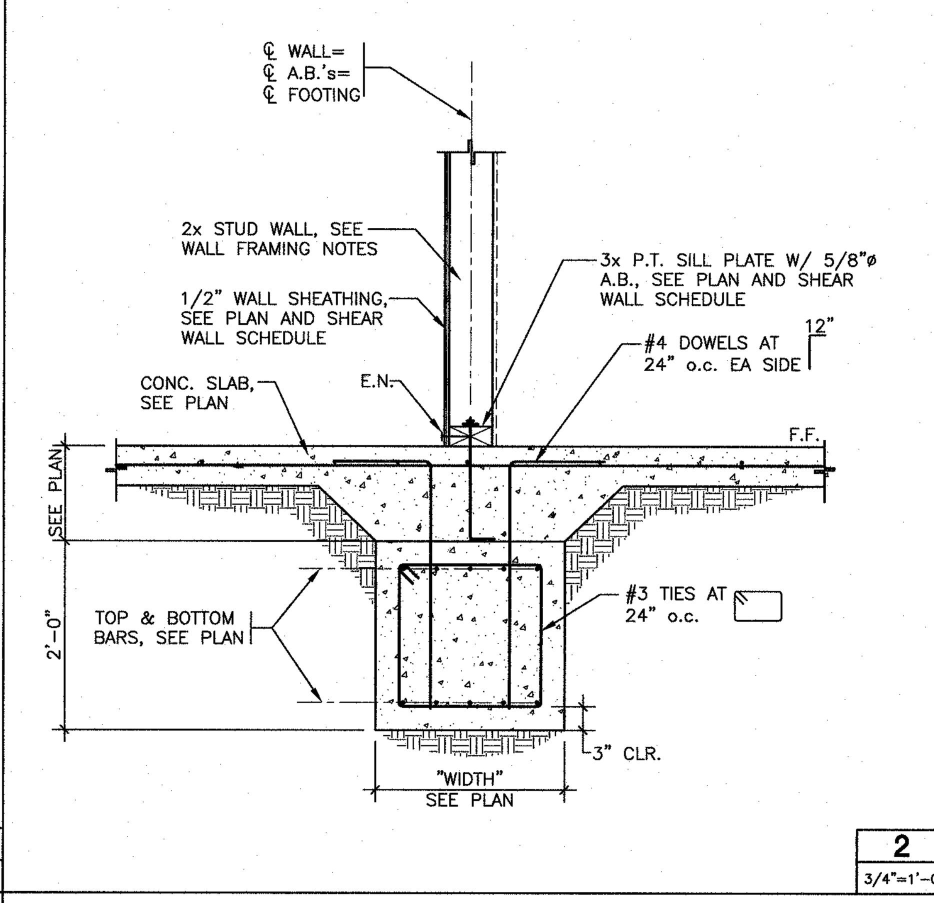

2 3/4"=1'-0"

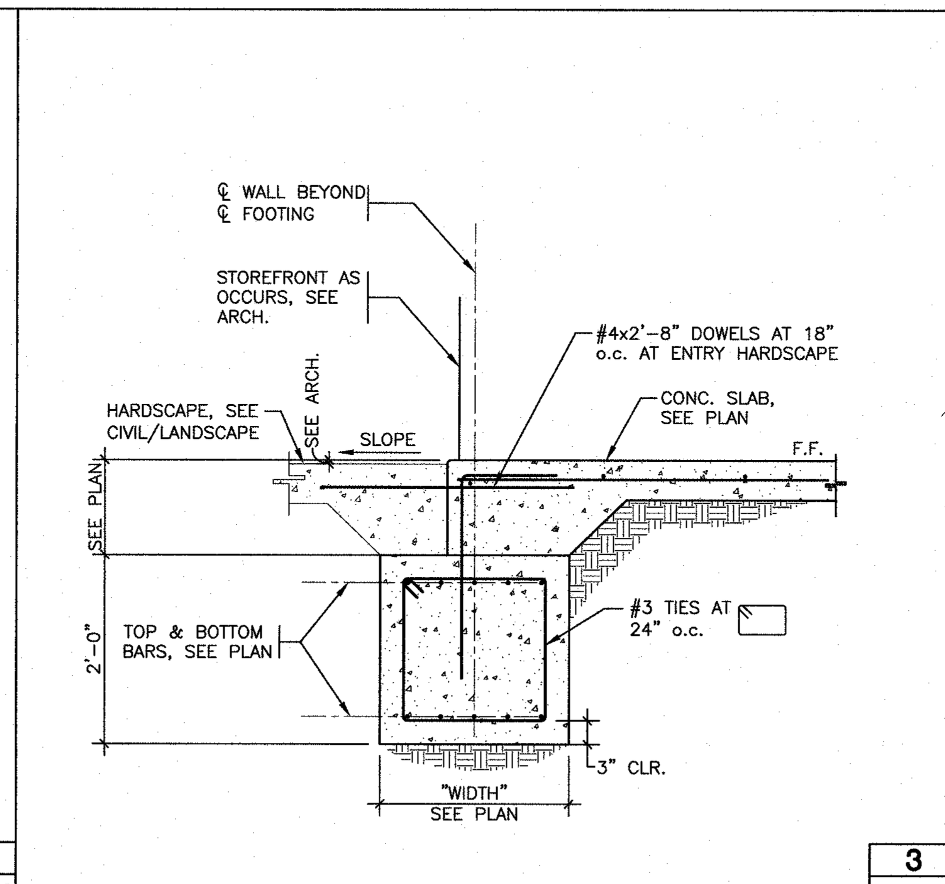

3 3/4"=1'-0"

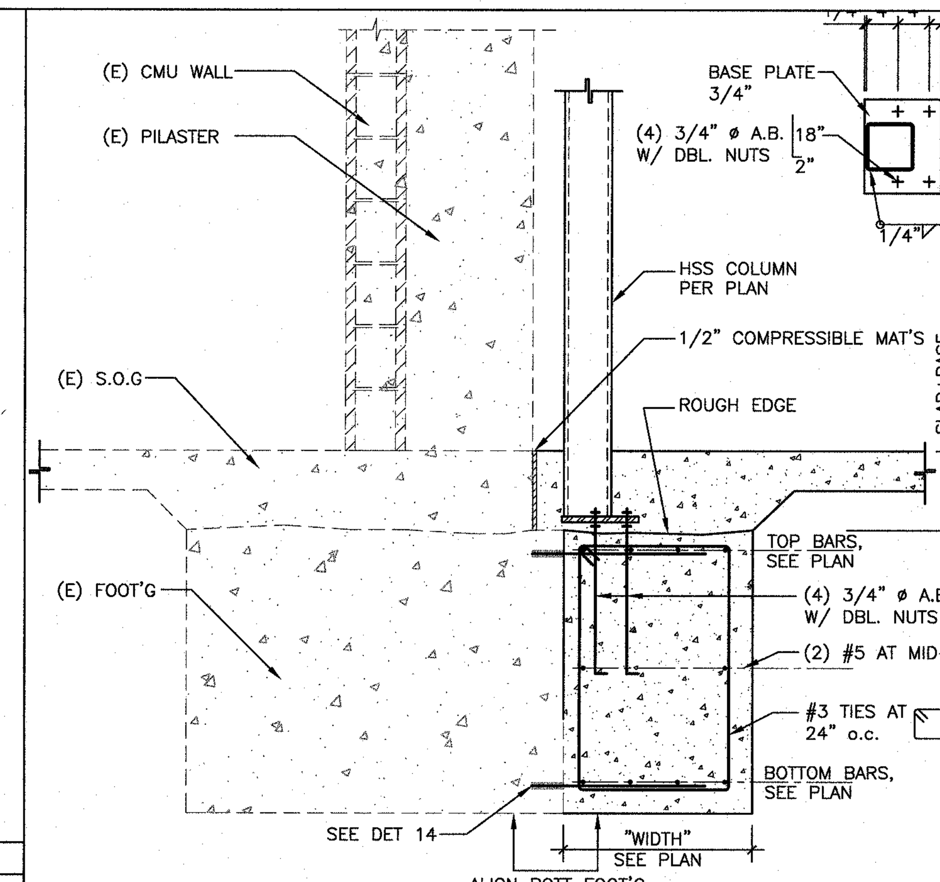

4 3/4"=1'-0"

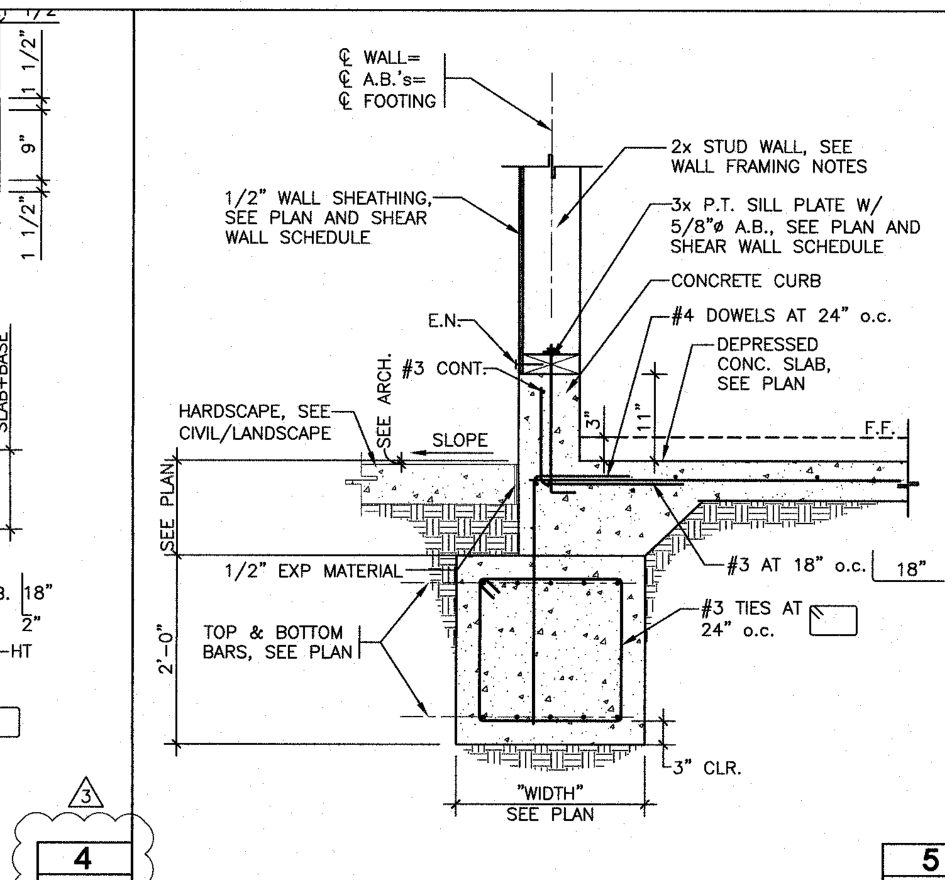

5 N.T.S.

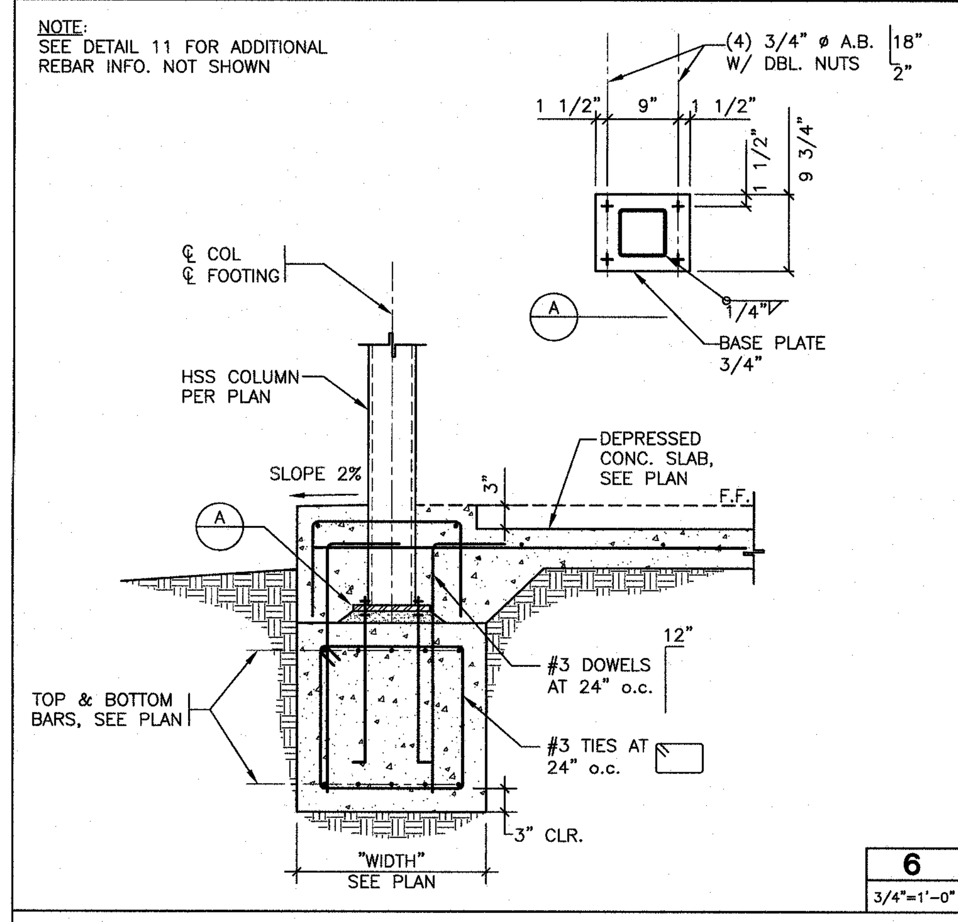

6 3/4"=1'-0"

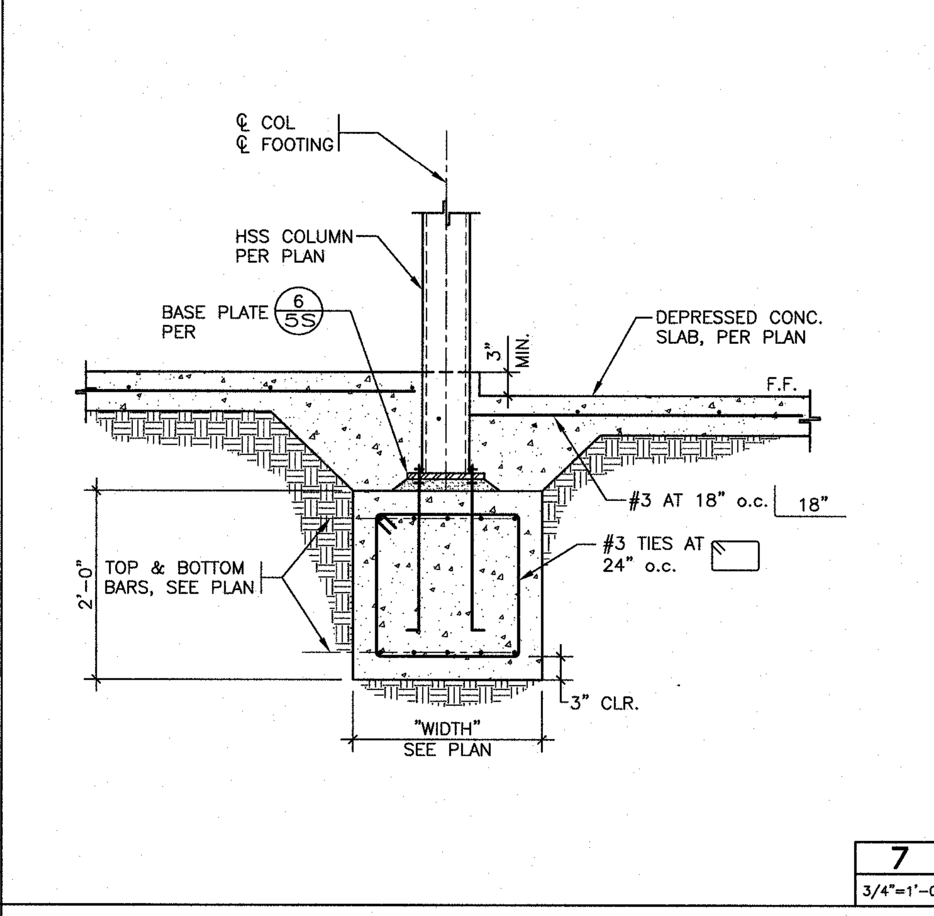

7 3/4"=1'-0"

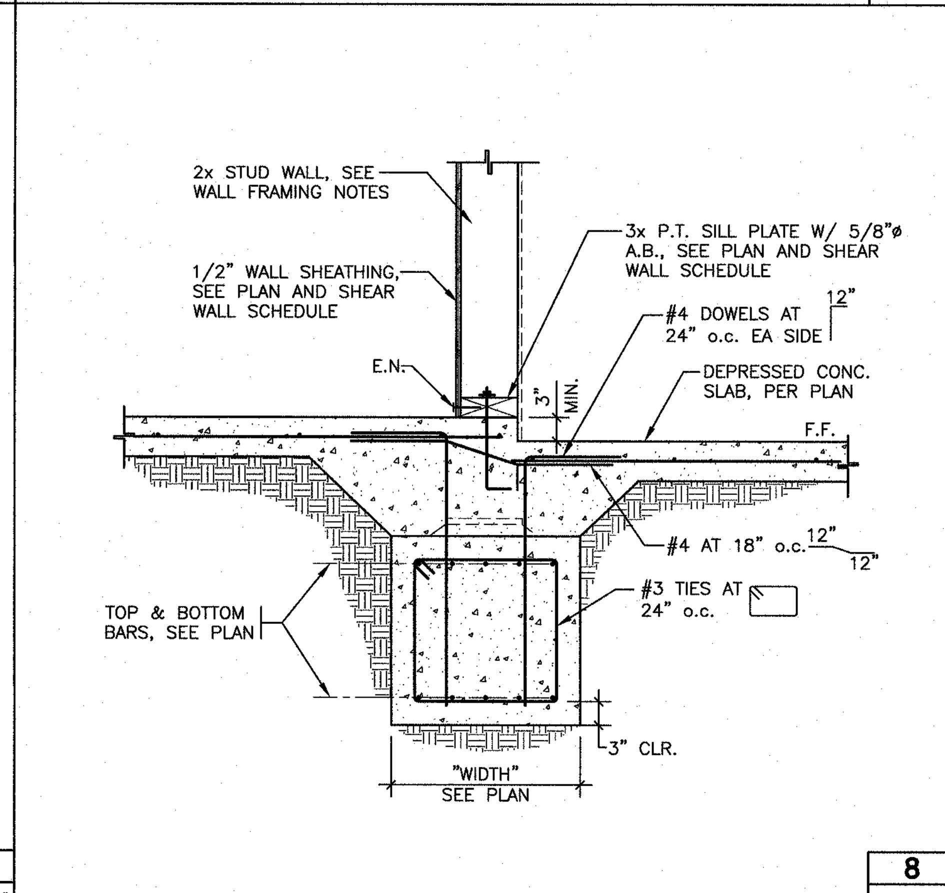

8 3/4"=1'-0"

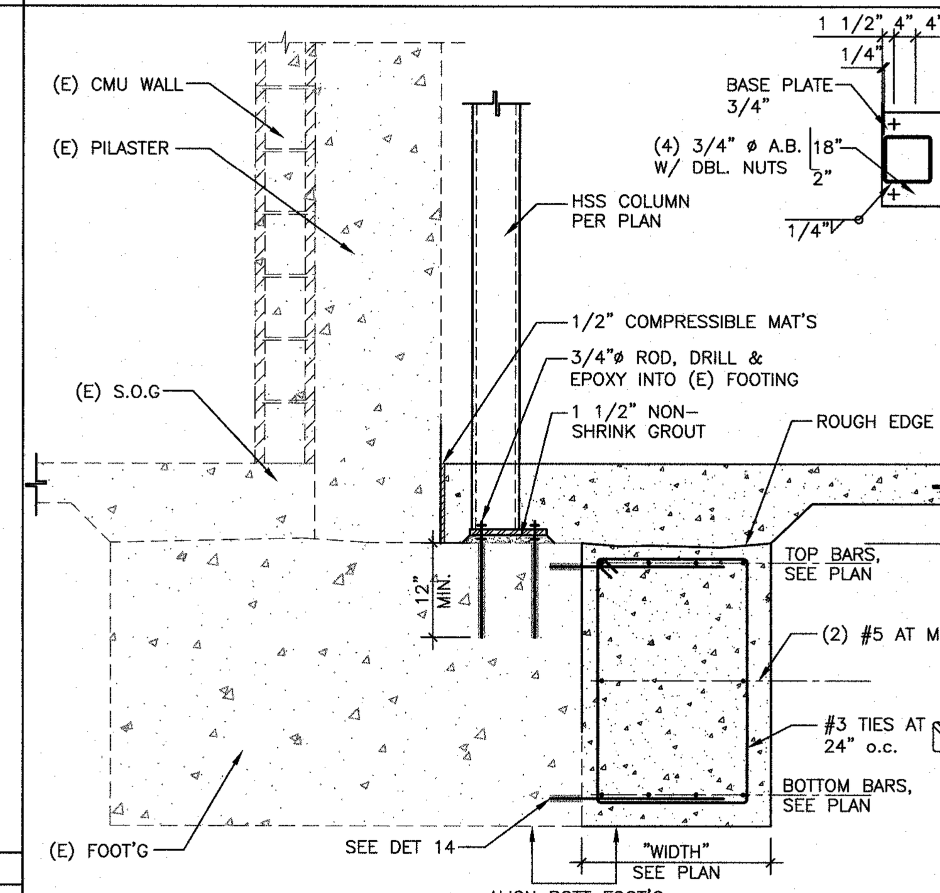

9 3/4"=1'-0"

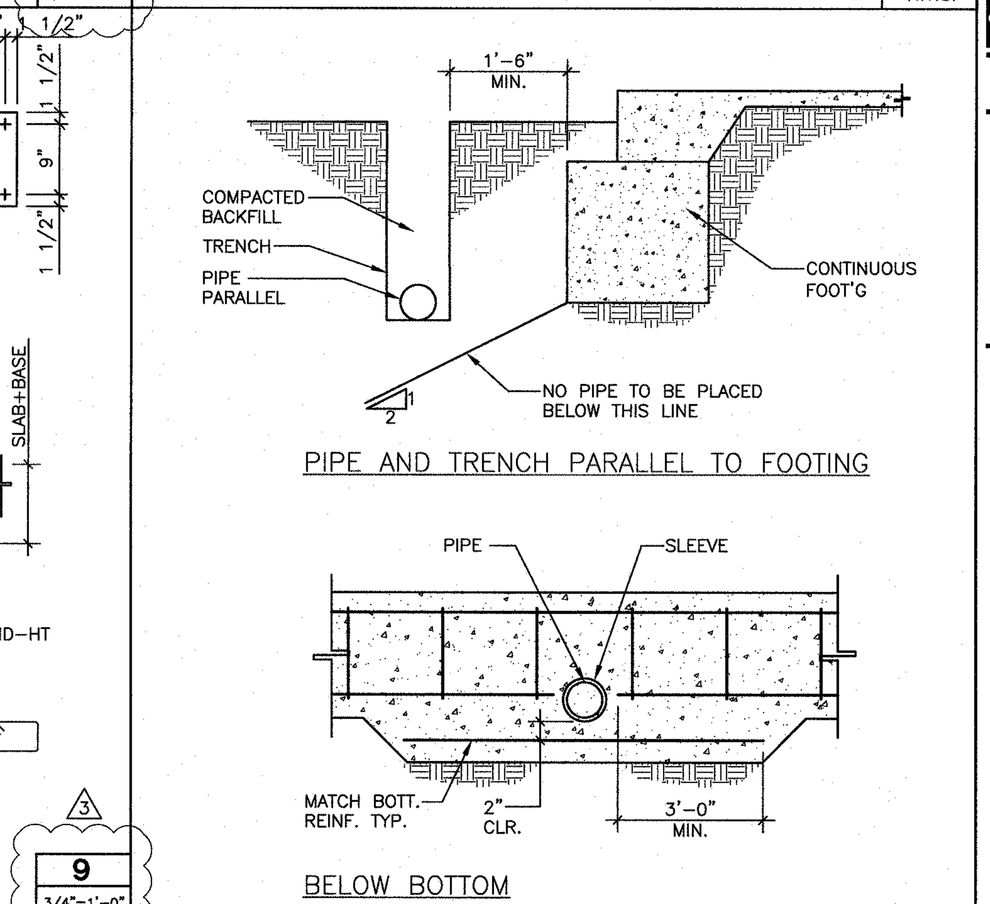


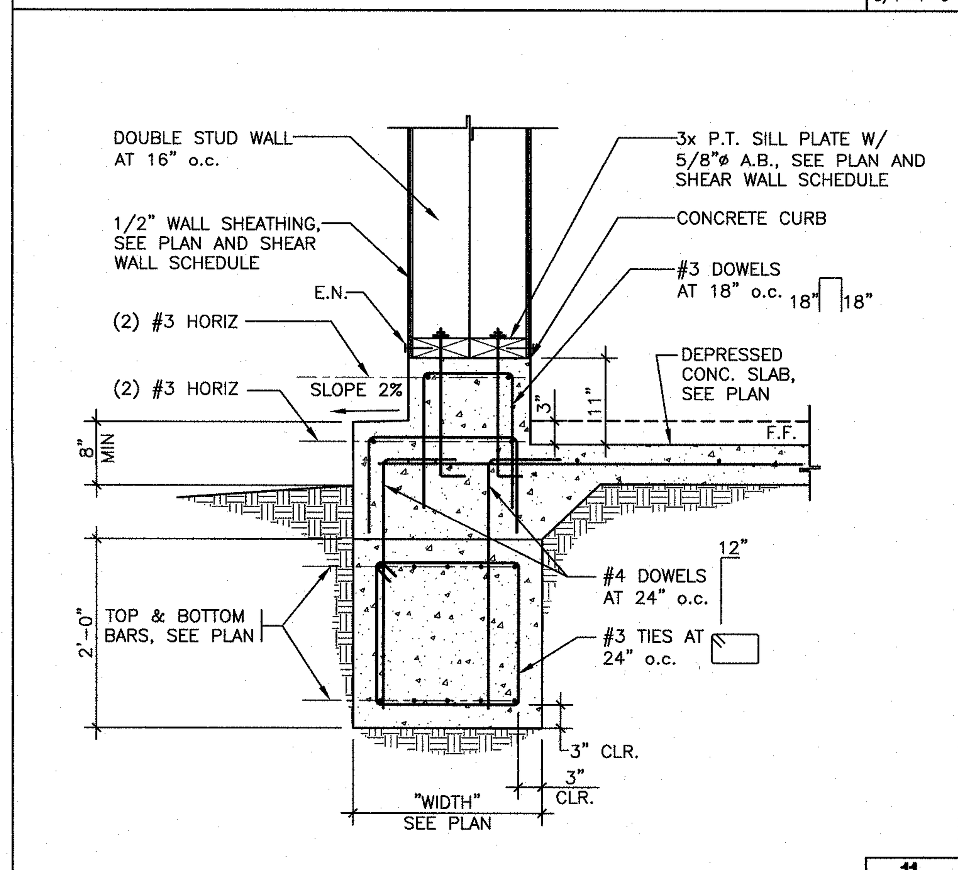

11 N.T.S.

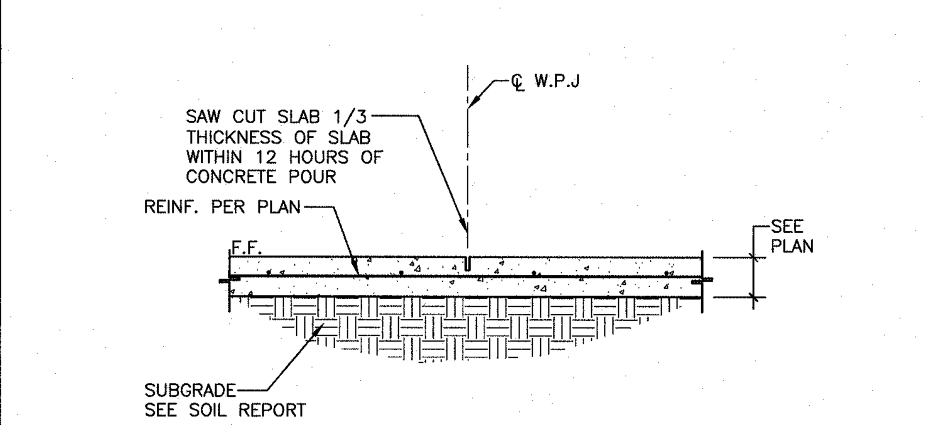

WEAKENED PLANE JOINT 12 N.T.S.

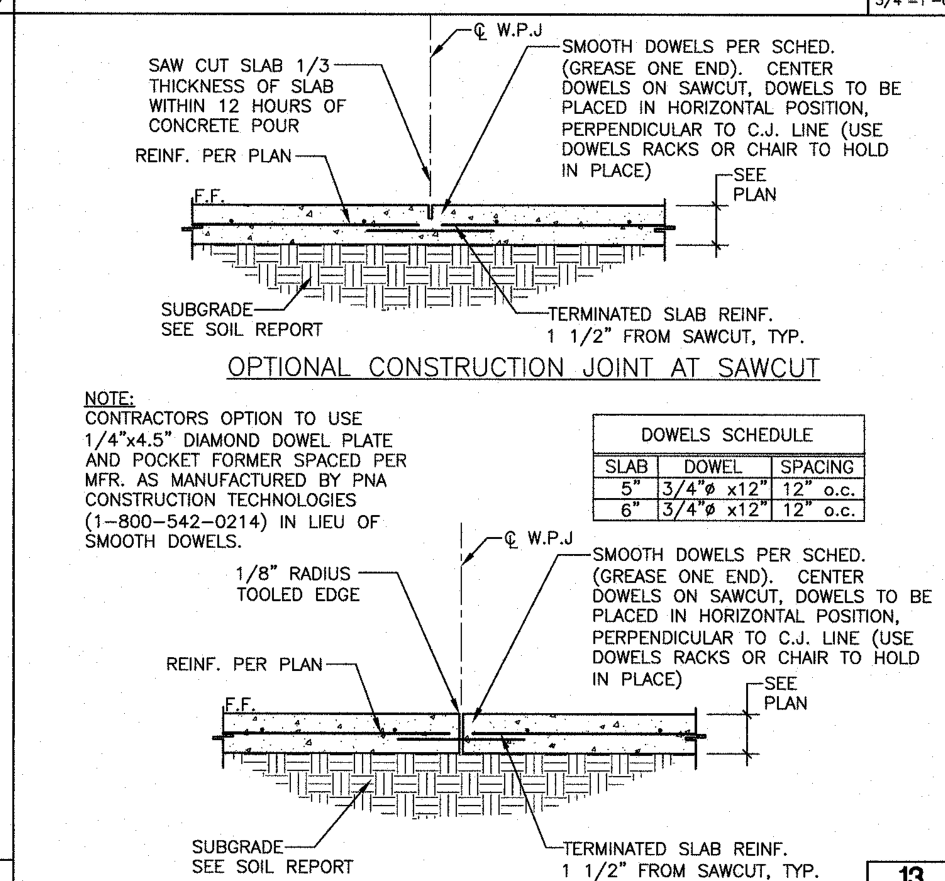


OPTIONAL CONSTRUCTION JOINT AT SAWCUT

NOTE:
CONTRACTORS OPTION TO USE 1/4"x4.5" DIAMOND DOWEL PLATE AND POCKET FORMER SPACED PER MFR. AS MANUFACTURED BY PNA CONSTRUCTION TECHNOLOGIES (1-800-542-0214) IN LIEU OF SMOOTH DOWELS.

DOWELS SCHEDULE

| SLAB | DOWEL | SPACING |
|---|---|---|
| 5" | 3/4"ø x12" | 12" o.c. |
| 6" | 3/4"ø x12" | 12" o.c. |

TYPICAL CONSTRUCTION JOINT 13 N.T.S.

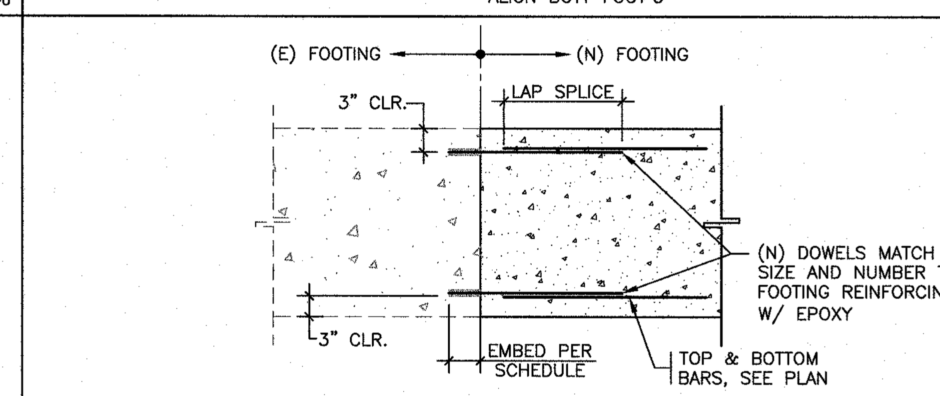


EPOXY ANCHORS
MIN. WITH f'c=2500 psi CONCRETE (NORMAL WEIGHT CONCRETE) VERIFY MINIMUM CONCRETE STRENGTH IN FIELD

| REINF. DOWEL | THREADED ROD ANCHOR | HOLE ø | MIN. EMBED. | MIN. EMBED DISTANCE | MIN. SPACING | TENSION TEST VALUE |
|---|---|---|---|---|---|---|
| #4 | 1/2" ø | 5/8" | 4" | 4 1/2" | 9" | 2,800 |
| #5 | 5/8" ø | 3/4" | 5" | 4 3/4" | 11" | 3,000 |
| #6 | 3/4" ø | 7/8" | 6" | 5 1/2" | 14" | 5,700 |
| #7 | 7/8" ø | 1" | 8" | 7" | 20" | 5,400 |
| #8 | 1" ø | 1 1/8" | 8 1/2" | 7" | 20" | 9,200 |

14 N.T.S.

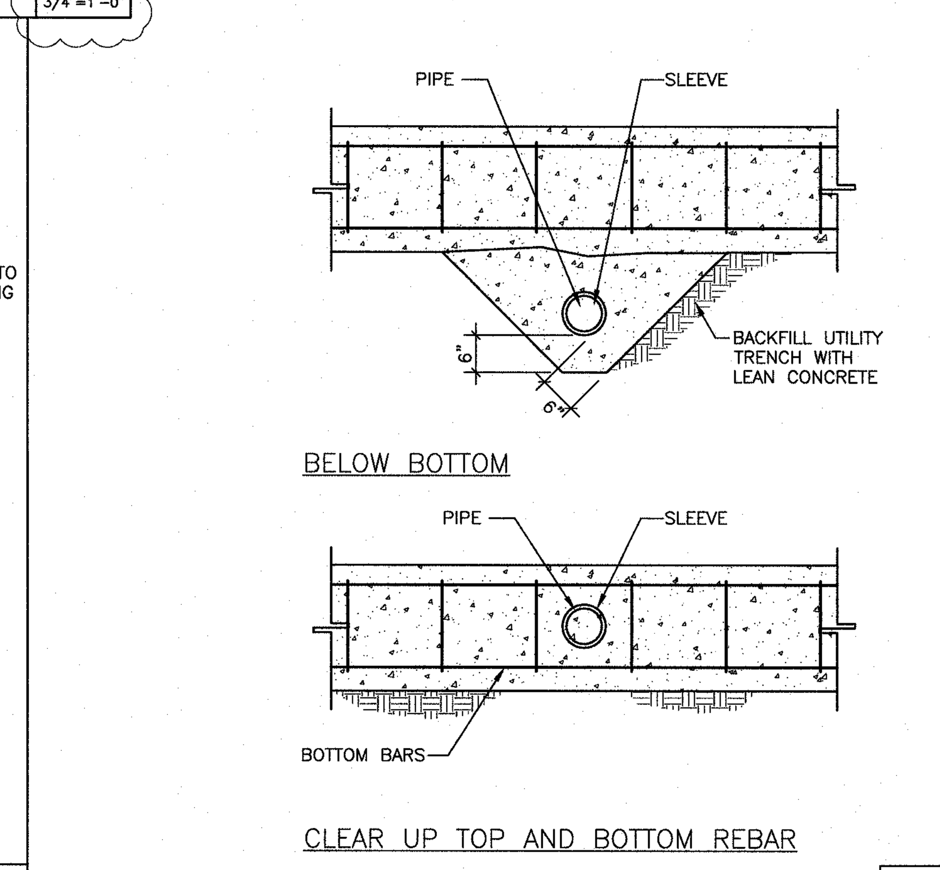

15 N.T.S.

JOB COPY
These plans must be kept on the job at all times.
CITY OF MORGAN HILL BUILDING DIVISION

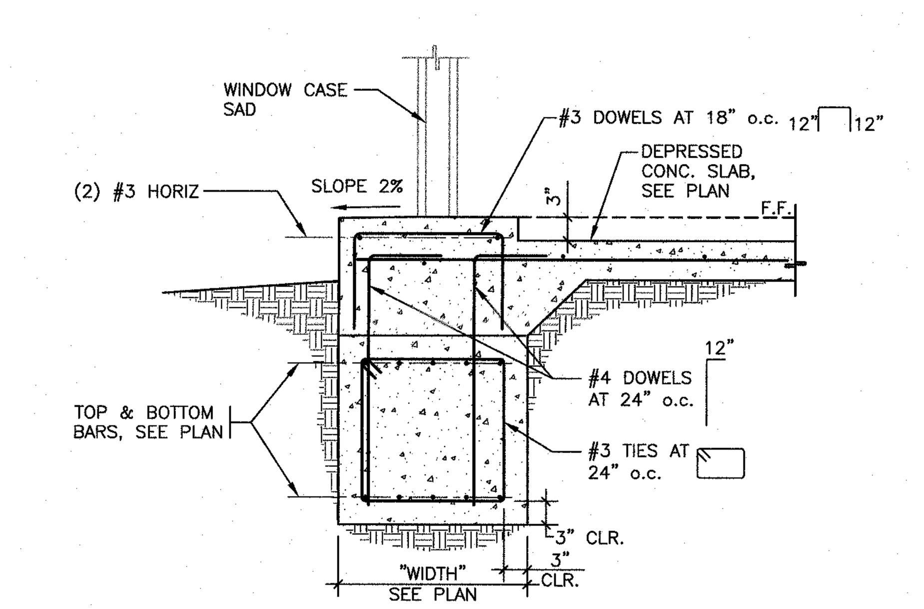

16

REINFORCEMENT BAR LAP SPLICE (Ld) FOR NORMAL WEIGHT (CLASS "B" SPLICE)

| LOCATION | CONC. F'c (psi) | STEEL Fy (ksi) | 3 | 4 | 5 | 6 | 7 | 8 | 9 | 10 | 11 |
|---|---|---|---|---|---|---|---|---|---|---|---|
| TOP | 3000 | 60 | 21 | 28 | 35 | 46 | 63 | 82 | 104 | 132 | 162 |
| OTHER | 3000 | 60 | 16 | 22 | 27 | 35 | 48 | 63 | 80 | 102 | 125 |
| TOP | 4000 | 60 | 18 | 24 | 30 | 40 | 54 | 71 | 90 | 114 | 140 |
| OTHER | 4000 | 60 | 16 | 19 | 23 | 31 | 42 | 55 | 69 | 88 | 108 |
| TOP | 5000 | 60 | 16 | 22 | 27 | 36 | 48 | 64 | 81 | 102 | 126 |
| OTHER | 5000 | 60 | 16 | 17 | 21 | 27 | 37 | 49 | 62 | 79 | 97 |
| TOP | 6000 | 60 | 16 | 20 | 25 | 33 | 44 | 58 | 74 | 93 | 115 |
| OTHER | 6000 | 60 | 16 | 16 | 19 | 25 | 34 | 45 | 57 | 72 | 88 |
| TOP | 7000 | 60 | 16 | 18 | 23 | 30 | 41 | 54 | 68 | 86 | 106 |
| OTHER | 7000 | 60 | 16 | 16 | 18 | 23 | 32 | 42 | 53 | 67 | 82 |

(Columns 3–11: BAR SIZE)

NOTE:

1. LAP LENGTHS SHOWN IN THE SCHEDULE ARE CATEGORY 3 (UNCOATED) LAP SPLICES PER THE 2002 CRSI DESIGN HANDBOOK. THE MINIMUM CONCRETE COVER MUST BE GREATER THAN db AND THE CENTER TO CENTER SPACING MUST BE GREATER THAN 3db. WHERE "db" IS THE NOMINAL BAR DIAMETER.
2. LAP SPLICE LOCATIONS SHALL BE STAGGERED AT LEAST 24".
3. TOP BARS ARE HORIZONTAL BARS WITH MORE THAN 12" OF CONCRETE BELOW THE BAR.
4. THE SMALLER LAP SPLICE LENGTH MAY BE USED WHEN TWO BARS OF DIFFERENT SIZES ARE TO BE LAPPED.
5. LAP SPLICE LENGTH SHALL BE INCREASED BY 30% FOR LIGHT WEIGHT CONCRETE.

W.W.F. – LAP SPLICE LENGTH 2" 12"

17

REINFORCEMENT BAR DEVELOPMENT LENGTH (ld) FOR NORMAL WEIGHT

| LOCATION | CONC. F'c (psi) | STEEL Fy (ksi) | 3 | 4 | 5 | 6 | 7 | 8 | 9 | 10 | 11 |
|---|---|---|---|---|---|---|---|---|---|---|---|
| TOP | 3000 | 60 | 16 | 22 | 27 | 35 | 48 | 63 | 80 | 102 | 125 |
| OTHER | 3000 | 60 | 13 | 17 | 21 | 27 | 37 | 49 | 62 | 78 | 96 |
| TOP | 4000 | 60 | 14 | 19 | 23 | 31 | 42 | 55 | 69 | 88 | 108 |
| OTHER | 4000 | 60 | 12 | 15 | 18 | 24 | 32 | 42 | 53 | 68 | 83 |
| TOP | 5000 | 60 | 13 | 17 | 21 | 27 | 37 | 49 | 62 | 79 | 97 |
| OTHER | 5000 | 60 | 12 | 13 | 16 | 21 | 29 | 38 | 48 | 61 | 74 |
| TOP | 6000 | 60 | 12 | 15 | 19 | 25 | 34 | 45 | 57 | 72 | 88 |
| OTHER | 6000 | 60 | 12 | 12 | 15 | 19 | 26 | 35 | 44 | 55 | 68 |
| TOP | 7000 | 60 | 12 | 14 | 18 | 23 | 32 | 42 | 53 | 67 | 82 |
| OTHER | 7000 | 60 | 12 | 12 | 14 | 18 | 24 | 32 | 41 | 51 | 63 |

(Columns 3–11: BAR SIZE, "ld"=DEVELOPMEN LENGTH (in))

NOTE:

1. LAP LENGTHS SHOWN IN THE SCHEDULE ARE CATEGORY 3 (UNCOATED) DEVELOPEMENT PER THE 2002 CRSI DESIGN HANDBOOK. THE MINIMUM CONCRETE COVER MUST BE GREATER THAN db AND THE CENTER TO CENTER SPACING MUST BE GREATER THAN 3db. WHERE "db" IS THE NOMINAL BAR DIAMETER.
2. TOP BARS ARE HORIZONTAL BARS WITH MORE THAN 12" OF CONCRETE BELOW THE BAR.
3. DEVELOPMENT LENGTH SHALL BE INCREASED BY 30% FOR LIGHT WEIGHT CONCRETE.

REINFORCEMENT BAR DEVELOPMENT (Ldh) FOR STANDARD HOOKS IN NORMAL WEIGHT CONCRETE GENERAL USE (NOT FOR FRAME WORK)

| CONC. F'c (psi) | STEEL Fy (ksi) | 3 | 4 | 5 | 6 | 7 | 8 | 9 | 10 | 11 |
|---|---|---|---|---|---|---|---|---|---|---|
| 3000 | 60 | 6 | 8 | 10 | 12 | 14 | 16 | 18 | 20 | 22 |
| 4000 | 60 | 6 | 7 | 9 | 10 | 12 | 14 | 15 | 17 | 19 |
| 5000 | 60 | 6 | 7 | 8 | 9 | 11 | 12 | 14 | 15 | 17 |
| 6000 | 60 | 6 | 7 | 7 | 8 | 10 | 11 | 13 | 14 | 16 |
| 7000 | 60 | 6 | 7 | 7 | 8 | 9 | 10 | 12 | 14 | 15 |

(Columns 3–11: BAR SIZE, "Ldh"=DEVELOPMEN LENGTH (in))

NOTE:

1. SIDE COVER MUST BE GREATER THAN OR EQUAL TO 2½".
2. END COVER MUST BE GREATER THAN OR EQUAL TO 2"
3. HOOK DEVELOPMENT LENGTH SHALL BE INCREASED BY 30% FOR LIGHT WEIGHT CONCRETE.

19

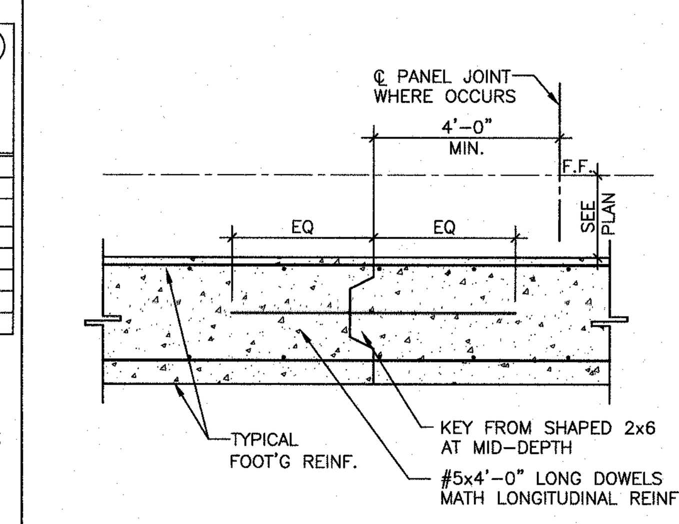

CONTINUOUS FOOTING AND CONCRETE SLAB CONSTRUCTION JOINT 19

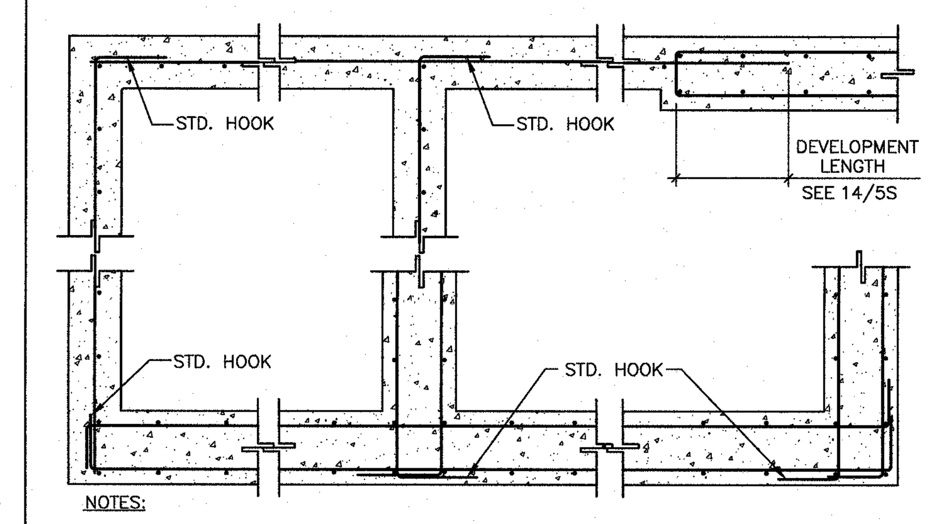


NOTES:

1. SPLICE HORIZONTAL REINFORCING BARS, WHERE REQ'D, USING "TOP BAR" LAP SPLICES, PER 17/5S
2. STANDARD HOOK MINIMUM, TURN DOWNWARD IF REQUIRED FOR FIT, TYPICAL

CORNER / INTERSECTION REINF. SPLICE, TYPICAL 20 N.T.S.

WESTON MILES ARCHITECTS
17500 Depot Street, Suite #200
Morgan Hill, CA 95037
1 • 408 • 779 • 6686
• Architecture • Landscape •

LICENSED ARCHITECT LESLEY L. MILES No. C26,468 RENEWAL 9-30-19 STATE OF CALIFORNIA
NOT VALID WITHOUT WET SIGNATURE

HD DESIGN ENGINEERING INCORP.
CONSULTANT JOB NO: 17-20

REGISTERED PROFESSIONAL ENGINEER HOC DOAN No. C 62142 Exp. 9-30-19 CIVIL STATE OF CALIFORNIA

1 PLAN CHECK + ENGINEERING REVISION 01-30-2019
2 PLAN CHECK 03-27-2019
3 SOIL ENGINEER REVIEW 04-08-2019

# FOUNDATION DETAILS

## CENTENNIAL RECREATION CENTER EXPANSION PROJECT

CITY OF MORGAN HILL
171 W EDMUNDSON AVE, MORGAN HILL, CA 95037

These drawings are instruments of service and are the property of WESTON MILES ARCHITECTS, INC. All designs and other information on the drawings are for use on the specified project and shall not be used otherwise without the expressed written permission of WESTON MILES ARCHITECTS, INC.
Written dimensions on these drawings shall have precedence over scaled dimensions. Contractors shall verify and be responsible for all dimensions and conditions on the job and this office shall be notified of any variations from the dimensions and conditions shown by these drawings. Shop details shall be submitted to this office for approval before proceeding with fabrication.
© Copyrighted 2018

DATE: 11/09/2018
JOB NO: 18001

5S

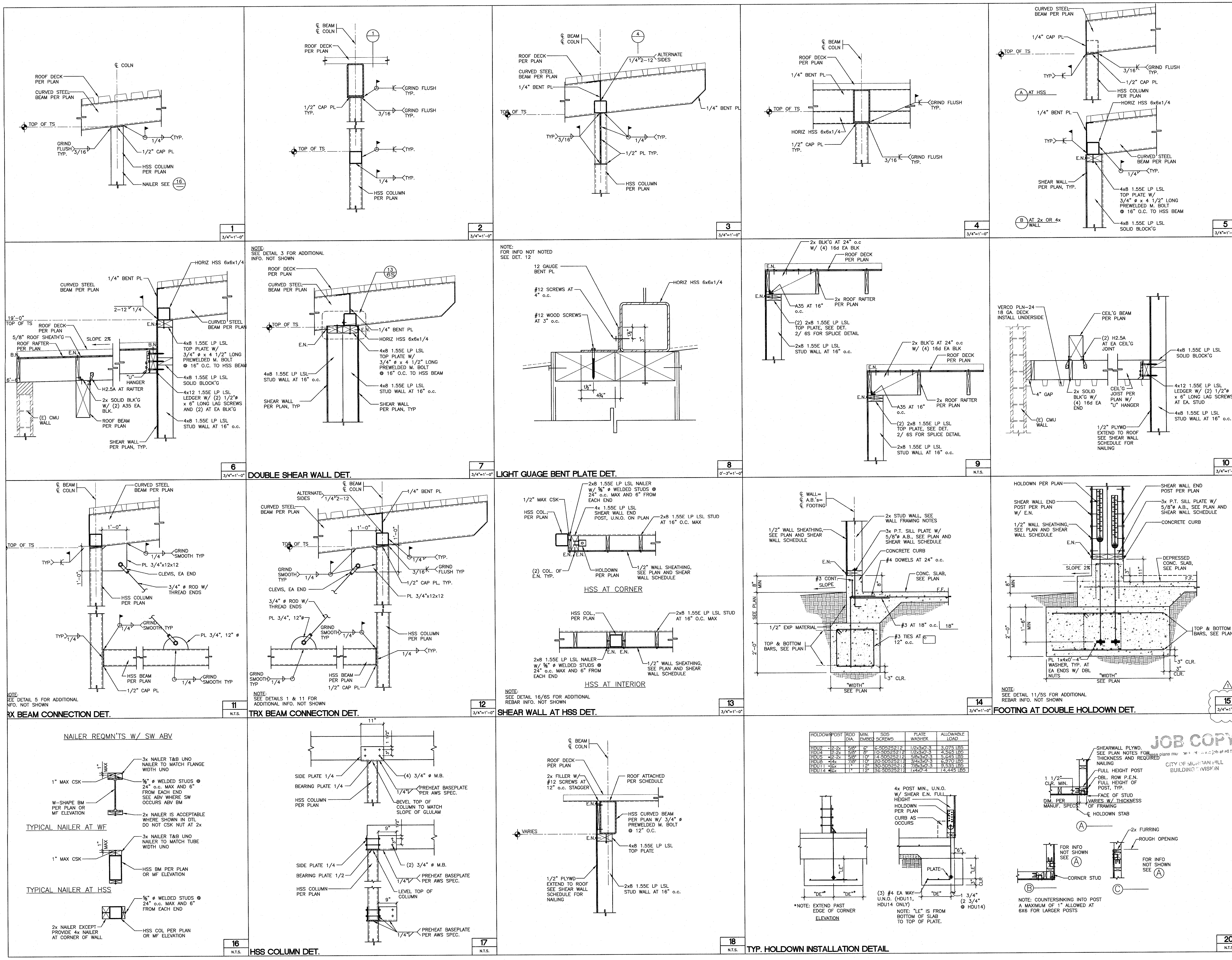


| HOLDOWN | POST | ROD DIA. | MIN. EMBED | SDS SCREWS | PLATE WASHER | ALLOWABLE LOAD |
|---|---|---|---|---|---|---|
| HDU2 ▲ | 2-2x | 5/8" | 6" | 6-SDS25212 | 1/2x3x0'-3 | 3,075 LBS |
| HDU4 | 2-2x | 5/8" | 8" | 10-SDS25212 | 1/2x3x0'-3 | 4,565 LBS |
| HDU5 ● | 2-2x | 5/8" | 10" | 14-SDS25212 | 5/8x3x0'-3 | 5,645 LBS |
| HDU8 ● | 4x | 7/8" | 10" | 20-SDS25212 | 3/4x3x0'-3 | 6,970 LBS |
| HDU11 ■ | 6x | 1" | 12" | 30-SDS25212 | 7/8x3x0'-3 | 9,535 LBS |
| HDU14 ★ | 6x | 1" | 12" | 36-SDS25212 | 1x4x0'-4 | 14,445 LBS |


WESTON MILES
ARCHITECTS
17500 Depot Street, Suite #200
Morgan Hill, CA 95037
1 • 408 • 779 • 6686
• Architecture • Landscape •
NOT VALID WITHOUT WET SIGNATURE
HD DESIGN ENGINEERING INCORP.
CONSULTANT JOB NO: 17-20


PLAN CHECK + ENGINEERING REVISION 01-30-19

# FRAMING DETAILS

## CENTENNIAL RECREATION CENTER EXPANSION PROJECT

CITY OF MORGAN HILL
171 W EDMUNDSON AVE, MORGAN HILL, CA 95037


These drawings are instruments of service and are the property of WESTON MILES ARCHITECTS, INC. All designs and other information on the drawings are for use on the specified project and shall not be used otherwise without the expressed written permission of WESTON MILES ARCHITECTS, INC.

Written dimensions on these drawings shall have precedence over scaled dimensions. Contractors shall verify and be responsible for all dimensions and conditions on the job and this office shall be notified of any variations from the dimensions and conditions shown by these drawings. Shop details shall be submitted to this office for approval before proceeding with fabrication.

© Copyrighted 2018


DATE: 11/09/2018

JOB NO: 18001

6S

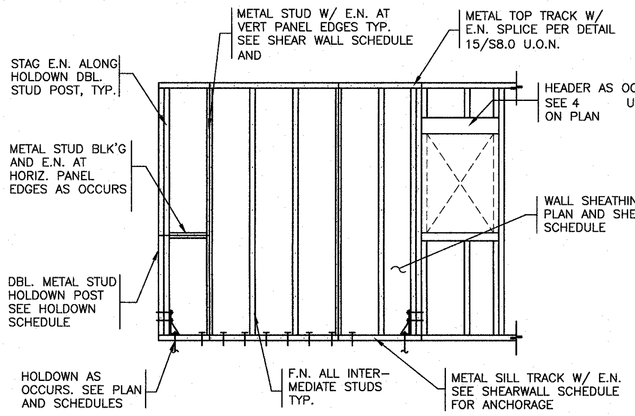


## METAL SHEAR WALL NOTES:

1. SPACE SCREWS AT 12" o.c. ALONG INTERMEDIATE FRAMING MEMBERS.
2. BLOCK ALL HORIZONTAL PANEL EDGES WITH METAL STUD BLOCKING MATCH STUD GAGE.
3. APPLY SCREWS TO ALL STUDS, TOP AND BOTTOM PLATES AND BLOCKING.
4. METAL STUD SPACING TO BE 16" o.c. MAX.
5. SCREWS SHALL BE DRIVEN FLUSH WITH SURFACE OF SHEATHING.
6. EXTEND SHEATHING PAST INTERSECTING WALLS TO END OF WALL OR WINDOW/DOOR OPENING, U.O.N.
7. SEE SHEAR WALL ELEVATION FOR TYP. SHEAR WALL CONSTRUCTION.
8. ANCHOR BOLT WASHER SHALL BE PL 3/16x2x0'-2 TYP., U.O.N.

METAL STUD WALL FRAMING — 2 — N.T.S.

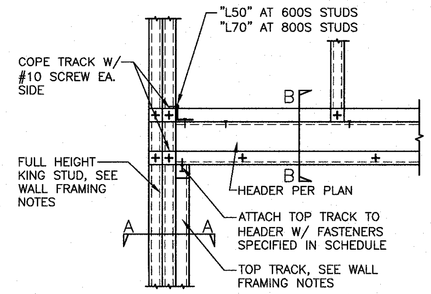


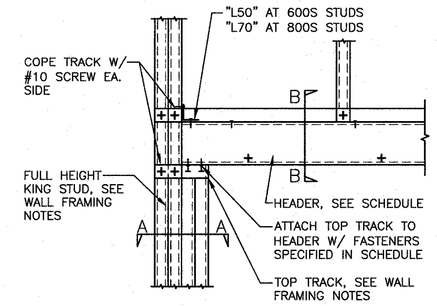


BEARING WALL HEADER SCHEDULE

| MAX. OPENING | HEADER SIZE | SECTION B-B | POST TRIM SIZE | POST KING SIZE | SECTION B-B | TOP TRACK FASTENERS TO HEADER |
|---|---|---|---|---|---|---|
| 8'-0" | (2) 800S250-68 | #10 SCREWS AT 12" o.c. TYP. / METAL STUD HEADER / #10 SCREWS AT 12" o.c. TYP. / 800T200-97 | (2) 800S162-43 | (2) 800S162-43 | FULL HEIGHT KING STUDS AS OCCURS / TRIM STUD / (2) ROWS #10 SCREWS AT 12" o.c. STAG., TYP. / E.N. | (2) #10 SCREWS |
| 11'-0" | (2) 1200S250-97 | | (2) 800S162-43 | (4) 800S162-43 | | |

BEARING WALL HEADER DETAIL — 4 — N.T.S.

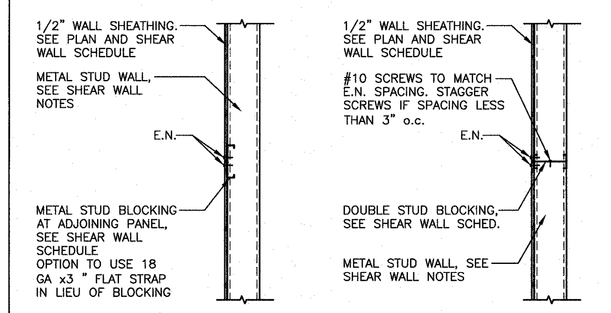


SHEAR WALL SHEATHING SPLICED AT SINGLE BLOCK

SHEAR WALL SHEATHING SPLICED AT DOUBLE BLOCK

5 — N.T.S.

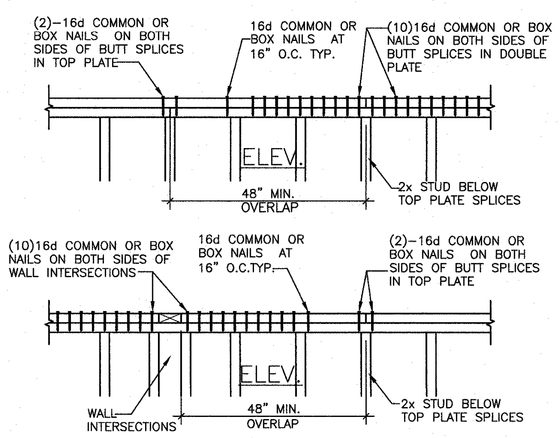


TYP. TOP PLATE SPLICE AT EXTERIOR + SHEAR WALLS — 6 — N.T.S.

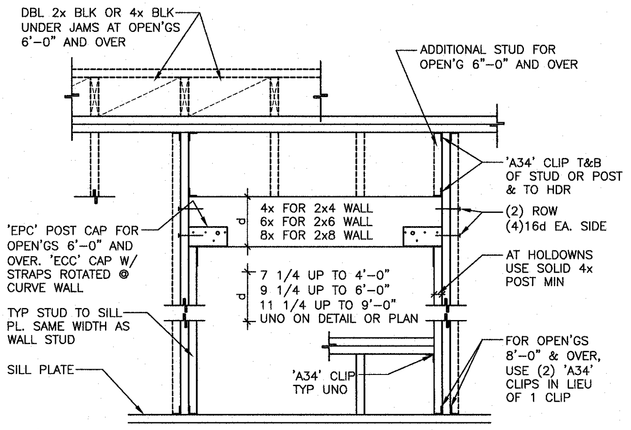


TYP. FRAME WALL OPENING — 7 — N.T.S.

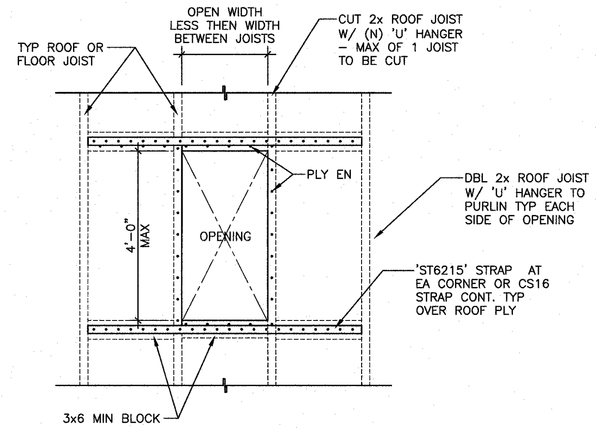


OPEN'G THR ROOF PLYWOOD — 8 — N.T.S.

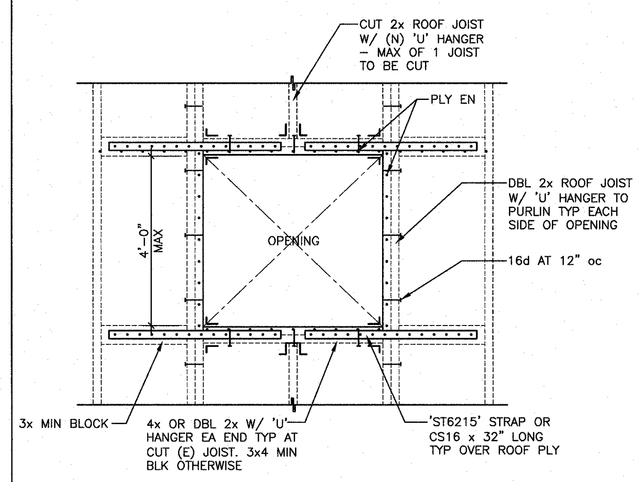


OPEN'G THR ROOF PLYWOOD - ONE JOIST CUT - MAX — 9 — N.T.S.

10 — N.T.S.

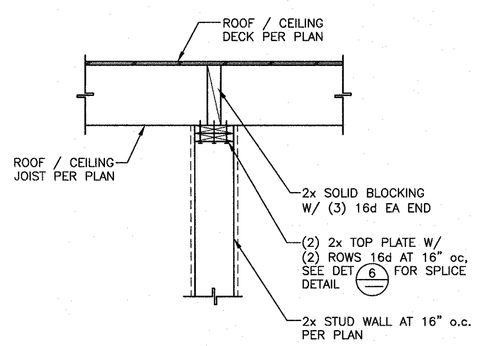


ROOF/CEILING JOIST TO PERPECDICULAR TO WALL

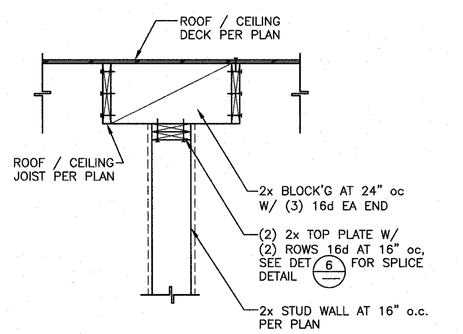


ROOF / CEILING JOIST TO PARALLEL TO WALL

NON-BEARING WALL DET. — 12 — N.T.S.

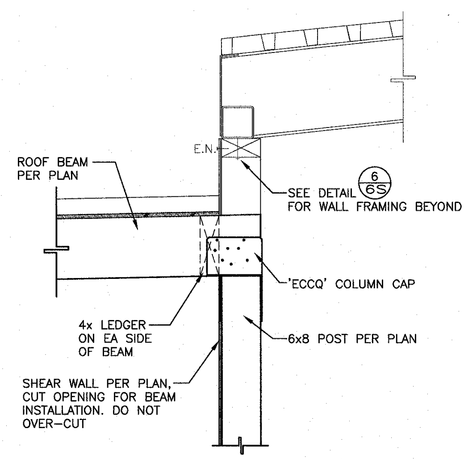


ROOF BEAM AT WALL DET. — 13 — N.T.S.

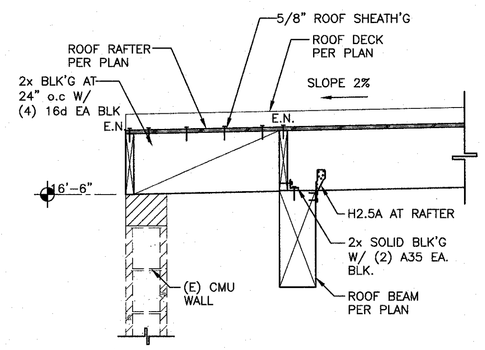


(N) ROOF TO (E) WALL DET. — 14 — N.T.S.

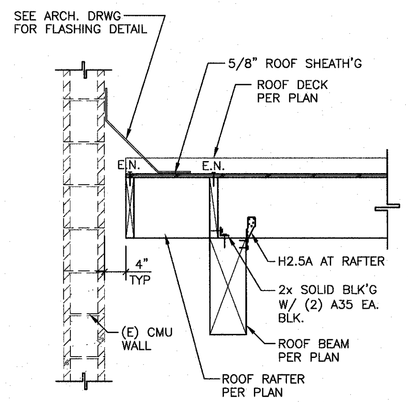


4" SEISMIC SEPARATION DET. — 15 — N.T.S.

16 — N.T.S.

17 — N.T.S.

18 — N.T.S.

19 — N.T.S.

20 — N.T.S.

JOB COPY
These plans must be kept on the job at all times.
CITY OF MORGAN HILL
BUILDING DIVISION

WESTON MILES
ARCHITECTS
17500 Depot Street, Suite #200
Morgan Hill, CA 95037
T • 408 • 779 • 6686
• Architecture • Landscape •

REGISTERED ARCHITECT — NICHOLAS L. MILES — No. C-19789 — STATE OF CALIFORNIA

NOT VALID WITHOUT WET SIGNATURE

HD DESIGN ENGINEERING INCORP.

CONSULTANT JOB NO: 17-20

REGISTERED PROFESSIONAL ENGINEER — HOI DOAN — No. C 62142 — Exp. 9-30-19 — CIVIL — STATE OF CALIFORNIA

1 PLAN CHECK + ENGINEERING REVISION 01-30-19

# FRAMING DETAILS

## CENTENNIAL RECREATION CENTER EXPANSION PROJECT

CITY OF MORGAN HILL
171 W EDMUNDSON AVE, MORGAN HILL, CA 95037

These drawings are instruments of service and are the property of WESTON MILES ARCHITECTS, INC. All designs and other information on the drawings are for use on the specified project and shall not be used otherwise without the expressed written permission of WESTON MILES ARCHITECTS, INC.

Written dimensions on these drawings shall have precedence over scaled dimensions. Contractors shall verify and be responsible for all dimensions and conditions on the job and this office shall be notified of any variations from the dimensions and conditions shown on these drawings. Shop details shall be submitted to this office for approval before proceeding with fabrication.

© Copyrighted 2018

DATE: 11/09/2018

JOB NO: 18001

7S

## MECHANICAL NOTES & SPECIFICATIONS

1. THESE DRAWINGS AND NOTES SHALL BE READ IN CONJUNCTION WITH AND BE CONSIDERED TO BE PART OF A SEPARATE AND COMPLETE MECHANICAL SPECIFICATION.
2. ENTIRE INSTALLATION SHALL CONFORM TO THE REQUIREMENTS OF ALL APPLICABLE CODES AND REGULATIONS, INCLUDING:
   - 2.1. 2016 CALIFORNIA BUILDING CODE
   - 2.2. 2016 CALIFORNIA PLUMBING CODE
   - 2.3. 2016 CALIFORNIA ELECTRICAL CODE
   - 2.4. 2016 CALIFORNIA MECHANICAL CODE
   - 2.5. 2016 CALIFORNIA GREEN BUILDING STANDARD
   - 2.6. 2016 CALIFORNIA ENERGY CODE
   - 2.7. 2016 CALIFORNIA FIRE CODE
3. CONTRACTOR SHALL OBTAIN AND PAY FOR ALL REQUIRED FEES, PERMITS AND INSPECTIONS.
4. COORDINATE ENTIRE INSTALLATION OF THE HVAC SYSTEM(S) WITH THE WORK OF ALL OTHER TRADES PRIOR TO ANY FABRICATION OR INSTALLATION. PROVIDE ALL FITTINGS, OFFSETS, AND TRANSITIONS AS REQUIRED FOR A COMPLETE AND WORKABLE INSTALLATION. THE MECHANICAL CONTRACTOR SHALL BE RESPONSIBLE TO COORDINATE ITEMS TO BE PROVIDED BY OTHER TRADES WHERE MENTIONED IN THE CONTRACT DOCUMENTS PRIOR TO BID - NO EXCEPTIONS. THEY SHALL BE RESPONSIBLE FOR A COMPLETE WORKING SYSTEM PER CONTRACT DOCUMENTS.
5. COORDINATE ALL WORK WITH THE ARCHITECTURAL, STRUCTURAL DRAWINGS AND DRAWINGS OF OTHER TRADES. INSTALL ALL WORK TO CLEAR NEW AND EXISTING ARCHITECTURAL WORK, STRUCTURAL MEMBERS AND WORK OF OTHER TRADES. NO ITEM SUCH AS PIPE, DUCT, ETC. SHALL BE IN CONTACT WITH ANY EQUIPMENT. ANY ERRORS, OMISSIONS, DISCREPANCIES, DEFICIENCIES, OR CONFLICTS SHALL BE BROUGHT TO THE ATTENTION OF THE GENERAL CONTRACTOR, THE ARCHITECT AND THE ENGINEER PRIOR TO PROCEEDING WITH ANY AFFECTED WORK.
6. COORDINATE THE LOCATION OF ALL ROOF OPENINGS AND THE LOCATION OF ALL ROOF MOUNTED EQUIPMENT WITH THE STRUCTURAL AND ARCHITECTURAL PLANS PRIOR TO ANY FABRICATION AND INSTALLATION.
7. PLATFORMS, CURBS, AND FLASHING FOR MECHANICAL EQUIPMENT SHALL BE AS INDICATED ON THE STRUCTURAL AND ARCHITECTURAL PLANS, UNLESS NOTED OTHERWISE. WHERE THERE IS A CONFLICT WITH THE MECHANICAL PLANS, THE CONTRACTOR SHALL NOTIFY THE ARCHITECT AND ENGINEER PRIOR TO FABRICATION AND INSTALLATION.
8. COORDINATE THE LOCATIONS OF ALL CEILING DIFFUSERS, REGISTERS, AND GRILLES WITH THE ARCHITECTURAL REFLECTED CEILING PLAN, ELECTRICAL LIGHTING LAYOUT, FIRE SPRINKLER SYSTEM, AND ARCHITECTURAL ROOM ELEVATIONS. THE ARCHITECT AND ENGINEER SHALL BE IMMEDIATELY NOTIFIED OF ANY CONFLICTS PRIOR TO FABRICATION AND INSTALLATION.
9. EQUIPMENT, DUCTS, PIPING, AND OTHER DEVICES AND MATERIALS INSTALLED OUTSIDE OF THE BUILDING OR OTHERWISE EXPOSED TO THE WEATHER SHALL BE COMPLETELY WEATHER PROOFED AND PAINTED TO MATCH. COORDINATE WITH ARCHITECT PRIOR TO PAINTING.
10. CONTRACTOR SHALL VERIFY ALL CLEARANCES AND AVAILABLE SPACE FOR DUCTWORK PRIOR TO ORDERING AND/OR FABRICATION.
11. DIMENSIONS SHOWN ON THESE PLANS ARE APPROXIMATE AND MUST BE CONFIRMED ON SITE.
12. PRIOR TO OCCUPANCY THE ENTIRE HVAC SYSTEMS SHALL BE BALANCED BY AN INDEPENDENT AIR BALANCE CONTRACTOR FOR AIR IN ACCORDANCE AND PROCEDURES WITH (AABC) ASSOCIATED AIR BALANCE COUNCIL STANDARDS, (NEBB) NATIONAL ENVIRONMENTAL BALANCING BUREAU , OR (TABB) TESTING ADJUSTING AND BALANCING BUREAU. SYSTEMS SHALL BE BALANCED AS INDICATED ON PLANS INCLUDING OUTSIDE AIR VENTILATION. FINAL BALANCING SHALL BE WITHIN 10% FOR SUPPLY, RETURN AND OUTSIDE AIR QUANTITIES INDICATED. WHERE THERE IS A CONFLICT IN PLANS, THE AIR BALANCE CONTRACTOR SHALL NOTIFY THE ENGINEER PRIOR TO BALANCING OF SYSTEM. IF NOT DONE SO THE AIR BALANCE CONTRACTOR SHALL BEAR ALL COSTS INCURRED FOR WORK THAT MUST BE RE-BALANCED DUE TO CONFLICTS ON CONTRACT DOCUMENTS. CONTRACTOR SHALL PROVIDE THREE COPIES OF THE AIR BALANCE REPORT TO THE ENGINEER FOR APPROVAL. PROVIDE PROCEDURES AND REPORTING PER CAL GREEN CODES SECTION 5.410.4.3, SECTION 5.410.4.3.1 AND SECTION 5.410.4.4.
13. CONTROLS CONTRACTOR AND AIR BALANCE CONTRACTOR SHALL COORDINATE WORK AND PERFORM NECESSARY TASKS AS REQUIRED TO OBTAIN AIR FLOW QUANTITIES FOR SYSTEMS SHOWN HEREIN.
14. PROVIDE TO BUILDING OWNER, PER CAL GREEN CODE SECTION 5.410.4.5, AND CMC 514.0, OPERATING PROCEDURES FOR THE USE, INSPECTION, TESTING, AND MAINTENANCE OF EQUIPMENT MANUAL INCLUDING INSPECTION AND REPORTS AS APPLICABLE.
15. EQUIPMENT, ACCESSORIES AND RELATED PIPING SHALL BE INSTALLED IN STRICT ACCORDANCE WITH THE EQUIPMENT MANUFACTURER'S RECOMMENDATIONS. PROVIDE ALL FITTINGS, TRANSITIONS, DAMPERS, VALVES, AND OTHER DEVICES REQUIRED FOR A COMPLETE WORKABLE INSTALLATION.
16. MAINTENANCE LABEL SHALL BE AFFIXED TO ALL MECHANICAL EQUIPMENT AND A MAINTENANCE MANUAL SHALL BE PROVIDED FOR THE OWNER'S USE. LABEL SHALL IDENTIFY THE UNIT DESIGNATION PER PLANS AND THE SPACE IT SERVES.
    - 16.1. EQUIPMENT: 4-1/2"X1-1/2" ENGRAVED PLASTIC-LAMINATED SIGN WITH 1/2" WHITE LETTERS ON BLACK BACKGROUND.
17. PROVIDE MANUAL VOLUME DAMPERS AND BACKDRAFT DAMPERS FOR OUTSIDE AIR INTAKES ON ALL AIR HANDLING EQUIPMENT AND EXHAUST FANS SERVING CONDITIONED SPACES. EXCEPTION: EQUIPMENT WITH FACTORY AIR ECONOMIZERS.
18. OUTSIDE AIR INTAKES SHALL MEET AS A MINIMUM CODE REQUIRED CLEARANCES FROM EXHAUST, FLUE, FUEL BURNING APPLIANCES AND PLUMBING VENT OUTLETS. FOR GAS/ELECTRIC AIR CONDITIONING UNITS WHERE THE CODE REQUIRED CLEARANCES ARE NOT MET, A FACTORY FLUE GAS DEFLECTOR AND EXTENSION SHALL BE USED TO MINIMIZE THESE CLEARANCES. CONTRACTOR SHALL DETERMINE LOCATIONS WHERE REQUIRED PRIOR TO BID. THIS SHALL BE PROVIDED AT NO ADDITIONAL COST.
19. ALL HVAC EQUIPMENT SERVING NORMALLY OCCUPIED SPACES SHALL HAVE MERV 8 FILTERS UNLESS OTHERWISE NOTED.
20. AIR FILTERS SHALL BE STATE FIRE MARSHALL APPROVED AND LISTED, PREFORMED FILTERS HAVING COMBUSTIBLE FRAMING SHALL BE TESTED AS A COMPLETE ASSEMBLY. INSTALLED FILTERS SHALL BE CLEARLY LABELED BY THE MANUFACTURE INDICATING THE MERV RATING, AND THE FILTER SPECIFICATION SHALL BE INCLUDED IN THE OPERATION AND MAINTENANCE MANUAL. AIR FILTERS SHALL BE ACCESSIBLE FOR CLEANING OR REPLACEMENT.
21. EQUIPMENT WITH MOVING PARTS, FIXED OR FLEXIBLY MOUNTED, SHALL BE PROVIDED WITH FLEXIBLE DUCT AND PIPE CONNECTIONS AND SHALL BE BRACED OR ANCHORED TO COMPLY WITH THE REQUIREMENTS OF TITLE 24.
22. HVAC EQUIPMENT SHALL BE CERTIFIED BY THE CALIFORNIA ENERGY COMMISSION TO COMPLY WITH THE LATEST EFFICIENCY STANDARDS.
23. AC UNITS PROVIDED WITH ECONOMIZER CYCLE DAMPERS SHALL HAVE DAMPERS SET UP TO CLOSE AUTOMATICALLY ON FAN SHUTDOWN. DAMPERS SHALL NOT USE LINKAGE ARRANGEMENT BUT RATHER DIRECT DRIVE ACTUATORS.
24. AIR HANDLING EQUIPMENT SERVING CONDITIONED SPACES SHALL PROVIDE CONTINUOUS OUTSIDE AIR TO SPACES IN OCCUPIED MODE. CONTROLS SHALL BE PROVIDED TO PROVIDE THE MINIMUM RATE OF OUTDOOR AIR REQUIRED BY THE STATE ENERGY REGULATIONS.
25. CONTRACTOR TO SUBMIT ALL EQUIPMENT, DUCTWORK, AIR DISTRIBUTION DEVICES, AND OTHER ACCESSORIES TO THE OWNER'S REPRESENTATIVE FOR APPROVAL PRIOR TO ANY ORDERING OF SUCH ITEMS.
26. VERIFY ALL CONNECTION LOCATIONS WITH UNIT MANUFACTURER AND COORDINATE WITH OTHER TRADES AS NECESSARY.
27. DUCTWORK, PIPING, CONDUIT, ETC. PENETRATING FIRE RATED CONSTRUCTION SHALL HAVE APPROVED FIRE STOPPING.
28. CONTROL SCHEMATICS ARE FOR REFERENCE ONLY. REFER TO ELECTRICAL DRAWINGS AND SPECIFICATIONS FOR ELECTRICAL DEVICES REQUIRED AND SEQUENCE OF OPERATION.
29. LOW VOLTAGE CONDUIT AND WIRING AS APPLICABLE, INCLUDING FINAL CONNECTIONS, SHALL BE FURNISHED AND INSTALLED BY THE MECHANICAL CONTRACTOR AS INDICATED ON THE MECHANICAL DRAWINGS.
30. LOW VOLTAGE WIRING SHALL BE IN CONDUIT WITHIN CONCEALED WALLS AND WHERE EXPOSED.
31. THERMOSTATS SHALL HAVE LOCKABLE COVERS (WHERE INDICATED ON PLANS) AND SHALL BE OF THE ELECTRONIC, PROGRAMMABLE, AUTOMATIC CHANGEOVER TYPE TO SEQUENCE HEATING OR COOLING. SET POINT RANGE SHALL BE 10°F BETWEEN FULL HEATING AND COOLING. THEY SHALL HAVE CAPABILITY OF TERMINATING ALL HEATING AT A TEMPERATURE NO MORE THAN 70°F, AND COOLING AT A TEMPERATURE NOT LESS 78°F. ADJUSTABLE TEMPERATURE DIFFERENTIAL SHALL BE 1½°F. CONTROL LIMITS SHALL BE FROM 55°F TO 85°F. MOUNT TOP OF BOX AT NO MORE THAN 42 INCHES ABOVE FLOOR OR AS REQUIRED BY LOCAL AUTHORITIES FOR ACCESSIBILITY. IN ADDITION, THERMOSTAT( S) SHALL HAVE THE CAPABILITY TO CONNECT AND RESPOND TO A OCCUPANT CONTROLLED DEMAND RESPONSE SIGNAL OR PRICE SIGNAL FOR RESETTING OF ROOM SETPOINTS.
32. SHOULD THE LOCATION OF THE THERMOSTAT NOT MEET THE ADA HEIGHT REQUIREMENTS DUE TO OBSTRUCTIONS, THEN AN ALTERNATE LOCATION SHALL BE PROPOSED OR REQUESTED BY THE CONTRACTOR THAT SHALL BE APPROVED BY THE ENGINEER AND ARCHITECT.
33. DUCTWORK CONSTRUCTION SHALL BE INSTALLED, SEALED AND INSULATED TO MEET THE REQUIREMENTS OF CMC SECTIONS 601.0, 602.0, 603.0, 604.0, 605.0, AND ANSI /SMACNA-006 2006 HVAC DUCT CONSTRUCTION STANDARDS METAL AND FLEXIBLE 3RD EDITION.
34. PROVIDE POLLUTANT CONTROL PER CAL GREEN 2016 CODES SECTION 5.504.1-3 FOR TEMPORARY VENTILATION, COVERING OF DUCT OPENINGS AND PROTECTION OF MECHANICAL EQUIPMENT DURING CONSTRUCTION, AND USE OF LOW VOC SEALANTS
35. ALL SUPPLY, RETURN AND EXHAUST DUCT JOINTS SHALL BE SEALED PER CALIFORNIA MECHANICAL CODE CHAPTER 6 REQUIREMENTS. SEAL CLASS B.
36. DUCTWORK CONSTRUCTION SHALL MEET THE FOLLOWING SYSTEM PRESSURE REQUIREMENTS:
    - 36.1. 2 INCH WATER COLUMN
37. NOW RECTANGULAR DUCTWORK SHALL BE SHEET METAL CONSTRUCTED OR SPIRAL ROUND, ERECTED, AND TESTED IN ACCORDANCE WITH THE MOST RESTRICTIVE OF LOCAL REGULATIONS, PROCEDURES DETAILED IN THE ASHRAE HANDBOOK OF FUNDAMENTALS, CHAPTER 6 OF THE CALIFORNIA MECHANICAL CODES, OR THE APPLICABLE STANDARDS ADOPTED BY (SMACNA) SHEET METAL AND AIR CONDITIONING CONTRACTORS NATIONAL ASSOCIATION: SMACNA HVAC DUCT CONSTRUCTION STANDARDS -METAL OR FLEXIBLE, OR UL181.
38. ALL FLEXIBLE DUCT SHALL NOT EXCEED FIVE FEET IN LENGTH TO RESPECTIVE DIFFUSERS, GRILLES, OR OTHER AIR DEVICES.
39. AT THE TIME OF ROUGH INSPECTION AND DURING STORAGE ON THE CONSTRUCTION SITE AND UNTIL FINAL STARTUP OF THE HEATING, COOLING AND VENTILATING EQUIPMENT, ALL DUCT AND OTHER RELATED AIR DISTRIBUTION COMPONENTS, OPENINGS SHALL BE COVERED WITH TAPE, PLASTIC, SHEET METAL OR OTHER METHODS TO REDUCE THE AMOUNT OF DEBRIS WHICH MAY COLLECT IN THE SYSTEM.
40. LIMIT USE OF PERMANENT HVAC SYSTEMS DURING CONSTRUCTION TO CONDITIONING NECESSARY FOR MATERIAL AND EQUIPMENT INSTALLATION. IF PERMANENT HVAC IS USED DURING CONSTRUCTION, INSTALL MERV-8 FILTERS ON RETURNS, AND REPLACE ALL FILTERS IMMEDIATELY PRIOR TO OCCUPANCY, OR ,IF THE BUILDING IS OCCUPIED DURING ALTERATION, AT THE CONCLUSION OF CONSTRUCTION.
41. PROVIDE SEISMIC RESTRAINTS TO ALL DUCTWORK, PIPE, AND EQUIPMENT SUPPORTS IN ACCORDANCE WITH THE LATEST SMACNA GUIDELINES FOR SEISMIC RESTRAINT OF MECHANICAL SYSTEMS. SUSPENDED EQUIPMENT SHALL BE PROVIDED WITH SEISMIC ANCHORAGE AND ISOLATION SUPPORTS.
42. WHERE ANCHORAGE DETAILS ARE NOT SHOWN ON THE DRAWINGS THE FIELD INSTALLATION SHALL BE SUBJECT TO THE APPROVAL OF THE STRUCTURAL ENGINEER OR THE FIELD REPRESENTATIVE OF THE DIVISION OF THE STATE ARCHITECT.
43. RECTANGULAR DUCT TURNS IN SUPPLY, RETURN, AND EXHAUST DUCTS SHALL HAVE TURNING VANES UNLESS OTHERWISE NOTED, OR SHALL HAVE A INNER RADIUS TURN OF NO LESS THAN THE WIDTH OF THE DUCT.
44. DUCTWORK HANDLING CONDITIONED AIR SHALL BE INSULATED OR LINED. INTERIOR DUCTWORK SHALL BE INSULATED WITH A NON-FIBEROUS MATERIAL, R=4.2. ALL SUPPLY AND RETURN DUCTWORK EXPOSED TO WEATHER SHALL BE INTERNALLY LINED WITH 2" THICK DUCT LINER UNLESS OTHERWISE INDICATED OR SPECIFIED. ALL DUCT SIZES INDICATED ON PLANS ARE NET INSIDE DIMENSIONS. ALL INSULATION SHALL HAVE A FLAME SPREAD OF NOT MORE THAN 25 AND A SMOKE DENSITY NOT EXCEEDING 50.
45. CONTRACTORS OPTIONS: WHERE ROUND LINED DUCTWORK IS INDICATED, CONTRACTOR MAY USE RECTANGULAR DUCTWORK OF EQUIVALENT NET FREE AREA OR PRESSURE DROP (WHICHEVER IS MOST RESTRICTIVE).
46. MANUAL VOLUME DAMPERS SHALL BE PROVIDED IN ALL DUCT BRANCHES TO INDIVIDUAL DIFFUSERS, GRILLES, AND REGISTERS, AS WELL AS OUTSIDE AIR INTAKE DUCTS. DAMPERS SHALL BE LOCATED AT THE BRANCH DUCT LOCATIONS. THE MECHANICAL CONTRACTOR SHALL COORDINATE LOCATIONS OF DAMPERS WITH THE AIR BALANCING CONTRACTOR PRIOR TO BID, SO AS TO ENSURE ACCESSIBILITY AFTER INSTALLATION. IN LOCATIONS WHERE THESE DAMPERS ARE INACCESSIBLE, CABLE OPERATED ADJUSTMENT CONTROLS SHALL BE PROVIDED AT NO ADDITIONAL COST. OPPOSED BLADE DAMPERS SHALL NOT BE PERMITTED UNLESS OTHERWISE NOTED.
47. PROVIDE AUTOMATIC FIRE DAMPERS AT ALL PENETRATIONS OF RATED CEILINGS AND WALLS THROUGHOUT. CONTRACTOR SHALL COORDINATE FIRE-RATED AREAS WITH THE ARCHITECTURAL DRAWINGS AND OTHER TRADES PRIOR TO INSTALLATION AND SHALL NOTIFY PERTINENT PARTIES PRIOR TO ANY WORK PERFORMED IN THESE AREAS. IN ADDITION, CONTRACTOR SHALL BE RESPONSIBLE TO PROVIDE PROPER ACCESS FOR DAMPERS INSTALLED. THE DAMPER FIRE RATING SHALL BE COMPATIBLE WITH THE CEILING/WALL ASSEMBLY RATING.
48. LOCATION OF FIRE-RATED CEILINGS AND WALLS ARE AS INDICATED ON THE ARCHITECTURAL DRAWINGS.
49. DUCTWORK PASSING THROUGH FIRE RATED CORRIDORS AND LOBBIES, BUT HAS NO AIR INLET/OUTLET, SHALL BE MINIMUM 26 GAUGE SHEET METAL CONSTRUCTION.
50. DUCT SMOKE DETECTORS FOR AIR MOVING EQUIPMENT HAVING MORE THAN 2000 CFM SHALL HAVE DUCT SMOKE DETECTOR, BUT ARE NOT REQUIRED PER 2016 CMC 608.0 EXCEPTION WHERE ALL AREAS SERVED BY SAID EQUIPMENT HAS DIRECT EGRESS WITHIN 100 FEET.
51. FIRE AND/OR SMOKE DAMPER(S) SHALL BE PROVIDED AS REQUIRED BY THE LATEST CALIFORNIA BUILDING CODE INCLUDING ALL OCCUPANCY SEPARATION WALLS AND AS INDICATED HEREIN.
52. CONTRACTOR SHALL FURNISH FLUSH MOUNTED FIRE AND/OR SMOKE DAMPER(S), SO THAT DAMPER DOES NOT EXTEND PAST WALL FOR AREAS WITHOUT CEILINGS FOR QUALITY WORKMANSHIP.
53. SMOKE DAMPERS SHALL BE CONTROLLED BY (AREA?) SMOKE DETECTORS FURNISHED UNDER DIVISION 26. DUCT MOUNTED SMOKE DETECTORS SHALL BE FURNISHED UNDER DIVISION 16 AND INSTALLED BY MECHANICAL CONTRACTOR. ALL POWER AND SIGNAL WIRING FOR ALARM SYSTEM SHALL BE FURNISHED AND INSTALLED UNDER DIVISION 26. LOW VOLTAGE WIRING AND INTERLOCK FOR SHUT DOWN CONTROLS SHALL BE BY CONTROLS CONTRACTOR.
54. HVAC CONTRACTOR TO REMOVE ALL LEFT OVER DUCTWORK SCRAPS, ETC. (IF ANY) AND LEAVE PREMISES CLEAN AND FREE OF ANY TRASH OR DEBRIS DUE TO THEIR WORK.

## MECHANICAL LEGEND

| SYMBOL | ABBREVIATION | DESCRIPTION |
|---|---|---|
| | AFF | ABOVE FINISHED FLOOR |
| | AL | ACOUSTICALLY LINED |
| | BOD | BOTTOM OF DUCT |
| | CFM | CUBIC FEET PER MINUTE |
| | BDD | DAMPER: BACKDRAFT |
| | FSD | DAMPER: FIRE/SMOKE |
| | FD | DAMPER: FIRE |
| | MVD | DAMPER: MANUAL VOLUME |
| | Ø | DIAMETER |
| | DN | DOWN |
| | DS | DISCONNECT SWITCH |
| | | DUCT SMOKE DETECTOR |
| | EER | ENERGY EFFICIENCY RATIO |
| | EA | EXHAUST AIR |
| | F | FAN |
| | FLA | FULL LOAD AMPS |
| | | FLEXIBLE DUCT |
| | HP | HORSEPOWER |
| | MCA | MINIMUM CIRCUIT AMPACITY |
| | MOCP | MAXIMUM OVERCURRENT PROTECTION |
| | MS | MOTOR STARTER |
| | RL | REFRIGERANT LIQUID |
| | RS | REFRIGERANT SUCTION |
| | OA | OUTSIDE AIR |
| | RA | RETURN AIR |
| | SA | SUPPLY AIR |
| | TA | TRANSFER AIR |
| | TP | RATED THRU PENETRATION |
| | SEER | SEASONAL EER |
| | SAD | SEE ARCHITECTURAL DRAWING |
| | SSD | SEE STRUCTURAL DRAWING |
| | $CO_2$ | SENSOR: CARBON DIOXIDE |
| | T | THERMOSTAT |
| | TYP | TYPICAL |
| | UON | UNLESS OTHERWISE NOTED |
| | WT | WEIGHT |
| | 24x12 | RECTANGULAR DUCT - INCHES |
| | 12" | ROUND DUCT - INCHES |

JOB COPY
These plans mu... job at all times.
CITY OF MORGAN HILL
BUILDING DIVISION

WESTON MILES ARCHITECTS
17500 Depot Street, Suite #200
Morgan Hill, CA 95037
1 • 408 • 779 • 6686
• Architecture • Landscape •

LICENSED ARCHITECT · WESLEY L. MILES · 9-30-19 · STATE OF CALIFORNIA
NOT VALID WITHOUT SIGNATURE

H&M MECHANICAL GROUP
8517 Earhart Rd, Suite 230
Oakland, CA 94621
510-569-2000

CONSULTANT JOB NO: 17120

REGISTERED PROFESSIONAL ENGINEER · GARY L. HENNINGS · No. M20245 · 10/30/2018 · MECHANICAL · STATE OF CALIFORNIA

REVISIONS
1

# HVAC: NOTES & LEGEND

## CENTENNIAL RECREATION CENTER EXPANSION PROJECT

CITY OF MORGAN HILL
171 W EDMUNDSON AVE, MORGAN HILL, CA 95037

These drawings are instruments of service and are the property of WESTON MILES ARCHITECTS, INC. All designs and other information on the drawings are for use on the specified project and shall not be used otherwise without the expressed written permission of WESTON MILES ARCHITECTS, INC.

Written dimensions on these drawings shall have precedence over scaled dimensions. Contractors shall verify and be responsible for all dimensions and conditions on the job and this office shall be notified of any variations from the dimensions and conditions shown by these drawings. Shop details shall be submitted to this office for approval before proceeding with fabrication.

© Copyrighted 2018

DATE: 02/01/2019
JOB NO: 18001

M0.1

## ROOFTOP GAS/ELECTRIC

| EQUIP ID | TRANE MODEL NO | REFRIG | TCC (KBTUH @ ARI) | EER/ SEER | HEATING INPUT (KBTUH) | AFUE (%) | AIR FLOW (CFM) | TSP (IN WC) | MCA/ MOCP (AMPS) | ELECT V/φ/HZ | OPER WEIGHT (LBS) | ACCESSORIES | REF DETAIL |
|---|---|---|---|---|---|---|---|---|---|---|---|---|---|
| AC-4 | YHD150G4RVB | 410A | 147.7 | 12.1/13.5 | 350 | 80 | 4200 | 1.25 | 30/40 | 460/3/60 | 3350 | 1, 2, 5, 6 | 10,11 / M0.3 |

ACCESSORIES:
1 - CANFAB DRY BULB LOW LEAK ECONOMIZER WITH POWER EXHAUST (ROOM PRESSURIZATION CONTROL).
2 - FAULT DETECTION AND DIAGNOSTIC SYSTEM.
3 - HAIL GUARD.
4 - 14" HIGH ROOF CURB
5 - SINGLE ZONE VARIABLE AIR VOLUME CONFIGURATION.
6 - 16" HIGH ROOF CURB WITH 2" DEFLECTION SEISMIC VIBRATION ISOLATOR RAIL BY MW SAUSSÉ & CO (PRE-APROVAL NO OPM#-0203-13), INTEGRAL SOUND ATTENUATION PACKAGE.
7 - OA HOOD WITH MOTORIZED DAMPER

NOTE: ALL UNITS WITH 2000 CFM OR MORE HAVING DIRECT EGRESS WITHIN 100' DOES NOT REQUIRE DUCT SMOKE DETECTOR.

## AIR DISTRIBUTION

| STYLE | TITUS MODEL NO | APPLICATION | DESCRIPTION |
|---|---|---|---|
| A | OMNI | FLUSH MOUNT SUPPLY DIFFUSER | 24x24 FLUSH FACE MOUNT SUPPLY WITH NECK SIZE TO MATCH DUCT SIZE (UON), STEEL CONSTRUCTION, WHITE FINISH |
| B | PAR | FLUSH MOUNT RETURN DIFFUSER | 24x24 PERFORATED FLUSH FACE MOUNT RETURN WITH NECK SIZE TO MATCH DUCT SIZE (UON), STEEL CONSTRUCTION, WHITE FINISH |
| C | 300RS | SIDEWALL SUPPLY GRILLE | STEEL SUPPLY GRILLE, 3/8" BLADE SPACE, DOUBLE DEFLECTION, BLADES PARALLEL TO SHORT DIMENSION, WHITE FINISH |
| D | 350RL | SIDEWALL RETURN GRILLE | STEEL RETURN GRILLE, 3/8" BLADE SPACE, 35 DEGREE DEFLECTION, BLADES PARALLEL TO LONG DIMENSION, WHITE FINISH |

CEILING DIFFUSER CALL OUT DESCRIPTION: 200A — STYLE; CFM

SIDEWALL GRILLE CALL OUT DESCRIPTION: 30X6 — SIZE; 200A — STYLE; CFM

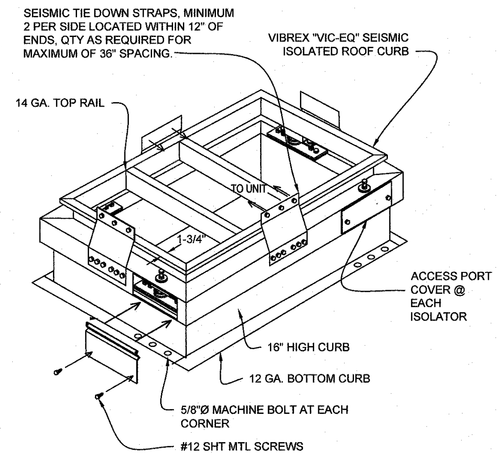


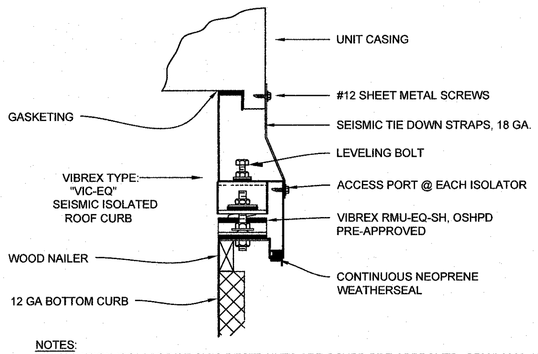


NOTES:
1. VIBRATION ISOLATOR/SEISMIC RESTRAINTS ARE OSHPD PRE-APPROVED, OPM#-0203-13.
2. SEISMIC CALCULATIONS REQUIRED FOR ENTIRE ASSEMBLY INCLUDING ANCHOR BOLTS.
3. REFER TO SPECIFICATIONS FOR ADDITIONAL REQUIREMENTS
4. LINE THE ENTIRE INTERIOR OF CURB AREA WITH 2" DUCT LINER, INSTALLATION SHALL BE CONFIRMED BY IOR.
5. REFER TO SHEET D7 FOR INSTALLATION OF CURB AND FLASHING

1 / M0.2 AC ROOF CURB AND ISOLATOR
Scale: NONE

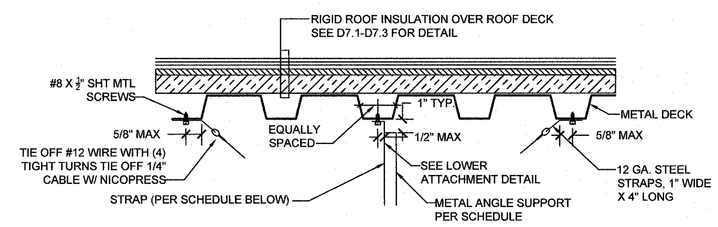


A. UPPER ATTACHMENT TO METAL DECK DETAIL

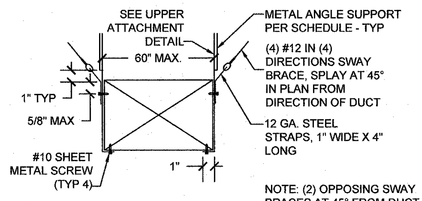


D. RECTANGULAR DUCT

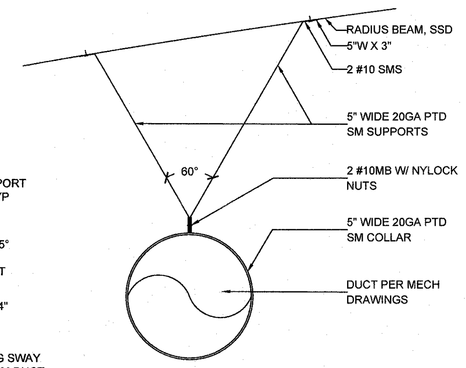


E. ROUND DUCT

NOTES:

INSTALLATION SHALL COMPLY W/ LATEST SMACNA STANDARDS. SUBMIT SHOP DRAWINGS FOR MOUNTING TO ENGINEER. ALL ALTERNATE INSTALLATIONS SHALL BE APPROVED BY ENGINEER AND DSA.

ONLY DUCTS WITH CROSS SECTIONAL AREAS OF 6 SQFT AND LARGER SHALL BE SEISMICALLY SWAY BRACED.

TRANSVERSE AND LONGITUDINAL BRACING SHALL BE SPACED AT MAXIMUM OF 50' INTERVALS

EXCEPTION: NO BRACING IS REQUIRED IF THE DUCT IS SUSPENDED BY HANGER 12" OR LESS IN LENGTH, AS MEASURED FROM THE TOP OF THE DUCT TO THE BOTTOM OF THE SUPPORT ATTACHMENT

ROUND DUCT SUPPORT SPACING @ 12'-0" O.C. MAXIMUM 6'-0" FROM ENDS.
RECTANGULAR DUCT SUPPORT SPACING @ 10'-0" O.C. MAXIMUM 6'-0" FROM ENDS

METAL ANGLE SUPPORT SIZES

ROUND DUCT
1"X1"X20 GA.: DUCTS 24"Ø & DOWN
1"X1"X18 GA.: DUCTS 24" TO 36"

RECTANGULAR DUCT
1"X1"X22 GA.: HALF OF DUCT PERIMETER IS 30" OR LOWER
1"X1"X18 GA.: HALF OF DUCT PERIMETER IS 72" OR LOWER
1"X1"X16 GA.: HALF OF DUCT PERIMETER IS 96" OR LOWER
1-1/2"X1-1/2"X16 GA.: HALF OF DUCT PERIMETER IS 120" OR LOWER

2 / M0.2 DUCT SUPPORT DETAIL
Scale: NONE

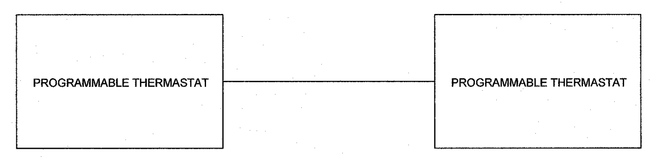


3 / M0.2 CONTROLS DIAGRAM
Scale: NONE

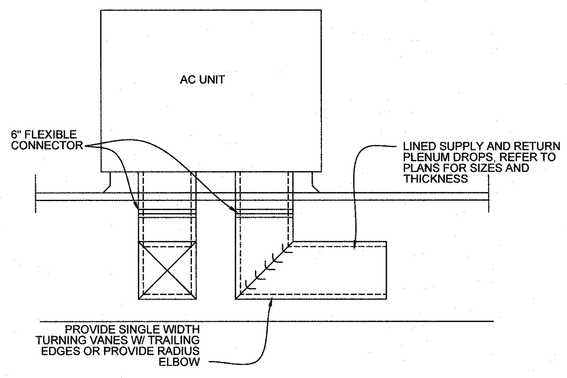


4 / M0.2 DUCT CONNECTION DETAIL
Scale: NONE

JOB COPY
These plans must be kept at the job at all times.
CITY OF MORGAN HILL
BUILDING DIVISION

WESTON MILES
ARCHITECTS
17500 Depot Street, Suite #200
Morgan Hill, CA 95037
1 • 408 • 779 • 6686
• Architecture • Landscape •

REGISTERED ARCHITECT JERRY L. HENN No. 18-7-19-20 STATE OF CALIFORNIA
NOT VALID WITHOUT SIGNATURE

HM MECHANICAL GROUP
8517 Earhart Rd, Suite 230
Oakland, CA 94621
510-569-2000

CONSULTANT JOB NO: 17120

REGISTERED PROFESSIONAL ENGINEER JERRY L. HENN No. M20245 10/30/2018 MECHANICAL STATE OF CALIFORNIA

REVISIONS
1

# HVAC: SCHEDULES & DETAILS

CENTENNIAL RECREATION CENTER EXPANSION PROJECT

CITY OF MORGAN HILL
171 W. EDMUNDSON AVE., MORGAN HILL, CA 95037

These drawings are instruments of service and are the property of WESTON MILES ARCHITECTS, INC. All designs and other information on the drawings are for use on the specified project only and shall not be reused without the expressed written permission of WESTON MILES ARCHITECTS, INC.

Written dimensions on these drawings shall have precedence over scaled dimensions. Contractors shall verify and be responsible for all dimensions and conditions on the job and this office shall be notified of any variations from the dimensions and conditions shown by these drawings. Shop details shall be submitted to this office for approval before proceeding with fabrication.

© Copyright 2018

DATE: 02/01/2019

JOB NO: 18001

M0.2

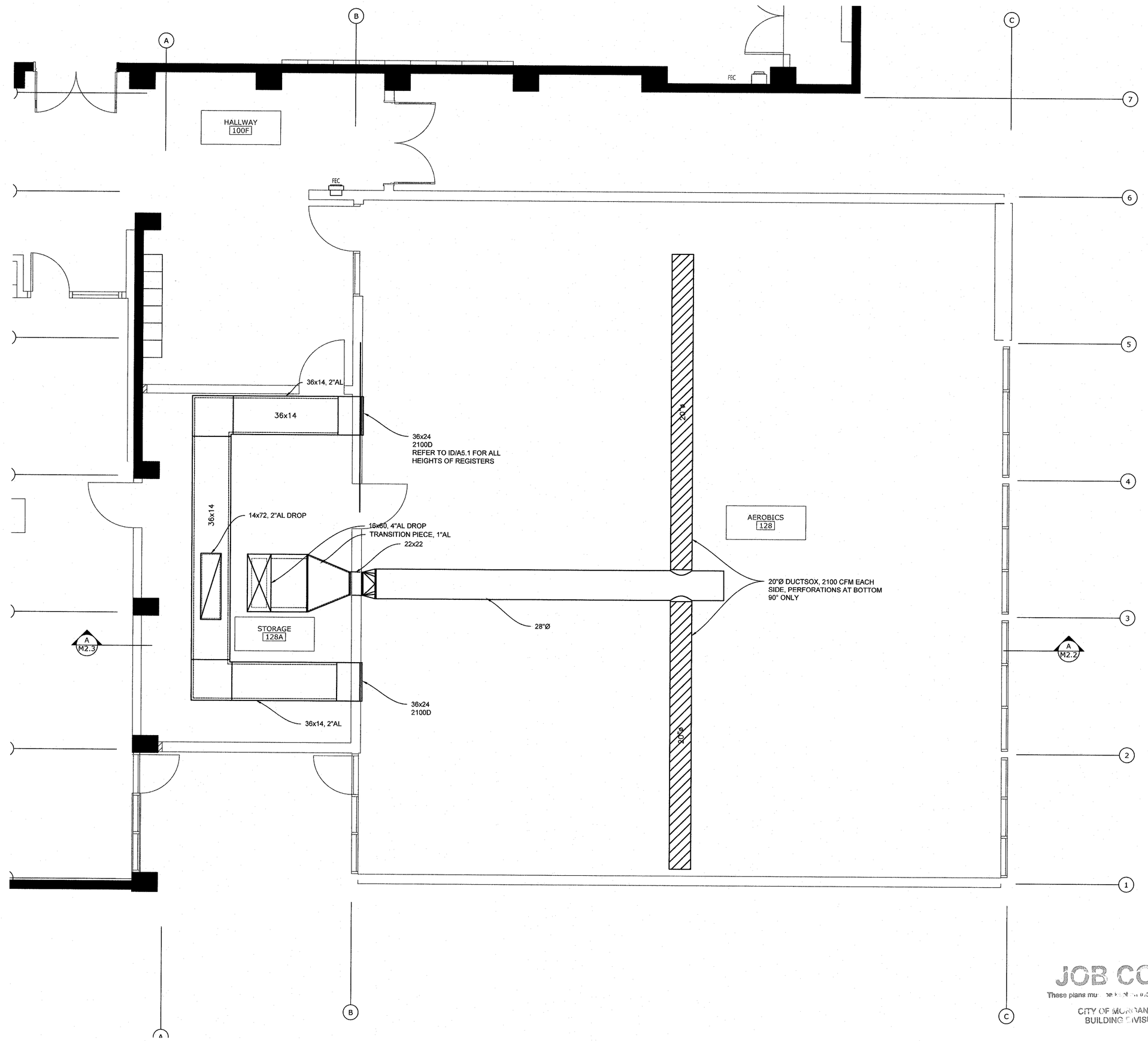


JOB COPY
These plans must be kept on the job at all times.
CITY OF MORGAN HILL
BUILDING DIVISION

HVAC: FLOOR PLAN (1)
SCALE: 1/4"=1'-0"

TRUE NORTH

WESTON MILES
ARCHITECTS
17500 Depot Street, Suite #200
Morgan Hill, CA 95037
1 • 408 • 779 • 6686
• Architecture • Landscape •

REGISTERED ARCHITECT
DALE J. WESTON
No. 9-29-19
STATE OF CALIFORNIA

NOT VALID WITHOUT SIGNATURE

HM
MECHANICAL GROUP
8517 Earhart Rd. Suite 230
Oakland, CA 94621
510-569-2000

CONSULTANT JOB NO: 17120

REGISTERED PROFESSIONAL ENGINEER
MICHAEL L. HERMANS
No. M22040
10/30/2018
MECHANICAL
STATE OF CALIFORNIA

REVISIONS
1

# HVAC: FLOOR PLAN

## CENTENNIAL RECREATION CENTER EXPANSION PROJECT

CITY OF MORGAN HILL
171 W EDMUNDSON AVE, MORGAN HILL, CA 95037

These drawings are instruments of service and are the property of WESTON MILES ARCHITECTS, INC. All designs and other information on the drawings are for use on the specified project and shall not be used otherwise without the written consent and permission of WESTON MILES ARCHITECTS, INC.

Written dimensions on these drawings shall have precedence over scale dimensions. The contractor shall be fully responsible for all dimensions and conditions on the job and this office shall be notified of any variations from the dimensions and conditions shown by these drawings. Shop details shall be submitted to this office for approval before proceeding with fabrication.

© Copyrighted 2018

DATE: 02/01/2019

JOB NO: 18001

M2.1

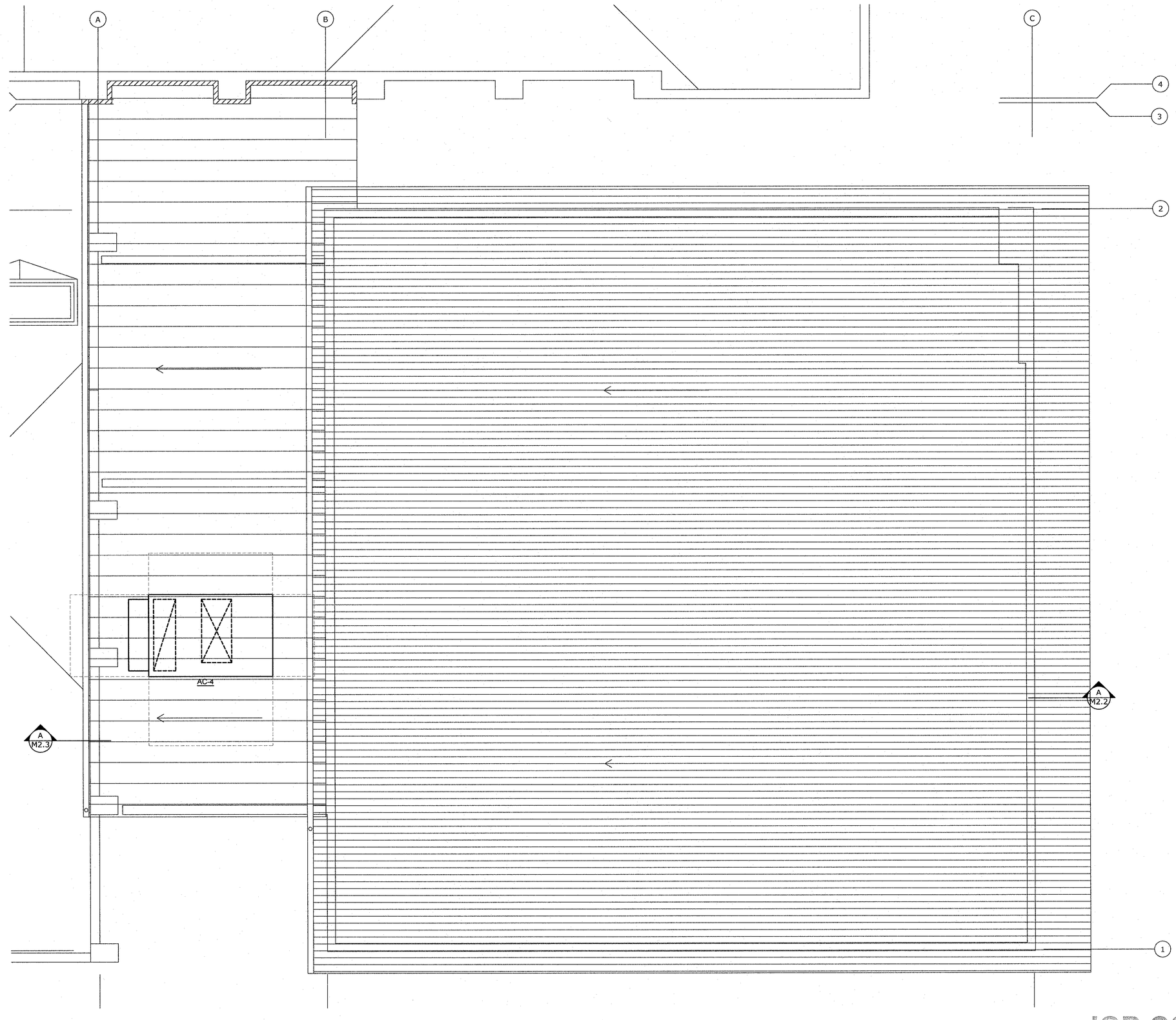


JOB COPY
These plans must be kept at the job at all times.
CITY OF MORGAN HILL
BUILDING DIVISION

HVAC: ROOF PLAN 1
SCALE: 1/4"=1'-0"

TRUE NORTH


WESTON MILES
ARCHITECTS
17500 Depot Street, Suite #200
Morgan Hill, CA 95037
1 • 408 • 779 • 6686
• Architecture • Landscape •


REGISTERED ARCHITECT
JOHN L. WESTON
No. 4-7-19
STATE OF CALIFORNIA

NOT VALID WITHOUT SIGNATURE


HM MECHANICAL GROUP
8517 Earhart Rd, Suite 230
Oakland, CA 94621
510-569-2000


CONSULTANT JOB NO: 17120

REGISTERED PROFESSIONAL ENGINEER
JERRY L. HENNING
No. M00245
10/30/2018
MECHANICAL
STATE OF CALIFORNIA

REVISIONS
1

# HVAC: ROOF PLAN

## CENTENNIAL RECREATION CENTER EXPANSION PROJECT

CITY OF MORGAN HILL
171 W EDMUNDSON AVE, MORGAN HILL, CA 95037


These drawings are instruments of service and are the property of WESTON MILES ARCHITECTS, INC. All designs and other information on the drawings are for use on the specified project and shall not be used otherwise without the written permission of WESTON MILES ARCHITECTS, INC.


Written dimensions on these drawings shall have precedence over scaled dimensions. Contractors shall verify and be responsible for all dimensions and conditions on the job and this office shall be notified of any variations from the dimensions and conditions shown by these drawings. Shop details shall be submitted to this office for approval before proceeding with fabrication.


© Copyrighted 2018


DATE: 02/01/2019

JOB NO: 18001

M2.2

## SHEET NOTES

1. SEE ARCHITECTURAL DRAWINGS FOR DUCT DIMENSIONS AND ELEVATIONS.

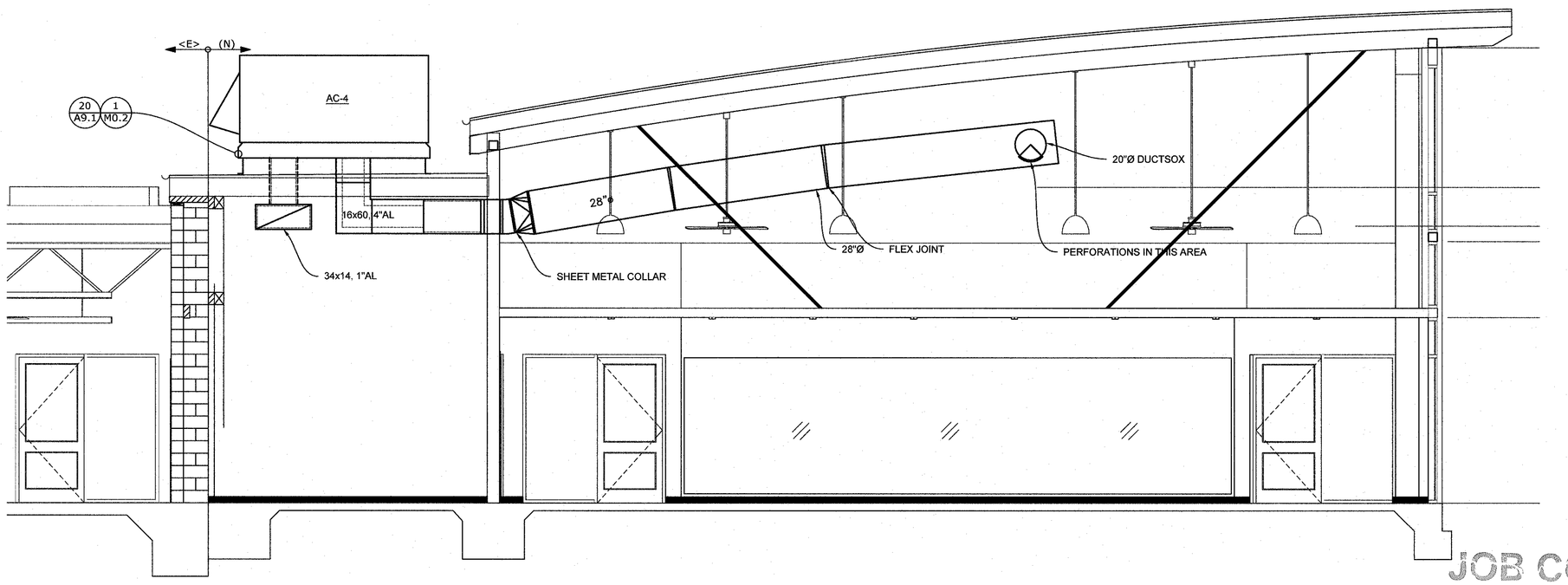


JOB COPY
These plans may be used for job at all times
CITY OF MORGAN HILL
BUILDING DIVISION

HVAC: SECTION (A)
SCALE: 1/4"=1'-0"

WESTON MILES
ARCHITECTS
17500 Depot Street, Suite #200
Morgan Hill, CA 95037
1 • 408 • 779 • 6686
• Architecture • Landscape •

REGISTERED ARCHITECT
MARGARET L. MILES
No. C-17848
Exp. 1-31-19
STATE OF CALIFORNIA

NOT VALID WITHOUT SIGNATURE

HM MECHANICAL GROUP
8517 Earhart Rd, Suite 230
Oakland, CA 94621
510-569-2000

CONSULTANT JOB NO: 17120

REGISTERED PROFESSIONAL ENGINEER
No. M25245
10/30/2018
MECHANICAL
STATE OF CALIFORNIA

REVISIONS
1

# HVAC: SECTION

CENTENNIAL RECREATION CENTER EXPANSION PROJECT

CITY OF MORGAN HILL
171 W EDMUNDSON AVE, MORGAN HILL, CA 95037

These drawings are instruments of service and are the property of WESTON MILES ARCHITECTS, INC. All designs and other information on the drawings are for use on the specified project only and shall not be reused without the expressed written permission of WESTON MILES ARCHITECTS, INC.

Written dimensions on these drawings shall have precedence over scaled dimensions. Contractors shall verify and be responsible for all dimensions and conditions on the job and this office shall be notified of any variations from the dimensions and conditions shown on these drawings. Shop details shall be submitted to this office for approval before proceeding with fabrication.

© Copyrighted 2018

DATE: 02/01/2019

JOB NO: 18001

M2.3

**A. PROJECT GENERAL INFORMATION**

| | | | | | |
|---|---|---|---|---|---|
| 1. | Project Location (city) | Morgan Hill | 8. | Standards Version | Compliance2016 |
| 2. | CA Zip Code | 95037 | 9. | Compliance Software (version) | EnergyPro 7.2 |
| 3. | Climate Zone | 4 | 10. | Weather File | SAN-JOSE-REID_724946_CZ2010.epw |
| 4. | Total Conditioned Floor Area in Scope | 4,024 ft² | 11. | Building Orientation (deg) | (E) 90 deg |
| 5. | Total Unconditioned Floor Area | 0 ft² | 12. | Permitted Scope of Work | NewEnvelopeAndMechanical |
| 6. | Total # of Stories (Habitable Above Grade) | 1 | 13 | Building Type(s) | Nonresidential |
| 7. | Total # of dwelling units | 0 | 14 | Gas Type | NaturalGas |

**B. COMPLIANCE RESULTS FOR PERFORMANCE COMPONENTS (Annual TDV Energy Use, kBtu/ft²-yr)** § 140.1

**BUILDING COMPLIES**

| 1. Energy Component | 2. Standard Design (TDV) | 3. Proposed Design (TDV) | 4. Compliance Margin (TDV) | 5. Percent Better than Standard |
|---|---|---|---|---|
| Space Heating | 2.80 | 4.88 | -2.08 | -74.3% |
| Space Cooling | 83.06 | 68.61 | 14.45 | 17.4% |
| Indoor Fans | 124.90 | 59.24 | 65.66 | 52.6% |
| Heat Rejection | - | - | - | - |
| Pumps & Misc. | - | - | - | - |
| Domestic Hot Water | 4.16 | 4.16 | - | 0.0% |
| Indoor Lighting | 77.50 | 77.50 | - | 0.0% |
| **COMPLIANCE TOTAL** | **292.42** | **214.39** | **78.03** | **26.7%** |
| Receptacle | 71.46 | 71.46 | 0.0 | 0.0% |
| Process | - | - | - | - |
| Other Ltg | - | - | - | - |
| Process Motors | - | - | - | - |
| **TOTAL** | **363.88** | **285.85** | **78.0** | **21.4%** |





**C. PRIORITY PLAN CHECK/ INSPECTION ITEMS** (In order of highest to lowest TDV energy savings)

| | |
|---|---|
| 1st | Indoor Fans: Check envelope and mechanical |
| 2nd | Space Cooling: Check envelope and mechanical |
| 3rd | Heat Rejection: Check envelope and mechanical |
| 4th | Pumps & Misc.: Check mechanical |
| 5th | Domestic Hot Water: Check mechanical |
| 6th | Indoor Lighting: Check lighting |
| 7th | Space Heating: Check envelope and mechanical |

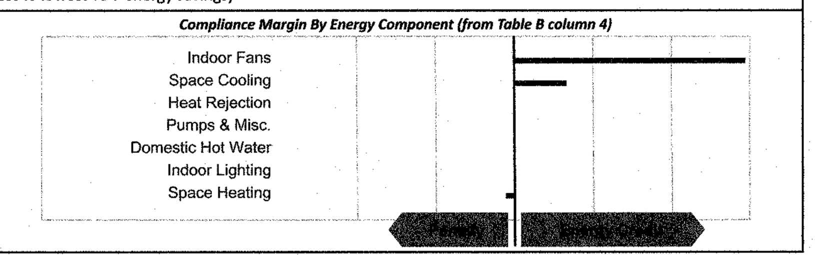


**D. EXCEPTIONAL CONDITIONS**

This project includes partial performance compliance scope options. The building must show compliance with all other applicable compliance scope options (performance or prescriptively) before occupying.

The aged solar reflectance and aged thermal emittance must be listed in the Cool Roof Rating Council database of certified products. For projects where initial reflectance is used, the initial reflectance must be listed, and the aged reflectance is calculated by the software program and used in the compliance model.

The building does not include service water heating. Verify that service water heating is not required and is not included in the design.

This project uses the Simplified Geometry Performance Modeling Approach which is not capable of modeling daylighting controls and assumes the prescriptive Secondary Daylit Control requirements are met. PRESCRIPTIVE COMPLIANCE documentation (form NRCC-LTI-02-E) for the requirements of section 140.6(d) Automatic Daylighting Controls in Secondary Daylit Zones is required.

**E. HERS VERIFICATION**

This Section Does Not Apply

**F. ADDITIONAL REMARKS**

None Provided





**G. COMPLIANCE PATH & CERTIFICATE OF COMPLIANCE SUMMARY**

*Identify which building components use the performance or prescriptive path for compliance. "NA" = not in project*
*For components that utilize the performance path, indicate the sheet number that includes mandatory notes on plans.*

| Building Component | Compliance Path | Compliance Forms *(required for submittal)* | Location of Mandatory Notes on Plans |
|---|---|---|---|
| Envelope | ☒ Performance | NRCC-PRF-ENV-DETAILS (section of the NRCC-PRF-01-E) | |
| | ☐ Prescriptive | NRCC-ENV-01 / 02 / 03 / 04 / 05 / 06-E | |
| | ☐ NA | | |
| Mechanical | ☒ Performance | NRCC-PRF-MCH-DETAILS (section of the NRCC-PRF-01-E) | |
| | ☐ Prescriptive | NRCC-MCH-01 / 02 / 03 / 04 / 05 / 06 / 07-E | |
| | ☐ NA | | |
| Domestic Hot Water | ☐ Performance | NRCC-PRF-PLB-DETAILS (section of the NRCC-PRF-01-E) | |
| | ☐ Prescriptive | NRCC-PLB-01-E | |
| | ☒ NA | | |
| Lighting (Indoor Conditioned) | ☐ Performance | NRCC-PRF-LTI-DETAILS (section of the NRCC-PRF-01-E) | |
| | ☐ Prescriptive | NRCC-LTI-01 / 02 / 03 / 04 / 05-E | |
| | ☒ NA | | |
| Covered Process: Commercial Kitchens | ☐ Performance | S2 (section of the NRCC-PRF-01-E) | |
| | ☐ Prescriptive | NRCC-PRC-01/ 03-E | |
| | ☒ NA | | |
| Covered Process: Computer Rooms | ☐ Performance | S3 (section of the NRCC-PRF-01-E) | |
| | ☐ Prescriptive | NRCC-PRC-01/ 04-E | |
| | ☒ NA | | |
| Covered Process: Laboratory Exhaust | ☐ Performance | S4 (section of the NRCC-PRF-01-E) | |
| | ☐ Prescriptive | NRCC-PRC-01/ 09-E | |
| | ☒ NA | | |





**G. COMPLIANCE PATH & CERTIFICATE OF COMPLIANCE SUMMARY**

*The following building components are only eligible for prescriptive compliance. Indicate which are relevant to the project.* / *The following building components may have mandatory requirements per Part 6. Indicate which are relevant to the project.*

| Yes | NA | Prescriptive Requirement | Compliance Forms | Yes | NA | Mandatory Requirement | Compliance Forms |
|---|---|---|---|---|---|---|---|
| ☐ | ☒ | Lighting (Indoor Unconditioned) §140.6 | NRCC-LTI-01 / 02 / 03 / 04 / 05-E | ☐ ☐ | ☒ ☒ | Commissioning: §120.8<br>Simple Systems<br>Complex Systems | NRCC-CXR-01 / 02 / 03 / 05-E<br>NRCC-CXR-01 / 02 / 04 / 05-E |
| ☐ | ☒ | Lighting (Outdoor) §140.7 | NRCC-LTO-01 / 02 / 03-E | ☐ | ☒ | Electrical: §130.5 | NRCC-ELC-01-E |
| ☐ | ☒ | Lighting (Sign) §140.8 | NRCC-LTS-01-E | ☐ | ☒ | Solar Ready: §110.10 | NRCC-SRA-01 / 02-E |
| ☐ | ☒ | Solar Thermal Water Heating: §140.5 | NRCC-STH-01-E | ☐ ☐ ☐ ☐ ☐ | ☒ ☒ ☒ ☒ ☒ | Covered Process: §120.6<br>Parking Garage<br>Commercial Refrigeration<br>Warehouse Refrigeration<br>Compressed Air<br>Process Boilers | NRCC-PRC-01-E<br>NRCC-PRC-02-E<br>NRCC-PRC-05-E<br>NRCC-PRC-06/07/08-E<br>NRCC-PRC-10-E<br>NRCC-PRC-11-E |





**H. CERTIFICATE OF INSTALLATION, CERTIFICATE OF ACCEPTANCE & CERTIFICATE OF VERIFICATION SUMMARY (NRCI/NRCA/NRCV) –**
Documentation Author to indicate which Certificates must be submitted for the features to be recognized for compliance
(Retain copies and verify forms are completed and signed to post in field for Field Inspector to verify).
See Tables G. and H. in MCH and LTI Details Sections for Acceptance Tests and forms by equipment.

| Building Component | Compliance Forms *(required for submittal)* | Confirmed Pass | Confirmed Fail |
|---|---|---|---|
| Envelope | ☒ NRCI-ENV-01-E - For all buildings | ☐ | ☐ |
| | ☒ NRCA-ENV-02-F- NFRC label verification for fenestration | ☐ | ☐ |
| Mechanical | ☒ NRCI-MCH-01-E - For all buildings with Mechanical Systems | ☐ | ☐ |
| | ☒ NRCA-MCH-02-A- Outdoor Air | ☐ | ☐ |
| | ☒ NRCA-MCH-03-A – Constant Volume Single Zone HVAC | ☐ | ☐ |
| | ☐ NRCA-MCH-04-H- Air Distribution Duct Leakage | ☐ | ☐ |
| | ☒ NRCA-MCH-05-A- Air Economizer Controls | ☐ | ☐ |
| | ☒ NRCA-MCH-06-A- Demand Control Ventilation | ☐ | ☐ |
| | ☐ NRCA-MCH-07-A – Supply Fan Variable Flow Controls | ☐ | ☐ |
| | ☐ NRCA-MCH-08-A- Valve Leakage Test | ☐ | ☐ |
| | ☐ NRCA-MCH-09-A – Supply Water Temp Reset Controls | ☐ | ☐ |
| | ☐ NRCA-MCH-10-A- Hydronic System Variable Flow Controls | ☐ | ☐ |
| | ☐ NRCA-MCH-11-A – Auto Demand Shed Controls | ☐ | ☐ |
| | ☒ NRCA-MCH-12-A- Packaged Direct Expansion Units | ☐ | ☐ |
| | ☐ NRCA-MCH-13-A- Air Handling Units and Zone Terminal Units | ☐ | ☐ |
| | ☐ NRCA-MCH-14-A- Distributed Energy Storage | ☐ | ☐ |
| | ☐ NRCA-MCH-15-A – Thermal Energy Storage | ☐ | ☐ |
| | ☐ NRCA-MCH-16-A- Supply Air Temp Reset Controls | ☐ | ☐ |
| | ☐ NRCA-MCH-17-A – Condensate Water Temp Reset Controls | ☐ | ☐ |
| | ☐ NRCA-MCH-18-A- Energy Management Controls Systems | ☐ | ☐ |
| | ☐ NRCV-MCH-04-H- Duct Leakage Test | ☐ | ☐ |





**H. CERTIFICATE OF INSTALLATION, CERTIFICATE OF ACCEPTANCE & CERTIFICATE OF VERIFICATION SUMMARY (NRCI/NRCA/NRCV) –**
Documentation Author to indicate which Certificates must be submitted for the features to be recognized for compliance
(Retain copies and verify forms are completed and signed to post in field for Field Inspector to verify).
See Tables G. and H. in MCH and LTI Details Sections for Acceptance Tests and forms by equipment.

| Building Component | Compliance Forms *(required for submittal)* | Confirmed Pass | Confirmed Fail |
|---|---|---|---|
| Plumbing | ☐ NRCI-PLB-01-E - For all buildings with Plumbing Systems | ☐ | ☐ |
| | ☐ NRCI-PLB-02-E - required on central systems in high-rise residential, hotel/motel application. | ☐ | ☐ |
| | ☐ NRCI-PLB-03-E - Single dwelling unit systems in high-rise residential, hotel/motel application. | ☐ | ☐ |
| | ☐ NRCI-PLB-21-E - HERS verified central systems in high-rise residential, hotel/motel application. | ☐ | ☐ |
| | ☐ NRCI-PLB-22-E - HERS verified single dwelling unit systems in high-rise residential, hotel/motel application. | ☐ | ☐ |
| | ☐ NRCV-PLB-21-H- HERS verified central systems in high-rise residential, hotel/motel application. | ☐ | ☐ |
| | ☐ NRCV-PLB-22-H - HERS verified single dwelling unit systems in high-rise residential, hotel/motel application. | ☐ | ☐ |
| | ☐ NRCI-STH-01-E - Any solar water heating | ☐ | ☐ |
| Indoor Lighting | ☐ NRCI-LTI-01-E - For all buildings | ☐ | ☐ |
| | ☐ NRCI-LTI-02-E - Lighting control system, or for an Energy Management Control System (EMCS) | ☐ | ☐ |
| | ☐ NRCI-LTI-03-E - Line-voltage track lighting integral current limiter, or for a supplementary overcurrent protection panel used to energize only line-voltage track lighting | ☐ | ☐ |
| | ☐ NRCI-LTI-04-E - Two interlocked systems serving an auditorium, a convention center, a conference room, or a theater | ☐ | ☐ |
| | ☐ NRCI-LTI-05-E - Lighting Control Credit Power Adjustment Factor (PAF) | ☐ | ☐ |
| | ☐ NRCI-LTI-06-E - Additional wattage installed in a video conferencing studio | ☐ | ☐ |
| | ☐ NRCA-LTI-02-A - Occupancy sensors and automatic time switch controls. | ☐ | ☐ |
| | ☒ NRCA-LTI-03-A - Automatic daylighting controls | ☐ | ☐ |
| | ☐ NRCA-LTI-04-A - Demand responsive lighting controls | ☐ | ☐ |
| Outdoor Lighting | ☐ NRCI-LTO-01-E – Outdoor Lighting | ☐ | ☐ |
| | ☐ NRCI-LTO-02-E- EMCS Lighting Control System | ☐ | ☐ |
| | ☐ NRCA-LTO-02-A - Outdoor Lighting Control | ☐ | ☐ |
| Sign Lighting | ☐ NRCI-LTS-01-E – Sign Lighting | ☐ | ☐ |
| Electrical | ☐ NRCI-ELC-01-E - Electrical Power Distribution | ☐ | ☐ |
| Photovoltaic | ☐ NRCI-SPV-01-E Photovoltaic Systems | ☐ | ☐ |





**H. CERTIFICATE OF INSTALLATION, CERTIFICATE OF ACCEPTANCE & CERTIFICATE OF VERIFICATION SUMMARY (NRCI/NRCA/NRCV) –**
Documentation Author to indicate which Certificates must be submitted for the features to be recognized for compliance
(Retain copies and verify forms are completed and signed to post in field for Field Inspector to verify).
See Tables G. and H. in MCH and LTI Details Sections for Acceptance Tests and forms by equipment.

| Building Component | Compliance Forms *(required for submittal)* | Confirmed Pass | Confirmed Fail |
|---|---|---|---|
| Covered Process | ☐ NRCI-PRC-01-E Covered Processes | ☐ | ☐ |
| | ☐ NRCA-PRC-01-F- Compressed Air Systems | ☐ | ☐ |
| | ☐ NRCA-PRC-02-F- Kitchen Exhaust | ☐ | ☐ |
| | ☐ NRCA-PRC-03-F- Garage Exhaust | ☐ | ☐ |
| | ☐ NRCA-PRC-04-F- Refrigerated Warehouse- Evaporator Fan Motor Controls | ☐ | ☐ |
| | ☐ NRCA-PRC-05-F- Refrigerated Warehouse- Evaporative Condenser Controls | ☐ | ☐ |
| | ☐ NRCA-PRC-06-F- Refrigerated Warehouse- Air Cooled Condenser Controls | ☐ | ☐ |
| | ☐ NRCA-PRC-07F- Refrigerated Warehouse- Variable Speed Compressor | ☐ | ☐ |
| | ☐ NRCA-PRC-08-F- Electrical Resistance Underslab Heating System | ☐ | ☐ |

**I. ENVELOPE GENERAL INFORMATION (See NRCC-PRF-ENV-DETAILS for more information)**

| | | | | | |
|---|---|---|---|---|---|
| 1. | Total Conditioned Floor Area | 4,024 ft² | 5. | Number of Floors Above Grade | 1 |
| 2. | Total Unconditioned Floor Area | 0 ft² | 6. | Number of Floors Below Grade | 0 |
| 3. | Addition Conditioned Floor Area | 0 ft² | | | |
| 4. | Addition Unconditioned Floor Area | 0 ft² | | | |

| 7. Opaque Surfaces & Orientation | 8. Total Gross Surface Area | 9. Total Fenestration Area | 10. Window to Wall Ratio | Confirmed Pass | Confirmed Fail |
|---|---|---|---|---|---|
| North Wall | 694 ft² | 0 ft² | 00.0% | ☐ | ☐ |
| East Wall | 1,521 ft² | 993 ft² | 65.3% | ☐ | ☐ |
| South Wall | 1,132 ft² | 0 ft² | 00.0% | ☐ | ☐ |
| West Wall | 274 ft² | 0 ft² | 00.0% | ☐ | ☐ |
| Total | **3,621 ft²** | **993 ft²** | **27.4%** | ☐ | ☐ |
| Roof | 4,024 ft² | 0 ft² | 00.0% | ☐ | ☐ |





**J. FENESTRATION ASSEMBLY SUMMARY** § 110.6

| 1. Fenestration Assembly Name / Tag or I.D. | 2. Fenestration Type / Product Type / Frame Type | 3. Certification Method¹ | 4. Assembly Method | 5. Area ft² | 6. Overall U-factor | 7. Overall SHGC | 8. Overall VT | 9. Status² | Confirmed Pass | Confirmed Fail |
|---|---|---|---|---|---|---|---|---|---|---|
| PPG SOLARBAN 70 XL Clear | VerticalFenestration FixedWindow MetalFraming | COG Equations | SiteBuilt | 993 | 0.28 (COG) | 0.27 (COG) | 0.63 (COG) | N | ☐ | ☐ |

¹ Newly installed fenestration shall have a certified NFRC Label Certificate or use the CEC default tables found in Table 110.6-A and Table 110.6-B. Center of Glass (COG) values are for the glass-only, determined by the manufacturer, and are shown for ease of verification. Site-built fenestration values are calculated per Nonresidential Appendix NA6 and are used in the analysis.
² Status: N - New, A – Altered, E – Existing

| Taking compliance credit for fenestration shading devices? (If "Yes", see NRCC-PRF-ENV-DETAILS for more information) | No |
|---|---|

**K. OPAQUE SURFACE ASSEMBLY SUMMARY** § 120.7/ § 140.3

| 1. Surface Name | 2. Surface Type | 3. Area (ft²) | 4. Framing Type | 5. Cavity R-Value | 6. Continuous R-Value | 7. U-Factor / F-Factor / C-Factor | 8. Status¹ | Confirmed Pass | Confirmed Fail |
|---|---|---|---|---|---|---|---|---|---|
| R-30 Mtl Roof4 | Roof | 807 | NA | 0 | 35 | U-Factor: 0.028 | N | ☐ | ☐ |
| Slab On Grade6 | UndergroundFloor | 4024 | NA | 0 | NA | F-Factor: 0.730 | N | ☐ | ☐ |
| R-25 Wall + Brick8 | ExteriorWall | 2224 | Wood | 25 | NA | U-Factor: 0.057 | N | ☐ | ☐ |
| R-30 Roof No Attic13 | Roof | 683 | Wood | 30 | NA | U-Factor: 0.034 | N | ☐ | ☐ |
| Barrel Metal Deck Roof24 | Roof | 2534 | NA | 0 | 35 | U-Factor: 0.027 | N | ☐ | ☐ |
| R-25 Wal31 | ExteriorWall | 1397 | Wood | 25 | NA | U-Factor: 0.055 | N | ☐ | ☐ |

¹ Status: N - New, A – Altered, E – Existing

**L. ROOFING PRODUCT SUMMARY** § 140.3

| 1. Product Type | 2. Product Density (lb/ft²) | 3. Aged Solar Reflectance | 4. Thermal Emittance | 5. SRI | 6. Cool Roof Credit | 7. Roofing Product Description | Confirmed Pass | Confirmed Fail |
|---|---|---|---|---|---|---|---|---|
| R-30 Mtl Roof4 | 5.836 | 0.20 | 0.75 | Not Provided | Yes | CRRC Prod. ID: R-30 Mtl Roof | ☐ | ☐ |
| R-30 Roof No Attic13 | 5.813 | 0.63 | 0.85 | Not Provided | Yes | CRRC Prod. ID: R-30 Roof No Attic | ☐ | ☐ |
| Barrel Metal Deck Roof24 | 6.759 | 0.08 | 0.75 | NA | No | NA | ☐ | ☐ |





**M. HVAC SYSTEM SUMMARY (see NRCC-PRF-MCH-DETAILS for more information)** § 110.1 / § 110.2

Dry System Equipment ¹ (Fan & Economizer info included below in Table N)

| 1. Equip Name | 2. Equip Type | 3. System Type (Simple ² or Complex ³) | 4. Qty | 5. Total Heating Output (kBtu/h) | 6. Supp Heat Source (Y/N) | 7. Supp Heat Output (kBtuh) | 8. Total Cooling Output (kBtu/h) | 9. Efficiency Cooling | 9. Efficiency Heating | 10. Acceptance Testing Required? (Y/N) ⁴ | 11. Status⁵ | Confirmed Pass | Confirmed Fail |
|---|---|---|---|---|---|---|---|---|---|---|---|---|---|
| AC-4 | SZAC (Packaged3Phase) | Simple | 1 | 48 | No | 0 | 35 | SEER-14.00 / EER-12.20 | AFUE-80.0 | Yes | N | ☐ | ☐ |
| AC-5 | SZAC (Packaged3Phase) | Simple | 1 | 280 | No | 0 | 142 | EER-12.2 | ThrmlEff-80.0 | Yes | N | ☐ | ☐ |

¹ Dry System Equipment includes furnaces, air handling units, heat pumps, etc.
² Simple Systems must complete NRCC-CXR-03-E commissioning design review form
³ Complex Systems must complete NRCC-CXR-04-E commissioning design review form
⁴ A summary of which acceptance tests are applicable is provided in NRCC-PRF-MCH-DETAILS
⁵ Status: N - New, A – Altered, E – Existing

Wet System Equipment Section Does Not Apply

| Discrepancy between modeled and designed equipment sizing? (If "Yes", see Table F. "Additional Remarks" for an explanation) | No |
|---|---|

**N. ECONOMIZER & FAN SYSTEMS SUMMARY¹** § 140.4

| 1. Equip Name | 2. Outside Air CFM | 3. Supply Fan CFM | Supply Fan HP | Supply Fan BHP | Supply Fan TSP (inch WC) | Supply Fan Control | 4. Return Fan CFM | Return Fan HP | Return Fan BHP | Return Fan TSP (inch WC) | Return Fan Control | 5. Economizer Type (if present) | Confirmed Pass | Confirmed Fail |
|---|---|---|---|---|---|---|---|---|---|---|---|---|---|---|
| AC-4 | 224 | 960 | 0.270 | 0.270 | 0.89 | ConstantVolume | NA | NA | NA | NA | NA | NoEconomizer | ☐ | ☐ |
| AC-5 | 1267 | 4200 | 1.800 | 1.800 | 1.63 | ConstantVolume | NA | NA | NA | NA | NA | FixedDryBulb | ☐ | ☐ |

¹ Mechanical ventilation calculations and exhaust fans are included in the NRCC-PRF-MCH-DETAILS section



JOB COPY
These plans mu… be k… … the job at all times.
CITY OF MORGAN HILL
BUILDING DIVISION

WESTON MILES
ARCHITECTS
17500 Depot Street, Suite #120
Morgan Hill, CA 95037
1 • 408 • 779 • 6686
• Architecture • Landscape •

LICENSED ARCHITECT — LESLEY L. MILES — RENEWAL 9-30-19 — STATE OF CALIFORNIA
NOT VALID WITHOUT SIGNATURE

HM MECHANICAL GROUP
8517 Earhart Rd, Suite 230
Oakland, CA 94621
510-569-2000

CONSULTANT JOB NO.: 17120

REGISTERED PROFESSIONAL ENGINEER — GARY L. HENNINGS — No. M20245 — 1/29/2019 — MECHANICAL — STATE OF CALIFORNIA

REVISIONS
1

# TITLE 24

## CENTENNIAL RECREATION CENTER EXPANSION PROJECT

CITY OF MORGAN HILL
171 W EDMUNDSON AVE, MORGAN HILL, CA 95037

These drawings are instruments of service and are the property of WESTON MILES ARCHITECTS, INC. All designs and other information on the drawings are for use on the specified project and shall not be used otherwise without the expressed written permission of WESTON MILES ARCHITECTS, INC.

Written dimensions on these drawings shall have precedence over scaled dimensions. Contractors shall verify and be responsible for all dimensions and conditions on the job and this office shall be notified of any variations from the dimensions and conditions shown by these drawings. Shop details shall be submitted to this office for approval before proceeding with fabrication.

© Copyrighted 2018

DATE: 11/10/2018
JOB NO: 18001

T24.1

| Project Name: | CRC | NRCC-PRF-01-E | Page 10 of 18 |
|---|---|---|---|
| Project Address: | 171 W Edmundson Ave Morgan Hill 95037 | Calculation Date/Time: | 15:31, Tue, Jan 29, 2019 |
| Compliance Scope: | NewEnvelopeAndMechanical | Input File Name: | CRC.cibd16x |

**O. EQUIPMENT CONTROLS** § 120.2

| 1. Equip Name | 2. Equip Type | 3. Controls | Confirmed Pass | Fail |
|---|---|---|---|---|
| AC-4 | SZAC | No DCV Controls<br>No Economizer<br>No Supply Air Temp. Control<br>No Optimum Start<br>No Evaporative Cooler<br>No Heat Recovery | ☐ | ☐ |
| AC-5 | SZAC | 1 Zones With CO2Sensor Vent. Control<br>Fixed Drybulb Economizer<br>No Supply Air Temp. Control<br>No Optimum Start<br>No Evaporative Cooler<br>No Heat Recovery | ☐ | ☐ |

**P. SYSTEM DISTRIBUTION SUMMARY** § 120.4/ § 140.4(l)

| 1. Equip Name | 2. Equip Type | 3. Duct Leakage and Sealing Required per 140.4(l) | 4. Duct Leakage will be verified per NA1 and NA2 | 5. Ducts Insulation R-Value | Ducts Location | 6. Status[1] | Pass | Fail |
|---|---|---|---|---|---|---|---|---|
| AC-4 | SZAC | No | No | 4.2 | Conditioned | N | ☐ | ☐ |
| AC-5 | SZAC | No | No | 4.2 | Conditioned | N | ☐ | ☐ |

[1] Status: N - New, E – Existing

| | |
|---|---|
| Does the Project Include Zonal Systems? (If "Yes", see NRCC-PRF-MCH-DETAILS for system information) | No |
| Does the Project Include a Solar Hot Water System? (If "Yes", see NRCC-PRF-MCH-DETAILS for system information) | No |
| Multifamily or Hotel/ Motel Occupancy? (If "Yes", see NRCC-PRF-MCH-DETAILS for DHW system information) | No |

**Q. INDOOR CONDITIONED LIGHTING GENERAL INFO** (see NRCC-PRF-LTI-DETAILS for more info)

This Section Does Not Apply



| Project Name: | CRC | NRCC-PRF-01-E | Page 11 of 18 |
|---|---|---|---|
| Project Address: | 171 W Edmundson Ave Morgan Hill 95037 | Calculation Date/Time: | 15:31, Tue, Jan 29, 2019 |
| Compliance Scope: | NewEnvelopeAndMechanical | Input File Name: | CRC.cibd16x |

**R. INDOOR CONDITIONED LIGHTING SCHEDULE** (Adapted from NRCC-LTI-01-E)[1] § 130.0

This Section Does Not Apply

[1] If lighting power densities were used in the compliance model Building Departments will need to check prescriptive forms for Luminaire Schedule details.

**S1. COVERED PROCESS SUMMARY – ENCLOSED PARKING GARAGES** § 140.9

This Section Does Not Apply

**S2. COVERED PROCESS SUMMARY – COMMERCIAL KITCHENS** § 140.9

This Section Does Not Apply

**S3. COVERED PROCESS SUMMARY – COMPUTER ROOMS** § 140.9

This Section Does Not Apply

**S4. COVERED PROCESS SUMMARY – LABORATORY EXHAUSTS** § 140.9

This Section Does Not Apply

**T. UNMET LOAD HOURS**

| Thermal Zone Name | Cooling Unmet Load Hour Limit for Thermal Zone | Proposed Cooling Unmet Load Hours | Heating Unmet Load Hour Limit for Thermal Zone | Proposed Heating Unmet Load Hours |
|---|---|---|---|---|
| 2-Office | 150 | 3582.75 | 150 | 0 |

**U. ENERGY USE SUMMARY**

| Energy Component | Standard Design Site (MWh) | Proposed Design Site (MWh) | Margin (MWh) | Standard Design Site (MBtu) | Proposed Design Site (MBtu) | Margin (MBtu) |
|---|---|---|---|---|---|---|
| Space Heating | -- | -- | -- | 6.6 | 11.6 | -5.0 |
| Space Cooling | 7.1 | 5.5 | 1.6 | -- | -- | -- |
| Indoor Fans | 22.3 | 10.5 | 11.8 | -- | -- | -- |
| Heat Rejection | -- | -- | -- | -- | -- | -- |
| Pumps & Misc. | -- | -- | -- | -- | -- | -- |
| Domestic Hot Water | -- | -- | -- | 11.7 | 11.7 | 0.0 |
| Indoor Lighting | 13.3 | 13.3 | 0.0 | -- | -- | -- |



| Project Name: | CRC | NRCC-PRF-01-E | Page 12 of 18 |
|---|---|---|---|
| Project Address: | 171 W Edmundson Ave Morgan Hill 95037 | Calculation Date/Time: | 15:31, Tue, Jan 29, 2019 |
| Compliance Scope: | NewEnvelopeAndMechanical | Input File Name: | CRC.cibd16x |

**U. ENERGY USE SUMMARY**

| Energy Component | Standard Design Site (MWh) | Proposed Design Site (MWh) | Margin (MWh) | Standard Design Site (MBtu) | Proposed Design Site (MBtu) | Margin (MBtu) |
|---|---|---|---|---|---|---|
| **COMPLIANCE TOTAL** | **42.7** | **29.3** | **13.4** | **18.3** | **23.3** | **-5.0** |
| Receptacle | 12.2 | 12.2 | 0.0 | -- | -- | -- |
| Process | -- | -- | -- | -- | -- | -- |
| Other Ltg | -- | -- | -- | -- | -- | -- |
| Process Motors | -- | -- | -- | -- | -- | -- |
| **TOTAL** | **54.9** | **41.5** | **13.4** | **18.3** | **23.3** | **-5.0** |



| Project Name: | CRC | NRCC-PRF-01-E | Page 13 of 18 |
|---|---|---|---|
| Project Address: | 171 W Edmundson Ave Morgan Hill 95037 | Calculation Date/Time: | 15:31, Tue, Jan 29, 2019 |
| Compliance Scope: | NewEnvelopeAndMechanical | Input File Name: | CRC.cibd16x |

**DOCUMENTATION AUTHOR'S DECLARATION STATEMENT** § 10-103

I certify that this Certificate of Compliance documentation is accurate and complete.

| | |
|---|---|
| Documentation Author Name: Gary Hennings | Signature: |
| Company: H & M Mechanical Group | Signature Date: 1/29/2019 |
| Address: 8517 Earhart Rd #230 | CEA Identification (If applicable): |
| City/State/Zip: Oakland CA 94621 | |
| Phone: 510.569.2000 | |

**RESPONSIBLE PERSON'S DECLARATION STATEMENT**

I certify the following under penalty of perjury, under the laws of the State of California:

1. I hereby affirm that I am eligible under the provisions of Division 3 of the Business and Professions Code to sign this document as the person responsible for its preparation; and that I am licensed in the State of California as a civil engineer, mechanical engineer, electrical engineer, or I am a licensed architect.
2. I affirm that I am eligible under the provisions of Division 3 of the Business and Professions Code by section 5537.2 or 6737.3 to sign this document as the person responsible for its preparation; and that I am a licensed contractor performing this work.
3. I affirm that I am eligible under Division 3 of the Business and Professions Code to sign this document because it pertains to a structure or type of work described as exempt pursuant to Business and Professions Code Sections 5537, 5538 and 6737.1.

| | |
|---|---|
| Responsible Envelope Designer Name: | Signature: |
| Company: Weston Miles Architects | Date Signed: 04/18/2019 |
| Address: 1700 Depot Street, #120 | Declaration Statement Type: |
| City/State/Zip: Morgan Hill CA 95037 | Title: License #: C26,458 |
| Phone: 408.779.6686 | |
| Responsible Lighting Designer Name: | Signature: NOT IN SCOPE |
| Company: | Date Signed: |
| Address: | Declaration Statement Type: |
| City/State/Zip: | Title: License #: |
| Phone: | |
| Responsible Mechanical Designer Name: Gary Hennings | Signature: |
| Company: H&M Mechanical Group | Date Signed: 1/29/2019 |
| Address: 8517 Earhart Rd #230 | Declaration Statement Type: 1 |
| City/State/Zip: Oakland CA 94621 | Title: MEOR License #: M20245 |
| Phone: 510.569.2000 | |



| Project Name: | CRC | NRCC-PRF-01-E | Page 14 of 18 |
|---|---|---|---|
| Project Address: | 171 W Edmundson Ave Morgan Hill 95037 | Calculation Date/Time: | 15:31, Tue, Jan 29, 2019 |
| Compliance Scope: | NewEnvelopeAndMechanical | Input File Name: | CRC.cibd16x |

**NRCC-PRF-ENV-DETAILS -SECTION START-**

**A. OPAQUE SURFACE ASSEMBLY DETAILS**

| 1. Surface Name | 2. Surface Type | 3. Description of Assembly Layers | 4. Notes | Pass | Fail |
|---|---|---|---|---|---|
| R-30 Mtl Roof4 | Roof | Metal Standing Seam - 1/16 in.<br>Cellular polyisocyanurate (unfaced) - 3 in. R18<br>Cellular polyisocyanurate (unfaced) - 3 in. R18<br>Metal Deck - 1/16 in. | | ☐ | ☐ |
| Slab On Grade6 | UndergroundFloor | Slab Type = UnheatedSlabOnGrade<br>Insulation Orientation = None<br>Insulation R-Value = R0 | | ☐ | ☐ |
| R-25 Wall + Brick8 | ExteriorWall | Stucco - 7/8 in.<br>Vapor permeable felt - 1/8 in.<br>Wood framed wall, 16in. OC, 7.25in., R-25<br>Gypsum Board - 1/2 in. | | ☐ | ☐ |
| R-30 Roof No Attic13 | Roof | Asphalt shingles - 1/4 in.<br>Vapor permeable felt - 1/8 in.<br>Plywood - 1/2 in.<br>Air - Cavity - Wall Roof Ceiling - 4 in. or more<br>Wood framed roof, 16in. OC, 11.25in., R-30<br>Gypsum Board - 1/2 in. | | ☐ | ☐ |
| Barrel Metal Deck Roof24 | Roof | Built-up roofing - 3/8 in.<br>Cellular polyisocyanurate (unfaced) - 6 in. R35<br>Plywood - 1/2 in.<br>Metal Deck - 1/16 in. | | ☐ | ☐ |
| R-25 Wal31 | ExteriorWall | Stucco - 7/8 in.<br>Vapor permeable felt - 1/8 in.<br>Wood framed wall, 24in. OC, 7.25in., R-25<br>Gypsum Board - 1/2 in. | | ☐ | ☐ |

**B. OVERHANG DETAILS (Adapted from NRCC-ENV-02-E)**

This Section Does Not Apply



| Project Name: | CRC | NRCC-PRF-01-E | Page 15 of 18 |
|---|---|---|---|
| Project Address: | 171 W Edmundson Ave Morgan Hill 95037 | Calculation Date/Time: | 15:31, Tue, Jan 29, 2019 |
| Compliance Scope: | NewEnvelopeAndMechanical | Input File Name: | CRC.cibd16x |

**C. OPAQUE DOOR SUMMARY**

| 1. Opaque Door Assembly Name / Tag or I.D. | 2. Door Type | 3. Certification Method | 4. Operation | 5. Area | 6. Overall U-factor | 7. Status[1] | Pass | Fail |
|---|---|---|---|---|---|---|---|---|
| Metal Door10 | MetalUninsulatedDoubleLayerDoor | DefaultPerformance | Swinging | 60 | 0.700 | N | ☐ | ☐ |

[1] Status: N - New, A – Altered, E – Existing

**NRCC-PRF-MCH-DETAILS -SECTION START-**

**A. MECHANICAL VENTILATION AND REHEAT *(Adapted from 2016-NRCC-MCH-03-E)***

1. DESIGN AIR FLOWS / 2. VENTILATION (§ 120.1)

| CONDITIONED ZONE NAME | HEATING/COOLING SYSTEM ID | DESIGN PRIMARY AIR FLOW (CFM) | DESIGN PRIMARY MINIMUM AIR FLOW (CFM) | MINIMUM PRIMARY AIR FLOW FRACTION | MAXIMUM HEATING AIR FLOW (CFM) | MAXIMUM HEATING AIR FLOW FRACTION | DDC CONTROL (Y/N) | VENT SYSTEM ID | CONDITIONED AREA (ft2) | MIN. VENT PER AREA (CFM/ft2) | DESIGN NUM. OF PEOPLE | MIN. VENT PER PERSON (CFM/person) | REQ'D VENT AIR FLOW (CFM) | DESIGN VENT AIR FLOW (CFM) | TRANSFER AIRFLOW (CFM) | DCV (Y/N) | Operable Window Interlock § 140.4(n) (Y/N) | Pass | Fail |
|---|---|---|---|---|---|---|---|---|---|---|---|---|---|---|---|---|---|---|---|
| 1-Hallway | AC-4 | 520 | NA | 0.00 | NA | NA | N | AC-4 | 807 | NA | 4.04 | 30.00 | 121 | 121 | NA | N | NA | ☐ | ☐ |
| 2-Office | AC-4 | 175 | NA | 0.00 | NA | NA | N | AC-4 | 271 | NA | 1.35 | 30.00 | 41 | 41 | NA | N | NA | ☐ | ☐ |
| 3-Storage | AC-4 | 265 | NA | 0.00 | NA | NA | N | AC-4 | 412 | NA | 0.41 | 150.00 | 62 | 62 | NA | N | NA | ☐ | ☐ |
| 4-Studio | AC-5 | 4,200 | NA | 0.00 | NA | NA | N | AC-5 | 2,534 | NA | 84.47 | 15.00 | 1,267 | 1,267 | NA | Y | NA | ☐ | ☐ |
| | | | | | | | | TOTAL | 4,024 | | 90.27 | | 1,491 | 1,491 | | | | ☐ | ☐ |



| Project Name: | CRC | NRCC-PRF-01-E | Page 16 of 18 |
|---|---|---|---|
| Project Address: | 171 W Edmundson Ave Morgan Hill 95037 | Calculation Date/Time: | 15:31, Tue, Jan 29, 2019 |
| Compliance Scope: | NewEnvelopeAndMechanical | Input File Name: | CRC.cibd16x |

**B. ZONAL SYSTEM AND TERMINAL UNIT SUMMARY** § 140.4

| 1. System ID | 2. System Type | 3. Qty | 4. Rated Capacity (kBtuh) Heating | Cooling | 5. Economizer | 6. Zone Name | 7. Airflow (cfm) Design | Min. | Min. Ratio | 8. Fan BHP | Cycles | ECM Motor | Pass | Fail |
|---|---|---|---|---|---|---|---|---|---|---|---|---|---|---|
| 3-Storage-Trm | Uncontrolled | 1 | NA | NA | NA | 3-Storage | 265 | NA | 0.00 | NA | NA | ☐ | ☐ | ☐ |
| 2-Office-Trm | Uncontrolled | 1 | NA | NA | NA | 2-Office | 175 | NA | 0.00 | NA | NA | ☐ | ☐ | ☐ |
| 1-Hallway-Trm | Uncontrolled | 1 | NA | NA | NA | 1-Hallway | 520 | NA | 0.00 | NA | NA | ☐ | ☐ | ☐ |
| 4-Studio-Trm | Uncontrolled | 1 | NA | NA | NA | 4-Studio | 4200 | NA | 0.00 | NA | NA | ☐ | ☐ | ☐ |

**C. EXHAUST FAN SUMMARY**

This Section Does Not Apply

**D. DHW EQUIPMENT SUMMARY – *(Adapted from NRCC-PLB-01)***

This Section Does Not Apply

**E. MULTI-FAMILY CENTRAL DHW SYSTEM DETAILS**

This Section Does Not Apply

**F. SOLAR HOT WATER HEATING SUMMARY (Adapted from NRCC-STH-01)**

This Section Does Not Apply



| Project Name: | CRC | NRCC-PRF-01-E | Page 17 of 18 |
|---|---|---|---|
| Project Address: | 171 W Edmundson Ave Morgan Hill 95037 | Calculation Date/Time: | 15:31, Tue, Jan 29, 2019 |
| Compliance Scope: | NewEnvelopeAndMechanical | Input File Name: | CRC.cibd16x |

**G. MECHANICAL HVAC ACCEPTANCE TESTS & FORMS *(Adapted from 2016-NRCC-MCH-01-E)*** § RA4

**Declaration of Required Acceptance Certificates (NRCA)** – Acceptance Certificates that may be submitted. (Retain copies and verify forms are completed and signed to post in field for Field Inspector to verify).

| Equipment Requiring Testing or Verification | # of units | MCH-02A Outdoor Air | MCH-03A Single Zone Unitary | MCH-04A Air Dist. Ducts | MCH-05A Economizer Controls | MCH-06A DCV | MCH-07A Supply Fan VAV | MCH-08A Valve leakage | MCH-09A Supply Water Temp. Reset | MCH-10A Hyd. Variable Flow Control | MCH-11A Auto Demand Shed Control | MCH-12A FDD for DX Units | MCH-13A Auto FDD for Air & Zone | MCH-14A Dist. Energy Storage DX AC | MCH-15A TES Systems | MCH-16A Supply Air Temp. Reset | MCH-17A Condenser Water Reset Controls | MCH-18A ECMS | Pass | Fail |
|---|---|---|---|---|---|---|---|---|---|---|---|---|---|---|---|---|---|---|---|---|
| AC-4 | 1 | X | X | -- | -- | -- | -- | -- | -- | -- | -- | -- | -- | -- | -- | -- | -- | -- | ☐ | ☐ |
| AC-5 | 1 | X | X | -- | X | X | -- | -- | -- | -- | -- | X | -- | -- | -- | -- | -- | -- | ☐ | ☐ |

**H. EVAPORATIVE COOLER SUMMARY**

This Section Does Not Apply

**NRCC-PRF-LTI-DETAILS -SECTION START-**

**A. INDOOR CONDITIONED LIGHTING CONTROL CREDITS (Adapted from NRCC-LTI-02-E)** § 140.6

This Section Does Not Apply

**B. INDOOR CONDITIONED LIGHTING MANDATORY LIGHTING CONTROLS (Adapted from NRCC-LTI-02-E)** § 130.1

This Section Does Not Apply

**C. TAILORED METHOD CONDITIONED LIGHTING POWER ALLOWANCE SUMMARY AND CHECKLIST (Adapted from NRCC-LTI-04-E)** § 140.6

This Section Does Not Apply

**D. GENERAL LIGHTING POWER (Adapted from NRCC-LTI-04-E)** § 140.6-D

This Section Does Not Apply



| Project Name: | CRC | NRCC-PRF-01-E | Page 18 of 18 |
|---|---|---|---|
| Project Address: | 171 W Edmundson Ave Morgan Hill 95037 | Calculation Date/Time: | 15:31, Tue, Jan 29, 2019 |
| Compliance Scope: | NewEnvelopeAndMechanical | Input File Name: | CRC.cibd16x |

**E. GENERAL LIGHTING FROM SPECIAL FUNCTION AREAS (Adapted from NRCC-LTI-04-E)** § 140.6(c) 3H

This Section Does Not Apply

**F. ROOM CAVITY RATIO (Adapted from NRCC-LTI-04-E)**

This Section Does Not Apply

**G. ADDITIONAL "USE IT OR LOSE IT" (Adapted from NRCC-LTI-04-E)**

This Section Does Not Apply

**H. INDOOR & OUTDOOR LIGHTING ACCEPTANCE TESTS & FORMS (Adapted from NRCC-LTI-01-E and NRCC-LTO-01-E)** § 130.4

This Section Does Not Apply

JOB COPY
These plans mu[illegible] job at all times.
CITY OF MORGAN HILL
BUILDING DIVISION



WESTON MILES ARCHITECTS
17500 Depot Street, Suite #120
Morgan Hill, CA 95037
1 • 408 • 779 • 6686
• Architecture • Landscape •

NOT VALID WITHOUT SIGNATURE

H M MECHANICAL GROUP
8517 Earhart Rd, Suite 230
Oakland, CA 94621
510-569-2000

CONSULTANT JOB NO.: 17120

REVISIONS

# TITLE 24

## CENTENNIAL RECREATION CENTER EXPANSION PROJECT

CITY OF MORGAN HILL
171 W EDMUNDSON AVE, MORGAN HILL, CA 95037

These drawings are instruments of service and are the property of WESTON MILES ARCHITECTS, INC. All designs and other information on the drawings are for use on the specified project and shall not be used otherwise without the expressed written permission of WESTON MILES ARCHITECTS, INC.

Written dimensions on these drawings shall have precedence over scaled dimensions. Contractors shall verify and be responsible for all dimensions and conditions on the job and this office shall be notified of any variations from the dimensions and conditions shown by these drawings. Shop details shall be submitted to this office for approval before proceeding with fabrication.

© Copyrighted 2018

DATE: 11/10/2018

JOB NO: 18001

T24.2

## ENVELOPE MANDATORY MEASURES: NONRESIDENTIAL — ENV-MM

Project Name: *Centennial Recreation Center Expansion Project*

Date: *1/29/2019*

### DESCRIPTION

**Building Envelope Measures:**

| | |
|---|---|
| §110.8(a): | Installed insulating material shall have been certified by the manufacturer to comply with the California Quality Standards for insulating material, Title 20 Chapter 4, Article 3. |
| §110.8(c): | All Insulating Materials shall be installed in compliance with the flame spread rating and smoke density requirements of Sections 2602 and 707 of Title 24, Part 2. |
| §110.8(g): | Heated slab floors shall be insulated according to the requirements in Table 110.8-A. |
| §110.7(a): | All Exterior Joints and openings in the building that are observable sources of air leakage shall be caulked, gasketed, weatherstripped or otherwise sealed. |
| §110.6(a): | Manufactured fenestration products and exterior doors shall have air infiltration rates not exceeding 0.3 cfm/ft.$^2$ of window area, 0.3 cfm/ft.$^2$ of door area for residential doors, 0.3 cfm/ft.$^2$ of door area for nonresidential single doors (swinging and sliding), and 1.0 cfm/ft.$^2$ for nonresidential double doors (swinging). |
| §110.6(a): | Fenestration U-factor shall be rated in accordance with NFRC 100, or the applicable default U-factor. |
| §110.6(a) : | Fenestration SHGC shall be rated in accordance with NFRC 200, or NFRC 100 for site-built fenestration, or the applicable default SHGC. |
| §110.6(b): | Site Constructed Doors, Windows and Skylights shall be caulked between the unit and the building, and shall be weatherstripped (except for unframed glass doors and fire doors). |
| §120.7(a): | The opaque portions of the roof/ceiling that separates conditioned spaces from unconditioned spaces or ambient air shall meet the applicable U-Factor requirements as follows:<br><br>**Metal Building-** The weighted average U-factor of the roof assembly shall not exceed 0.098.<br>**Wood Framed and Others-** The weighted average U-factor of the roof assembly shall not exceed 0.075. |
| §120.7(b): | The opaque portions of walls that separate conditioned spaces from unconditioned spaces or ambient air shall meet the applicable U-factor as follows:<br><br>**Metal Building-** The weighted average U-factor of the wall assembly shall not exceed 0.113.<br>**Metal Framed-** The weighted average U-factor of the wall assembly shall not exceed 0.151.<br>**Light Mass Walls-** A 6 inch or greater Hollow Core Concrete Masonry Unit shall have a U-factor not to exceed 0.440.<br>**Heavy Mass Walls-** An 8 inch or greater Hollow Core Concrete Masonry Unit shall have a U-factor not to exceed 0.690.<br>**Wood Framed and Others-** The weighted average U-factor of the wall assembly shall not exceed 0.110.<br>**Spandrel Panels and Opaque Curtain Wall-** The weighted average U-factor of the spandrel panels and opaque curtain wall assembly shall not exceed 0.280.<br>**Demising Walls-**. The opaque portions of framed demising walls shall meet the requirements of Item A or B below:<br>A. Wood framed walls shall be insulated to meet a U-factor not greater than 0.099.<br>B. Metal Framed walls shall be insulated to meet a U-factor not greater than 0.151. |
| §120.7(c): | The opaque portions of floors and soffits that separate conditioned spaces from unconditioned spaces or ambient air shall meet the applicable U-Factor requirements as follows:<br><br>**Raised Mass Floors-** Shall have a minimum of 3 inches of lightweight concrete over a metal deck or the weighted average U-factor of the floor assembly shall not exceed 0.269.<br>**Other Floors-**The weighted average U-factor of the floor assembly shall not exceed 0.071. |

JOB COPY
These plans must be kept on the job at all times.
CITY OF MORGAN HILL
BUILDING DIVISION


WESTON MILES
ARCHITECTS
17500 Depot Street, Suite #120
Morgan Hill, CA 95037
1 • 408 • 779 • 6686
• Architecture • Landscape •


REGISTERED ARCHITECT JERRY L. WESTON No. 5-29-19 STATE OF CALIFORNIA

NOT VALID WITHOUT SIGNATURE


HM MECHANICAL GROUP
8517 Earhart Rd, Suite 230
Oakland, CA 94621
510-569-2000


CONSULTANT JOB NO: 17120

REGISTERED PROFESSIONAL ENGINEER JERRY L. HENNIG No. M20045 1/29/2019 MECHANICAL STATE OF CALIFORNIA

REVISIONS

1

# TITLE 24

## CENTENNIAL RECREATION CENTER EXPANSION PROJECT

CITY OF MORGAN HILL
171 W EDMUNDSON AVE, MORGAN HILL, CA 95037


These drawings are instruments of service and are the property of WESTON MILES ARCHITECTS, INC. All designs and other information on the drawings are for use on the specified project only and shall not be used otherwise without the expressed written permission of WESTON MILES ARCHITECTS, INC.

Written dimensions on these drawings shall have precedence over scaled dimensions. Contractors shall verify and be responsible for all dimensions and conditions on the job and this office shall be notified of any variances from the dimensions and conditions shown on these drawings. Shop details shall be submitted to this office for approval before proceeding with fabrication.

© Copyrighted 2018


DATE: 11/10/2018

JOB NO: 18001

T24.3

## LIST OF APPLICABLE CODES

| |
|---|
| LIST OF CODES AND STANDARDS MODEL CODE EDITIONS EFFECTIVE JANUARY 1, 2016 |
| 2016 CA BUILDING CODE TITLE 24 PART 2 VOLUME #1 AND #2 |
| 2016 CA ELECTRICAL CODE TITLE 24 PART 3 |
| 2016 CA MECHANICAL CODE TITLE 24 PART 4 |
| 2016 CA PLUMBING CODE TITLE 24 PART 5 |
| 2016 CA FIRE CODE TITLE 24 PART 9 |
| 2016 CA BUILDING STANDARDS TITLE 24 PART 9 |

## SHEET LIST

| | |
|---|---|
| P0.1 | PLUMBING: NOTES, LEGEND & DETAILS |
| P2.0 | PLUMBING: PLANS |

## GENERAL NOTES

1. BEFORE COMMENCEMENT OF WORK, THE CONTRACTOR SHALL VERIFY THE EXACT LOCATIONS, ELEVATIONS AND CHARACTERISTICS OF ALL UTILITIES AND PIPING, AND SHALL IMMEDIATELY NOTIFY THE ARCHITECT OF ANY DISCREPANCIES.
2. EXACT LOCATIONS AND MOUNTING HEIGHTS OF PLUMBING FIXTURES SHALL BE OBTAINED FROM THE ARCHITECTURAL DRAWINGS.
3. SEE ARCHITECTURAL DRAWINGS FOR ADA FIXTURE LOCATIONS AND MOUNTING HEIGHTS. (INSULATE ALL EXPOSED HOT AND COLD WATER AND DRAIN PIPING BELOW ADA LAVATORIES AND SINKS AND OFFSET P-TRAP AGAINST WALL. ALSO, ALL FLUSH VALVES SHALL BE TO WIDE SIDE OF STALL.)
4. TRAPS FOR ALL LAVATORIES AND SINKS SHALL TRAP STRAIGHT BACK TO WALL WITH ALL REQUIRED OFFSETS HAPPENING WITHIN THE WALL.
5. THE CONTRACTOR SHALL MAKE ALL ARRANGEMENTS WITH UTILITY COMPANIES FOR SERVICE IN THE NAME OF THE OWNER AND SHALL PAY ALL MATERIAL AND LABOR COSTS INCIDENTAL TO AN OPERABLE UTILITY SERVICE AS REQUIRED BY THE DESIGNATED GOVERNING AUTHORITIES OF THE CITY.
6. ALL PLUMBING WORK SHALL BE INSTALLED SO AS TO AVOID INTERFERENCE WITH ELECTRICAL AND MECHANICAL EQUIPMENT AND STRUCTURAL FRAMING.
7. THE CONTRACTOR SHALL COORDINATE THE LOCATION OF ALL CEILING ACCESS PANELS WITH THE ARCHITECTURAL REFLECTED CEILING PLANS AND THE ELEC. LIGHTING LAYOUT.
8. THE PLUMBING CONTRACTOR SHALL PROVIDE THE WATER, SEWER AND STORM DRAIN SYSTEMS TO A POINT OF CONNECTION SHOWN ON FLOOR PLANS AND SHALL MEET THE INVERT ELEVATION AS FIELD VERIFIED WHILE MAINTAINING REQUIRED PIPE GRADE.
9. ANY ALTERATIONS TO A STRUCTURAL MEMBER, SUCH AS CUTTING, BORING, BRAZING, DRILLING, WELDING, ETC. SHALL HAVE PRIOR WRITTEN APPROVAL OF ARCHITECT AND STRUCTURAL ENGINEER.
10. ALL CLEANOUTS SHALL BE INSTALLED WHERE READILY ACCESSIBLE. THE CONTRACTOR SHALL COORDINATE ALL CLEANOUT LOCATIONS WITH EQUIPMENT, CABINETS, ETC., AND THE ARCHITECT PRIOR TO ANY INSTALLATION.
11. CONTRACTOR TO PROVIDE WATER HAMMER ARRESTORS AS MANUFACTURED BY JAY R. SMITH. WATER HAMMER ARRESTORS SHALL BE INSTALLED PER MANUFACTURER'S RECOMMENDATIONS ON ALL DOMESTIC WATER BRANCH LINES SERVING FIXTURES.
12. ALL PLUMBING FIXTURE VENTS TO TERMINATE A MIN. OF 12 INCHES FROM ANY VERTICAL SURFACE AND 10 FEET FROM ANY OUTSIDE AIR INTAKES.
13. ALL VALVES, UNIONS, ETC. TO BE SAME SIZE AS PIPE UNLESS OTHERWISE INDICATED ON DRAWINGS.
14. CONTRACTOR SHALL COORDINATE LAYOUT OF ALL BELOW GRADE PIPING AND COMPONENTS WITH GENERAL CONTRACTOR PRIOR TO BID TO DETERMINE EXTENT OF REQUIRED SAW CUTTING, EXCAVATION, AND SUBSEQUENT REPAIR/RESTORATION OF ALL AFFECTED HARDSCAPE AND SOFTSCAPE SURFACES. ALL SUCH ITEMS SHALL BE INCLUDED IN BID.
15. BEFORE FABRICATION OR INSTALLATION THE CONTRACTOR SHALL VERIFY EXACT LOCATIONS OF ALL MECHANICAL EQUIPMENT AND EQUIPMENT PROVIDED UNDER ANOTHER SECTION OF SPECIFICATIONS. EXACT ROUGH-IN LOCATIONS AND REQUIREMENTS SHALL BE COORDINATED IN FIELD.
16. ALL POINTS OF CONNECTION SHALL BE COORDINATED WITH THE GENERAL CONTRACTOR PRIOR TO BID.
17. ALL WASTE AND VENT PIPING SHALL SLOPE AT 2% UNLESS OTHERWISE INDICATED.
18. ALL VALVES, WATER HAMMER ARRESTORS OR OTHER EQUIPMENT SHOWN IN WALLS OR ABOVE NON-ACCESSIBLE CEILINGS SHALL BE INSTALLED BEHIND AN ACCESS PANEL.
19. THESE DRAWINGS SHALL BE READ IN CONJUNCTION WITH AND BE CONSIDERED TO BE A PART OF SEPARATE AND COMPLETE MECHANICAL SPECIFICATIONS.
20. CONNECTION BETWEEN INCOMPATIBLE MATERIALS ABOVE GRADE AND INSIDE BUILDING SHALL BE MADE WITH TWO (2) DIELECTRIC UNIONS SEPARATED BY A SIX INCH (6") SECTION OF RED BRASS PIPE.
21. ALL EXTERIOR GAS COCKS, WATER SHUT OFF VALVES AND/OR SEWER CLEANOUTS BELOW GROUND SHALL BE INSTALLED IN YARD BOXES WITH THE COVERS CONSPICUOUSLY MARKED "GAS", "WATER", AND "SEWER" RESPECTIVELY.
22. THE CONTRACTOR SHALL VERIFY THE EXACT ELEVATIONS AND LOCATION OF EXISTING DRAINAGE SYSTEM PIPING PRIOR TO CONNECTION OF ANY PIPING.
23. ALL HORIZONTAL PIPING LINES EXTENDED AND CONNECTED TO EQUIPMENT SHALL BE RUN AT THE HIGHEST POSSIBLE ELEVATIONS AND NOT LESS THAN 6" ABOVE THE FLOOR TO PROVIDE CLEARANCE FOR CLEANING. AT WALL OR COLUMN LOCATIONS, PIPING ROUGH-IN SHALL BE STUBBED IN WALLS WHENEVER POSSIBLE.
24. THE CONTRACTOR SHALL BE RESPONSIBLE FOR PATCHING AND REPAIRING ALL AREAS WHICH ARE DAMAGED BY HIS OPERATIONS. IN ADDITION, THE CONTRACTOR SHALL RESTORE TO THEIR ORIGINAL CONDITION ALL EXISTING TO REMAIN STRUCTURE AND NEW CONSTRUCTION DAMAGED BY HIS OPERATIONS.
25. THE CONTRACTOR SHALL BE RESPONSIBLE FOR PATCHING AND REPAIRING ALL PAVED AREAS WHICH ARE EXCAVATED AND/OR DAMAGED BY HIS OPERATIONS. IN ADDITION, THE CONTRACTOR SHALL RESTORE TO THEIR ORIGINAL CONDITION ALL PLANTED AREAS DAMAGED BY HIS OPERATIONS.
26. ALL PATCHING AND REPAIRING OF CONCRETE PAVING AND/OR WALKS SHALL BE UNDER ANOTHER SECTION OF THE SPECIFICATIONS.
27. ALL EXISTING PIPING DAMAGED DURING EXCAVATION SHALL BE REPAIRED WITH MATERIALS TO MATCH EXISTING BY THE CONTRACTOR AT NO COST TO THE OWNER.
28. ALL CUTTING OF EXISTING PAVING, WALKS AND/OR FLOORS SHALL BE BY MACHINE SAW CUTTING. HOLES FOR PIPES IN CONCRETE WALLS OR FLOORS SHALL BE DONE BY CORE DRILLING EQUIPMENT.
29. ALL PIPING, EXCEPT PIPING OF NONFERROUS MATERIAL, INSTALLED WITHIN THE GROUND SHALL BE PROTECTED AGAINST CORROSION BY A PROTECTIVE COVERING SUITABLE FOR THE PURPOSE AND SUBJECT TO THE APPROVAL OF THE BUILDING OFFICIAL. ANY PIPING SUBJECT TO UNDUE CORROSIVE ACTION SHALL BE PROTECTED IN A MATTER SUITABLE FOR THE PURPOSE AND SUBJECT TO THE APPROVAL OF THE BUILDING OFFICIAL.
30. ALL PENETRATIONS AND OPENINGS IN PARTY WALLS AND ROOF/FLOOR/CEILING ASSEMBLIES DUE TO PLUMBING WORK SHALL BE SEALED LINED, INSULATED OR OTHERWISE TREATED TO MAINTAIN THE REQUIRED FIRE AND SOUND RATING.

## PLUMBING LEGEND

| SYMBOL | ABBREVIATION | DESCRIPTION |
|---|---|---|
| ——— ——— | W | SANITARY WASTE/SEWER PIPING |
| ——SD—— | SD | STORM DRAIN PIPING |
| ——OFD—— | OFD | OVERFLOW DRAIN PIPING |
| – – – – – – | V | WASTE/SANITARY VENT PIPING |
| ——— ——— | (E)W | EXISTING SANITARY SEWER PIPING |
| – – – – – – | (E)V | EXISTING SANITARY VENT PIPING |
| ——— – ——— | CW | DOMESTIC COLD WATER PIPING |
| ——— – – ——— | HWR | DOMESTIC HOT WATER RETURN PIPING |
| ——— – ——— | (E)CW | EXISTING COLD WATER PIPING |
| ——— – – ——— | (E)HW | EXISTING HOT WATER PIPING |
| ——— – – – ——— | (E)HWR | EXISTING HOT WATER RETURN PIPING |
| ——TW—— | (E)TW | EXISTING TEMPERED WATER PIPING |
| ——G—— | G | NATURAL GAS PIPING |
| ——G—— | (E)G | EXISTING NATURAL GAS PIPING |
| ——MPG—— | (E)MPG | EXISTING MEDIUM PRESSURE NATURAL GAS PIPING |
| ——CD—— | CD | CONDENSATE DRAIN PIPING |
| ////// | | DEMO FIXTURE/PIPING |
| C | | PIPE GOING DOWN |
| O | | PIPE GOING UP |
| ꓵ | | TEE |
| Φ ◉ | FCO | FLOOR CLEANOUT/CLEANOUT TO GRADE |
| CC | | P-TRAP |
| ◐ | POC | POINT OF CONNECTION |
| ⊓ | | PIPE CAP |
| ⋈ | SOV | SHUT-OFF VALVE |
| ⋈~ | | PLUG VALVE |
| ⋈ | | GAS COCK VALVE |
| ⋈ | | PRESSURE REDUCING VALVE |
| XX-X | | EQUIPMENT OR FIXTURE |
| | CONT. | CONTINUED/CONTINUATION |
| | DFM | DISTANCE FROM METER |
| | FR. | FROM |
| | BEL. | BELOW |
| | DN. | DOWN |
| | VTR | VENT THROUGH ROOF |
| | AP | ACCESS DOOR |
| | NIC | NOT IN CONTRACT |
| | REF. | REFERENCE |
| | S.A.D. | SEE ARCHITECTURAL DRAWINGS |
| | S.M.D. | SEE MECHANICAL DRAWINGS |
| | S.C.D. | SEE CIVIL DRAWINGS |
| | S.S.D. | SEE STRUCTURAL DRAWINGS |
| | SF | SQUARE FEET |

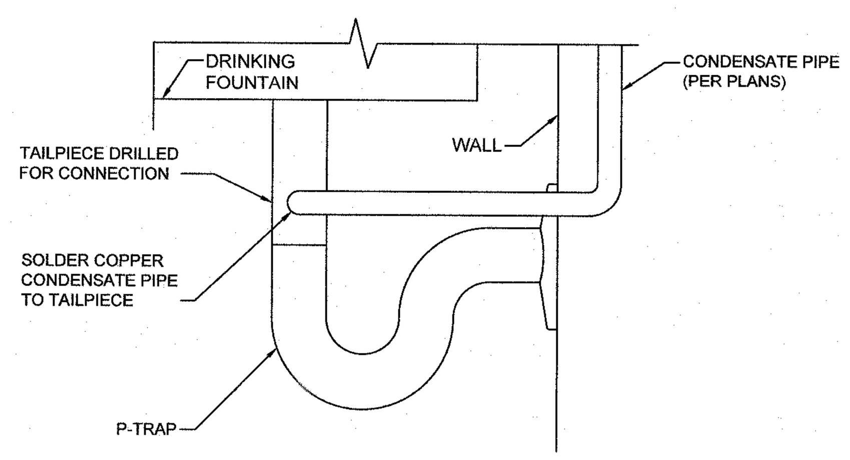


4 / P0.1 CONDENSATE TO TAILPIECE OF DRINKING FOUNTAIN
Scale: NONE

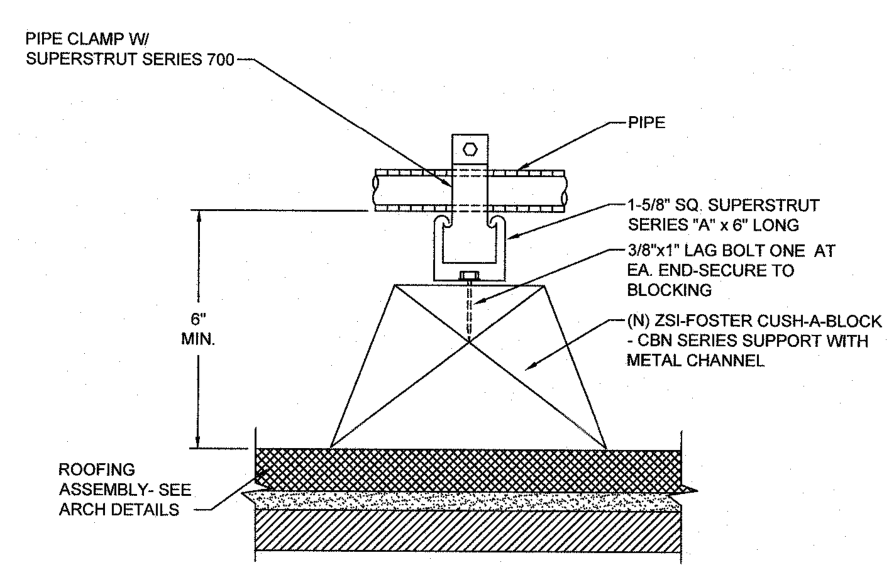


3 / P0.1 PIPE ROOF SUPPORT DETAIL
Scale: NONE

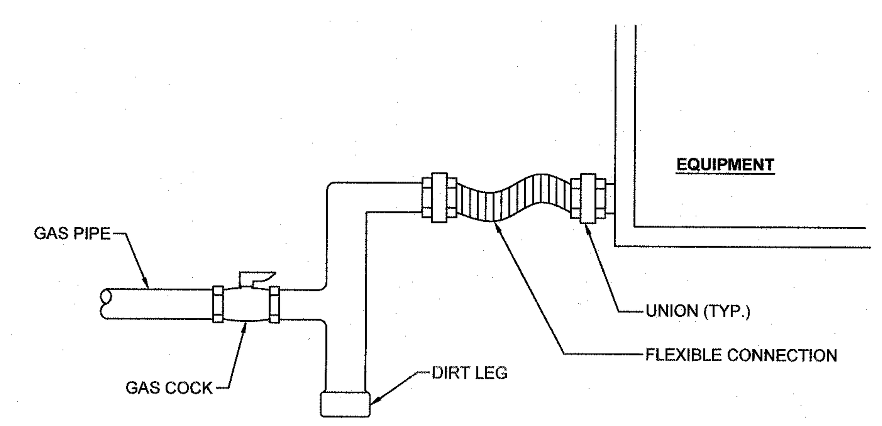


2 / P0.1 GAS CONNECTION TO EQUIPMENT
Scale: NONE

NOTES:

1. ALL CONDENSATE DRAIN LINES INSIDE BUILDING SHALL BE INSULATED IN ACCORDANCE WITH THE REQUIREMENTS OF SECTION 15400, PLUMBING SPECIFICATIONS.
2. SEE DRAWING FOR SIZES.
3. TRAP DEPTH SHALL BE EQUAL TO THE UNIT TOTAL STATIC PRESSURE PLUS 1-INCH BUT NOT LESS THAN 2-INCHES.
4. IF THE PRESSURE IN THE DRAIN PAN IS NEGATIVE, THE DISTANCE FROM THE BOTTOM OF THE AC UNIT DRAIN PAN TO THE CROWN WEIR OF THE TRAP SHALL BE GREATER THAN THE NEGATIVE PRESSURE IN THE DRAIN PAN.

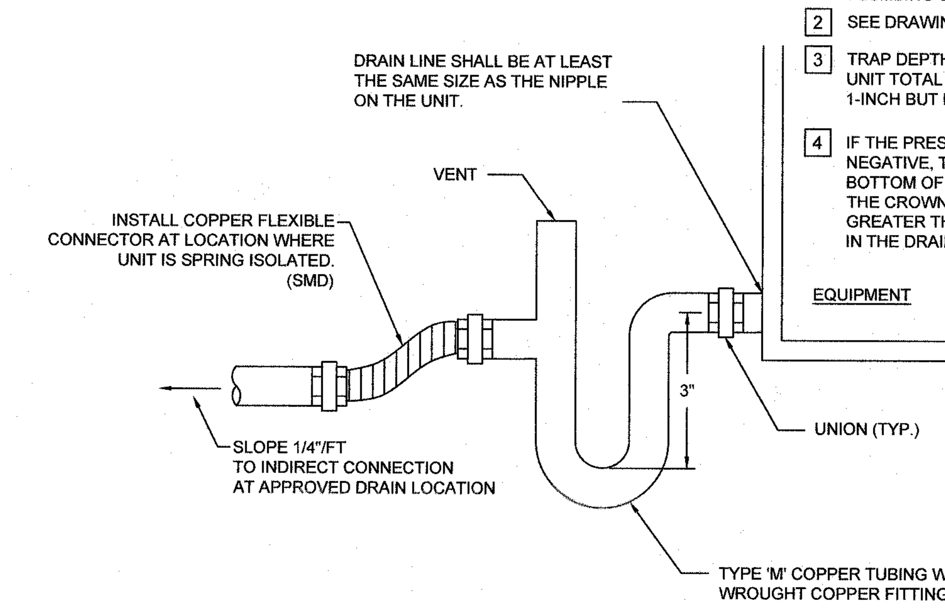


*DO NOT PROVIDE ON EQUIPMENT THAT IS INTERNALLY TRAPPED. CONTRACTOR TO COORDINATE.

1 / P0.1 CONDENSATE DRAIN CONNECTION TO EQUIPMENT
Scale: NONE

JOB COPY
These plans must be kept on the job at all times.
CITY OF MORGAN HILL
BUILDING DIVISION

WESTON MILES
ARCHITECTS
17500 Depot Street, Suite #200
Morgan Hill, CA 95037
1 • 408 • 779 • 6686
• Architecture • Landscape •

LICENSED ARCHITECT
LESLEY L. MILES
RENEWAL 9-30-19
STATE OF CALIFORNIA
NOT VALID WITHOUT SIGNATURE

HM
MECHANICAL GROUP
8517 Earhart Rd, Suite 230
Oakland, CA 94621
510-569-2000

CONSULTANT JOB NO: 17120

REGISTERED PROFESSIONAL ENGINEER
GARY L. HEMMINGS
No. M20245
4/2/2019
MECHANICAL
STATE OF CALIFORNIA

REVISIONS
1

# PLUMBING: NOTES & LEGEND

## CENTENNIAL RECREATION CENTER EXPANSION PROJECT

CITY OF MORGAN HILL
171 W EDMUNDSON AVE, MORGAN HILL, CA 95037

These drawings are instruments of service and are the property of WESTON MILES ARCHITECTS, INC. All designs and other information on the drawings are for use on the specified project and shall not be used otherwise without the expressed written permission of WESTON MILES ARCHITECTS, INC.

Written dimensions on these drawings shall have precedence over scaled dimensions. Contractors shall verify and be responsible for all dimensions and conditions on the job and this office shall be notified of any variations from the dimensions and conditions shown by these drawings. Shop details shall be submitted to this office for approval before proceeding with fabrication.

© Copyrighted 2018

DATE: 02/01/2019
JOB NO: 18001

P0.1

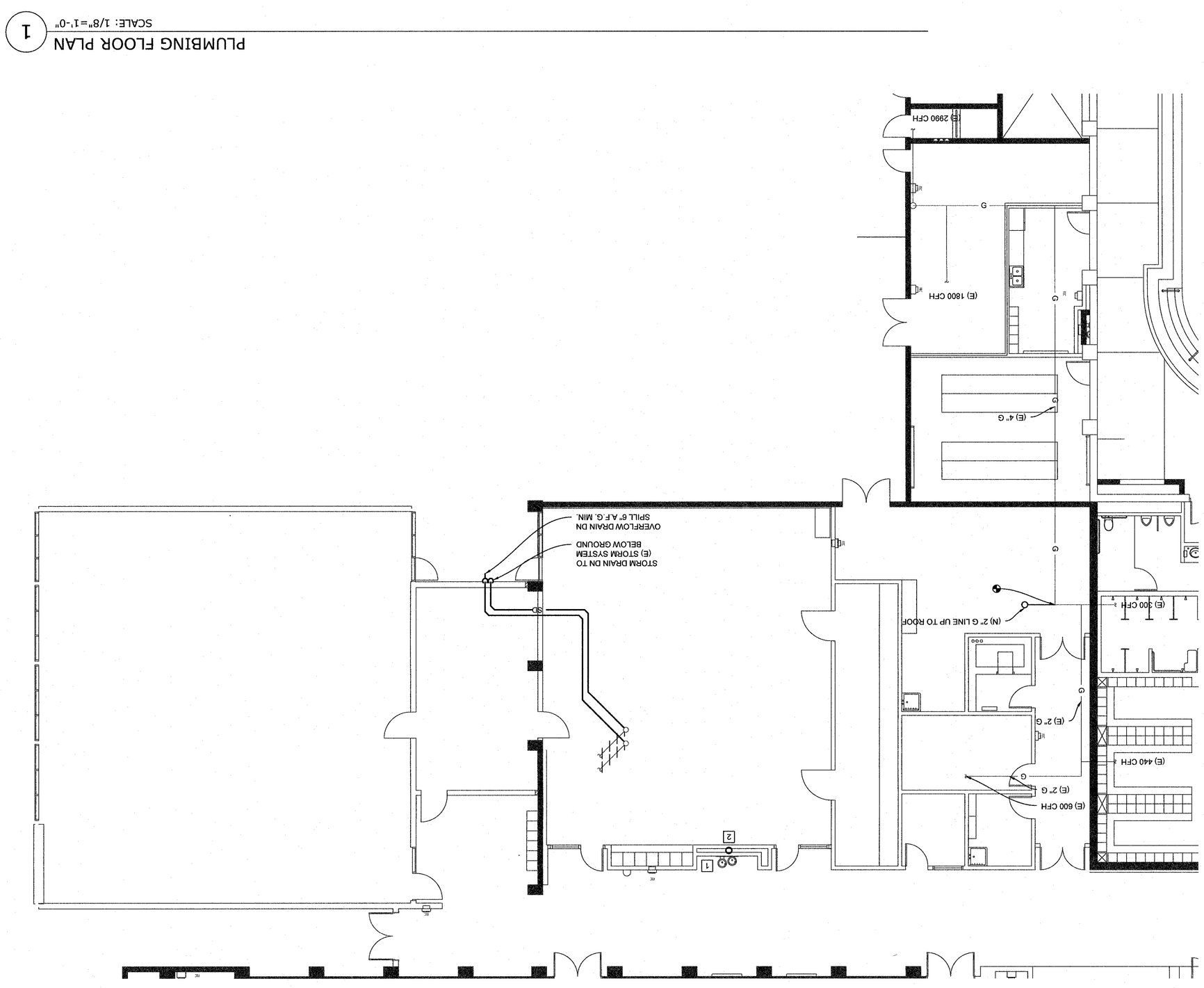


## NEW SCOPE KEYNOTES

1 INSTALL (N) BOTTLE FILLER BF-1 IN LOCATION SPECIFIED ON ARCHITECT DRAWINGS. RECONNECT TO (E) 1/2" CW LINE AND (E) SS LINE SUPPLYING DRINKING FOUNTAIN.

2 (N) CONDENSATE DRAIN LINE DOWN TO TAILPIECE OF DRINKING FOUNTAIN (SEE DETAIL 4/P0.1).

CONTRACTOR TO FIELD VERIFY EXACT SIZE, LOCATION, AND INVERT ELEVATION OF (E) PIPES PRIOR TO INSTALLATION OF ANY NEW PIPE. IF THE (E) PIPE SIZE IS SMALLER THAN THE (N) PIPE SIZE, ANDOR THE INVERT ELEVATION OF THE (E) PIPE IS NOT DEEP ENOUGH, THE CONTRACTOR IS TO NOTIFY ARCHITECT IMMEDIATELY AND NO NEW PIPE IS TO BE INSTALLED UNTIL THE ISSUE IS RESOLVED.

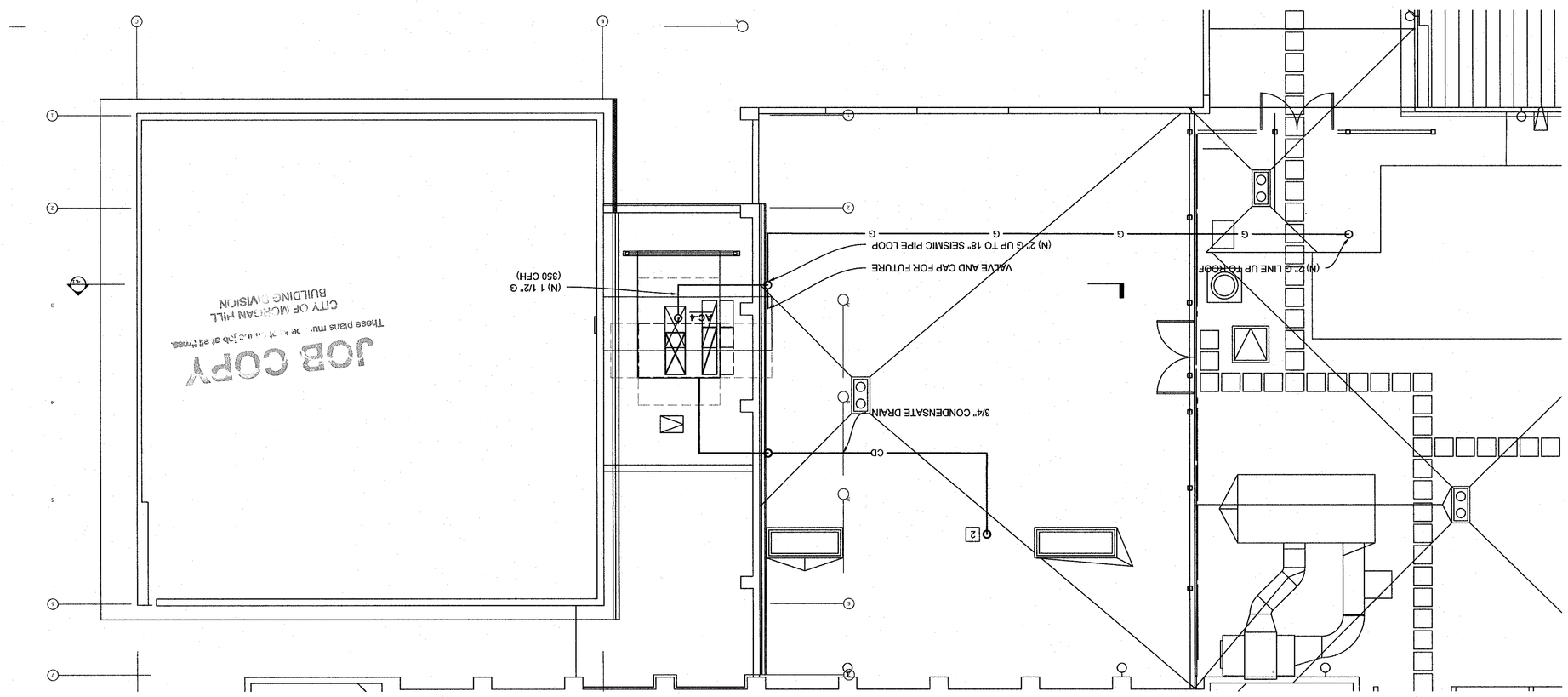


PLUMBING FLOOR PLAN 1 SCALE: 1/8"=1'-0"

TRUE NORTH



PLUMBING ROOF PLAN 1 SCALE: 1/8"=1'-0"

TRUE NORTH

WESTON MILES
ARCHITECTS
17500 Depot Street, Suite #200
Morgan Hill, CA 95037
t • 408 • 779 • 6686
• Architecture • Landscape •

NOT VALID WITHOUT SIGNATURE

HM MECHANICAL GROUP
8517 Edwards Rd. Suite 230
Oakland, CA 94621
510-569-2000

CONSULTANT JOB NO: 17120

REVISIONS
1

PLUMBING: PLANS

CENTENNIAL RECREATION CENTER EXPANSION PROJECT

CITY OF MORGAN HILL
171 W. EDMUNDSON AVE, MORGAN HILL, CA 95037

These drawings are instruments of service and are the property of WESTON MILES ARCHITECTS, INC. As despite and other deposition on the drawings are not to be reproduced, altered, presented or distributed without the written permission of WESTON MILES ARCHITECTS, INC.

These drawings and specifications contain proprietary and confidential information. Construction shall notify and be responsible for the detailed of any conflicting dimensions and conditions shown by these drawings. Drawings shall be submitted at the office prior to construction.

© Copyright 2018

DATE: 02/01/2019

JOB NO: 18001

P2.0

# GENERAL CONSTRUCTION NOTES

1. CONTRACTOR SHALL COMPLY WITH ALL APPLICABLE CODES AND REGULATIONS. MATERIALS AND EQUIPMENT SHALL BE U.L. LISTED AND LABELED FOR THE APPLICATION.
2. THE CONTRACTOR SHALL OBTAIN AND PAY FOR ALL PERMITS, LICENSES AND INSPECTION FEES REQUIRED BY THIS CONTRACT WORK.
3. CONTRACTOR SHALL VISIT THE PROJECT SITE PRIOR TO BIDDING AND ALLOW FOR ALL FIELD CONDITIONS. THE CONTRACTOR SHALL BE RESPONSIBLE FOR ALL ELECTRICAL WORK NOTED AND CALLED OUT ON ALL CONTRACT DOCUMENTS. THE CONTRACTOR SHALL OBTAIN INFORMATION AND BE FAMILIAR WITH ALL OTHER TRADES WORK. THE CONTRACTOR SHALL BE RESPONSIBLE FOR COORDINATION BETWEEN OTHER TRADES ON PROJECT.
4. CONTRACTOR SHALL BE RESPONSIBLE FOR THE SAFETY OF PERSONS AND PROPERTY AND SHALL PROVIDE INSURANCE COVERAGE AS NECESSARY FOR LIABILITY AND PERSONAL, PROPERTY DAMAGE, TO FULLY PROTECT THE OWNER, ARCHITECT AND ENGINEER FROM ANY AND ALL CLAIMS RESULTING FROM THIS WORK.
5. CONTRACTOR SHALL MAINTAIN RECORD DRAWINGS AT THE PROJECT SITE INDICATING ALL MODIFICATIONS TO ELECTRICAL SYSTEMS. THE CONTRACTOR SHALL AT THE CONCLUSION OF THE PROJECT PROVIDE ACCURATE "AS-BUILT" DRAWINGS ACCEPTABLE TO THE ARCHITECT.
6. ALL MATERIALS PROVIDED TO THE PROJECT SHALL BE NEW. THE CONTRACTOR SHALL BE RESPONSIBLE TO PROVIDE AND INSTALL ALL INCIDENTAL MATERIALS REQUIRED FOR A COMPLETE INSTALLATION.
7. CONTRACTOR SHALL PROVIDE TO THE ARCHITECT A CONSTRUCTION SCHEDULE OF ELECTRICAL WORK. THE CONSTRUCTION SCHEDULE SHALL IDENTIFY ALL SIGNIFICANT MILESTONES WITH COMPLETION DATES.
8. CONTRACTOR SHALL PROVIDE ALL REQUIRED "CUTTING, PATCHING, EXCAVATION, BACKFILL AND REPAIRS" NECESSARY TO RESTORE DAMAGED SURFACES TO EQUAL OR BETTER THAN ORIGINAL CONDITIONS EXISTING AT START OF WORK.
9. CONTRACTOR SHALL BE RESPONSIBLE FOR PAINTING ALL EXPOSED CONDUITS AND ELECTRICAL EQUIPMENT. REFER TO ARCHITECTS PAINTING SECTION FOR REQUIREMENTS.
10. ALL ELECTRICAL EQUIPMENT INSTALLED OUTDOORS SHALL BE WEATHERPROOF. EXTERIOR CONDUITS RUN INTO BUILDINGS SHALL BE INSTALLED WITH FLASHING, CAULKED AND SEALED. CONDUITS FOR EXTERIOR ELECTRICAL DEVICES SHALL BE RUN INSIDE BUILDING UNLESS OTHERWISE NOTED ON DRAWINGS.
11. ALL CONDUITS UNLESS OTHERWISE NOTED ON DRAWINGS SHALL HAVE AS A MINIMUM: TWO (2) #12s WITH ONE (1) #12 GROUND. "TICK" MARKS SHOWN ON CIRCUITRY ARE FOR ROUGH ESTIMATING ONLY. THE CONTRACTOR SHALL BE RESPONSIBLE FOR ALL WIRES AND WIRE SIZES REQUIRED BY LATEST CODE.
12. ALL BRANCH CIRCUITS SHALL HAVE INDIVIDUAL NEUTRALS. SHARED NEUTRALS ON MULTIWIRE CIRCUITS IS NOT ALLOWED.
13. ALL 120/277V LIGHT SWITCHES AND WALL OCCUPANT SENSORS SHALL HAVE A NEUTRAL INSTALLED TO THE DEVICE BOX EXCEPT WHERE A CONDUIT OR SURFACE RACEWAY SYSTEM IS INSTALLED.
14. COORDINATE ALL CONDUIT RUNS, ELECTRICAL EQUIPMENT AND PANELS WITH ALL OTHER WORK TO AVOID CONFLICTS.
15. SEE ARCHITECTURAL DOCUMENTS FOR EXACT PLACEMENT OF LIGHTING FIXTURES AND DEVICES. THE ELECTRICAL CONTRACTOR SHALL BE RESPONSIBLE FOR VERIFICATION OF CEILING TYPES FROM ARCHITECTURAL DOCUMENTS AND PROVIDE AND INSTALL ALL REQUIRED FIXTURE MOUNTING HARDWARE. PROVIDE AND INSTALL U.L. LISTED FIRE STOP ENCLOSURES FOR ALL RECESSED FIXTURES IN FIRE RATED CEILINGS.
16. CONTRACTOR SHALL, PRIOR TO BID, FIELD VERIFY ALL REQUIREMENTS FOR MODIFYING THE DATA AND INTERCOM SYSTEMS TO ACCOMMODATE ADDITIONS NOTED. THE CONTRACTOR SHALL PROVIDE ALL MATERIALS NEEDED TO MAKE A FULLY OPERATIONAL SYSTEM AT THE CONCLUSION OF PROJECT WORK.
17. CONTRACTOR SHALL PROVIDE IN EVERY NEW EMPTY CONDUIT A DRAW STRING FOR USE IN FUTURE CONSTRUCTION.
18. ALL CONDUIT SHALL BE CONCEALED WHERE POSSIBLE. CUT AND PATCH EXISTING WALLS WHERE NECESSARY. WHERE IT IS NECESSARY TO CUT OR BORE EXISTING STRUCTURAL WALLS FOR NEW ELECTRICAL WORK OBTAIN PERMISSION FROM THE ARCHITECT PRIOR TO STARTING WORK. REUSE (E) CONDUIT WHERE POSSIBLE.
19. WHERE IT IS NOT POSSIBLE TO REUSE (E) CONDUIT OR RUN (N) CONCEALED CONDUIT USE NON-METALLIC SURFACE RACEWAY AND BOXES. ROUTING OF ALL NON-METALLIC RACEWAYS SHALL BE APPROVED BY THE ARCHITECT OR OWNER'S REPRESENTATIVE PRIOR TO ROUGH-IN.
20. EXTENSION RINGS OR RESET BOXES TO BE FLUSH WITH NEW WALL THICKNESS.
21. CONTRACTOR SHALL BE RESPONSIBLE FOR ALL DAMAGE TO (E) UNDERGROUND SYSTEMS (GAS, WATER, TELEPHONE, ELECTRICAL, SEWER, ETC.). THE CONTRACTOR SHALL REPAIR & PAY ALL EXPENSES FOR DAMAGE TO (E) UNDERGROUND SYSTEMS AS A RESULT OF (N) WORK. REPAIR TO DAMAGED UNDERGROUND SYSTEMS SHALL BE TO THE OWNERS SATISFACTION WITHOUT EXTRA EXPENSE TO THE OWNER.
22. EXISTING WIRING SHOWN HAS BEEN TAKEN FROM OLD PLANS AND IS ASSUMED TO BE CORRECT. ELECTRICAL CONTRACTOR SHALL FIELD VERIFY ACTUAL CONDITIONS AND MAKE ADJUSTMENTS TO SUIT ACTUAL CONDITIONS AND TO MEET THE INTENT OF THE CONTRACT DOCUMENTS.
23. WHERE NON-METALLIC SHEATHED CONDUCTORS ARE FOUND, THE CONTRACTOR SHALL REMOVE TO FULLEST EXTENT PER THE GENERAL DEMOLITION NOTES AND REPLACE WITH CONDUIT. METAL CLAD CABLE WILL BE PERMITTED ON A CASE-BY-CASE BASIS ONLY BY WRITTEN APPROVAL FROM THE ARCHITECT.
24. ALL INSTALLATION OF EXPOSED SURFACE MOUNTED RACEWAY IN PUBLIC AREAS SHALL BE REVIEWED BY ELECTRICAL ENGINEER BEFORE ROUGH-IN. CONTRACTOR IS TO DETERMINE THE ACCESSIBILITY OF ATTIC, FURRED SPACE, HOLLOW MULLIONS, ETC. IN EACH AREA AND REVIEW WITH ENGINEER. IF SYSTEM CAN BE ROUTED CONCEALED EITHER BY FISHING OR ACCESSIBILITY, CONTRACTOR IS TO DO SO. IF INACCESSIBILITY IS DETERMINED, CONTRACTOR SHALL INSTALL SURFACE MOUNTED RACEWAY IN THE MOST AESTHETICALLY PLEASING MEANS AS DETERMINED BY THE THE ENGINEER. NO ALLOWANCE FOR ADDITIONAL COMPENSATION DUE TO ROUTING AS DIRECTED BY THE ENGINEER WILL BE MADE.

# ELECTRICAL SYMBOLS & ABBREVIATIONS

SYMBOLS & ABBREVIATIONS SHOWN ARE FOR GENERAL USE. DISREGARD THOSE WHICH DO NOT APPEAR ON THE PLANS.

- FLUORESCENT OR LED LUMINAIRE - SEE SCHEDULE
- EMERGENCY OR NIGHT LIGHT
- STRIP FLUORESCENT OR LED LUMINAIRE - SEE SCHEDULE
- LUMINAIRE - RECESSED - SEE SCHEDULE
- RECESSED WALL WASHER
- LUMINAIRE - SURFACE MOUNTED - SEE SCHEDULE
- LUMINAIRE - POLE OR POST MOUNTED - SEE SCHEDULE
- LUMINAIRE - WALL MOUNTED SEE SCHEDULE
- BOLLARD OR PATH LIGHT - SEE SCHEDULE
- EXIT LIGHT - DIRECTIONAL ARROWS AS INDICATED - SEE SCHEDULE
- TRACK LIGHTING - SEE SCHEDULE
- EMERGENCY LIGHT
- DIGITAL DUAL TECHNOLOGY OCC. SENSOR
- LIGHTING CONTROL OCCUPANCY SENSOR CORNER MOUNTED
- DRC DIMMER ROOM CONTROLLER
- PC PLUG LOAD CONTROLLER
- RC ROOM LIGHTING CONTROLLER
- LCP LIGHTING CONTROL PANEL
- DL DIGITAL DAYLIGHT SENSOR
- SINGLE POLE SWITCH ✱✱
- SINGLE POLE SWITCH, ✱✱ a = CIRCUIT CONTROLLED
- THREE WAY SWITCH✱✱
- FOUR WAY SWITCH✱✱
- MANUAL MOTOR STARTER
- KEY OPERATED SWITCH✱✱
- LIGHTING DIMMER✱✱
- DIGITAL ON/OFF SWITCH ✱✱
- DIGITAL DIMMER SWITCH ✱✱
- DIGITAL MULTI SCENE LIGHTING SWITCH ✱✱
- DIGITAL DUAL TECHNOLOGY WALL OCC. SENSOR✱✱
- WALL OCCUPANCY SENSOR ✱✱
- DOUBLE SWITCHED WALL OCCUPANCY SENSOR ✱✱
- DIMMING DUAL TECHNOLOGY WALL SWITCH OCCUPANCY SENSOR ✱✱
- 2-BUTTON DIMMING DUAL TECHNOLOGY WALL SWITCH OCCUPANCY SENSOR ✱✱
- SECURITY DOOR CONTACTS
- SECURITY MOTION DETECTOR
- SC CCTV CAMERA
- KP SECURITY SYSTEM KEYPAD
- DOOR BELL PUSHBUTTON
- DOOR CHIME WITH LED
- RECEPTACLE - DUPLEX✱
- DUPLEX RECEPTACLE MOUNTED ABOVE COUNTER - FIELD VERIFY HEIGHT
- GFCI CONVENIENCE RECEPTACLE - DUPLEX✱
- GFCI CONVENIENCE DUPLEX RECEPTACLE MOUNTED ABOVE COUNTER - FIELD VERIFY HEIGHT
- RECEPTACLE DOUBLE DUPLEX✱
- HALF SWITCHED DUPLEX RECEPTACLE ✱
- SINGLE RECEPTACLE✱
- DUPLEX RECEPTACLE - CEILING MOUNTED
- HC LETTER INDICATES DUPLEX HALF CONTROLLED RECEPTACLE ✱
- C LETTER INDICATES DUPLEX FULLY CONTROLLED RECEPTACLE ✱
- FLOOR MOUNTED DUPLEX RECEPTACLE
- FLOOR MOUNTED BOX
- POWER OUTLET - SEE PLANS FOR NEMA TYPE✱
- POWER POLE
- WALL TELEPHONE OUTLET✱✱
- [#] VOICE/DATA WALL OUTLET✱
- [#] VOICE/DATA OUTLET MOUNTED ABOVE COUNTER - FIELD VERIFY HEIGHT
- [#] SURFACE MOUNTED VOICE/DATA WALL OUTLET✱
- [#] SURFACE MOUNTED VOICE/DATA OUTLET MOUNTED ABOVE COUNTER - FIELD VERIFY HEIGHT
- WIRELESS ACCESS POINT (WAP) - CEILING MOUNTED
- WIRELESS ACCESS POINT (WAP) - WALL MOUNTED - FIELD VERIFY HEIGHT
- [#] VOICE/DATA OUTLET - FLOOR MOUNTED
- TV OUTLET✱
- [#] VOICE/DATA OUTLET - CEILING MOUNTED
- INTERIOR SPEAKERS CEILING MOUNTED
- INTERIOR SPEAKERS WALL MOUNTED
- CLOCK +8'-0" AFF U.O.N. VERIFY BEFORE INSTALLATION
- PANELBOARD - FLUSH MOUNTED
- EQUIPMENT PANEL - FLUSH MOUNTED
- PANELBOARD - SURFACE MOUNTED
- EQUIPMENT PANEL - SURFACE MOUNTED
- METER W/ CURRENT TRANSFORMER
- JUNCTION BOX - CEILING OR WALL MOUNTED, SIZE PER CODE, TAPE AND TAG WIRES
- MOTOR CONNECTION
- NON-FUSED DISCONNECT SWITCH
- FUSED DISCONNECT SWITCH; FUSED WITH DUAL-ELEMENT FUSES SIZED PER EQUIPMENT MFGR'S NAMEPLATE DATA
- COMBINATION STARTER/FUSED DISCONNECT SWITCH; FUSED DISCONNECT SWITCH ELEMENT FUSES SIZED PER EQUIPMENT MFGRS NAMEPLATE DATA
- MAGNETIC STARTER - NEMA SIZE INDICATED NEMA 3R ENCLOSURE UNLESS OTHERWISE SPECIFIED
- CIRCUIT BREAKER
- GROUND ROD WITH GROUNDWELL BOX
- GROUND ELECTRODE
- NORMALLY OPEN CONTACT
- NORMALLY CLOSED CONTACT
- TRANSFORMER - SEE SINGLE LINE FOR SIZE
- PULLBOX
- FLEX CONDUIT WITH CONNECTION
- CONDUIT - UP
- CONDUIT - DOWN
- —E— CONDUIT EMERGENCY SYSTEM
- —LV— LOW VOLTAGE WIRING
- SURFACE METAL OR NON-METALLIC RACEWAY
- CONDUIT - CONCEALED IN WALLS OR CEILING
- CONDUIT - EXISTING
- CONDUIT - BELOW SLAB OR UNDERGROUND: 3/4"MIN.
- CAPPED OR STUB-OUT CONDUIT
- CONDUIT CONTINUATION
- #10 CONDUIT - HOME RUN TO PANEL, TERMINAL CABINET, ETC. RUNS MARKED WITH CROSSHATCHES INDICATE NUMBER OF #12 AWG WIRES WHEN MORE THAN TWO. SIZE CONDUIT ACCORDING TO SPECIFICATIONS AND APPLICABLE CODE. CROSS HATCHES WITH NUMBER ADJACENT INDICATES WIRE SIZE OTHER THAN #12 AWG.
- (2) SHEET NOTE REFERENCE SYMBOL; SEE ASSOCIATED NOTE ON SAME SHEET
- (3) SCHEDULE SYMBOL; SEE ASSOCIATED NOTE ON SAME SHEET
- (2) DETAIL NOTE REFERENCE SYMBOL SEE ASSOCIATED NOTE ON SAME DETAIL
- F301 FEEDER DESIGNATION; SEE ASSOCIATED NOTE ON SAME DETAIL
- 1 / E3.0 DETAIL NUMBER; DETAIL OR SECTION REFERENCE; SHEET NUMBER
- 1 INDICATES QUANTITY OF TELEPHONE OUTLETS
- 2 INDICATES QUANTITY OF DATA OUTLETS

## ABBREVIATIONS

| | | | | | |
|---|---|---|---|---|---|
| A | AMPERE | GFCI | GROUND FAULT | NTS | NOT TO SCALE |
| AFF | ABOVE FINISHED FLOOR | GFI | INTERRUPTING | OAH | OVERALL HEIGHT |
| ALUM/AL | ALUMINUM | GND, G | GROUND | OC | ON CENTER |
| ARCH | ARCHITECT | GRS | GALVANIZED RIGID | OH | OVERHEAD |
| AWG | AMERICAN WIRE |  | STEEL | PA | PUBLIC ADDRESS |
|  | GAUGE | HT | HEIGHT | PB | PULL BOX |
| BKR | BREAKER | IC | INTERCOM | PF | POWER FACTOR |
| C | CONDUIT | IDF | INTERMEDIATE | PH | PHASE |
| CATV | CABLE TV |  | DISTRIBUTION FRAME | PIR | PASSIVE INFRARED |
| CB | CIRCUIT BREAKER | INCAND | INCANDESCENT | PNL | PANEL |
| CCTV | CLOSED CIRCUIT TV | JB | JUNCTION BOX | PV | PHOTOVOLTAIC |
| CKT | CIRCUIT | KV | KILOVOLT | PVC | POLYVINYL |
| CL | CENTER LINE | KVA | KILOVOLT AMPERES |  | CHLORIDE |
| CLG | CEILING | KW | KILOWATT | PWR | POWER |
| C.O. | CONDUIT ONLY | LCP | LIGHTING CONTROL | (R) | EXISTING TO BE REMOVED |
| CTR | CENTER |  | PANEL | (RP) | REMOVABLE POLE |
| D | DIMMER | LTG | LIGHTING | RECPT'S | RECEPTACLES |
| DIM | DIMENSION | LV | LOW VOLTAGE | REQD | REQUIRED |
| DIST | DISTRIBUTION | KCM | THOUSAND | REQMT'S | REQUIREMENT(S) |
| (E) | EXISTING |  | CIRCULAR MILS | SHT | SHEET |
| EC | ELECTRICAL CONTRACTOR | M.B. | MAIN CIRCUIT BREAKER | SLD | SINGLE LINE DIAGRAM |
| (EL) | EVENING LIGHT | MCA | MINIMUM | STC | SYSTEMS TERMINATION |
| EM | EMERGENCY |  | CIRCUIT AMPS |  | CABINET |
| EMT | ELECTRICAL | MDF | MAIN DISTRIBUTION FRAME | SW | SWITCH |
|  | METALLIC TUBING | MECH | MECHANICAL | SWBD | SWITCHBOARD |
| EQUIP | EQUIPMENT | MH | METAL HALIDE | TTB | TELEPHONE TERMINAL |
| EV | ELECTRICAL VEHICLE | MLO | MAIN LUGS ONLY |  | BACKBOARD |
| FA | FIRE ALARM | MPOE | MAIN POINT OF ENTRANCE | TYP | TYPICAL |
| FACP | FIRE ALARM | MTD | MOUNTED | UON | UNLESS OTHERWISE NOTED |
|  | CONTROL PANEL | MTG | MOUNTING | UG | UNDERGROUND |
| FC | FOOT CANDLE | MOCP | MAXIMUM OVER | V | VOLT |
| FIN | FINISH |  | CURRENT PROTECTION | VD | VOLTAGE DROP |
| FL | FLOOR | (N) | NEW | W | WATT |
| FLA | FULL LOAD AMPS | NIC | NOT IN CONTRACT | W/ | WITH |
| FLUOR | FLUORESCENT | NIEC | NOT IN ELECTRICAL | WP | WEATHERPROOF |
| (F) | FUTURE |  | CONTRACT | XFMR | TRANSFORMER |
| GC | GENERAL CONTRACTOR | (NL) | NIGHT LIGHT |  |  |
|  |  | NO. | NUMBER |  |  |
|  |  | NOM | NOMINAL |  |  |

## FIRE ALARM

NOTE: SEE FIRE ALARM DRAWINGS FOR QUANTITIES AND MOUNTING HEIGHTS.

- MANUAL PULL STATION
- STROBE ONLY
- HORN ONLY
- MINI HORN
- HORN/STROBE
- CHIME/STROBE
- HEAT DETECTOR
- SMOKE DETECTOR
- DUCT SMOKE DETECTOR
- TAMPER SWITCH
- FLOW SWITCH
- POST INDICATING VALVE
- FIRE SMOKE DAMPER
- BELL (GONG)
- FCP FIRE ALARM CONTROL PANEL
- APS AUXILIARY POWER SUPPLY
- FSA FIRE SYSTEM ANNUNCIATOR
- FTR FIRE ALARM TRANSPONDER OR TRANSMITTER
- ESR ELEVATOR STATUS/RECALL
- FAC FIRE ALARM COMMUNICATOR
- ANN REMOTE ANNUNCIATORS
- EOL END OF LINE

✱ +15" A.F.F. TO BOTTOM OF BOX, U.O.N.
✱✱ +48" A.F.F. TO TOP OF BOX, U.O.N.
[#] NUMBER IN BRACKETS DENOTES NUMBER OF CABLE DROPS WHEN MORE THAN (2).

# LIGHT FIXTURE SCHEDULE

FIXTURE NOTES:

1. ALL FLUORESCENT/LED LIGHT FIXTURE BALLASTS/DRIVERS SHALL BE ELECTRONIC TYPE, 10% TOTAL HARMONIC DISTORTION MAXIMUM.
2. ALL FLUORESCENT LIGHT FIXTURE LAMPS AND LED LIGHT MODULES SHALL BE ENERGY SAVING 3500° K, 80 CRI MINIMUM, U.O.N. (SEE SPECIFICATIONS FOR MORE INFORMATION).
3. ALL FLUORESCENT BALLASTS AND LED DRIVERS (AND ASSOC. FIXTS.) SHALL HAVE MANUFACTURER'S CERTIFICATION OF COMPLIANCE WITH CALIFORNIA ENERGY COMMISSION STANDARDS AND REQUIREMENTS, WHERE SUCH ARE USED IN CONDITIONED SPACES.
4. EXIT SIGNS , EMERGENCY LIGHTS AND LIGHT FIXTURES WITH EMERGENCY BATTERY BACK-UP SHALL SUPPLY A MINIMUM DURATION OF 90 MINUTES OF POWER IN THE EVENT OF A POWER OUTAGE/FAILURE.

| TYPE | DESCRIPTION | LAMPS | MANUFACTURER |
|---|---|---|---|
| A | 6" DIA. LED RECESSED WALL WASH LIGHT FIXTURE, DIE-CAST ALUMINUM HOUSING, XTM19, NEW CONSTRUCTION, 0-10V DIMMING DRIVER, 277V. | 16W LED 98CRI 975 LUMENS | ALPHABET LIGHTING NUGRW PRIME |
| C | 9.5" DIA. x 15"H COMPACT FLUORESCENT PENDANT WITH CYLINDER SHAPED GLASS, CLAD ALUMINUM DOWNLIGHT REFLECTOR, WHITE FINISH WITH WHITE POWER CORD, AIR-CRAFT CABLE SUSPENSION, INTEGRAL CANOPY BALLAST ENCLOSURE, ADVANE MAK VII, 0-10V DIMMING BALLAST, 277V. | 32W CFL | DEL RAY LIGHTING G212D |
| CE | SAME AS FIXTURE TYPE "C" EXCEPT WITH AND ADDITIONAL INTEGRAL EMERGENCY BATTERY PACK. | 32W CFL | DEL RAY LIGHTING G212EM |
| D | 48"L x 3" DEEP LED CHAIN SUSPENDE LIGHT FIXTURE, 22-GUAGE DIE-FORMED HOUSING, REFLECTIVE WHITE POLYESTER POWER COAT, SQUARE LENS, (2) Y-HANGERS AND (2) 2' CHAINS, 0-10V DIMMING DRIVER, 277V. | 33W LED 3800 LUMENS | H.E. WILLIAMS 75S SERIES |
| E | LED EXIT LIGHT, CAST ALUMINUM HOUSING, CHEVRON ARROWS WITH TEMPLATE ENABLE ON-SITE CONFIGURATION, BRUSHED ALUMINUM FINISH, STANDARD 6" HIGH GREEN LETERING, SEE PLANS FOR NUMBER OF FACES, ARROWS AND MOUNTING REQUIRED, BATTERY BACK-UP EMERGENCY, SELF-TEST/SELF DIAGNOSTIC, UNIVERSAL VOLTAGE. | INCLUDED | EVERLITE SOVEREIGN |
| F | 13.3"W x 10.3"H x 3.8" DEEP LED WALL MOUNTED UP/DOWNLIGHT FIXTURE, TRIANGLE/WEDGE, 50/50 DOWN/UP, TYPE IV (DOWN & UP), FINISH PER ARCHITECT, 0-10V DIMMING DRIVER, 277V. | 25W LED 2325 LUMENS 4000°K | ARCHITECTURAL AREA LIGHTING CYPHER CY1 SERIES ACCENT SACEL |
| G | 16" DIA. LED ROUND HIGH-BAY SUSPENDED LIGHT FIXTURE, DIE-CAST ALUMINUM HOUSING, HOOK WITH 12' CORD AND 277V PLUG, CLEAR STANDARD ACRYLIC REFLECTOR, CLERICAL ACRYLIC LENS AND SPRING CLAMP BAND, FINISH PER ARCHITECT, 0-10V DIMMING DRIVER, UNIVERSAL VOLTAGE. | 87W LED 11594 LUMENS 4000°K | PHILIPS DAY-BRITE RBX SERIES |
| GE | SAME AS FIXTURE TYPE "G" EXCEPT WITH AN ADDITIONAL EMERGENCY BATTERY. | 87W LED 11594 LUMENS 4000°K | PHILIPS DAY-BRITE RBX SERIES |
| XA | 6.5"W x 9.5"H x 11.5" DEEP LED OUTDOOR WALL MOUNTED UP/DOWN LIGHT FIXTURE, HIGH GRADE ALUMINUM CONSTRUCTION, PRISMATIC GLOBE DIFFUSER, TEMPERED GLASS, FINISH PER ARCHITECT, ELECTRONIC DRIVER, 277V. | 15W LED 4000°K | TMS LIGHTING U101 UP-DOWN |
| XBE | 13.1"W x 6.6"H x 8.5" DEEP LED TRAPEZOID WALL MOUNTED LIGHT FIXTURE, DIE-CAST ALUMINUM HOUSING, FULL CUT OFF, DARK SKY COMPLIANT, NORMAL AND EMERGENCY MODE WITH BATTERY, BACK BOX COLOR AND FIXTURE FINISH PER ARCHITECT, ELECTRONIC DRIVER, 277V | LED 28W 2850LM 4000°K | DUAL-LITE GeoPak SERIES |
| XC | 13"W x 6 3/8"H SINGLE HEAD LIGHT POLE FIXTURE, DIE-CAST ALUMINUM HOUSING, TEMPERED GLASS LENS, REFRACTIVE ACRYLIC OPTICS, SR4 DISTRIBUTION, 700mA, MOTION DIMMING SENSOR, SQUARE POLE MOUNTING, FINISH PER ARCHITECT, ELECTRONIC DRIVER,277V. POLE: 15'H x 5" DIA. FINISH PER ARCHITECT, SQUARE NON-TAPERED STEEL POLES | LED 97W 8476LM 4000°K | LITHONIA LIGHTING AERIS AS1 LED; POLE: KW INDUSTRIES SSP; SENSOR: ACUITY CONTROLS SBOR |
| XE | 7½"W x 3¾"DEEP x 11⅞"H EXTERIOR EMERGENCY ONLY WALL MOUNTED LIGHT FIXTURE, MARINE GRADE DIE CAST ALUMINUM HOUSING, INTEGRAL NI-CAD BATTERY, HOUSING FINISH PER ARCHITECT, SELF-DIAGNOSTRUC, 277V. | LED 3W 500LM | PHILIPS CHLORIDE CM-25050 |

# APPLICABLE CODES & STANDARDS

CODES:

1. 2016 CALIFORNIA ADMINISTRATIVE CODE C.C.R., TITLE 24, PART 1.
2. 2016 CALIFORNIA BUILDING CODE (CBC) C.C.R., TITLE 24, VOL. 1 & 2 BASED ON THE 2015 INTERNATIONAL BUILDING CODE (IBC) WITH CALIFORNIA AMENDMENTS.
3. 2016 CALIFORNIA ELECTRICAL CODE (CEC) C.C.R., TITLE 24, PART 3 BASED ON THE 2014 NATIONAL ELECTRICAL CODE (NEC) WITH CALIFORNIA AMENDMENTS.
4. 2016 CALIFORNIA MECHANICAL CODE (CMC) C.C.R., TITLE 24, PART 4 BASED ON THE 2015 UNIFORM MECHANICAL CODE (UMC) WITH CALIFORNIA AMENDMENTS.
5. 2016 CALIFORNIA PLUMBING CODE (CPC) C.C.R., TITLE 24, PART 5 BASED ON THE 2015 UNIFORM PLUMBING CODE (UPC) WITH CALIFORNIA AMENDMENTS.
6. 2016 CALIFORNIA ENERGY CODE C.C.R., TITLE 24, PART 6.
7. 2016 CALIFORNIA FIRE CODE (CFC) C.C.R., TITLE 24, PART 9 BASED ON THE 2015 INTERNATIONAL FIRE CODE (IFC) WITH CALIFORNIA AMENDMENTS.
8. 2016 CALIFORNIA GREEN BUILDING STANDARDS CODE C.C.R., TITLE 24, PART 11.
9. 2016 CALIFORNIA REFERENCED STANDARDS CODE C.C.R., TITLE 24, PART 12.
10. TITLE 19 C.C.R., PUBLIC SAFETY, STATE FIRE MARSHAL REGULATIONS.
11. NATIONAL FIRE ALARM CODE (NFPA 72) 2016.
12. CITY OF MORGAN HILL ORDINANCES, CODES, AND REGULATIONS.

STANDARDS:

1. AMERICAN NATIONAL STANDARDS INSTITUTE (ANSI)
2. ELECTRONICS INDUSTRIES ASSOCIATION (EIA)
3. INSTITUTE OF ELECTRICAL AND ELECTRONIC ENGINEERS (IEEE)
4. NATIONAL ELECTRICAL MANUFACTURERS ASSOCIATION (NEMA)
5. NATIONAL ELECTRICAL TESTING ASSOCIATION (NETA)
6. UNDERWRITER LABORATORIES (UL)
7. CALIFORNIA OCCUPATIONAL SAFETY AND HEALTH ACT STANDARDS (CAL/OSHA)

# SHEET INDEX


| | |
|---|---|
| E0.1 | SYMBOLS, ABBREVIATIONS, LIGHT FIXTURE SCHEDULE, CODES, STANDARDS, NOTES & SHEET INDEX. |
| E0.2 | CALIFORNIA ENERGY COMPLIANCE TITLE 24 (BUILDING INTERIOR). |
| E0.2 | CALIFORNIA ENERGY COMPLIANCE TITLE 24 (BUILDING EXTERIOR). |
| E1.1 | ELECTRICAL SINGLE LINE DIAGRAM & PANELBOARD SCHEDULES. |
| E2.1 | ELECTRICAL SITE PLAN. |
| E2.1PH | PHOTOMETRIC SITE PLAN. |
| E3.1 | ELECTRICAL DEMOLITION SITE PLAN. |
| E3.2 | ELECTRICAL DEMOLITION PLAN. |
| E4.1 | POWER & SYSTEMS PLAN. |
| E4.2 | POWER PLAN - ROOF. |
| E5.1 | LIGHTING PLAN. |
| E6.1 | ELECTRICAL DETAILS. |
| E6.2 | ELECTRICAL DETAILS. |



JOB COPY
These plans must be kept on the job at all times.
CITY OF MORGAN HILL
BUILDING DIVISION



WESTON MILES
ARCHITECTS
17500 Depot Street, Suite #200
Morgan Hill, CA 95037
1 •408 • 779 • 6686
• Architecture • Landscape •



NOT VALID WITHOUT WET SIGNATURE



AURUM CONSULTING ENGINEERS MONTEREY BAY, INC.
Project No. 18217.00
60 Garden Court • Suite 210 • Monterey, CA 93940
T.831.646.3330 • F.831.646.3336 • www.aceintl.com



These drawings are instruments of service and are the property of AURUM CONSULTING ENGINEERS MONTEREY BAY, INC. All designs and other information in the drawings are for use on the specified project, and shall not be used otherwise without the expressed written permission of AURUM CONSULTING ENGINEERS MONTEREY BAY, INC.


REVISIONS

1. BACK CHECK 1/30/19
2. BACK CHECK 03/27/19
3.

## SYMBOLS, ABBREVIATIONS, LIGHT FIXTURE SCHEDULE, CODES, STANDARDS, NOTES & SHEET INDEX

CENTENNIAL RECREATION CENTER EXPANSION PROJECT

CITY OF MORGAN HILL
171 W EDMUNDSON AVE, MORGAN HILL, CA 95037


These drawings are instruments of service and are the property of WESTON MILES ARCHITECTS, INC. All designs and other information on the drawings are for use on the specified project and shall not be used otherwise without the expressed written permission of WESTON MILES ARCHITECTS, INC.
Written dimensions on these drawings shall have precedence over scaled dimensions. Contractors shall verify and be responsible for all dimensions and conditions on the job and this office shall be notified of any variations from the dimensions and conditions shown by these drawings. Shop details shall be submitted to this office for approval before proceeding with fabrication.
© Copyrighted 2018


DATE: 7/5/2018
JOB NO: 18001

E0.1

STATE OF CALIFORNIA
# INDOOR LIGHTING
CEC-NRCC-LTI-01-E (Revised 04/16)
CALIFORNIA ENERGY COMMISSION

| | |
|---|---|
| CERTIFICATE OF COMPLIANCE | NRCC-LTI-01-E |
| Indoor Lighting | (Page 1 of 6) |
| Project Name: Centennial Recreation Center | Date Prepared: 11/1/2018 |

**A. General Information**

| | | | | | | | |
|---|---|---|---|---|---|---|---|
| Climate Zone: 4 | Conditioned Floor Area: 3,607 | | | | | | |
| | Unconditioned Floor Area: 0 | | | | | | |
| Building Type: | ☑ | Nonresidential | ☐ | High-Rise Residential | ☐ | Hotel/Motel | |
| ☐ Schools | ☐ | Relocatable Public Schools | ☑ | Conditioned Spaces | ☐ | Unconditioned Spaces | |
| Phase of Construction: | ☐ | New Construction | ☐ | Addition | ☑ | Alteration | |
| Method of Compliance: | ☐ | Complete Building | ☑ | Area Category | ☐ | Tailored | |
| Project Address: 171 W. Edmundoson Ave. | | | | | | | |

**B. Lighting Compliance Documents** (select yes for each document included)

*For detailed instructions on the use of this and all Energy Efficiency Standards compliance documents, refer to the Nonresidential Manual published by the California Energy Commission.*

| YES | NO | COMP. DOC. | TITLE |
|---|---|---|---|
| ☑ | ☐ | NRCC-LTI-01-E | Certificate of Compliance. All Pages required on plans for all submittals. |
| ☑ | ☐ | NRCC-LTI-02-E | Lighting Controls, Certificate of Compliance, and PAF Calculation. All Pages required on plans for all submittals. |
| ☑ | ☐ | NRCC-LTI-03-E | Indoor Lighting Power Allowance |
| ☐ | ☑ | NRCC-LTI-04-E | Tailored Method Worksheets |
| ☐ | ☑ | NRCC-LTI-05-E | Line Voltage Track Lighting Worksheets |
| ☐ | ☐ | NRCC-LTI-06-E | Indoor Lighting Existing Conditions |

CA Building Energy Efficiency Standards - 2016 Nonresidential Compliance — April 2016

STATE OF CALIFORNIA
# INDOOR LIGHTING
CEC-NRCC-LTI-01-E (Revised 04/16)
CALIFORNIA ENERGY COMMISSION

| | |
|---|---|
| CERTIFICATE OF COMPLIANCE | NRCC-LTI-01-E |
| Indoor Lighting | (Page 2 of 6) |
| Project Name: Centennial Recreation Center | Date Prepared: 11/1/2018 |

**C. Summary of Allowed Lighting Power**

Conditioned and Unconditioned space Lighting must not be combined for compliance

| | Indoor Lighting Power for Conditioned Spaces | | Watts | Indoor Lighting Power for Unconditioned Spaces | | Watts |
|---|---|---|---|---|---|---|
| 01 | Installed Lighting NRCC-LTI-01-E, Table H, page 5 | + | 1,556 | Installed Lighting NRCC-LTI-01-E, Table H, page 5 | + | 0 |
| 02 | Portable Only for Offices NRCC-LTI-01-E, Table G, page 4 | + | | | | |
| 03 | Minus Lighting Control Credits NRCC-LTI-02-E, page 2 | - | 0 | Minus Lighting Control Credits NRCC-LTI-02-E, page 2 | - | 0 |
| 04 | Adjusted Installed Lighting Power (row 1 plus row 2 minus row 3) | = | 1,556 | Adjusted Installed Lighting Power (row 1 minus row 3) | = | 0 |
| | Complies ONLY if Installed ≤ Allowed (Box 04 < Box 05) | | | Complies ONLY if Installed ≤ Allowed (Box 04 < Box 05) | | |
| 05 | Allowed Lighting Power Conditioned NRCC-LTI-03-E, page 1<br>Alterations with replacement luminaires that have at least 50/35% lower power compared to the original existing luminaires, may instead use the allowed wattage from NRCC-LTI-06, page 2 | | 2,969 | Allowed Lighting Power Unconditioned NRCC-LTI-03-E, page 1<br>Alterations with replacement luminaires that have at least 50/35% lower power compared to the original existing luminaires, may instead use the allowed wattage from NRCC-LTI-06, page 2 | | 0 |

**D. Declaration of Required Certificates of Installation**

Declare by selecting yes for all of the Certificates that will be submitted. (Retain copies and verify forms are completed and signed.)

| YES | NO | Compliance Document/Title | |
|---|---|---|---|
| ☑ | ☐ | NRCI-LTI-01-E - Must be submitted for all buildings | ☐ Field Inspector |
| ☑ | ☐ | NRCI-LTI-02-E - Must be submitted for a lighting control system, or for an Energy Management Control System (EMCS), to be recognized for compliance. | ☐ Field Inspector |
| ☐ | ☑ | NRCI-LTI-03-E - Must be submitted for a line-voltage track lighting integral current limiter, or for a supplementary overcurrent protection panel used to energize only line-voltage track lighting, to be recognized for compliance. | ☐ Field Inspector |
| ☐ | ☑ | NRCI-LTI-04-E - Must be submitted for two interlocked systems serving an auditorium, a convention center, a conference room, a multipurpose room, or a theater to be recognized for compliance. | ☐ Field Inspector |
| ☐ | ☑ | NRCI-LTI-05-E - Must be submitted for a Power Adjustment Factor (PAF) to be recognized for compliance. | ☐ Field Inspector |
| ☐ | ☑ | NRCI-LTI-06-E - Must be submitted for additional wattage installed in a video conferencing studio to be recognized for compliance. | ☐ Field Inspector |

CA Building Energy Efficiency Standards - 2016 Nonresidential Compliance — April 2016

STATE OF CALIFORNIA
# INDOOR LIGHTING
CEC-NRCC-LTI-01-E (Revised 04/16)
CALIFORNIA ENERGY COMMISSION

| | |
|---|---|
| CERTIFICATE OF COMPLIANCE | NRCC-LTI-01-E |
| Indoor Lighting | (Page 3 of 6) |
| Project Name: Centennial Recreation Center | Date Prepared: 11/1/2018 |

**E. Declaration of Required Certificates of Acceptance**

Declare by selecting yes for all of the Certificates that will be submitted. (Retain copies and verify forms are completed and signed.)

| YES | NO | Compliance Document/Title | |
|---|---|---|---|
| ☑ | ☐ | NRCA-LTI-02-A - Must be submitted for occupancy sensors and automatic time switch controls. | ☐ Field Inspector |
| ☐ | ☑ | NRCA-LTI-03-A - Must be submitted for automatic daylight controls. | ☐ Field Inspector |
| ☐ | ☑ | NRCA-LTI-04-A - Must be submitted for demand responsive lighting controls. | ☐ Field Inspector |
| ☐ | ☑ | NRCA-LTI-05-A - Must be submitted for institutional tuning power adjustment factor (PAF). | ☐ Field Inspector |

*A Separate Lighting Schedule Must Be Filled Out for Conditioned and Unconditioned Spaces. Installed Lighting Power listed on this Lighting Schedule is only for:*
☐ CONDITIONED SPACE ☐ UNCONDITIONED SPACE

**F. Indoor Lighting Schedule and Field Inspection Energy Checklist**

☐ The actual indoor lighting power listed on the next 2 pages includes all installed permanent and planned portable lighting systems.
☐ When Complete Building Method is used for compliance, list each different type of luminaire on separate lines.
☐ When Area Category Method or Tailored Method is used for compliance, list each different type of luminaire by each different function area on separate lines
☐ Also include track lighting in schedule, and submit the track lighting compliance document (NRCC-LTI-05-E) when line-voltage track lighting is installed.

CA Building Energy Efficiency Standards - 2016 Nonresidential Compliance — April 2016

STATE OF CALIFORNIA
# INDOOR LIGHTING
CEC-NRCC-LTI-01-E (Revised 04/16)
CALIFORNIA ENERGY COMMISSION

| | |
|---|---|
| CERTIFICATE OF COMPLIANCE | NRCC-LTI-01-E |
| Indoor Lighting | (Page 4 of 6) |
| Project Name: Centennial Recreation Center | Date Prepared: 11/1/2018 |

**G. Installed Portable Luminaires in Offices – Exception to Section 140.6(a)**

☐ This section shall be filled out ONLY for portable luminaires in offices (As defined in §100.1). All other planned portable luminaires shall be documented on next page of this compliance document.
☐ This section is used to determine if greater than 0.3 watts of portable lighting is planned for any office
☐ Fill out a separate line for each different office. Small offices that are typical (having the same general and portable lighting) may be grouped together. This allowance shall not be traded between offices having different lighting systems.

| Office Portable Luminaire Schedule | | | Office Installed Portable Luminaire W/ft² | | | | | Office Location | Field Inspector | |
|---|---|---|---|---|---|---|---|---|---|---|
| 1 | 2 | 3 | 4 | 5 | 6 | 7 | 8 | 9 | 10 | |
| Complete Luminaire Description (i.e., LED, under cabinet, furniture mounted direct/indirect) | Watts per Luminaire | Number of Luminaires | Installed portable luminaire watts in this office (G02 x G03) | Square feet of this office | Watts per square foot (G04 / G05) | If G06 ≤ 0.3, enter zero; If G06 > 0.3, (G06-0.3) | (G05 x G07) | Identify Office area in which these portable luminaires are installed | Pass | Fail |
| | | | | | | | | | ☐ | ☐ |
| | | | | | | | | | ☐ | ☐ |
| | | | | | | | | | ☐ | ☐ |
| | | | | | | | | | ☐ | ☐ |
| | | | | | | | | | ☐ | ☐ |
| Total installed portable luminaire watts that are greater than 0.3 W/ft² per office: | | | | | | | | Enter sum total of all pages into NRCC-LTI-01-E; Page 1 | | |

CA Building Energy Efficiency Standards - 2016 Nonresidential Compliance — April 2016

STATE OF CALIFORNIA
# INDOOR LIGHTING
CEC-NRCC-LTI-01-E (Revised 04/16)
CALIFORNIA ENERGY COMMISSION

| | |
|---|---|
| CERTIFICATE OF COMPLIANCE | NRCC-LTI-01-E |
| Indoor Lighting | (Page 5 of 6) |
| Project Name: Centennial Recreation Center | Date Prepared: 11/1/2018 |

*A Separate Lighting Schedule Must Be Filled Out for Conditioned and Unconditioned Spaces. Installed Lighting Power listed on this Lighting Schedule is only for:*
☑ CONDITIONED SPACE ☐ UNCONDITIONED SPACE

**H. Indoor Lighting Schedule and Field Inspection Energy Checklist**

| Luminaire Schedule | | Installed Watts | | | | | Location | Field Inspector[1] | |
|---|---|---|---|---|---|---|---|---|---|
| 01 | 02 | 03 | 04 | | 05 | 06 | 07 | 08 | |
| Name or Item Tag | Complete Luminaire Description (i.e, 3 lamp fluorescent troffer, F32T8, one dimmable electronic ballast) | Watts per Luminaire | How wattage was determined: CEC Default from NA8 | According to §130.0(c) | Number Luminaires | Total Installed Watts in this area (H03 x H05) | Primary Function area in which these luminaires are installed | Pass | Fail |
| A | 16w Wall Wash LED | 16.0 | ☐ | ☑ | 4 | 64 | Corridor/Restroom/Support | ☐ | ☐ |
| C | 32w Pendant Mount CFL | 29.0 | ☑ | ☐ | 3 | 87 | Corridor/Restroom/Support | ☐ | ☐ |
| CE | 32w Pendant Mount CFL | 29.0 | ☐ | ☑ | 3 | 87 | Corridor/Restroom/Support | ☐ | ☐ |
| D | 33w Surface MountLED | 33.0 | ☐ | ☑ | 6 | 198 | Corridor/Restroom/Support | ☐ | ☐ |
| F | 25w Wall Mount LED | 25.0 | ☐ | ☑ | 10 | 250 | Lounge, Recreation | ☐ | ☐ |
| G | 87w Round High Bay LED | 87.0 | ☐ | ☑ | 7 | 609 | Lounge, Recreation | ☐ | ☐ |
| GE | 87w Round High Bay LED | 87.0 | ☐ | ☑ | 3 | 261 | Lounge, Recreation | ☐ | ☐ |
| | | | ☐ | ☐ | | | | ☐ | ☐ |
| | | | ☐ | ☐ | | | | ☐ | ☐ |
| | INSTALLED WATTS PAGE TOTAL: | | | | | 1,556 | Enter sum total of all pages into NRCC-LTI-01-E; Page 2 | | |

CA Building Energy Efficiency Standards - 2016 Nonresidential Compliance — April 2016

STATE OF CALIFORNIA
# INDOOR LIGHTING
CEC-NRCC-LTI-01-E (Revised 04/16)
CALIFORNIA ENERGY COMMISSION

| | |
|---|---|
| CERTIFICATE OF COMPLIANCE | NRCC-LTI-01-E |
| Indoor Lighting | (Page 6 of 6) |
| Project Name: Centennial Recreation Center | Date Prepared: 11/1/2018 |

**DOCUMENTATION AUTHOR'S DECLARATION STATEMENT**

1. I certify that this Certificate of Compliance documentation is accurate and complete.

| | |
|---|---|
| Documentation Author Name: J. Elias Cosio | Documentation Author Signature: [signature] |
| Company: Aurum Consulting Engineers | Signature Date: 11/1/2018 |
| Address: 60 Garden Ct. Suite 210 | CEA Certification Identification (If applicable): |
| City/State/Zip: Monterey, CA 93940 | Phone: 831-646-3330 |

**RESPONSIBLE PERSON'S DECLARATION STATEMENT**

I certify the following under penalty of perjury, under the laws of the State of California:
1. The information provided on this Certificate of Compliance is true and correct.
2. I am eligible under Division 3 of the Business and Professions Code to accept responsibility for the building design or system design identified on this Certificate of Compliance (responsible designer).
3. The energy features and performance specifications, materials, components, and manufactured devices for the building design or system design identified on this Certificate of Compliance conform to the requirements of Title 24, Part 1 and Part 6 of the California Code of Regulations.
4. The building design features or system design features identified on this Certificate of Compliance are consistent with the information provided on other applicable compliance documents, worksheets, calculations, plans and specifications submitted to the enforcement agency for approval with this building permit application.
5. I will ensure that a completed signed copy of this Certificate of Compliance shall be made available with the building permit(s) issued for the building, and made available to the enforcement agency for all applicable inspections. I understand that a completed signed copy of this Certificate of Compliance is required to be included with the documentation the builder provides to the building owner at occupancy.

| | |
|---|---|
| Responsible Designer Name: Jhim Handrex Meza | Responsible Designer Signature: [signature] |
| Company: Aurum Consulting Engineers | Date Signed: |
| Address: 300 S. 1st. St., Suite 342 | License: E21989 |
| City/State/Zip: San Jose, CA 95113 | Phone: 408-564-7925 |

CA Building Energy Efficiency Standards - 2016 Nonresidential Compliance — April 2016

STATE OF CALIFORNIA
# INDOOR LIGHTING – LIGHTING CONTROLS
CEC-NRCC-LTI-02-E (Revised 01/16)
CALIFORNIA ENERGY COMMISSION

| | |
|---|---|
| CERTIFICATE OF COMPLIANCE | NRCC-LTI-02-E |
| Indoor Lighting - Lighting Controls | (Page 1 of 3) |
| Project Name: Centennial Recreation Center | Date Prepared: 11/1/2018 |

**A. Mandatory Lighting Control Declaration Statements** (Indicate if the measure applies by checking yes or no below.)

| YES | NO | Control Requirements |
|---|---|---|
| ☑ | ☐ | Lighting shall be controlled by self-contained lighting control devices which are certified to the Energy Commission according to the Title 20 Appliance Efficiency Regulations in accordance with Section 110.9. |
| ☑ | ☐ | Lighting shall be controlled by a lighting control system or energy management control system in accordance with §110.9. An Installation Certificate shall be submitted in accordance with Section 130.4(b). |
| ☐ | ☑ | One or more Track Lighting Integral Current Limiters shall be installed which have been certified to the Energy Commission in accordance with §110.9 and §130.0. Additionally, an Installation Certificate shall be submitted in accordance with Section 130.4(b). |
| ☐ | ☑ | A Track Lighting Supplementary Overcurrent Protection Panel shall be installed in accordance with Section 110.9 and Section 130.0. Additionally, an Installation Certificate shall be installed in accordance with Section 130.4(b). |
| ☑ | ☐ | All lighting controls and equipment shall comply with the applicable requirements in §110.9 and shall be installed in accordance with the manufacturer's instructions in accordance with Section 130.1. |
| ☑ | ☐ | All luminaires shall be functionally controlled with manually switched ON and OFF lighting controls in accordance with Section 130.1(a). |
| ☑ | ☐ | General lighting shall be separately controlled from all other lighting systems in an area. Floor and wall display, window display, case display, ornamental, and special effects lighting shall each be separately controlled on circuits that are 20 amps or less. When track lighting is used, general, display, ornamental, and special effects lighting shall each be separately controlled; in accordance with Section 130.1(a)4. |
| ☑ | ☐ | The general lighting of any enclosed area 100 square feet or larger, with a connected lighting load that exceeds 0.5 watts per square foot shall meet the multi-level lighting control requirements in accordance with Section 130.1(b). |
| ☑ | ☐ | All installed indoor lighting shall be equipped with controls that meet the applicable Shut-OFF control requirements in Section 130.1(c). |
| ☐ | ☑ | Lighting in all Daylit Zones shall be controlled in accordance with the requirements in Section 130.1(d) and daylit zones are shown on the plans. |
| ☐ | ☑ | Lighting power in buildings larger than 10,000 square feet shall be capable of being automatically reduced in response to a Demand Responsive Signal in accordance with Section 130.1(e). |
| ☑ | ☐ | Before an occupancy permit is granted for a newly constructed building or area, or a new lighting system serving a building, area, or site is operated for normal use, indoor lighting controls serving the building, area, or site shall be certified as meeting the Acceptance Requirements for Code Compliance in accordance with Section 130.4.(a). The controls required to meet the Acceptance Requirements include automatic daylight controls, automatic shut-OFF controls, and demand responsive controls. |

CA Building Energy Efficiency Standards - 2016 Nonresidential Compliance — January 2016

STATE OF CALIFORNIA
# INDOOR LIGHTING – LIGHTING CONTROLS
CEC-NRCC-LTI-02-E (Revised 01/16)
CALIFORNIA ENERGY COMMISSION

| | |
|---|---|
| CERTIFICATE OF COMPLIANCE | NRCC-LTI-02-E |
| Indoor Lighting - Lighting Controls | (Page 2 of 3) |
| Project Name: Centennial Recreation Center | Date Prepared: 11/1/2018 |

A separate document must be filled out for Conditioned and Unconditioned Spaces. This page is used only for the following:
☑ CONDITIONED SPACES ☐ UNCONDITIONED SPACES

**B. Mandatory and Prescriptive Indoor Lighting Control Schedule, PAF Calculation, and Field Inspection Checklist**

| Lighting Control Schedule | | | Standards Complying With[1] (✓ all that apply, or enter 'E' if Exempted) | | | | | | | PAF Credit Calculation[2] | | | | Field Inspector | |
|---|---|---|---|---|---|---|---|---|---|---|---|---|---|---|---|
| 01 | 02 | 03 | 04 | 05 | 06 | 07 | 08 | 09 | 10 | 11 | 12 | 13 | 14 | 15 | |
| Location in Building | Type/Description of Lighting Control (i.e.: occupancy sensor, automatic time switch, dimmer, automatic daylight, etc...) | # of Units | §130.1(a) | §130.0(b) | §130.1(c) | §130.1(d) | §130.1(e) | §140.6(a)2 | §140.6(d) | Watts of Controlled Lighting | PAF | Control Credit (K x L) | ✓ if Acceptance Test Required | Pass | Fail |
| See Sheet E5.1 | Manual Area | 3 | ☑ | ☐ | ☐ | ☐ | ☐ | ☐ | ☐ | | | | ✓ | ☐ | ☐ |
| Aerobics 128 | Multi Level | 5 | ☐ | ☑ | ☐ | ☐ | ☐ | ☐ | ☐ | | | | ✓ | ☐ | ☐ |
| Storage 128A | Multi Level | 1 | ☐ | ☑ | ☐ | ☐ | ☐ | ☐ | ☐ | | | | ✓ | ☐ | ☐ |
| Storage 128A | Occupancy Sensor | 2 | ☐ | ☐ | ☑ | ☐ | ☐ | ☐ | ☐ | | | | ✓ | ☐ | ☐ |
| Hallway 100F | Multi Level | 3 | ☐ | ☑ | ☐ | ☐ | ☐ | ☐ | ☐ | | | | ✓ | ☐ | ☐ |
| Hallway 100F | Occupancy Sensor | 2 | ☐ | ☐ | ☑ | ☐ | ☐ | ☐ | ☐ | | | | ✓ | ☐ | ☐ |
| Control Credit PAGE TOTAL (Sum of Column 13): | | | | | | | | | | | | 0 | | | |
| IF MULTIPLE PAGES ARE USED, ENTER SUM TOTAL OF Control Credit for all pages HERE (Sum of all Column 13): | | | | | | | | | | | | 0 | | | |
| | | | | | | | | | | | | Enter Control Credit total into NRCC-LTI-01-E; Page 1. | | | |

*1. §130.1(a) = Manual area controls; §130.0(b) = Multi Level; §130.1(c) = Auto Shut-Off; §130.1(d) = Mandatory Daylight; §130.1(e) = Demand Responsive; §140.6(d) = Additional lighting controls installed to earn a PAF; §140.6(d) = Prescriptive Secondary Sidelit Daylight Controls.*
*2. Check Table 140.6-A for correct Factor. PAFs shall not be traded between conditioned and unconditioned spaces. As a condition to earn a PAF, an Installation Certificate is also required to be filled out, signed, and submitted.*

CA Building Energy Efficiency Standards - 2016 Nonresidential Compliance — January 2016

STATE OF CALIFORNIA
# INDOOR LIGHTING – LIGHTING CONTROLS
CEC-NRCC-LTI-02-E (Revised 01/16)
CALIFORNIA ENERGY COMMISSION

| | |
|---|---|
| CERTIFICATE OF COMPLIANCE | NRCC-LTI-02-E |
| Indoor Lighting - Lighting Controls | (Page 3 of 3) |
| Project Name: Centennial Recreation Center | Date Prepared: 11/1/2018 |

**DOCUMENTATION AUTHOR'S DECLARATION STATEMENT**

1. I certify that this Certificate of Compliance documentation is accurate and complete.

| | |
|---|---|
| Documentation Author Name: J. Elias Cosio | Documentation Author Signature: [signature] |
| Company: Aurum Consulting Engineers | Signature Date: 11/1/2018 |
| Address: 60 Garden Ct, Suite 210 | CEA Certification Identification (If applicable): |
| City/State/Zip: Monterey, CA 93940 | Phone: 831-646-3330 |

**RESPONSIBLE PERSON'S DECLARATION STATEMENT**

I certify the following under penalty of perjury, under the laws of the State of California:
1. The information provided on this Certificate of Compliance is true and correct.
2. I am eligible under Division 3 of the Business and Professions Code to accept responsibility for the building design or system design identified on this Certificate of Compliance (responsible designer).
3. The energy features and performance specifications, materials, components, and manufactured devices for the building design or system design identified on this Certificate of Compliance conform to the requirements of Title 24, Part 1 and Part 6 of the California Code of Regulations.
4. The building design features or system design features identified on this Certificate of Compliance are consistent with the information provided on other applicable compliance documents, worksheets, calculations, plans and specifications submitted to the enforcement agency for approval with this building permit application.
5. I will ensure that a completed signed copy of this Certificate of Compliance shall be made available with the building permit(s) issued for the building, and made available to the enforcement agency for all applicable inspections. I understand that a completed signed copy of this Certificate of Compliance is required to be included with the documentation the builder provides to the building owner at occupancy.

| | |
|---|---|
| Responsible Designer Name: Jhim Handrex Meza | Responsible Designer Signature: [signature] |
| Company: Aurum Consulting Engineers | Date Signed: |
| Address: 300 S. 1st. St., Suite 342 | License: E21989 |
| City/State/Zip: San Jose, CA 95113 | Phone: 408-564-7925 |

CA Building Energy Efficiency Standards - 2016 Nonresidential Compliance — January 2016

STATE OF CALIFORNIA
# INDOOR LIGHTING POWER ALLOWANCE
CEC-NRCC-LTI-03-E (Revised 04/16)
CALIFORNIA ENERGY COMMISSION

| | |
|---|---|
| CERTIFICATE OF COMPLIANCE | NRCC-LTI-03-E |
| Certificate of Compliance - Indoor Lighting Power Allowance | (Page 1 of 4) |
| Project Name: Centennial Recreation Center | Date Prepared: 11/1/2018 |

A separate page must be filled out for Conditioned and Unconditioned Spaces. This page is only for:
☑ CONDITIONED spaces ☐ UNCONDITIONED spaces

**A. SUMMARY TOTALS OF LIGHTING POWER ALLOWANCES**

☐ If using Complete Building Method for compliance, use only the total in column (a) as total allowed building watts.
☐ If using Area Category Method, Tailored Method, or a combination of Area Category and Tailored Method for compliance, use only the total in column (b) as the total allowed building watts

| | (a) | (b) |
|---|---|---|
| 01 Complete Building Method Allowed Watts. Documented in section B of NRCC-LTI-03-E (below on this page) | | |
| 02 Area Category Method Allowed Watts. Documented in section C-1 of NRCC-LTI-03-E (below on this page) | | 2,969 |
| 03 Tailored Method Allowed Watts. Documented in section A of NRCC-LTI-04-E | | 0 |
| TOTAL ALLOWED BUILDING WATTS. Enter number into correct cell on NRCC-LTI-01, Page 2, Row 1 | | 2,969 |

☐ Check here if building contains both conditioned and unconditioned areas.

**B. COMPLETE BUILDING METHOD LIGHTING POWER ALLOWANCE**

| 01 | 02 | | 03 | | 04 |
|---|---|---|---|---|---|
| TYPE OF BUILDING (From §140.6 Table 140.6-B) | WATTS PER ft² | x | COMPLETE BLDG. AREA | = | ALLOWED WATTS |
| | | | | | |
| | Total Area: | | | | |
| Total Watts. Enter Total Watts into section A, row 1 (Above on this page) | | | | | |

**C-1 AREA CATEGORY METHOD TOTAL LIGHTING POWER ALLOWANCES**

| | Watts |
|---|---|
| Total from section C-2. | 2,969 |
| Total from section C-3. | 0 |
| Total Watts. Enter Total Watts into section A, row 2 (Above on this page). | 2,969 |
| **For Alterations Only** – Reduced lighting power option (Total Allowed Watts x 0.85). Enter this value into section A, row 2 if using this option. | |

CA Building Energy Efficiency Standards - 2016 Nonresidential Compliance — April 2016

STATE OF CALIFORNIA
# INDOOR LIGHTING POWER ALLOWANCE
CEC-NRCC-LTI-03-E (Revised 04/16)
CALIFORNIA ENERGY COMMISSION

| | |
|---|---|
| CERTIFICATE OF COMPLIANCE | NRCC-LTI-03-E |
| Certificate of Compliance - Indoor Lighting Power Allowance | (Page 2 of 4) |
| Project Name: Centennial Recreation Center | Date Prepared: 11/1/2018 |

A separate page must be filled out for Conditioned and Unconditioned Spaces. This page is only for:
☑ CONDITIONED spaces ☐ UNCONDITIONED spaces

**C-2 AREA CATEGORY METHOD GENERAL LIGHTING POWER ALLOWANCE**

☐ Do not include portable lighting for offices. Portable lighting for offices shall be documented only in Section G of NRCC-LTI-01-E.
☐ Separately list lighting for each primary function area as defined in §100.1 of the Standards.

| 01 | | 02 | | 03 | | 04 |
|---|---|---|---|---|---|---|
| AREA CATEGORY (From §140.6 Table 140.6-C) | | | | | | |
| Location in Building | Primary Function Area per Table 140.6-C | WATTS PER ft² | x | AREA (ft²) | = | ALLOWED WATTS |
| Aerobics | Lounge, Recreation | 0.90 | | 2,682 | | 2,414 |
| Storage/Hallway | Corridor/Restroom/Support | 0.60 | | 925 | | 555 |
| | | | | TOTALS 3,607 | | |
| Enter sum total Area Category allowed watts into section C-1 of NRCC-LTI-03-E (this compliance document) | | | | | | 2,969 WATTS |

CA Building Energy Efficiency Standards - 2016 Nonresidential Compliance — April 2016

STATE OF CALIFORNIA
# INDOOR LIGHTING POWER ALLOWANCE
CEC-NRCC-LTI-03-E (Revised 04/16)
CALIFORNIA ENERGY COMMISSION

| | |
|---|---|
| CERTIFICATE OF COMPLIANCE | NRCC-LTI-03-E |
| Certificate of Compliance - Indoor Lighting Power Allowance | (Page 3 of 4) |
| Project Name: Centennial Recreation Center | Date Prepared: 11/1/2018 |

A separate page must be filled out for Conditioned and Unconditioned Spaces. This page is only for:
☑ CONDITIONED spaces ☐ UNCONDITIONED spaces

**C-3 AREA CATEGORY METHOD ADDITIONAL LIGHTING WATTAGE ALLOWANCE (from Table 140.6-C Footnotes)**

| 01 | 02 | 03[2] | 04 | 05 | 06 | 07 |
|---|---|---|---|---|---|---|
| Primary Function | Sq Ft or Linear ft[1] | Additional Watts Allowed | Wattage Allowance (02 x 03) | Description(s) and Quantity of Special Luminaire Types in each Primary Function Area | Total Design Watts[3] | ALLOWED WATTS Smaller of 04 or 06 |
| TOTALS – Enter into TOTAL AREA CATEGORY METHOD ADDITIONAL ALLOWANCES – Section C-1 | | | | | | 0 |

1. Use linear feet only for additional allowance for white board or chalk board. All other additional Area Category allowances shall use watts per square foot.
2. Additional watts are available only when allowed according to the footnotes on bottom of Table 140.6-C, which include: Specialized task work; Ornamental lighting; Precision commercial and industrial work; Per linear foot of white board or chalk board; Accent, display and feature lighting; and Videoconferencing studio lighting..
3. Luminaire classification and wattage shall be determined in accordance with §130.0(c) of the Standards.

CA Building Energy Efficiency Standards - 2016 Nonresidential Compliance — April 2016

STATE OF CALIFORNIA
# INDOOR LIGHTING POWER ALLOWANCE
CEC-NRCC-LTI-03-E (Revised 04/16)
CALIFORNIA ENERGY COMMISSION

| | |
|---|---|
| CERTIFICATE OF COMPLIANCE | NRCC-LTI-03-E |
| Certificate of Compliance - Indoor Lighting Power Allowance | (Page 4 of 4) |
| Project Name: Centennial Recreation Center | Date Prepared: 11/1/2018 |

**DOCUMENTATION AUTHOR'S DECLARATION STATEMENT**

1. I certify that this Certificate of Compliance documentation is accurate and complete.

| | |
|---|---|
| Documentation Author Name: J. Elias Cosio | Documentation Author Signature: [signature] |
| Company: Aurum Consulting Engineers | Signature Date: 11/1/2018 |
| Address: 60 Garden Ct, Suite 210 | CEA Certification Identification (If applicable): |
| City/State/Zip: Monterey, CA 93940 | Phone: 831-646-3330 |

**RESPONSIBLE PERSON'S DECLARATION STATEMENT**

I certify the following under penalty of perjury, under the laws of the State of California:
1. The information provided on this Certificate of Compliance is true and correct.
2. I am eligible under Division 3 of the Business and Professions Code to accept responsibility for the building design or system design identified on this Certificate of Compliance (responsible designer).
3. The energy features and performance specifications, materials, components, and manufactured devices for the building design or system design identified on this Certificate of Compliance conform to the requirements of Title 24, Part 1 and Part 6 of the California Code of Regulations.
4. The building design features or system design features identified on this Certificate of Compliance are consistent with the information provided on other applicable compliance documents, worksheets, calculations, plans and specifications submitted to the enforcement agency for approval with this building permit application.
5. I will ensure that a completed signed copy of this Certificate of Compliance shall be made available with the building permit(s) issued for the building, and made available to the enforcement agency for all applicable inspections. I understand that a completed signed copy of this Certificate of Compliance is required to be included with the documentation the builder provides to the building owner at occupancy.

| | |
|---|---|
| Responsible Designer Name: Jhim Handrex Meza | Responsible Designer Signature: [signature] |
| Company: Aurum Consulting Engineers | Date Signed: |
| Address: 300 S. 1st. St., Suite 342 | License: E21989 |
| City/State/Zip: San Jose, CA 95113 | Phone: 408-564-7925 |

CA Building Energy Efficiency Standards - 2016 Nonresidential Compliance — April 2016

JOB COPY
These plans mu... ...job at all times.
CITY OF MORGAN HILL
BUILDING DIVISION

WESTON MILES
ARCHITECTS
17500 Depot Street, Suite #200
Morgan Hill, CA 95037
1 • 408 • 779 • 6686
• Architecture • Landscape •

NOT VALID WITHOUT WET SIGNATURE

AURUM CONSULTING ENGINEERS MONTEREY BAY, INC.
Project No. 18217.00
60 Garden Court • Suite 210 • Monterey, CA 93940
T 831.646.3330 • F 831.646.3336 • www.acemb.com

REVISIONS
1 BACK CHECK 1/30/19
2
3

# CALIFORNIA ENERGY COMPLIANCE TITLE 24 (BUILDING INTERIOR)
## CENTENNIAL RECREATION CENTER EXPANSION PROJECT
CITY OF MORGAN HILL
171 W EDMUNDSON AVE, MORGAN HILL, CA 95037

These drawings are instruments of service and are the property of WESTON MILES ARCHITECTS, INC. All designs and other information on the drawings are for use on the specified project and shall not be used otherwise without the expressed written permission of WESTON MILES ARCHITECTS, INC.
Written dimensions on these drawings shall have precedence over scaled dimensions. Contractors shall verify and be responsible for all dimensions and conditions on the job and this office shall be notified of any variations from the dimensions and conditions shown by these drawings. Shop details shall be submitted to this office for approval before proceeding with fabrication.
© Copyrighted 2018

DATE: 7/5/2018
JOB NO: 18001

E0.2

STATE OF CALIFORNIA
## OUTDOOR LIGHTING
CEC-NRCC-LTO-01-E (Revised 04/16) — CALIFORNIA ENERGY COMMISSION
CERTIFICATE OF COMPLIANCE — NRCC-LTO-01-E
Outdoor Lighting — (Page 1 of 4)
Project Name: Centennial Recreation Center — Date Prepared:

**A. General Information**

| | |
|---|---|
| Project Address: 171 W. Edmundson Ave. Morgan Hill, CA 95037 | Total Illuminated Hardscape Area: 11,836 |
| Phase of Construction: ☐ New Construction ☐ Addition ☑ Alteration | |
| Outdoor Lighting Zone (LZ) ☐ LZ-1 ☐ LZ-2 ☑ LZ-3 ☐ LZ-4 | |
| I have confirmed with the AHJ which LZ applies to this site. For default lighting zone designations, see Title 24 Part 6, §10-114 | |

**B. Lighting Compliance Documents** (check box for each document included)

*For detailed instructions on the use of this and all Energy Efficiency Standards compliance documents, refer to the Nonresidential Manual published by the California Energy Commission.*

| | | |
|---|---|---|
| ☑ | NRCC-LTO-01-E | Certificate of Compliance |
| ☑ | NRCC-LTO-02-E | Outdoor Lighting Controls Certificate of Compliance |
| ☑ | NRCC-LTO-03-E | Outdoor Lighting Power Allowance Certificate of Compliance |
| ☐ | NRCC-LTO-04-E | Outdoor Lighting Existing Conditions Certificate of Compliance |

**C. Summary of Allowed Outdoor Lighting Power**

| | | Watts |
|---|---|---|
| 01 | Sum Total ALLOWED Outdoor Lighting Wattage from NRCC-LTO-03-E, page 1<br>Alterations with NO increase of connected lighting load may instead use the allowed wattage from NRCC-LTO-04, page 2.<br>Complies ONLY if Installed (Box 02) ≤ Allowed (Box 01) | 1,243 |
| 02 | Sum Total INSTALLED Outdoor Lighting Wattage from NRCC-LTO-01-E, page 3. | 477 |

**D. Declaration of Required Installation Certificates**

Declare by checking all Installation Certificates that will be submitted. (Retain copies and verify compliance documents are completed and signed.)

| | |
|---|---|
| ☑ NRCI-LTO-01-E - Must be submitted for all buildings | ☐ Field Inspector |
| ☑ NRCI-LTO-02-E - Must be submitted for a lighting control system, or for an Energy Management Control System (EMCS), to be recognized for compliance. | ☐ Field Inspector |

**E. Declaration of Required Certificates of Acceptance**

Declare by checking all of the Certificates of Acceptance that will be submitted. (Retain copies and verify compliance documents are completed and signed.)

| | |
|---|---|
| ☑ NRCA-LTO-02-A - Must be submitted for outdoor lighting controls. | ☐ Field Inspector |

**F. Schedule of Luminaires Exempt from the Outdoor Lighting Power Requirements in §140.7**

| 01 | 02 |
|---|---|
| Name or Symbol | Description of exempt luminaire in accordance with the exemptions |
| | |



STATE OF CALIFORNIA
## OUTDOOR LIGHTING
CEC-NRCC-LTO-01-E (Revised 04/16) — CALIFORNIA ENERGY COMMISSION
CERTIFICATE OF COMPLIANCE — NRCC-LTO-01-E
Outdoor Lighting — (Page 2 of 4)
Project Name: Centennial Recreation Center — Date Prepared: 11/1/2018

**G. Schedule of Luminaires Exempt from the Cutoff Requirements in §130.2(b)**

| 01 | 02 |
|---|---|
| Name or Symbol | Description of exempt luminaire in accordance with the exemptions |
| | |

**H. Schedule of Luminaires Exempt from the Outdoor Lighting Control Requirements in §130.2(c)**

| 01 | 02 |
|---|---|
| Name or Symbol | Description of exempt luminaire in accordance with the exemptions |
| | |



STATE OF CALIFORNIA
## OUTDOOR LIGHTING
CEC-NRCC-LTO-01-E (Revised 02/16) — CALIFORNIA ENERGY COMMISSION
CERTIFICATE OF COMPLIANCE — NRCC-LTO-01-E
Outdoor Lighting — (Page 3 of 4)
Project Name: Centennial Recreation Center — Date Prepared: 11/1/2018

**I. Outdoor Lighting Schedule and Field Inspection Energy Checklist**

| 01 Name or Item Tag | 02 Complete Luminaire Description | 03 Watts per Luminaire | 04 CEC Default from NA8 | 04 According to §130.0(c) | 05 Number of Luminaires | 06 Total Installed Watts in this area (3 x 5) | 07 Primary Function area in which the luminaires are installed (Outdoor Lighting Zone) | 08 BUG Rating | 09 Pass | 09 Fail |
|---|---|---|---|---|---|---|---|---|---|---|
| XC | 75w Pole Mount LED | 75.0 | ☐ | ☑ | 2 | 150 | Automotive Hardscape | UH: n/a UL: n/a FVH: n/a BVH: n/a FH: n/a BH: n/a | ☐ | ☐ |
| XA | 27w Wall Mount LED | 27.0 | ☐ | ☑ | 9 | 243 | Pedestrian Hardscape | UH: n/a UL: n/a FVH: n/a BVH: n/a FH: n/a BH: n/a | ☐ | ☐ |
| XBE | 28w Wall Mount LED | 28.0 | ☐ | ☑ | 1 | 28 | Main Entrance | UH: n/a UL: n/a FVH: n/a BVH: n/a FH: n/a BH: n/a | ☐ | ☐ |
| | | | | | INSTALLED WATTS PAGE TOTAL: | 421 | Enter sum total of all pages (Sum Total INSTALLED Outdoor lighting wattage) into NRCC-LTO-01-E, page 1. | | 477 | |



STATE OF CALIFORNIA
## OUTDOOR LIGHTING
CEC-NRCC-LTO-01-E (Revised 02/16) — CALIFORNIA ENERGY COMMISSION
CERTIFICATE OF COMPLIANCE — NRCC-LTO-01-E
Outdoor Lighting — (Page 3 of 4)
Project Name: Centennial Recreation Center — Date Prepared: 11/1/2018

**I. Outdoor Lighting Schedule and Field Inspection Energy Checklist**

| 01 Name or Item Tag | 02 Complete Luminaire Description | 03 Watts per Luminaire | 04 CEC Default from NA8 | 04 According to §130.0(c) | 05 Number of Luminaires | 06 Total Installed Watts in this area (3 x 5) | 07 Primary Function area in which the luminaires are installed (Outdoor Lighting Zone) | 08 BUG Rating | 09 Pass | 09 Fail |
|---|---|---|---|---|---|---|---|---|---|---|
| XBE | 28w Wall Mount LED | 28.0 | ☐ | ☑ | 2 | 56 | Other Entrance/Exit | UH: n/a UL: n/a FVH: n/a BVH: n/a FH: n/a BH: n/a | ☐ | ☐ |
| | | | ☐ | ☐ | | | | UH: UL: FVH: BVH: FH: BH: | ☐ | ☐ |
| | | | ☐ | ☐ | | | | UH: UL: FVH: BVH: FH: BH: | ☐ | ☐ |
| | | | | | INSTALLED WATTS PAGE TOTAL: | 56 | Enter sum total of all pages (Sum Total INSTALLED Outdoor lighting wattage) into NRCC-LTO-01-E, page 1. | | 477 | |



STATE OF CALIFORNIA
## OUTDOOR LIGHTING
CEC-NRCC-LTO-01-E (Revised 02/16) — CALIFORNIA ENERGY COMMISSION
CERTIFICATE OF COMPLIANCE — NRCC-LTO-01-E
Outdoor Lighting — (Page 4 of 4)
Project Name: Centennial Recreation Center — Date Prepared: 11/1/2018

**DOCUMENTATION AUTHOR'S DECLARATION STATEMENT**

1. I certify that this Certificate of Compliance documentation is accurate and complete.

| | |
|---|---|
| Documentation Author Name: J. Elias Cosio | Documentation Author Signature: |
| Company: Aurum Consulting Engineers | Signature Date: 11/1/2018 |
| Address: 60 Garden Ct, Suite 210 | CEA Certification Identification (if applicable): |
| City/State/Zip: Monterey, CA 93940 | Phone: 831-646-3330 |

**RESPONSIBLE PERSON'S DECLARATION STATEMENT**

I certify the following under penalty of perjury, under the laws of the State of California:

1. The information provided on this Certificate of Compliance is true and correct.
2. I am eligible under Division 3 of the Business and Professions Code to accept responsibility for the building design or system design identified on this Certificate of Compliance (responsible designer).
3. The energy features and performance specifications, materials, components, and manufactured devices for the building design or system design identified on this Certificate of Compliance conform to the requirements of Title 24, Part 1 and Part 6 of the California Code of Regulations.
4. The building design features or system design features identified on this Certificate of Compliance are consistent with the information provided on other applicable compliance documents, worksheets, calculations, plans and specifications submitted to the enforcement agency for approval with this building permit application.
5. I will ensure that a completed signed copy of this Certificate of Compliance shall be made available with the building permit(s) issued for the building, and made available to the enforcement agency for all applicable inspections. I understand that a completed signed copy of this Certificate of Compliance is required to be included with the documentation the builder provides to the building owner at occupancy.

| | |
|---|---|
| Responsible Designer Name: Jhim Handrex Meza | Responsible Designer Signature: |
| Company: Aurum Consulting Engineers | Date Signed: |
| Address: 300 S. 1st. St., Suite 342 | License: E21989 |
| City/State/Zip: San Jose, CA 95113 | Phone: 408-564-7925 |



STATE OF CALIFORNIA
## OUTDOOR LIGHTING CONTROLS
CEC-NRCC-LTO-02-E (Revised 08/16) — CALIFORNIA ENERGY COMMISSION
CERTIFICATE OF COMPLIANCE — NRCC-LTO-02-E
Outdoor Lighting Controls — (Page 1 of 3)
Project Name: Centennial Recreation Center — Date Prepared: 11/1/2018

**A. Mandatory Outdoor Lighting Control Declaration Statements**

Check all that apply:

- ☐ Lighting shall be controlled by self-contained lighting control devices which are certified to the Energy Commission according to the Title 20 Appliance Efficiency Regulations in accordance with §110.9(a).
- ☐ Lighting shall be controlled by a lighting control system or energy management control system in accordance with §110.9. An Installation Certificate shall be submitted in accordance with §130.4(b).
- ☑ All lighting controls and equipment shall comply with the applicable requirements in §110.9 and shall be installed in accordance with the manufacturer's instructions in accordance with §130.0(d).
- ☐ Part-Night Outdoor Lighting Controls, as defined in Section 100.1(b), shall meet the requirements in Section 110.9(b)5.
- ☐ All outdoor incandescent luminaires rated over 100 watts, determined in accordance with Section 130.0(c), shall be controlled by a motion sensor.
- ☐ All outdoor luminaires rated for use with lamps greater than 150 lamp watts, determined in accordance with Section 130.0(c), shall comply with Uplight and Glare requirements in accordance with Section 130.2(b).
- ☐ All installed outdoor lighting shall be controlled by a photocontrol or outdoor astronomical time-switch control, or other control capable of automatically switching OFF in accordance with Section 130.2(c)1.
- ☑ All installed outdoor lighting shall be independently controlled from other electrical loads by an automatic scheduling control in accordance with Section 130.2(c)2.
- ☐ All installed outdoor lighting, where the bottom of the luminaire is mounted 24 feet or less above the ground, shall be controlled with automatic lighting controls in accordance with Section 130.2(c)3.
- ☐ For Outdoor Sales Frontage, an automatic lighting control shall be installed in accordance with Section 130.2(c)4.
- ☐ For Building Facade, Ornamental Hardscape and Outdoor Dining lighting, an automatic lighting control shall be installed in accordance with Section 130.2(c)5.
- ☑ Before an occupancy permit is granted for the newly constructed building or for the addition, or for any altered outdoor lighting, the outdoor lighting controls shall be certified as meeting the Acceptance Requirements for Code Compliance in accordance with §130.4.(a). Outdoor lighting controls shall comply with the applicable requirements of Section 130.2(c) and Reference Nonresidential Appendix NA7.8.



STATE OF CALIFORNIA
## OUTDOOR LIGHTING CONTROLS
CEC-NRCC-LTO-02-E (Revised 08/16) — CALIFORNIA ENERGY COMMISSION
CERTIFICATE OF COMPLIANCE — NRCC-LTO-02-E
Outdoor Lighting Controls — (Page 2 of 3)
Project Name: Centennial Recreation Center — Date Prepared: 11/1/2018

**B. Mandatory Outdoor Lighting Control Schedule and Field Inspection Checklist**

| 01 Location and Application of Luminaires Being Controlled | 02 Type/ Description of Lighting Control (i.e. outdoor motion sensor, outdoor photocontrol, outdoor astronomical time-switch control, automatic scheduling control, part-night outdoor lighting control) | 03 # of Units | 04 §130.2(a) | 05 §130.2(c)1 | 06 §130.2(c)2 | 07 §130.2(c)3 | 08 §130.2(c)4 | 09 §130.2(c)5 | 10 ✓ if Acceptance Test Required | 11 Field Inspector Pass | 11 Fail |
|---|---|---|---|---|---|---|---|---|---|---|---|
| | | | | | | | | | ☐ | ☐ | ☐ |

Outdoor Lighting Control Schedule; Standards Complying With (✓ all that apply, or enter 'E' if Exempted)



STATE OF CALIFORNIA
## OUTDOOR LIGHTING CONTROLS
CEC-NRCC-LTO-02-E (Revised 08/16) — CALIFORNIA ENERGY COMMISSION
CERTIFICATE OF COMPLIANCE — NRCC-LTO-02-E
Outdoor Lighting Controls — (Page 3 of 3)
Project Name: Centennial Recreation Center — Date Prepared: 11/1/2018

**DOCUMENTATION AUTHOR'S DECLARATION STATEMENT**

1. I certify that this Certificate of Compliance documentation is accurate and complete.

| | |
|---|---|
| Documentation Author Name: J. Elias Cosio | Documentation Author Signature: |
| Company: Aurum Consulting Engineers | Signature Date: 11/1/2018 |
| Address: 60 Garden Ct, Suite 210 | CEA Certification Identification (if applicable): |
| City/State/Zip: Monterey, CA 93940 | Phone: 831-646-3330 |

**RESPONSIBLE PERSON'S DECLARATION STATEMENT**

I certify the following under penalty of perjury, under the laws of the State of California:

1. The information provided on this Certificate of Compliance is true and correct.
2. I am eligible under Division 3 of the Business and Professions Code to accept responsibility for the building design or system design identified on this Certificate of Compliance (responsible designer).
3. The energy features and performance specifications, materials, components, and manufactured devices for the building design or system design identified on this Certificate of Compliance conform to the requirements of Title 24, Part 1 and Part 6 of the California Code of Regulations.
4. The building design features or system design features identified on this Certificate of Compliance are consistent with the information provided on other applicable compliance documents, worksheets, calculations, plans and specifications submitted to the enforcement agency for approval with this building permit application.
5. I will ensure that a completed signed copy of this Certificate of Compliance shall be made available with the building permit(s) issued for the building, and made available to the enforcement agency for all applicable inspections. I understand that a completed signed copy of this Certificate of Compliance is required to be included with the documentation the builder provides to the building owner at occupancy.

| | |
|---|---|
| Responsible Designer Name: Jhim Handrex Meza | Responsible Designer Signature: |
| Company: Aurum Consulting Engineers | Date Signed: |
| Address: 300 S. 1st. St., Suite 342 | License: E21989 |
| City/State/Zip: San Jose, CA 95113 | Phone: 408-564-7925 |



STATE OF CALIFORNIA
## OUTDOOR LIGHTING POWER ALLOWANCES
CEC-NRCC-LTO-03-E (Revised 01/16) — CALIFORNIA ENERGY COMMISSION
CERTIFICATE OF COMPLIANCE — NRCC-LTO-03-E
Outdoor Lighting Power Allowances — (Page 1 of 4)
Project Name: Centennial Recreation Center — Date Prepared: 11/1/2018

**A. OUTDOOR LIGHTING POWER ALLOWANCE SUMMARY**

1. General Hardscape Lighting Power Allowance (Site Total from Section B of NRCC-LTO-03-E) — 1. 1,159
2. Additional Specific "use it or lose it" Lighting Power Allowances listed in each of these cells shall be identical to total allowed watts determined in Section C-1 to C-4 of NRCC-LTO-03-E.

| PER APPLICATION from Section C-1 | | PER UNIT LENGTH (SALES FRONTAGE) from Section C-2 | | PER HARDSCAPE AREA (ORNAMENTAL LIGHTING) from Section C-3 | | PER SPECIFIC AREA from Section C-4. | | | |
|---|---|---|---|---|---|---|---|---|---|
| 84 | + | 0 | + | 0 | + | 0 | = | 2. | 84 |

3. Sum Total ALLOWED Outdoor Lighting Wattage (add rows 1 and 2) — 3. 1,243

**B. GENERAL HARDSCAPE LIGHTING POWER ALLOWANCE FROM TABLE 140.7-A**

| 01 Name of Area | 02 Illuminated Hardscape Area | 03 AWA Per Square Foot | 04 AWA (B02 x B03) | 05 Perimeter Length of General Hardscape | 06 LPA per Linear Foot | 07 LWA (B05 x B06) | 08 IWA (Watts) | 09 Total General Hardscape Lighting Allowance B04 + B07 + B08 |
|---|---|---|---|---|---|---|---|---|
| Parking Lot | 11,836 | 0.040 | 473 | 473 | 0.350 | 166 | 520 | 1,159 |
| Pedestrian | 0 | 0.040 | 0 | 0 | 0.350 | 0 | 0 | 0 |
| | | | | | | | TOTAL | 1,159 |

Area Wattage Allowance (AWA) (02–04); Linear Wattage Allowance (LWA) (05–07); Initial Wattage Allowance (IWA) (08).



STATE OF CALIFORNIA
## OUTDOOR LIGHTING POWER ALLOWANCES
CEC-NRCC-LTO-03-E (Revised 01/16) — CALIFORNIA ENERGY COMMISSION
CERTIFICATE OF COMPLIANCE — NRCC-LTO-03-E
Outdoor Lighting Power Allowances — (Page 2 of 4)
Project Name: Centennial Recreation Center — Date Prepared: 11/1/2018

**C. ADDITIONAL "USE IT OR LOSE IT" OUTDOOR LIGHTING POWER ALLOWANCES FOR SPECIFIC APPLICATIONS**

- ☐ The additional specific outdoor lighting power allowance shall be the smaller of the allowed lighting power or the actual lighting power used.
- ☐ Use Outdoor Lighting Zone (OLZ) that is documented on page 1 of NRCC-LTO-01-E to calculate the specific wattage allowances.

**C-1. WATTAGE ALLOWANCE PER APPLICATION – Table 140.7-B**

☐ Available only for qualifying locations, which include Building Entrances or Exits; Primary Entrances to Senior Care Facilities, Police Stations, Hospitals, Fire Stations, and Emergency Vehicle Facilities; Drive Up Windows; Vehicle Service Station Uncovered Fuel Dispenser, ATM Machine Lighting

☐ If more than one luminaire type is used per location, use multiple rows for that location

| 01 Name of Location for Which Allowance is Claimed | 02 Number of Qualifying Locations | 03 Wattage Allowance per Qualifying Location | 04 Allotted Watts (02 x 03) | 05 Luminaire Code or Symbol | 06 Luminaire Description | 07 Luminaire Quantity | 08 Watts per Luminaire | 09 Design Watts (07 x 08) | 10 Allowed Watts (smaller of 04 or 09) |
|---|---|---|---|---|---|---|---|---|---|
| Building Entrance 1 | 1 | 35 | 35 | XBE | 28w Wall Mount LED | 1 | 28.0 | 28 | 28 |
| Building Entrance 2 | 2 | 35 | 70 | XBE | 28w Wall Mount LED | 2 | 28.0 | 56 | 56 |
| | | | | | | | | Sum total allowance per application on this site: | 84 |

ALLOTTED WATTS (02–05); DESIGN WATTS (06–09)

**C-2. WATTAGE ALLOWANCE PER UNIT LENGTH (Sales Frontage) from Table 140.7-B**

☐ If more than one luminaire type is used per location, use multiple rows for that location

| 01 Name of Location for Which Allowance is Claimed | 02 Linear Feet of Sales Frontage | 03 Wattage Allowance per Linear Foot | 04 Allotted Watts (02 x 03) | 05 Luminaire Code or Symbol | 06 Luminaire Description | 07 Luminaire Quantity | 08 Watts per Luminaire | 09 Design Watts (07 x 08) | 10 Allowed Watts (smaller of 04 or 09) |
|---|---|---|---|---|---|---|---|---|---|
| | | | | | | | | Sum total allowance for sales frontage on the site: | 0 |



STATE OF CALIFORNIA
## OUTDOOR LIGHTING POWER ALLOWANCES
CEC-NRCC-LTO-03-E (Revised 01/16) — CALIFORNIA ENERGY COMMISSION
CERTIFICATE OF COMPLIANCE — NRCC-LTO-03-E
Outdoor Lighting Power Allowances — (Page 3 of 4)
Project Name: Centennial Recreation Center — Date Prepared: 11/1/2018

**C-3. WATTAGE ALLOWANCE PER SQUARE FOOT OF HARDSCAPE AREA (Ornamental Lighting) – Table 140.7-B**

☐ Allowance for the total site illuminated hardscape area. Luminaires qualifying for this allowance shall be rated for 100 watts or less as determined in accordance with Section 130.0(c), and shall be post-top luminaires, lanterns, pendant luminaires, or chandeliers.

☐ If more than one luminaire type is used per location, use multiple rows for that location

| 01 Name of area for which ornamental allowance is claimed | 02 Square Feet of Hardscape | 03 Wattage Allowance per Square Foot | 04 Allotted Watts (02 x 03) | 05 Luminaire Code or Symbol | 06 Luminaire Description | 07 Luminaire Quantity | 08 Watts per Luminaire | 09 Design Watts (07 x 08) | 10 Allowed Watts (smaller of 04 or 09) |
|---|---|---|---|---|---|---|---|---|---|
| | | | | | | | | Sum total allowance for ornamental lighting on the site: | 0 |

**C-4. WATTAGE ALLOWANCE PER SQUARE FOOT OF SPECIFIC AREA - Table 140.7-B**

☐ Allowances for Building Facades; Outdoor Sales Lots; Vehicle Service Station Hardscape; Vehicle Service Station Canopies; Sales Canopies; Non-sales Canopies; Tunnels; Guard Stations; Student Pick-up/Drop-off zone; Outdoor Dining; Special Security Lighting for Retail Parking and Pedestrian Hardscape.

☐ If more than one luminaire type is used per location, use multiple rows for that location

| 01 Name of Location for Which Allowance is Claimed | 02 Illuminated Area of Application | 03 Wattage Allowance per square Foot | 04 Allotted Watts (02 x 03) | 05 Luminaire Code or Symbol | 06 Luminaire Description | 07 Luminaire Quantity | 08 Watts per Luminaire | 09 Design Watts (07 x 08) | 10 Allowed Watts (smaller of 04 or 09) |
|---|---|---|---|---|---|---|---|---|---|
| | | | | | | | | Sum total allowance for specific area on the site: | 0 |



STATE OF CALIFORNIA
## OUTDOOR LIGHTING POWER ALLOWANCES
CEC-NRCC-LTO-03-E (Revised 01/16) — CALIFORNIA ENERGY COMMISSION
CERTIFICATE OF COMPLIANCE — NRCC-LTO-03-E
Outdoor Lighting Power Allowances — (Page 4 of 4)
Project Name: Centennial Recreation Center — Date Prepared: 11/1/2018

**DOCUMENTATION AUTHOR'S DECLARATION STATEMENT**

1. I certify that this Certificate of Compliance documentation is accurate and complete.

| | |
|---|---|
| Documentation Author Name: J. Elias Cosio | Documentation Author Signature: |
| Company: Aurum Consulting Engineers | Signature Date: 11/1/2018 |
| Address: 60 Garden Ct, Suite 210 | CEA Certification Identification (if applicable): |
| City/State/Zip: Monterey, CA 93940 | Phone: 831-646-3330 |

**RESPONSIBLE PERSON'S DECLARATION STATEMENT**

I certify the following under penalty of perjury, under the laws of the State of California:

1. The information provided on this Certificate of Compliance is true and correct.
2. I am eligible under Division 3 of the Business and Professions Code to accept responsibility for the building design or system design identified on this Certificate of Compliance (responsible designer).
3. The energy features and performance specifications, materials, components, and manufactured devices for the building design or system design identified on this Certificate of Compliance conform to the requirements of Title 24, Part 1 and Part 6 of the California Code of Regulations.
4. The building design features or system design features identified on this Certificate of Compliance are consistent with the information provided on other applicable compliance documents, worksheets, calculations, plans and specifications submitted to the enforcement agency for approval with this building permit application.
5. I will ensure that a completed signed copy of this Certificate of Compliance shall be made available with the building permit(s) issued for the building, and made available to the enforcement agency for all applicable inspections. I understand that a completed signed copy of this Certificate of Compliance is required to be included with the documentation the builder provides to the building owner at occupancy.

| | |
|---|---|
| Responsible Designer Name: Jhim Handrex Meza | Responsible Designer Signature: |
| Company: Aurum Consulting Engineers | Date Signed: |
| Address: 300 S. 1st. St., Suite 342 | License: E21989 |
| City/State/Zip: San Jose, CA 95113 | Phone: 408-564-7925 |



JOB COPY
These plans must be kept on the job at all times.
CITY OF MORGAN HILL
BUILDING DIVISION

WESTON MILES ARCHITECTS
17500 Depot Street, Suite #200
Morgan Hill, CA 95037
1 • 408 • 779 • 6686
• Architecture • Landscape •

NOT VALID WITHOUT WET SIGNATURE

AURUM CONSULTING ENGINEERS MONTEREY BAY, INC.
Project No. 18217.00
60 Garden Court • Suite 210 • Monterey, CA 93940
T.831.646.3330 • F.831.646.3336 • www.aceme.com

REVISIONS
1 BACK CHECK 1/30/19
2
3

# CALIFORNIA ENERGY COMPLIANCE TITLE 24 (BUILDING EXTERIOR)
## CENTENNIAL RECREATION CENTER EXPANSION PROJECT
CITY OF MORGAN HILL
171 W EDMUNDSON AVE, MORGAN HILL, CA 95037

These drawings are instruments of service and are the property of WESTON MILES ARCHITECTS, INC. All designs and other information on the drawings are for use on the specified project and shall not be used otherwise without the expressed written permission of WESTON MILES ARCHITECTS, INC.
Written dimensions on these drawings shall have precedence over scaled dimensions. Contractors shall verify and be responsible for all dimensions and conditions on the job and this office shall be notified of any variations from the dimensions and conditions shown by these drawings. Shop details shall be submitted to this office for approval before proceeding with fabrication.
© Copyrighted 2018

DATE: 7/5/2018
JOB NO: 18001

E0.3

# PANELBOARD SCHEDULES

## 1 4 PANEL LA1

| Voltage: | 120/208V,3ø | Bussing: | 225A |
|---|---|---|---|
| Wire: | 4W | Feed: | TOP |
| Type: | NEMA 1 | Mounting: | FLUSH |
| Mains: | M.L.O. | 3 A.I.C. | 22,000 |

| Load | A | B | C | Bkr | Ck | Ck | Bkr | A | B | C | Load |
|---|---|---|---|---|---|---|---|---|---|---|---|
| FANS - AEROBICS | 900 | | | 20/1 | 1 | 2 | 20/1 | 540 | | | RECEPTS - HALLWAY |
| SPARE | | | | 20/1 | 3 | 4 | 20/1 | | | | SPARE |
| SPARE | | | | 20/1 | 5 | 6 | 20/1 | | | 540 | RECEPTS - AEROBICS |
| SPARE | | | | 20/1 | 7 | 8 | 20/1 | 540 | | | RECEPTS - AEROBICS |
| SPARE | | | | 20/1 | 9 | 10 | 20/1 | | 540 | | RECEPTS - AEROBICS |
| SPACE ONLY | | | | - | 11 | 12 | 20/1 | | | 360 | RECEPTS - AEROBICS |
| SPACE ONLY | | | | - | 13 | 14 | 20/1 | 180 | | | RECEPT - OUTDOOR |
| SPACE ONLY | | | | - | 15 | 16 | 20/1 | | | | SPARE |
| SPACE ONLY | | | | - | 17 | 18 | 20/1 | | | | SPARE |
| SPACE ONLY | | | | - | 19 | 20 | 20/1 | 360 | | | RECEPTS - ROOF |
| SPACE ONLY | | | | - | 21 | 22 | 20/1 | | | | SPARE |
| SPACE ONLY | | | | - | 23 | 24 | 20/1 | | | | SPARE |
| SPACE ONLY | | | | - | 25 | 26 | 20/1 | | | | SPARE |
| SPACE ONLY | | | | - | 27 | 28 | 20/1 | | | | SPARE |
| SPACE ONLY | | | | - | 29 | 30 | - | | | | SPACE ONLY |
| SPACE ONLY | | | | - | 31 | 32 | - | | | | SPACE ONLY |
| SPACE ONLY | | | | - | 33 | 34 | - | | | | SPACE ONLY |
| SPACE ONLY | | | | - | 35 | 36 | - | | | | SPACE ONLY |
| SPACE ONLY | | | | - | 37 | 38 | - | | | | SPACE ONLY |
| SPACE ONLY | | | | - | 39 | 40 | - | | | | SPACE ONLY |
| SPACE ONLY | | | | - | 41 | 42 | - | | | | SPACE ONLY |
| | 900 | 0 | 0 | | | | | 1620 | 540 | 900 | |

1. SUBMITTAL SHALL MATCH EXACT BREAKER LOCATIONS SHOWN.
2. PROVIDE & INSTALL LOCK-ON DEVICE.
3. SERIES RATED TO ___AMP WITH THE PANEL MAIN OR NEXT UPSTREAM BREAKER FOR MAIN LUG PANEL.
4. LABEL PANEL FOR SHORT CIRCUIT AMPS AVAILABLE PER CEC 110-24.

| | |
|---|---|
| KVA Phase A | 2.5 |
| KVA Phase B | 0.5 |
| KVA Phase C | 0.9 |
| Total Connected Load KVA | 4.0 |
| Total Load Amperes | 11 |

## 1 3 REVISED PANEL HA

| Voltage: | 277/480V,3ø | Bussing: | 225A |
|---|---|---|---|
| Wire: | 4W | Feed: | - |
| Type: | NEMA 1 | Mounting: | SURFACE |
| Mains: | M.L.O. | A.I.C. | SERIES RATED |

| Note | Load | A | B | C | Bkr | Ck | Ck | Bkr | A | B | C | Load | Note |
|---|---|---|---|---|---|---|---|---|---|---|---|---|---|
| 1 | (E) LTG - RECEPT HALLWAY | 3200 | | | 20/1 | 1 | 2 | 20/1 | 2300 | | | (E) LTG - GYM WEST 'cn' | 1 |
| 1 | (E) LTG - STAFF,ADMIN,WORK | | 3007 | | 20/1 | 3 | 4 | 20/1 | | 2750 | | (E) LTG - GYM WEST 'cq' | 1 |
| 1 | (E) LTG - FITNESS,BREAK, FACL MGR | | | 3580 | 20/1 | 5 | 6 | 20/1 | | | 3600 | (E) LTG - GYM WEST 'cm & cp' | 1 |
| 1 | (E) LTG - FITNESS,STOR | 2130 | | | 20/1 | 7 | 8 | 20/1 | 2300 | | | (E) LTG - GYM WEST 'cs' | 1 |
| 1 | (E) LTG - AEROBICS, STOR, JAN | | 3470 | | 20/1 | 9 | 10 | 20/1 | | 2090 | | (E) LTG - GYM WEST 'cu' | 1 |
| 1 | (E) LTG - MENS LOCKER,RCV,ELECT | | | 3370 | 20/1 | 11 | 12 | 20/1 | | | 3600 | (E) LTG - GYM WEST 'cr & ct' | 1 |
| 1 | (E) LTG - WOMENS LOCKER, CHG | 2780 | | | 20/1 | 13 | 14 | 20/1 | 1650 | | | REVISED LTG - EXTERIOR BLDG 'T1' | 1 4 |
| 1 | (E) LTG - NATATORIUM | | 2450 | | 20/1 | 15 | 16 | 20/1 | | 1650 | | REVISED LTG - EXTERIOR BLDG 'T2' | 1 4 |
| 1 | (E) LTG - NATATORIUM | | | 2450 | 20/1 | 17 | 18 | 20/1 | | | 2200 | (E) EMERGENCT LTG NEW ADDITION | 1 |
| 1 | (E) LTG - NATATORIUM | 2300 | | | 20/1 | 19 | 20 | 20/1 | 1600 | | | LTG - STUDIO | 2 |
| 1 | (E) LTG - NATATORIUM,POOL SOT | | 2890 | | 20/1 | 21 | 22 | 20/1 | | | | (E) SPARE | |
| 1 | (E) LTG - NATATORIUM | | | 2300 | 20/1 | 23 | 24 | 20/1 | | | | (E) SPARE | |
| 1 | (E) LTG - NATATORIUM | 2300 | | | 20/1 | 25 | 26 | 20/1 | | | | (E) SPARE | |
| 1 | (E) LTG - NATATORIUM | | 2300 | | 20/1 | 27 | 28 | 20/1 | | | | (E) SPARE | |
| 1 | (E) LTG - NATATORIUM,MECH,CHEM | | | 3040 | 20/1 | 29 | 30 | 20/1 | | | | (E) SPARE | |
| 1 | (E) LTG - NATATORIUM,PLUM | 3020 | | | 20/1 | 31 | 32 | 20/1 | | | | (E) SPARE | |
| 1 | (E) LTG-PARKING LOT LCP2 45 | | 1800 | | 20/1 | 33 | 34 | 20/1 | | | | (E) SPARE | |
| 1 | (E) LTG-PARKING LOT LCP2 45 | | | 1800 | 20/1 | 35 | 36 | 20/1 | | | | (E) SPARE | |
| | SPACE ONLY | | | | - | 37 | 38 | - | | | | SPACE ONLY | |
| | SPACE ONLY | | | | - | 39 | 40 | - | | | | SPACE ONLY | |
| | SPACE ONLY | | | | - | 41 | 42 | - | | | | SPACE ONLY | |
| | | 15730 | 15917 | 16540 | | | | | 7850 | 6490 | 9400 | | |

1. EXISTING TO REMAIN
2. NEW LOAD, EXISTING CIRCUIT BREAKER
3. CONTRACTOR SHALL PROVIDE A NEW TYPED PANELBOARD SCHEDULE DIRECTORY FOR NEW LOAD ADDED.
4. NEW STUDIO EXTERIOR BUILDING LIGHTS CONNECTED AT THIS CIRCUIT.

| | |
|---|---|
| KVA Phase A | 23.6 |
| KVA Phase B | 22.4 |
| KVA Phase C | 25.9 |
| Total Connected Load KVA | 71.9 |
| Total Load Amperes | 86 |

## 3 REVISED PANEL H1G

| Voltage: | 277/480V,3ø | Bussing: | 100A |
|---|---|---|---|
| Wire: | 4W | Feed: | - |
| Type: | NEMA 1 | Mounting: | SURFACE |
| Mains: | M.L.O. | A.I.C. | SERIES RATED |

| Note | Load | A | B | C | Bkr | Ck | Ck | Bkr | A | B | C | Load | Note |
|---|---|---|---|---|---|---|---|---|---|---|---|---|---|
| 1 | EXISTING EF-1 | 400 | | | 15/3 | 1 | 2 | 20/3 | 4432 | | | EXISTING LOAD | 1 |
| 1 | EXISTING EF-1 | | 400 | | | 3 | 4 | | | 4432 | | EXISTING LOAD | 1 |
| 1 | EXISTING EF-1 | | | 400 | | 5 | 6 | | | | 4432 | EXISTING LOAD | 1 |
| 1 | EXISTING EF-3 | 500 | | | 15/3 | 7 | 8 | 20/1 | | | | EXISTING SPARE | 1 |
| 1 | EXISTING EF-3 | | 500 | | | 9 | 10 | 20/1 | | | | EXISTING SPARE | 1 |
| 1 | EXISTING EF-3 | | | 500 | | 11 | 12 | 20/1 | | | | EXISTING SPARE | 1 |
| 1 | EXISTING MAU-1 | 940 | | | 15/3 | 13 | 14 | 20/1 | | | | EXISTING SPARE | 1 |
| 1 | EXISTING MAU-1 | | 940 | | | 15 | 16 | 20/1 | | | | EXISTING SPARE | 1 |
| 1 | EXISTING MAU-1 | | | 940 | | 17 | 18 | 20/1 | | | | EXISTING SPARE | 1 |
| | SPACE ONLY | | | | - | 19 | 20 | - | | | | SPACE ONLY | |
| | SPACE ONLY | | | | - | 21 | 22 | - | | | | SPACE ONLY | |
| | SPACE ONLY | | | | - | 23 | 24 | - | | | | SPACE ONLY | |
| | SPACE ONLY | | | | - | 25 | 26 | - | | | | SPACE ONLY | |
| | SPACE ONLY | | | | - | 27 | 28 | - | | | | SPACE ONLY | |
| | SPACE ONLY | | | | - | 29 | 30 | - | | | | SPACE ONLY | |
| | SPACE ONLY | | | | - | 31 | 32 | - | | | | SPACE ONLY | |
| | SPACE ONLY | | | | - | 33 | 34 | - | | | | SPACE ONLY | |
| | SPACE ONLY | | | | - | 35 | 36 | - | | | | SPACE ONLY | |
| 2 | AC-5 | 6648 | | | 40/3 | 37 | 38 | - | | | | SPACE ONLY | |
| 2 | AC-5 | | 6648 | | | 39 | 40 | - | | | | SPACE ONLY | |
| 2 | AC-5 | | | 6648 | | 41 | 42 | - | | | | SPACE ONLY | |
| | | 8488 | 8488 | 8488 | | | | | 4432 | 4432 | 4432 | | |

1. EXISTING TO REMAIN
2. NEW LOAD, NEW CIRCUIT BREAKER.
3. CONTRACTOR SHALL PROVIDE A NEW TYPED PANELBOARD SCHEDULE DIRECTORY FOR NEW ADDED LOAD.

| | |
|---|---|
| KVA Phase A | 12.9 |
| KVA Phase B | 12.9 |
| KVA Phase C | 12.9 |
| Total Connected Load KVA | 38.8 |
| Total Load Amperes | 47 |

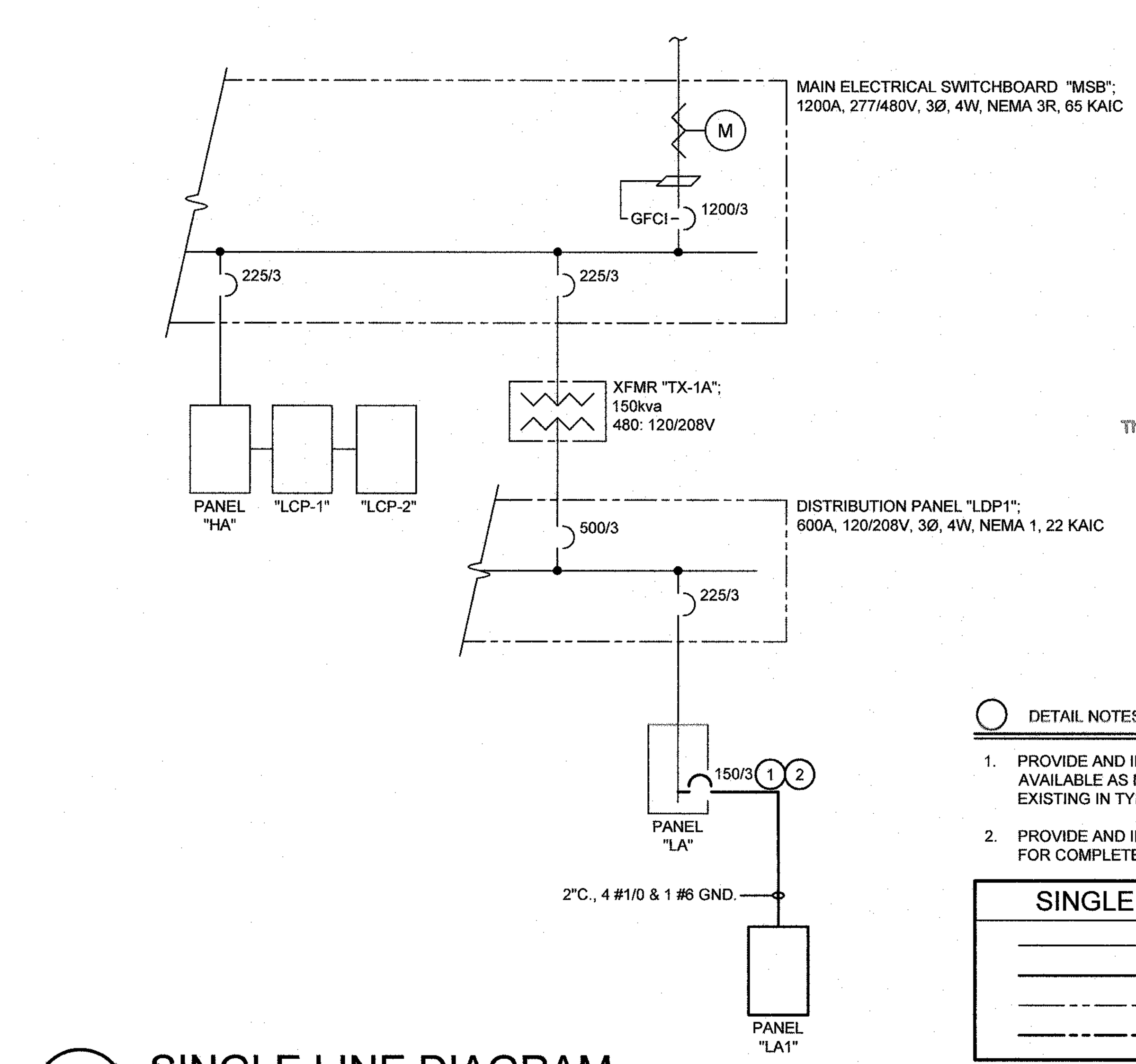


1 SINGLE LINE DIAGRAM
NO SCALE

JOB COPY
These plans mu[illegible] job at all times.
CITY OF MORGAN HILL
BUILDING DIVISION

DETAIL NOTES:

1. PROVIDE AND INSTALL NEW CIRCUIT BREAKER TO SPACE AVAILABLE AS NOTED. NEW CIRCUIT BREAKER SHALL MATCH EXISTING IN TYPE AND AIC RATING.
2. PROVIDE AND INSTALL MOUNTING HARDWARE AS NECESSARY FOR COMPLETE INSTALLATION.

SINGLE LINE DIAGRAM LEGEND

- (EXISTING)
- (NEW)
- (E) FLOOR/PAD MOUNTED EQUIPMENT
- (N) FLOOR/PAD MOUNTED EQUIPMENT

WESTON MILES ARCHITECTS
17500 Depot Street, Suite #200
Morgan Hill, CA 95037
1 • 408 • 779 • 6686
• Architecture • Landscape •

NOT VALID WITHOUT WET SIGNATURE

AURUM CONSULTING ENGINEERS MONTEREY BAY, INC.
Project No. 18217.00
60 Garden Court • Suite 210 • Monterey, CA 93940
T.831.646.3330 • F.831.646.3336 • www.acemb.com

These drawings are instruments of service and are the property of AURUM CONSULTING ENGINEERS MONTEREY BAY, INC. All designs and other information in the drawings are for use on the specified project and shall not be used otherwise without the expressed written permission of AURUM CONSULTING ENGINEERS MONTEREY BAY, INC.

REVISIONS

1 BACK CHECK 1/30/19
2
3

ELECTRICAL SINGLE LINE DIAGRAM & PANELBOARD SCHEDULES

CENTENNIAL RECREATION CENTER EXPANSION PROJECT

CITY OF MORGAN HILL
171 W EDMUNDSON AVE, MORGAN HILL, CA 95037

These drawings are instruments of service and are the property of WESTON MILES ARCHITECTS, INC. All designs and other information on the drawings are for use on the specified project and shall not be used otherwise without the expressed written permission of WESTON MILES ARCHITECTS, INC.

Written dimensions on these drawings shall have precedence over scaled dimensions. Contractors shall verify and be responsible for all dimensions and conditions on the job and this office shall be notified of any variations from the dimensions and conditions shown by these drawings. Shop details shall be submitted to this office for approval before proceeding with fabrication.

© Copyrighted 2018

DATE: 7/5/2018

JOB NO: 18001

E1.1

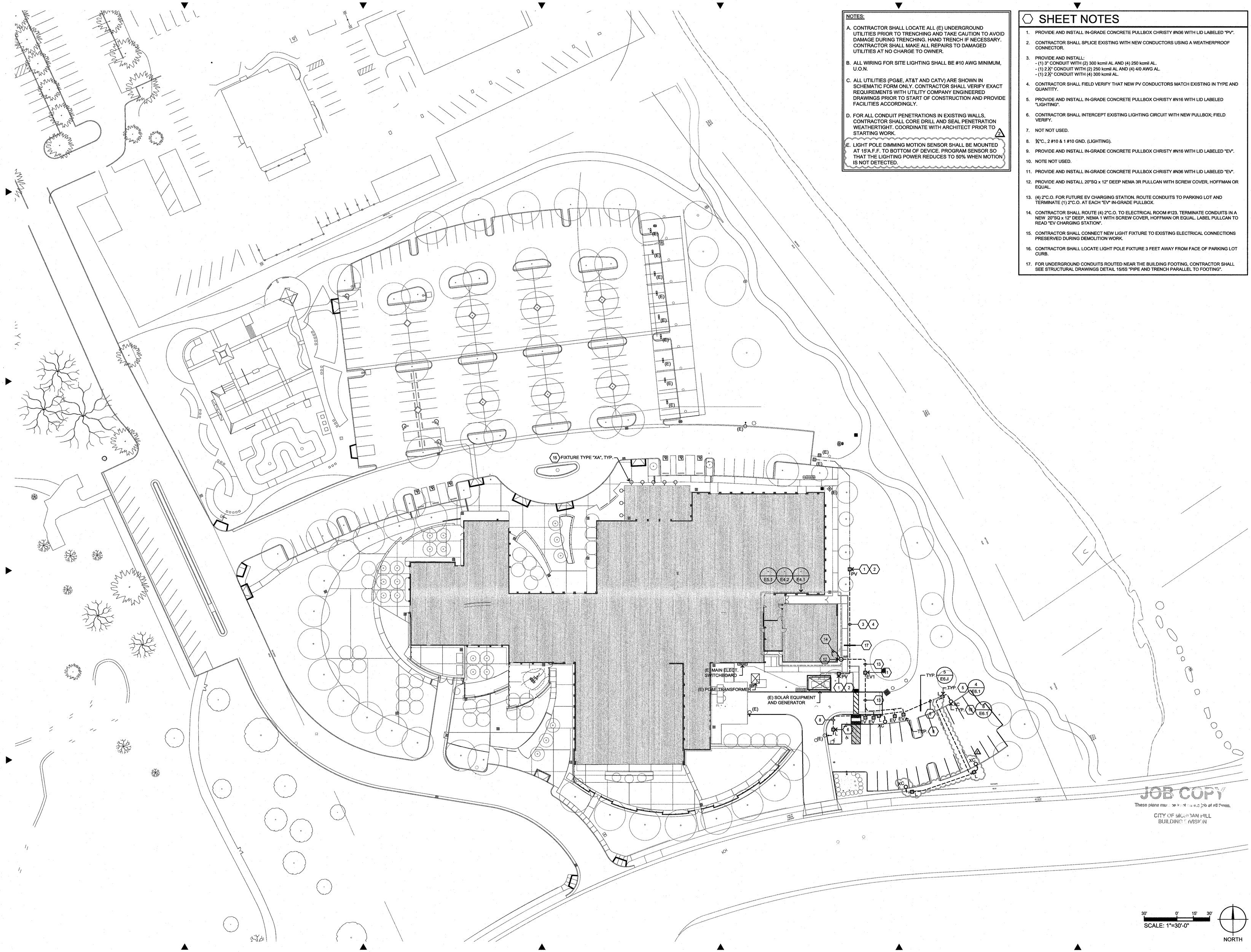


NOTES:

A. CONTRACTOR SHALL LOCATE ALL (E) UNDERGROUND UTILITIES PRIOR TO TRENCHING AND TAKE CAUTION TO AVOID DAMAGE DURING TRENCHING. HAND TRENCH IF NECESSARY. CONTRACTOR SHALL MAKE ALL REPAIRS TO DAMAGED UTILITIES AT NO CHARGE TO OWNER.

B. ALL WIRING FOR SITE LIGHTING SHALL BE #10 AWG MINIMUM, U.O.N.

C. ALL UTILITIES (PG&E, AT&T AND CATV) ARE SHOWN IN SCHEMATIC FORM ONLY. CONTRACTOR SHALL VERIFY EXACT REQUIREMENTS WITH UTILITY COMPANY ENGINEERED DRAWINGS PRIOR TO START OF CONSTRUCTION AND PROVIDE FACILITIES ACCORDINGLY.

D. FOR ALL CONDUIT PENETRATIONS IN EXISTING WALLS, CONTRACTOR SHALL CORE DRILL AND SEAL PENETRATION WEATHERTIGHT. COORDINATE WITH ARCHITECT PRIOR TO STARTING WORK. 2

E. LIGHT POLE DIMMING MOTION SENSOR SHALL BE MOUNTED AT 15'A.F.F. TO BOTTOM OF DEVICE. PROGRAM SENSOR SO THAT THE LIGHTING POWER REDUCES TO 50% WHEN MOTION IS NOT DETECTED.

## SHEET NOTES

1. PROVIDE AND INSTALL IN-GRADE CONCRETE PULLBOX CHRISTY #N36 WITH LID LABELED "PV".
2. CONTRACTOR SHALL SPLICE EXISTING WITH NEW CONDUCTORS USING A WEATHERPROOF CONNECTOR.
3. PROVIDE AND INSTALL:
   - (1) 3" CONDUIT WITH (2) 300 kcmil AL AND (4) 250 kcmil AL.
   - (1) 2½" CONDUIT WITH (2) 250 kcmil AL AND (4) 4/0 AWG AL.
   - (1) 2½" CONDUIT WITH (4) 300 kcmil AL.
4. CONTRACTOR SHALL FIELD VERIFY THAT NEW PV CONDUCTORS MATCH EXISTING IN TYPE AND QUANTITY.
5. PROVIDE AND INSTALL IN-GRADE CONCRETE PULLBOX CHRISTY #N16 WITH LID LABELED "LIGHTING".
6. CONTRACTOR SHALL INTERCEPT EXISTING LIGHTING CIRCUIT WITH NEW PULLBOX; FIELD VERIFY.
7. NOT NOT USED.
8. ¾"C., 2 #10 & 1 #10 GND. (LIGHTING).
9. PROVIDE AND INSTALL IN-GRADE CONCRETE PULLBOX CHRISTY #N16 WITH LID LABELED "EV".
10. NOTE NOT USED.
11. PROVIDE AND INSTALL IN-GRADE CONCRETE PULLBOX CHRISTY #N36 WITH LID LABELED "EV".
12. PROVIDE AND INSTALL 20"SQ x 12" DEEP NEMA 3R PULLCAN WITH SCREW COVER, HOFFMAN OR EQUAL.
13. (4) 2"C.O. FOR FUTURE EV CHARGING STATION. ROUTE CONDUITS TO PARKING LOT AND TERMINATE (1) 2"C.O. AT EACH "EV" IN-GRADE PULLBOX.
14. CONTRACTOR SHALL ROUTE (4) 2"C.O. TO ELECTRICAL ROOM #123. TERMINATE CONDUITS IN A NEW 20"SQ x 12" DEEP, NEMA 1 WITH SCREW COVER, HOFFMAN OR EQUAL. LABEL PULLCAN TO READ "EV CHARGING STATION".
15. CONTRACTOR SHALL CONNECT NEW LIGHT FIXTURE TO EXISTING ELECTRICAL CONNECTIONS PRESERVED DURING DEMOLITION WORK.
16. CONTRACTOR SHALL LOCATE LIGHT POLE FIXTURE 3 FEET AWAY FROM FACE OF PARKING LOT CURB.
17. FOR UNDERGROUND CONDUITS ROUTED NEAR THE BUILDING FOOTING, CONTRACTOR SHALL SEE STRUCTURAL DRAWINGS DETAIL 15/S5 "PIPE AND TRENCH PARALLEL TO FOOTING".

SCALE: 1"=30'-0"

NORTH


WESTON MILES
ARCHITECTS
17500 Depot Street, Suite #200
Morgan Hill, CA 95037
T 408 • 779 • 6686
• Architecture • Landscape •


REGISTERED ARCHITECT
JOHN L. WESTON
No. 4-7-95
STATE OF CALIFORNIA

NOT VALID WITHOUT WET SIGNATURE

REGISTERED PROFESSIONAL ENGINEER
DAVID HENDREY
No. 17-8-95
ELECTRICAL
STATE OF CALIFORNIA


AURUM CONSULTING ENGINEERS
MONTEREY BAY, INC.
Project No. 18217.00
50 Garden Court • Suite 210 • Monterey, CA 93940
T.831.646.3300 • F.831.646.3339 • www.aurumlb.com



These drawings are instruments of service and are the property of AURUM CONSULTING ENGINEERS MONTEREY BAY, INC. All designs and drawings are intended for the specified project and shall not be used otherwise without the expressed written permission of AURUM CONSULTING ENGINEERS MONTEREY BAY, INC.


REVISIONS

1 BACK CHECK 1/30/19

2 BACK CHECK 03/27/19

3

# ELECTRICAL SITE PLAN

## CENTENNIAL RECREATION CENTER EXPANSION PROJECT

CITY OF MORGAN HILL
171 W EDMUNDSON AVE, MORGAN HILL, CA 95037


These drawings are instruments of service and are the property of WESTON MILES ARCHITECTS, INC. All designs and drawings are intended for the specified project and shall not be used otherwise without the expressed written permission of WESTON MILES ARCHITECTS, INC.


Written dimensions on these drawings shall have precedence over scale measurements and contractor shall be responsible for all dimensions and conditions on the job and this office shall be notified of any variations from the dimensions and conditions shown by these drawings. Shop details shall be submitted to this office for approval before proceeding with fabrication.


© Copyrighted 2018


DATE: 7/5/2018

JOB NO: 18001

E2.1

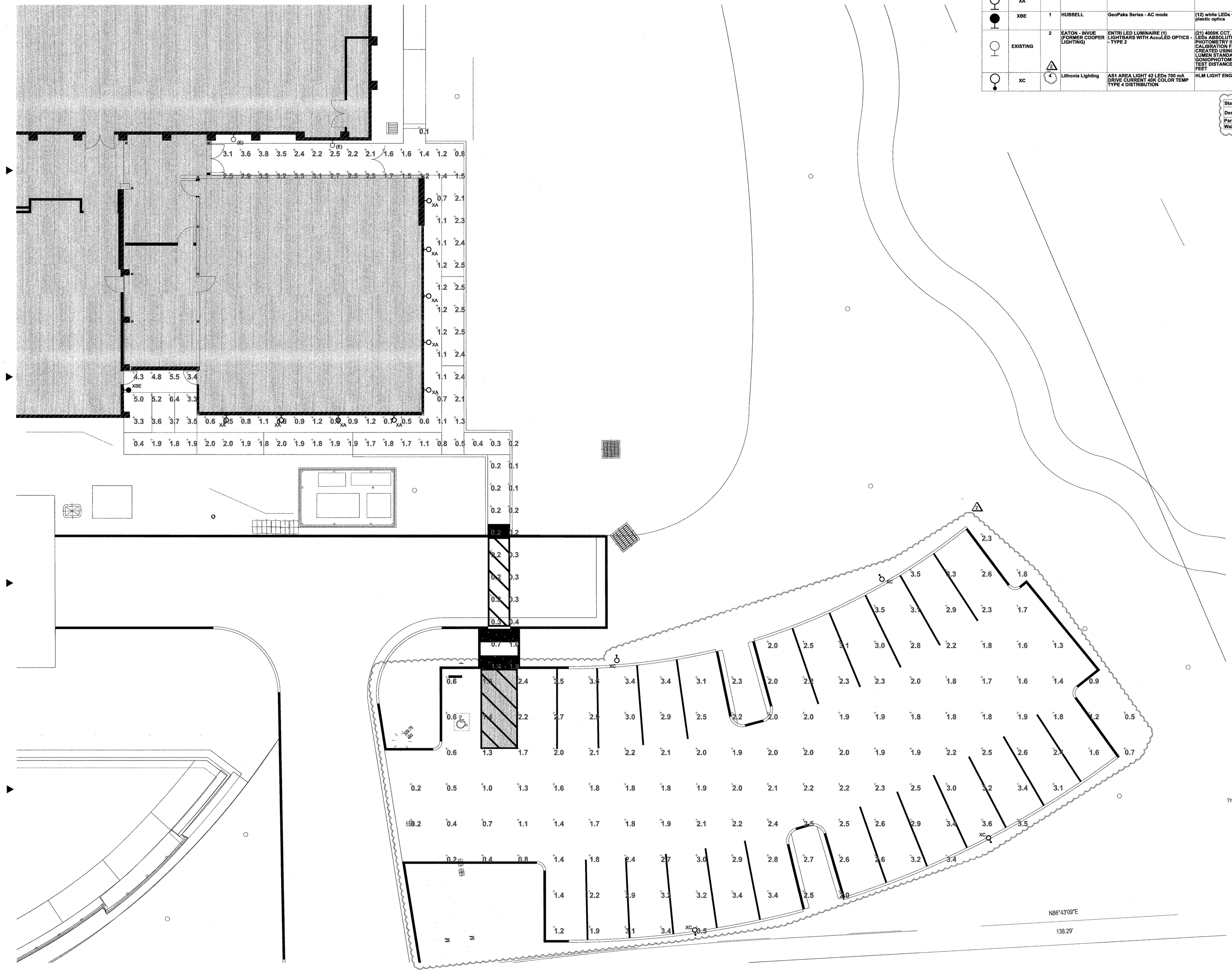


| Schedule | | | | | | | | |
|---|---|---|---|---|---|---|---|---|
| Symbol | Label | Quantity | Manufacturer | Description | Lamp | Lumens Per Lamp | Light Loss Factor | Wattage |
| | XA | 9 | TMS LIGHTING INC. | U101-15LED-F05 | CREE 15W LED, CCT 3000K | 163 | 0.89 | 17.227 |
| | XBE | 1 | HUBBELL | GeoPaks Series - AC mode | (12) white LEDs with clear plastic optics | 3096 | 0.89 | 27.98 |
| | EXISTING | 2 | EATON - INVUE (FORMER COOPER LIGHTING) | ENTRI LED LUMINAIRE (1) LIGHTBARS WITH AccuLED OPTICS - - TYPE 2 | (21) 4000K CCT, 70 CRI LEDs ABSOLUTE PHOTOMETRY IS BASED ON CALIBRATION FACTORS CREATED USING LAB LUMEN STANDARDS IN GONIOPHOTOMETER WITH TEST DISTANCE OF 28.75 FEET | 130 | 0.7 | 24.7 |
| | XC | 4 | Lithonia Lighting | AS1 AREA LIGHT 42 LEDs 700 mA DRIVE CURRENT 40K COLOR TEMP TYPE 4 DISTRIBUTION | HLM LIGHT ENGINE | 8475 | 0.89 | 97 |

| Statistics | | | | | | |
|---|---|---|---|---|---|---|
| Description | Symbol | Avg | Max | Min | Max/Min | Avg/Min |
| Parking Lot | + | 2.2 fc | 3.6 fc | 0.2 fc | 18.0:1 | 11.0:1 |
| Walkway | + | 1.7 fc | 6.4 fc | 0.1 fc | 64.0:1 | 17.0:1 |

JOB COPY
These plans must be kept on the job at all times.
CITY OF MORGAN HILL
BUILDING DIVISION

SCALE: 1/8"=1'-0"

NORTH


WESTON MILES
ARCHITECTS
17500 Depot Street, Suite #200
Morgan Hill, CA 95037
1 •408 • 779 • 6686
• Architecture • Landscape •


REGISTERED ARCHITECT
JOHN A. WESTON
No. 5-20-19
STATE OF CALIFORNIA

NOT VALID WITHOUT WET SIGNATURE


AURUM CONSULTING ENGINEERS MONTEREY BAY, INC.
Project No. 16217.00
80 Garden Court • Suite 210 • Monterey, CA 93940
T.831.648.5030 • F.831.648.3330 • www.acemb.com



These drawings are instruments of service and are the property of AURUM CONSULTING ENGINEERS MONTEREY BAY INC. All designs and other information on this drawings are for use on the specified project and shall not be used otherwise without the written consent and permission of WESTON MILES ARCHITECTS, INC.


Written dimensions on these drawings shall have precedence over scaled dimensions. Contractors shall verify and be responsible for all dimensions and conditions on the job and report any errors, omissions or conflicting dimensions and conditions shown on these drawings. Shop details shall be submitted to this office for approval before proceeding with fabrication.


© Copyrighted 2018


DATE: 7/5/2018

JOB NO: 18001

REVISIONS

1 BACK CHECK 1/30/19

2 BACK CHECK 03/27/19

3

# PHOTOMETRIC SITE PLAN

## CENTENNIAL RECREATION CENTER EXPANSION PROJECT

CITY OF MORGAN HILL
171 W EDMUNDSON AVE, MORGAN HILL, CA 95037

E2.1PH

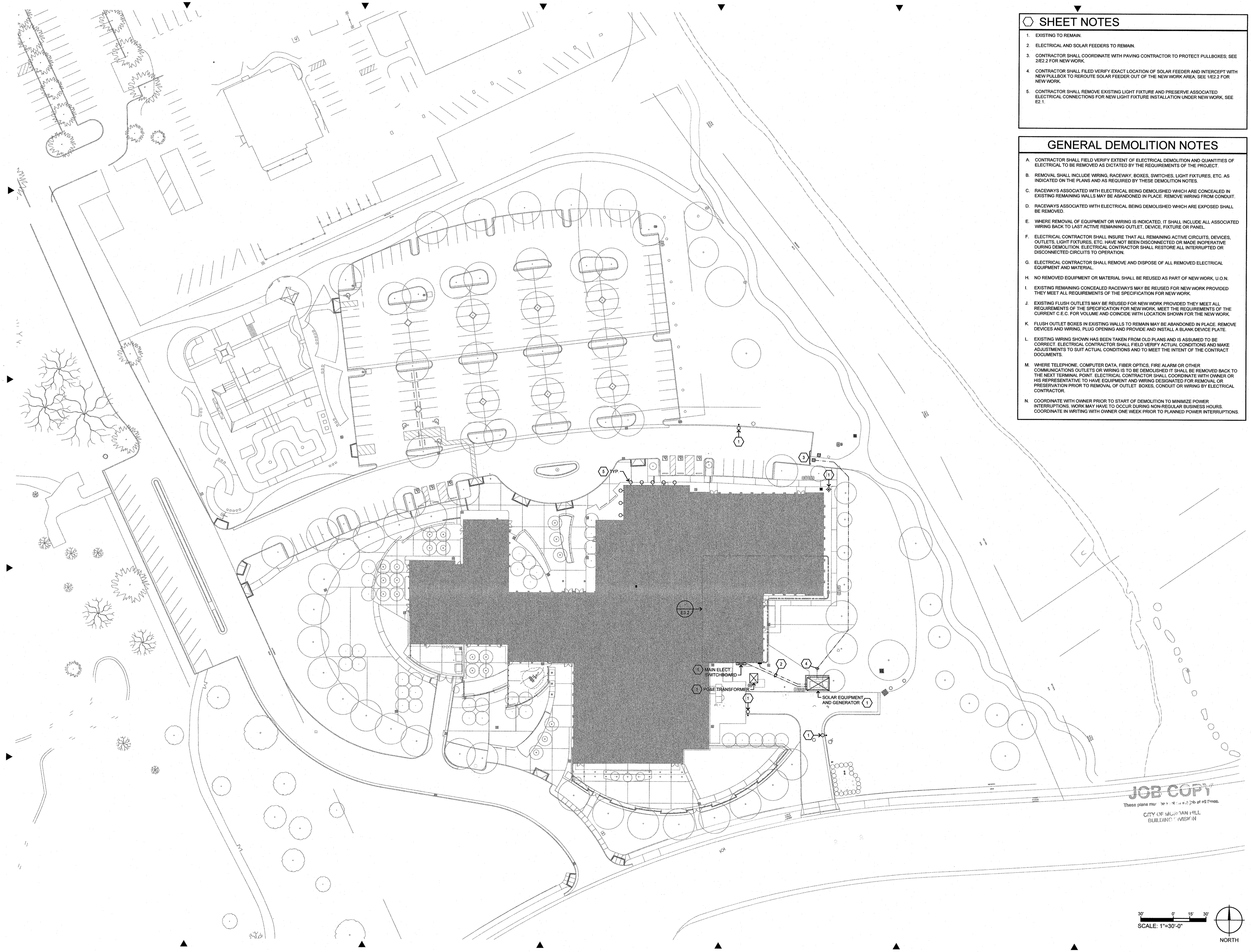


## SHEET NOTES

1. EXISTING TO REMAIN.
2. ELECTRICAL AND SOLAR FEEDERS TO REMAIN.
3. CONTRACTOR SHALL COORDINATE WITH PAVING CONTRACTOR TO PROTECT PULLBOXES; SEE 2/E2.2 FOR NEW WORK.
4. CONTRACTOR SHALL FILED VERIFY EXACT LOCATION OF SOLAR FEEDER AND INTERCEPT WITH NEW PULLBOX TO REROUTE SOLAR FEEDER OUT OF THE NEW WORK AREA; SEE 1/E2.2 FOR NEW WORK.
5. CONTRACTOR SHALL REMOVE EXISTING LIGHT FIXTURE AND PRESERVE ASSOCIATED ELECTRICAL CONNECTIONS FOR NEW LIGHT FIXTURE INSTALLATION UNDER NEW WORK, SEE E2.1.

## GENERAL DEMOLITION NOTES

A. CONTRACTOR SHALL FIELD VERIFY EXTENT OF ELECTRICAL DEMOLITION AND QUANTITIES OF ELECTRICAL TO BE REMOVED AS DICTATED BY THE REQUIREMENTS OF THE PROJECT.

B. REMOVAL SHALL INCLUDE WIRING, RACEWAY, BOXES, SWITCHES, LIGHT FIXTURES, ETC. AS INDICATED ON THE PLANS AND AS REQUIRED BY THESE DEMOLITION NOTES.

C. RACEWAYS ASSOCIATED WITH ELECTRICAL BEING DEMOLISHED WHICH ARE CONCEALED IN EXISTING REMAINING WALLS MAY BE ABANDONED IN PLACE. REMOVE WIRING FROM CONDUIT.

D. RACEWAYS ASSOCIATED WITH ELECTRICAL BEING DEMOLISHED WHICH ARE EXPOSED SHALL BE REMOVED.

E. WHERE REMOVAL OF EQUIPMENT OR WIRING IS INDICATED, IT SHALL INCLUDE ALL ASSOCIATED WIRING BACK TO LAST ACTIVE REMAINING OUTLET, DEVICE, FIXTURE OR PANEL.

F. ELECTRICAL CONTRACTOR SHALL INSURE THAT ALL REMAINING ACTIVE CIRCUITS, DEVICES, OUTLETS, LIGHT FIXTURES, ETC. HAVE NOT BEEN DISCONNECTED OR MADE INOPERATIVE DURING DEMOLITION. ELECTRICAL CONTRACTOR SHALL RESTORE ALL INTERRUPTED OR DISCONNECTED CIRCUITS TO OPERATION.

G. ELECTRICAL CONTRACTOR SHALL REMOVE AND DISPOSE OF ALL REMOVED ELECTRICAL EQUIPMENT AND MATERIAL.

H. NO REMOVED EQUIPMENT OR MATERIAL SHALL BE REUSED AS PART OF NEW WORK, U.O.N.

I. EXISTING REMAINING CONCEALED RACEWAYS MAY BE REUSED FOR NEW WORK PROVIDED THEY MEET ALL REQUIREMENTS OF THE SPECIFICATION FOR NEW WORK.

J. EXISTING FLUSH OUTLETS MAY BE REUSED FOR NEW WORK PROVIDED THEY MEET ALL REQUIREMENTS OF THE SPECIFICATION FOR NEW WORK, MEET THE REQUIREMENTS OF THE CURRENT C.E.C. FOR VOLUME AND COINCIDE WITH LOCATION SHOWN FOR THE NEW WORK.

K. FLUSH OUTLET BOXES IN EXISTING WALLS TO REMAIN MAY BE ABANDONED IN PLACE. REMOVE DEVICES AND WIRING, PLUG OPENING AND PROVIDE AND INSTALL A BLANK DEVICE PLATE.

L. EXISTING WIRING SHOWN HAS BEEN TAKEN FROM OLD PLANS AND IS ASSUMED TO BE CORRECT. ELECTRICAL CONTRACTOR SHALL FIELD VERIFY ACTUAL CONDITIONS AND MAKE ADJUSTMENTS TO SUIT ACTUAL CONDITIONS AND TO MEET THE INTENT OF THE CONTRACT DOCUMENTS.

M. WHERE TELEPHONE, COMPUTER DATA, FIBER OPTICS, FIRE ALARM OR OTHER COMMUNICATIONS OUTLETS OR WIRING IS TO BE DEMOLISHED IT SHALL BE REMOVED BACK TO THE NEXT TERMINAL POINT. ELECTRICAL CONTRACTOR SHALL COORDINATE WITH OWNER OR HIS REPRESENTATIVE TO HAVE EQUIPMENT AND WIRING DESIGNATED FOR REMOVAL OR PRESERVATION PRIOR TO REMOVAL OF OUTLET BOXES, CONDUIT OR WIRING BY ELECTRICAL CONTRACTOR.

N. COORDINATE WITH OWNER PRIOR TO START OF DEMOLITION TO MINIMIZE POWER INTERRUPTIONS, WORK MAY HAVE TO OCCUR DURING NON-REGULAR BUSINESS HOURS. COORDINATE IN WRITING WITH OWNER ONE WEEK PRIOR TO PLANNED POWER INTERRUPTIONS.


WESTON MILES
ARCHITECTS
17500 Depot Street, Suite #200
Morgan Hill, CA 95037
1 •408 • 779 • 6686
• Architecture • Landscape •


LICENSED ARCHITECT
JEFFREY L. WESTON
STATE OF CALIFORNIA

NOT VALID WITHOUT WET SIGNATURE

MELISSA SANDRES
ELECTRICAL
STATE OF CALIFORNIA


AURUM CONSULTING ENGINEERS MONTEREY BAY, INC.
Project No. 16217.00
60 Garden Court • Suite 210 • Monterey, CA 93940
T 831.646.3300 • F 831.646.3336 • www.aurmb.com



These drawings are instruments of service and are the property of AURUM CONSULTING ENGINEERS MONTEREY BAY, INC. All designs and other information on this drawings are for use on the specified project and shall not be used otherwise without the written consent and permission of AURUM CONSULTING ENGINEERS MONTEREY BAY, INC.


REVISIONS

1 BACK CHECK 1/30/19

2

3

# ELECTRICAL DEMOLITION SITE PLAN

## CENTENNIAL RECREATION CENTER EXPANSION PROJECT

CITY OF MORGAN HILL
171 W EDMUNDSON AVE, MORGAN HILL, CA 95037


These drawings are instruments of service and are the property of WESTON MILES ARCHITECTS, INC. All designs and other information on this drawings are for use on the specified project and shall not be used otherwise without the written consent and permission of WESTON MILES ARCHITECTS, INC.

Written dimensions on these drawings shall have precedence over scaled dimensions. Contractors shall verify and be responsible for all dimensions and conditions on the job and report any errors, omissions or conflicting dimensions and conditions shown by these drawings. Shop details shall be submitted to this office for approval before proceeding with fabrication.

© Copyrighted 2018


DATE: 7/5/2018

JOB NO: 18001

E3.1

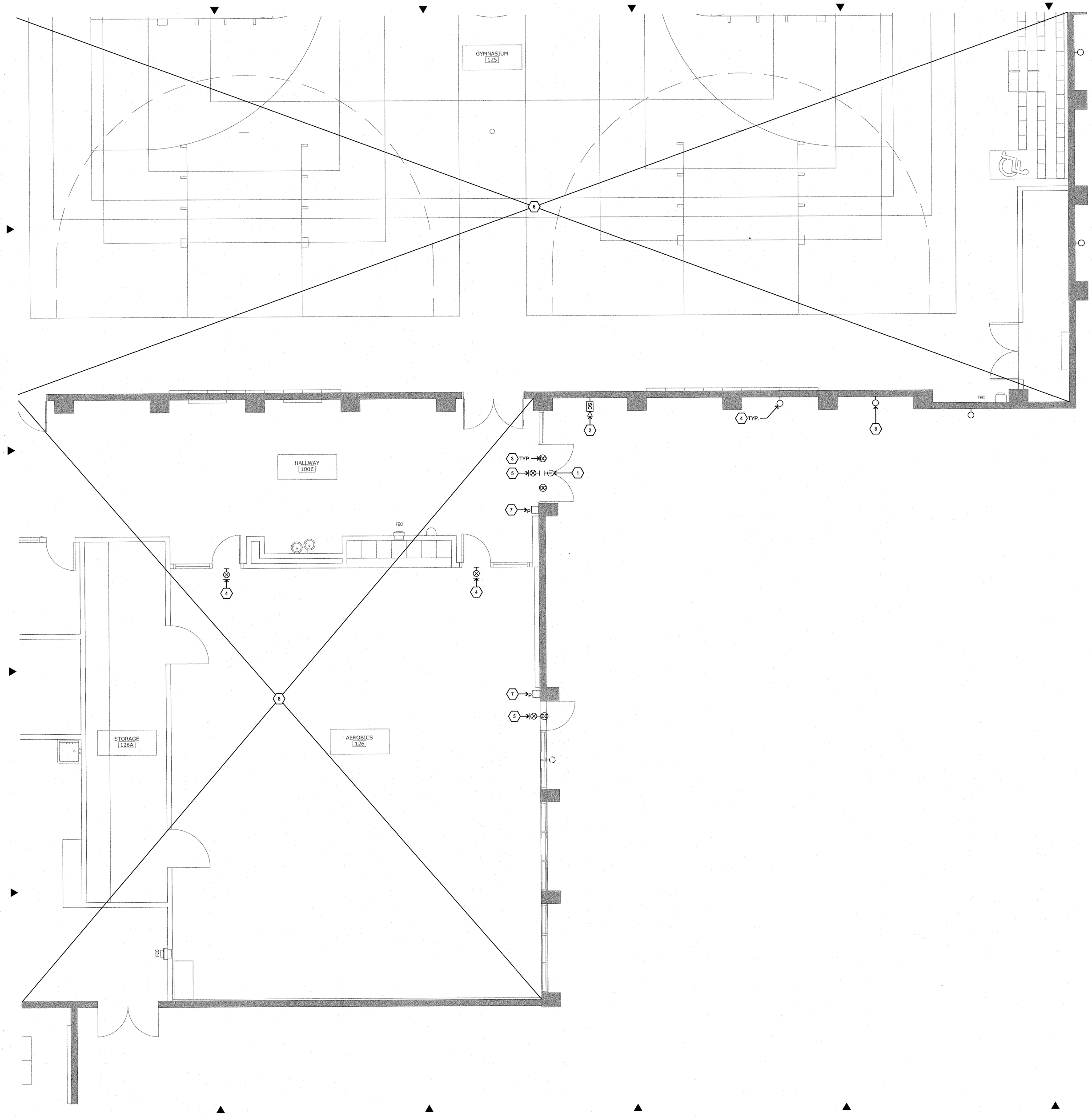


## SHEET NOTES

1. CONTRACTOR SHALL DEMOLISH EXISTING LIGHT FIXTURE PER GENERAL DEMOLITION NOTES ON SHEET E3.1.
2. CONTRACTOR SHALL REMOVE AND SALVAGE SECURITY CAMERA FOR REINSTALLATION AT NEW LOCATION UNDER NEW WORK; SEE SHEET E4.1.
3. CONTRACTOR SHALL REMOVE AND SALVAGE SECURITY DOOR CONTACTS AND ASSOCIATED ELECTRICAL CONNECTIONS FOR RECONNECTION AT NEW LOCATION UNDER NEW WORK; SEE SHEET E4.1.
4. UNLESS OTHERWISE NOTED, EXISTING TO REMAIN.
5. CONTRACTOR SHALL REMOVE AND SALVAGE EXIT SIGN AND ASSOCIATED ELECTRICAL CONNECTIONS FOR RECONNECTION AT NEW LOCATION UNDER NEW WORK; SEE SHEET E5.1.
6. UNLESS OTHERWISE NOTED, NO ELECTRICAL DEMOLITION WORK IN THIS AREA.
7. CONTRACTOR SHALL REMOVE AND SALVAGE PULL STATION AND ASSOCIATED ELECTRICAL CONNECTION FOR RECONNECTION AT NEW LOCATION UNDER NEW WORK; SEE SHEET E4.1.
8. DEMOLISH FLOODLIGHT PER GENERAL DEMOLITION NOTES ON SHEET E3.1.

JOB COPY
These plans must be kept on the job at all times.
CITY OF MORGAN HILL
BUILDING DIVISION

SCALE: 1/4"=1'-0"

NORTH

WESTON MILES
ARCHITECTS
17500 Depot Street, Suite #200
Morgan Hill, CA 95037
T. 408 • 779 • 6686
• Architecture • Landscape •

NOT VALID WITHOUT WET SIGNATURE

AURUM CONSULTING ENGINEERS MONTEREY BAY, INC.
Project No. 18217-00
99 Garden Court • Suite 210 • Monterey, CA 93940
T 831.649.5330 • F 831.649.3358 • www.acemb.com

These drawings are instruments of service and are the property of AURUM CONSULTING ENGINEERS MONTEREY BAY, INC. All designs and other information in the drawings are to be used for the specified project and shall not be used otherwise without the written permission of AURUM CONSULTING ENGINEERS MONTEREY BAY, INC.

REVISIONS

1 BACK CHECK 1/30/19

2

3

# ELECTRICAL DEMOLITION PLAN

## CENTENNIAL RECREATION CENTER EXPANSION PROJECT

CITY OF MORGAN HILL
171 W EDMUNDSON AVE, MORGAN HILL, CA 95037

These drawings are instruments of service and are the property of WESTON MILES ARCHITECTS, INC. All designs and other information on the drawings are for use on the specified project and shall not be used otherwise without the written permission of WESTON MILES ARCHITECTS, INC.

Written dimensions on these drawings shall have precedence over scaled dimensions. Contractors shall verify and be responsible for all dimensions and conditions on the job and report any discrepancies to the architect before any work commences and conditions shown by these drawings. Shop details shall be submitted to this office for approval before proceeding with fabrication.

© Copyrighted 2018

DATE: 7/5/2018

JOB NO: 18001

E3.2

## BRANCH CIRCUIT CONDUCTOR SIZING TABLE

| CIRCUIT AMPACITY/VOLTAGE | CIRCUIT LENGTH | REQUIREMENT |
|---|---|---|
| 20/120 | 56'-90' | ½" C., 2 #10 & 1 #10 GND. |
| 20/120 | 91'-140' | ¾" C., 2 #8 & 1 #10 GND. |
| 20/277 | 131'-205' | ½" C., 2 #10 & 1 #10 GND. |
| 20/277 | 206'-330' | ½" C., 2 #8 & 1 #10 GND. |

NOTE:
CONTRACTOR SHALL SIZE BRANCH CIRCUIT CONDUCTORS PER THE TABLE ABOVE AS DETERMINED BY THE CIRCUIT CONDUCTOR LENGTH, U.O.N. CONTRACTOR SHALL SPLICE TO #12 AWG WITHIN TERMINATION BOX FOR DEVICE CONNECTION IF NECESSARY.

## SHEET NOTES

1. UNLESS OTHERWISE NOTED, NO NEW ELECTRICAL WORK IN THIS AREA.
2. LOCATE FOR WIRELESS ACCESS POINT.
3. PROVIDE AND INSTALL VARIABLE SPEED CONTROL "ICFC10", 120V. COORDINATE EXACT LOCATION WITH ARCHITECT. PROVIDE AND INSTALL ¾"CONDUIT WITH WIRING FROM CONTROLLER TO CEILING FAN.
4. CONTRACTOR SHALL COORDINATE WITH ARCHITECTURAL ELEVATIONS FOR MOUNTING HEIGHT, SEE 8/A7.1.
5. PROVIDE AND INSTALL WEATHERPROOF "IN-USE" METALLIC COVER, HOFFMAN OR EQUAL. GROUND AND BOND COVER PER NEC.
6. CONTRACTOR SHALL PROVIDE AND INSTALL STEEL SURFACE WIREMOLD RACEWAY, LEGRAND V2400D, 2 CHANNELS. ROUTE DATA CABLES IN 2/3 CHANNEL. INSTALL PER MANUFACTURER'S INSTALLATION INSTRUCTIONS AND PROVIDE AND INSTALL NECESSARY MOUNTING HARDWARE, ELBOWS, FITTERS ETC. FOR COMPLETE INSTALL.
7. STUB 1 ¼" CONDUIT FOR DATA CABLING ABOVE METAL ROOF DECK.
8. UNLESS OTHERWISE NOTED, CONTRACTOR SHALL CONCEAL ALL ELECTRICAL CONDUITS IN THIS AREA.

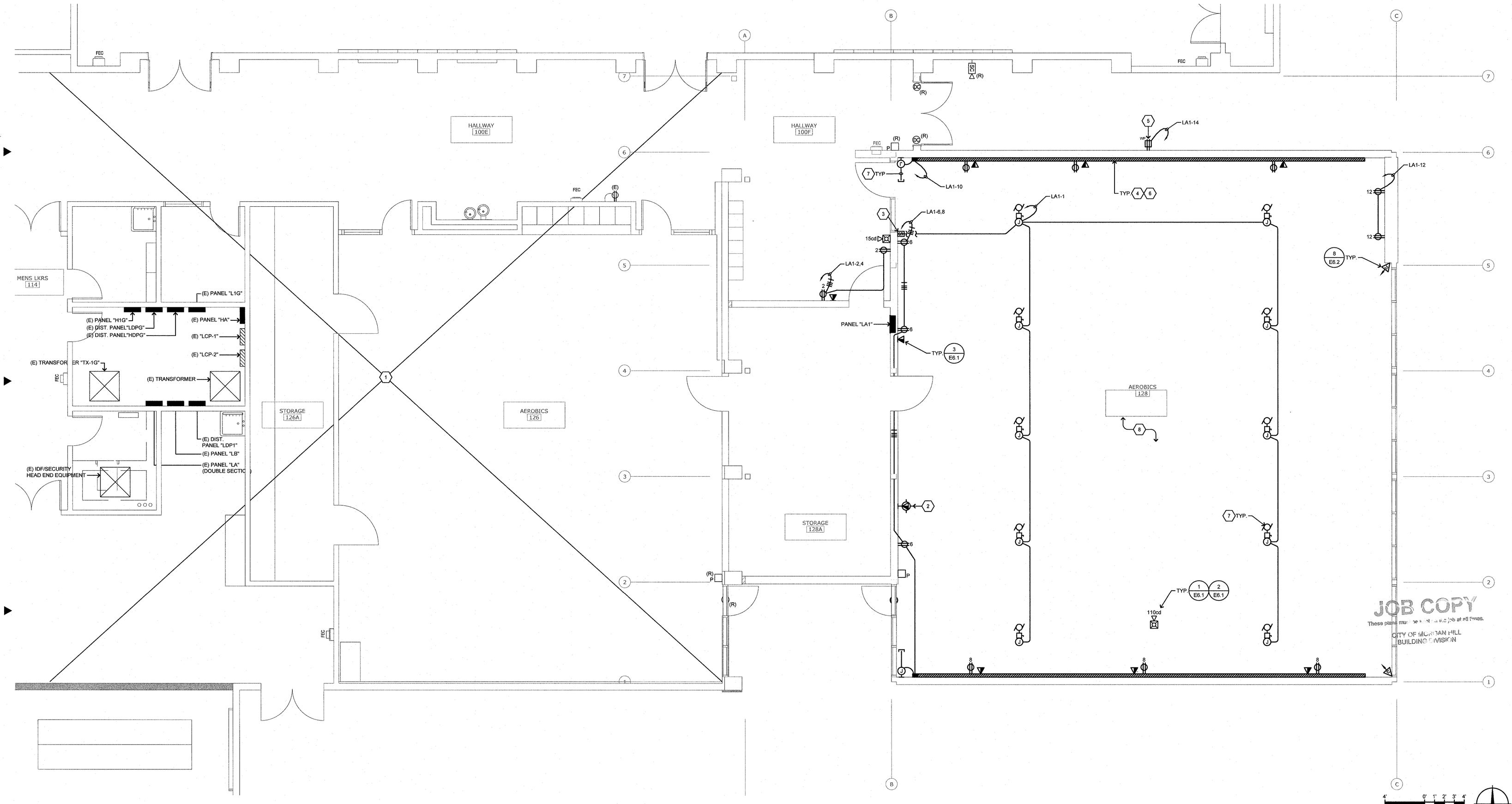



WESTON MILES
ARCHITECTS
17500 Depot Street, Suite #200
Morgan Hill, CA 95037
1 •408 • 779 • 6686
• Architecture • Landscape •


NOT VALID WITHOUT WET SIGNATURE


AURUM CONSULTING ENGINEERS MONTEREY BAY, INC.
Project No. 18217.00
80 Garden Court • Suite 210 • Monterey, CA 93940
T 831.646.3364 • F 831.646.3339 • www.aceemb.com



These drawings are instruments of service and are the property of AURUM CONSULTING ENGINEERS MONTEREY BAY, INC. All designs and other information on the drawings are for use on the specified project only and shall not be reused or reproduced without the expressed written permission of AURUM CONSULTING ENGINEERS MONTEREY BAY, INC.


REVISIONS

1 BACK CHECK 1/30/19

2

3

# POWER & SYSTEMS PLAN

## CENTENNIAL RECREATION CENTER EXPANSION PROJECT

CITY OF MORGAN HILL
171 W EDMUNDSON AVE, MORGAN HILL, CA 95037


These drawings are instruments of service and are the property of WESTON MILES ARCHITECTS, INC. All designs and other information on the drawings are for use on the specified project only and shall not be reused or reproduced without the expressed written permission of WESTON MILES ARCHITECTS, INC.


Written dimensions on these drawings shall have precedence over scaled dimensions. Contractors shall verify and be responsible for all dimensions and conditions on the job and this office shall be notified of any variations from the dimensions and conditions shown by these drawings. Shop details must be submitted to this office for approval before proceeding with fabrication.


© Copyrighted 2018


DATE: 7/5/2018

JOB NO: 18001

E4.1

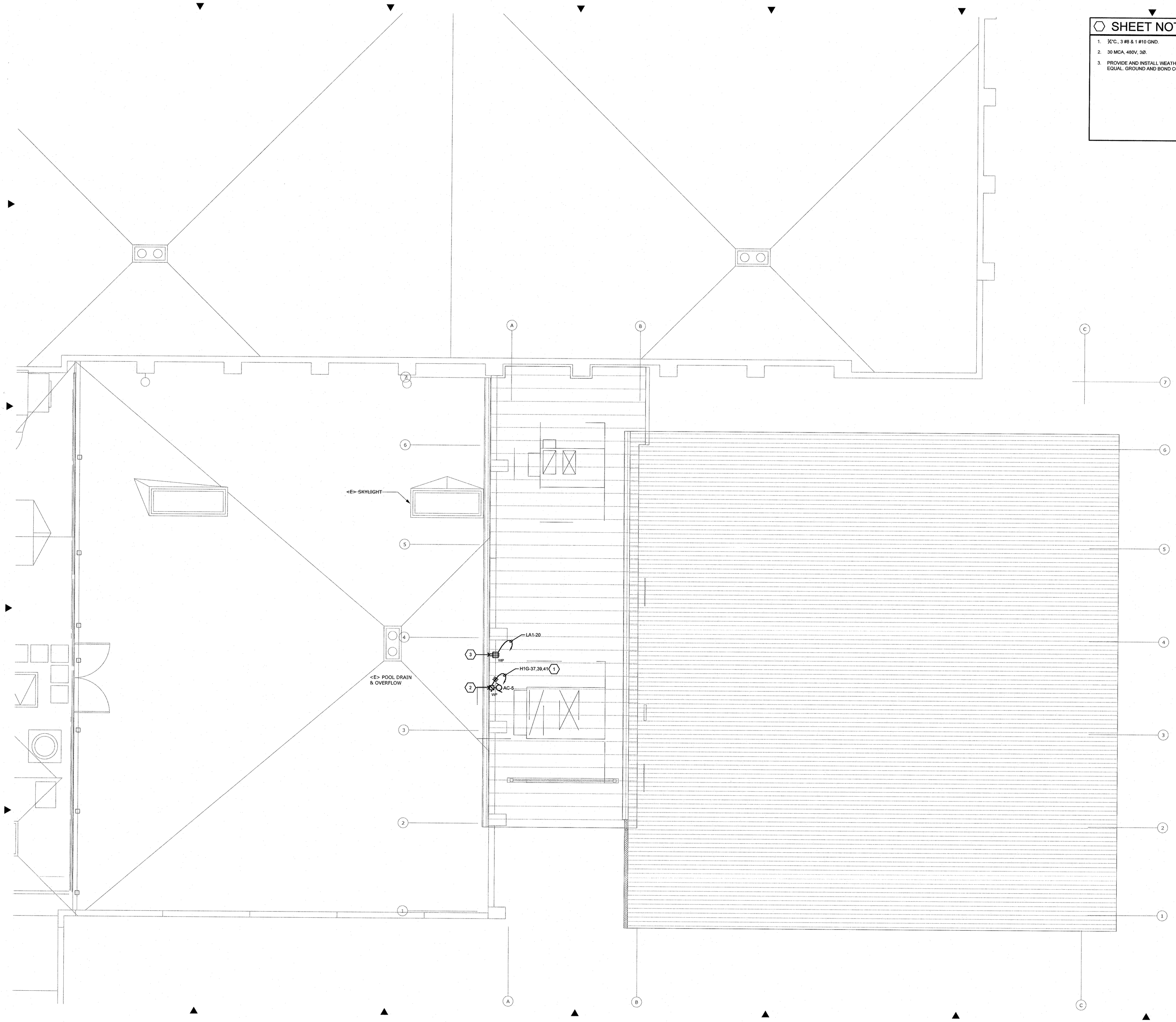


## SHEET NOTES

1. ¾"C., 3 #8 & 1 #10 GND.
2. 30 MCA, 480V, 3Ø.
3. PROVIDE AND INSTALL WEATHERPROOF METALLIC "IN-USE" COVER, TAYMAC OR EQUAL. GROUND AND BOND COVER PER NEC.

JOB COPY
These plans may not be used for construction job at all times.
CITY OF MORGAN HILL
BUILDING DIVISION

SCALE: 1/4"=1'-0"

NORTH


WESTON MILES
ARCHITECTS
17500 Depot Street, Suite #200
Morgan Hill, CA 95037
1 •408 • 779 • 6686
• Architecture • Landscape •


REGISTERED ARCHITECT
ROBERT L. WESTON
STATE OF CALIFORNIA
9-24-18

NOT VALID WITHOUT WET SIGNATURE

REGISTERED PROFESSIONAL ENGINEER
WILLIAM ANDREW FRANK
ELECTRICAL
STATE OF CALIFORNIA


AURUM CONSULTING ENGINEERS
MONTEREY BAY, INC.
Project No. 18017.00
80 Garden Court • Suite 210 • Monterey, CA 93940
T 831.646.3330 • F 831.646.3350 • www.aurumb.com



These drawings are instruments of service and are the property of AURUM CONSULTING ENGINEERS MONTEREY BAY, INC. All designs and other information in the drawings are the property of AURUM CONSULTING ENGINEERS MONTEREY BAY, INC. and shall not be used for other work and are not to be loaned, copied or disclosed without written consent of AURUM CONSULTING ENGINEERS MONTEREY BAY, INC.


REVISIONS

1 BACK CHECK 1/30/19

2

3

# POWER PLAN - ROOF

## CENTENNIAL RECREATION CENTER EXPANSION PROJECT

CITY OF MORGAN HILL
171 W EDMUNDSON AVE, MORGAN HILL, CA 95037


These drawings are instruments of service and are the property of WESTON MILES ARCHITECTS, INC. All designs and other information in the drawings are the property of WESTON MILES ARCHITECTS, INC. and are not to be used for other work and are not to be loaned, copied or disclosed without written consent of WESTON MILES ARCHITECTS, INC.

Written dimensions on these drawings shall have precedence over scaled dimensions. Contractors shall verify and be responsible for all dimensions and conditions on the job and this office shall be notified of any variations from the dimensions and conditions shown by these drawings. Shop drawings must be submitted to this office for approval before proceeding with fabrication.

© Copyrighted 2018


DATE: 7/5/2018

JOB NO: 18001

E4.2

GENERAL NOTES:

A. SEE SHEET E6.2 FOR DRC LIGHTING CONTROL DETAILS.

B. FOR ALL LIGHT FIXTURES, CONTRACTOR SHALL REFER TO ARCHITECTURAL ELEVATION DRAWINGS FOR MOUNTING HEIGHT AND EXACT LOCATION.

C. ALL TAGS/LABELEDS ON CONDUITS, ELECTRICAL DEVICES AND LIGHT FIXTURES SHALL BE REMOVED.

D. ALL CONDUITS SHALL BE CONCEALED WHERE POSSIBLE. CUT AND PATCH EXISTING WALLS WHERE NECESSARY. WHERE IT IS NECESSARY TO CUT OR BORE EXISTING STRUCTURAL WALLS FOR NEW ELECTRICAL WORK OBTAIN PERMISSION FROM THE ARCHITECT PRIOR TO STARTING WORK. REUSE EXISTING CONDUIT WHERE POSSIBLE.

## BRANCH CIRCUIT CONDUCTOR SIZING TABLE

| CIRCUIT AMPACITY/VOLTAGE | CIRCUIT LENGTH | REQUIREMENT |
|---|---|---|
| 20/120 | 56'-90' | ½" C., 2 #10 & 1 #10 GND. |
| 20/120 | 91'-140' | ½" C., 2 #8 & 1 #10 GND. |
| 20/277 | 131'-205' | ½" C., 2 #10 & 1 #10 GND. |
| 20/277 | 206'-330' | ½" C., 2 #8 & 1 #10 GND. |

NOTE:
CONTRACTOR SHALL SIZE BRANCH CIRCUIT CONDUCTORS PER THE TABLE ABOVE AS DETERMINED BY THE CIRCUIT CONDUCTOR LENGTH, U.O.N. CONTRACTOR SHALL SPLICE TO #12 AWG WITHIN TERMINATION BOX FOR DEVICE CONNECTION IF NECESSARY.

## SHEET NOTES

1. UNLESS OTHERWISE NOTED, NO NEW ELECTRICAL WORK IN THIS AREA.
2. CONTROL CIRCUIT "HA-14" VIA "LCP2-48" AND CONTROL CIRCUIT "HA-16" VIA "LCP2-47".
3. CONNECT TO AN UNSWITCHED HOT.
4. CONNECT EMERGENCY BATTERY BACK-UP TO AN UNSWITCHED HOT AND ALLOW FOR NORMAL SWITCHING DURING NORMAL OPERATION.
5. CONNECT TO NEAREST UNSWITCHED HOT IN SAME SPACE.
6. CONTRACTOR SHALL BRING AN UNSWITCHED HOT FROM SAME 277V CIRCUIT OR SOURCE AND CONNECT TO LIGHT FIXTURE WITH EMERGENCY BATTERY BACK-UP; FIELD VERIFY.
7. CONNECT TO EXISTING LIGHTING CIRCUIT "HA-1" AND CONNECT VIA "LCP1-4".
8. CONNECT TO NEAREST UNSWITCHED LIGHTING CIRCUIT.
9. CONNECT VIA "LCP1" SPARE. PROVIDE AND INSTALL AN OVERRIDE LOW VOLTAGE SWITCH IN THE RECEPTION #101 AREA AND CONNECT TO "LCP1" VIA ½" CONDUIT TO CONTROL NEW LIGHTS IN NEW STUDIO.
10. MOUNT AT 14'- 6" A.F.F. TO BOTTOM OF FIXTURE; FIELD VERIFY CABLE LENGTH.
11. MOUNT AT 10' A.F.F. TO BOTTOM OF FIXTURE; FIELD VERIFY CABLE LENGTH.
12. CONTRACTOR SHALL ROUTE DRC ROOM CONTROLLER TO NEAREST ACCESSIBLE CEILING SPACE. PROVIDE AND INSTALL ACCESS PANEL AS NECESSARY TO FREELY ACCESS THE DEVICES.
13. ELECTRICAL CONDUITS IN THIS AREA SHALL BE CONCEALED AND ROUTED ABOVE METAL ROOF DECK.
14. ALL CONDUITS FOR EXTERIOR LIGHT FIXTURES SHALL BE ROUTED WITHIN THE EXTERIOR PERIMETER WALL.
15. ELECTRICAL CONDUITS IN THIS AREA SHALL BE CONCEALED AND ROUTED ABOVE CORRUGATED METAL CEILING OR GYPBOARD CEILING.
16. CONTRACTOR SHALL REPLACE EXISTING LAMPS WIT NEW AND COORDINATE WITH OWNER FOR RESCHEDULING THE TIMECLOCK LIGHTING OPERATION HOURS TO PROVIDE LIGHTING IN THE EXTERIOR [illegible] AGE AS NECESSARY.

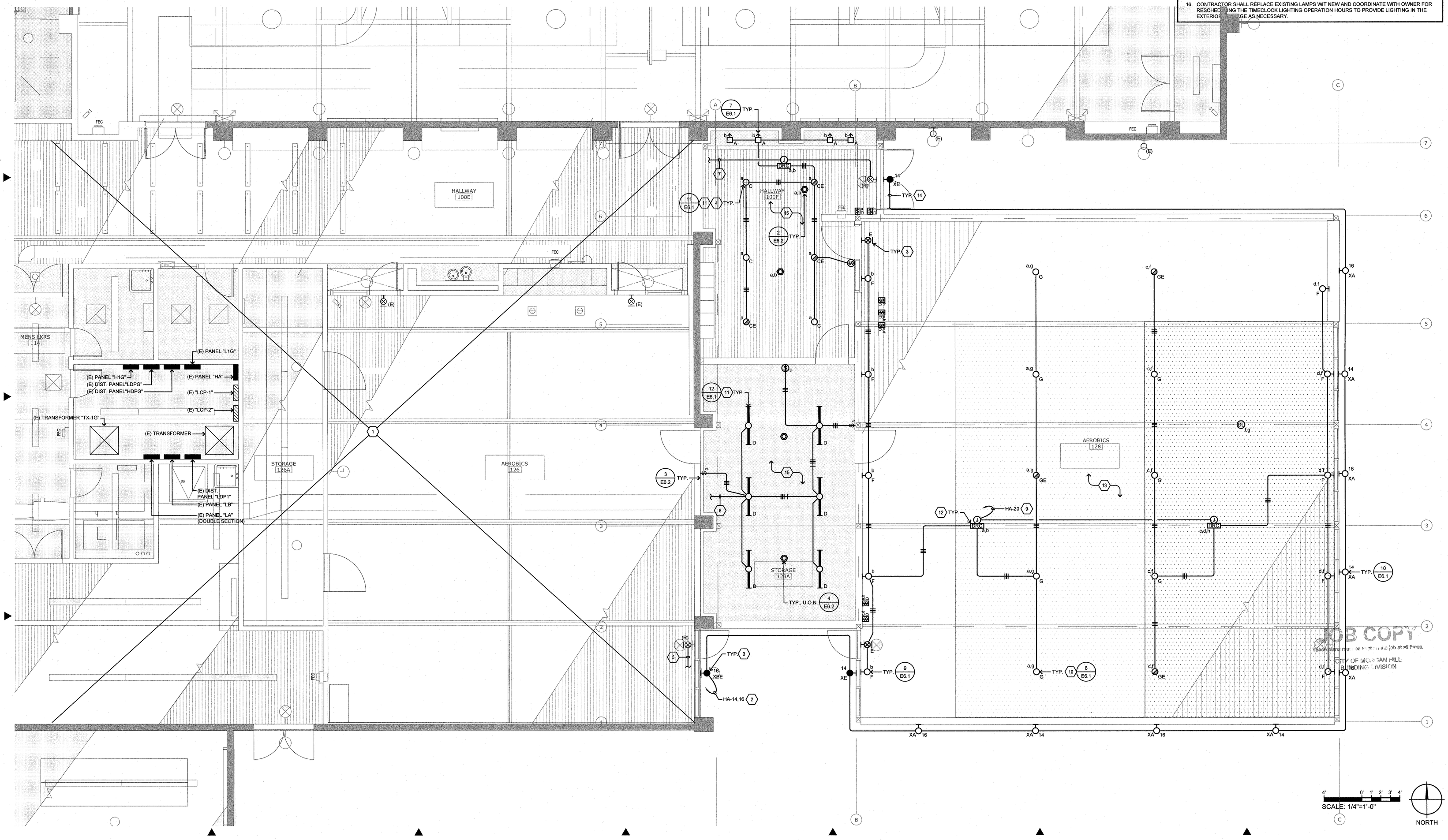


JOB COPY
These plans must be on the job at all times.
CITY OF MORGAN HILL
BUILDING DIVISION

WESTON MILES
ARCHITECTS
17500 Depot Street, Suite #200
Morgan Hill, CA 95037
1 •408 • 779 • 6686
• Architecture • Landscape •

REGISTERED ARCHITECT
STEVEN L. WESTON
No. 9-2-2-6
9-30-19
STATE OF CALIFORNIA

NOT VALID WITHOUT WET SIGNATURE

REGISTERED PROFESSIONAL ENGINEER
MICHAEL J. GIBBS
STATE OF CALIFORNIA

AURUM CONSULTING ENGINEERS MONTEREY BAY, INC.
Project No. 18217.02
50 Garden Court • Suite 210 • Monterey, CA 93940
T 831 646 3300 • F 831 646 3309 • www.acemb.com

These drawings are instruments of service and are the property of AURUM CONSULTING ENGINEERS MONTEREY BAY INC. All designs and other information, in the drawings and specifications, are the property of AURUM CONSULTING ENGINEERS MONTEREY BAY, INC. and shall not be used otherwise without the expressed written permission of AURUM CONSULTING ENGINEERS MONTEREY BAY, INC.

REVISIONS

1 BACK CHECK 1/30/19

2

3

# LIGHTING PLAN

## CENTENNIAL RECREATION CENTER EXPANSION PROJECT

CITY OF MORGAN HILL
171 W EDMUNDSON AVE, MORGAN HILL, CA 95037

These drawings are instruments of service and are the property of WESTON MILES ARCHITECTS, INC. All designs and other information, in the drawings and specifications, are for use on the specified project and shall not be used otherwise without the expressed written permission of WESTON MILES ARCHITECTS, INC.

Written dimensions on these drawings shall have precedence over scaled dimensions. Contractors shall verify and be responsible for all dimensions and conditions on the job and this office shall be notified of any variations from the dimensions and conditions shown by these drawings. Shop details shall be submitted to this office for approval before proceeding with fabrication.

© Copyrighted 2018

DATE: 7/5/2018

JOB NO: 18001

E5.1

DETAIL NOTES

1. |Q1|W|A4|S" x 20 THREADED BOLT, LENGTH AS REQUIRED.
2. 1/4" x 20 THREADED CABLE RETAINER BY MFGR.
3. SLIP RING AND SET SCREW BY MFGR.
4. 3/32" DIA. AIRCRAFT SAFETY CABLE BY MFGR., SECURE TO FIXT. SEE LIGHTING PLANS FOR QUANTITY AND LOCATION.
5. CANOPY BY MFGR.
6. METAL DECK CEILING.

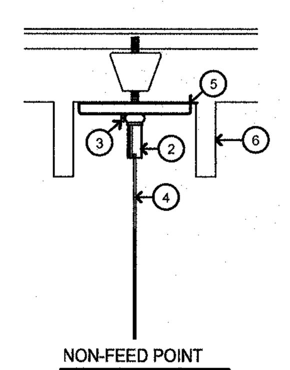


## 11 PENDANT MOUNTING DETAIL

NO SCALE

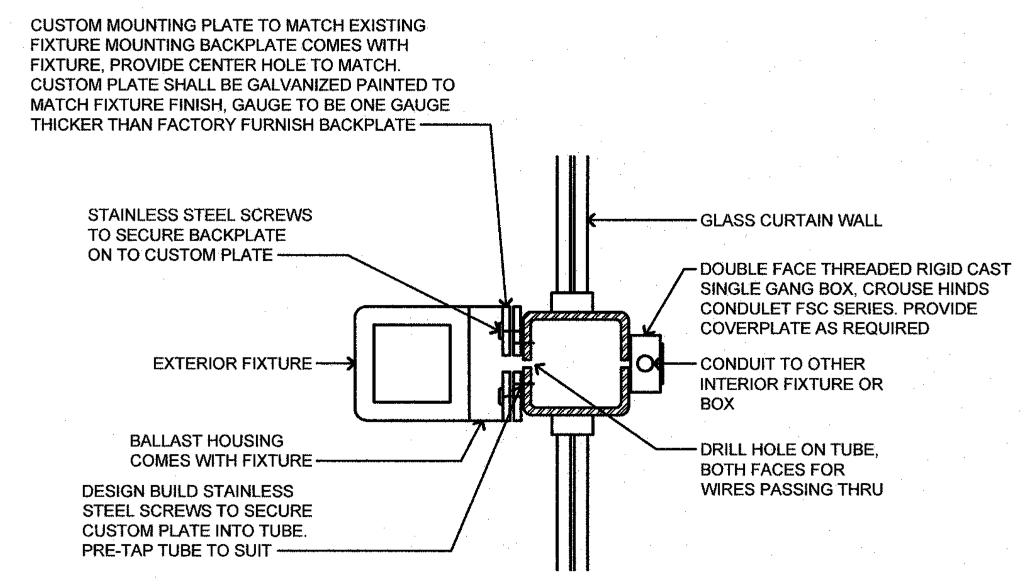


## 10 EXTERIOR FIXTURE MOUNTING DETAIL

NO SCALE

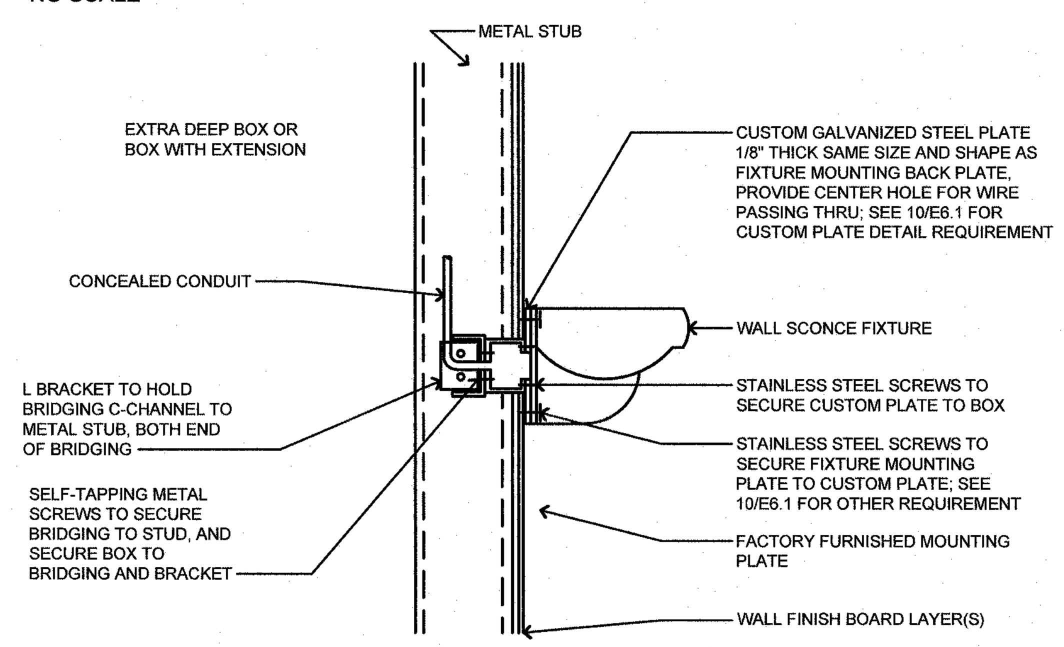


## 9 WALL SCONCE MOUNTING DETAIL

NO SCALE

DETAIL NOTES

1. CEILING
2. PROVIDE NECESSARY SUPPORTS FOR COMPLETE INSTALLATION
3. LIGHT FIXTURE BODY
4. CHAIN SUSPENSION
5. SEISMIC BRACE

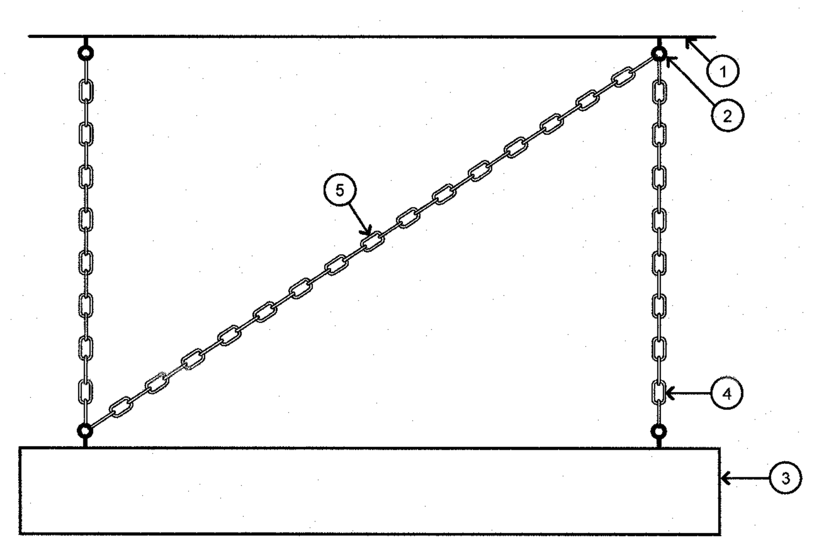

NOTE:
SEISMIC BRACE REQUIRED WHERE FIXTURE CAN NOT SWING 45° WITHOUT CONTACTING AN OBSTRUCTION. PLACEMENT OF BRACE SHALL BE DETERMINED ON SITE AND SHALL BE INSTALLED ACCORDING TO SITE CONDITIONS TO PREVENT FIXTURE FROM CONTACTING AN OBSTRUCTION. PER FOOT NOTE 25 OF TABLE 16A-O OF 2001 SBC.

## 12 CHAIN HUNG LIGHTING FIXTURE

NO SCALE

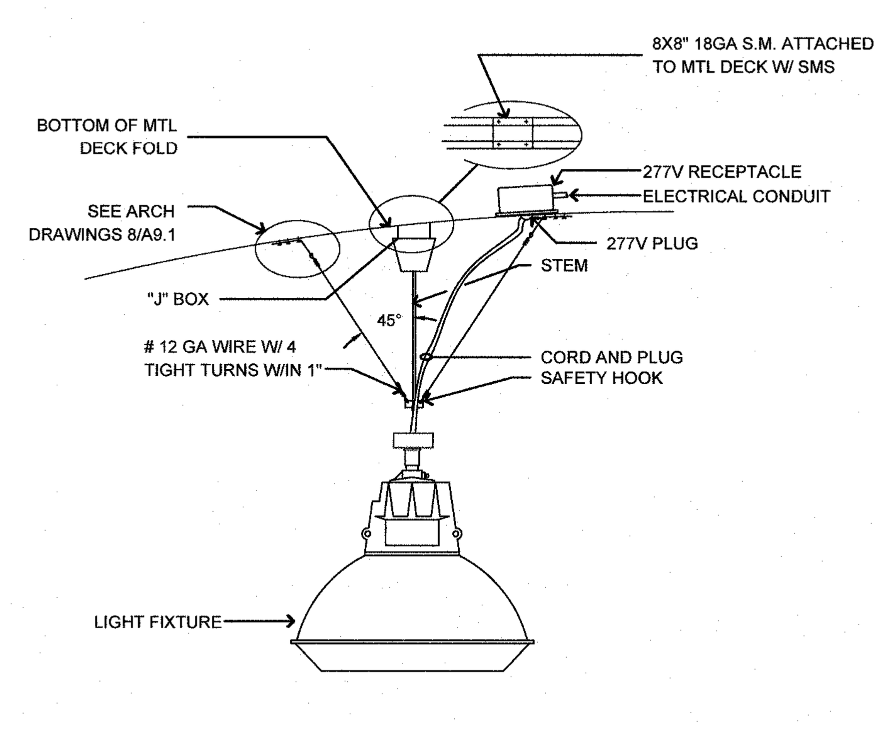


## 8 PENDANT MOUNTING ON METAL DECK

NO SCALE

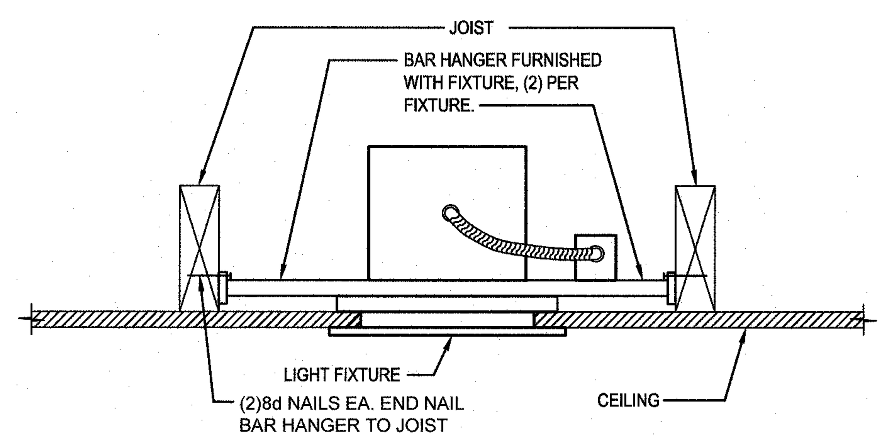


RECESSED FIXTURE IN GYP. BOARD CEILING

## 7 FIXTURE MOUNTING DETAIL

NO SCALE

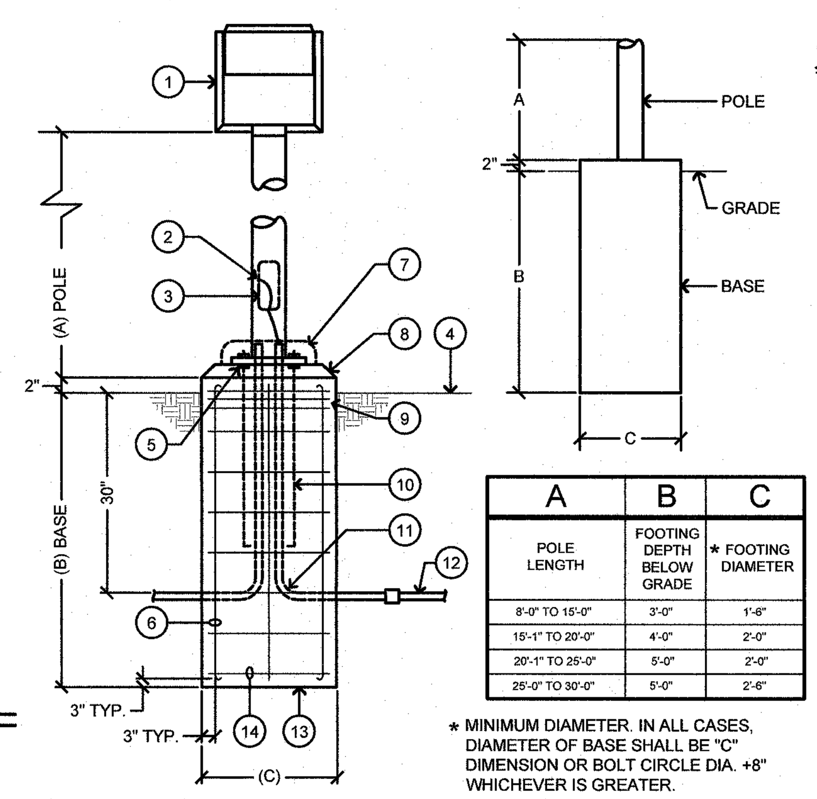


| A | B | C |
|---|---|---|
| POLE LENGTH | FOOTING DEPTH BELOW GRADE | * FOOTING DIAMETER |
| 8'-0" TO 15'-0" | 3'-0" | 1'-6" |
| 15'-1" TO 20'-0" | 4'-0" | 2'-0" |
| 20'-1" TO 25'-0" | 5'-0" | 2'-0" |
| 25'-0" TO 30'-0" | 5'-0" | 2'-6" |

* MINIMUM DIAMETER. IN ALL CASES, DIAMETER OF BASE SHALL BE "C" DIMENSION OR BOLT CIRCLE DIA. +8" WHICHEVER IS GREATER.

DETAIL NOTES:

1. LIGHT FIXTURE HEAD
2. GROUND BOND LUG IN POLE
3. HANDHOLE WITH GASKET COVER
4. FINISHED GRADE
5. LEVEL NUTS
6. 6 #4 VERTICAL BARS EQUALLY SPACED, HOOK ENDS
7. ANCHOR BOLTS AND BASE COVER
8. GROUT FILLED WITH 1" x 45° BEVEL AT EDGE
9. 3 #3 TIES IN UPPER 5" OF BASE
10. ANCHOR BOLT; QUANTITY & SIZE PER POLE MFGR. FURNISHED WITH POLE. ANCHOR BOLTS SHALL BE WITHIN VERTICAL REBAR CAGE
11. PVC ELBOW AND RISER
12. BRANCH CIRCUIT PVC CONDUIT
13. 3000 P.S.I. AT 28 DAYS CONCRETE FOOTING
14. #2 HORIZONTAL TIES AT 9" O.C. LAP END

## 6 FIXTURE TYPE "XC" MTG. DETAIL

NO SCALE

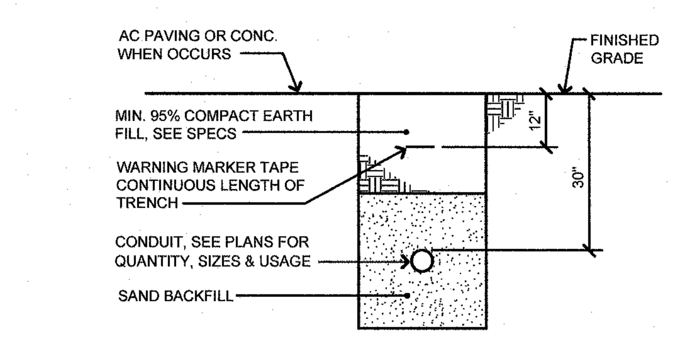


NOTES:

1. SAW CUT, TRENCH & BACKFILL FOR (N) CONDUITS. PATCH WALKWAY TO MATCH (E) SURROUNDING SURFACES. CARE SHALL BE TAKEN TO PROTECT EXISTING TREES. RESEED OR RESOD (E) DISTURBED PLANTED AREAS TO ARCHITECT'S SATISFACTION.
2. EXISTING A.C. SHALL BE CUT AND REMOVED IN SUCH A MANNER SO AS NOT TO TEAR BULGE OR DISPLACE ADJACENT PAVEMENT. EDGES SHALL BE CLEAN AND VERTICAL. ALL CUTS SHALL BE PARALLEL OR PERPENDICULAR TO STREET CENTERLINE, WHEN PRACTICAL.
3. BASE MATERIAL TO BE REPLACED TO THE DEPTH OF EXISTING BASE AND COMPACTED TO A MIN. 95% RELATIVE COMPACTION. A.C. MAY BE SUBSTITUTED FOR BASE MATERIAL. WHEN USED AS BACKFILL, CLASS 100-E-100 P.C.C. MAY BE SUBSTITUTED FOR BASE MATERIAL.
5. A TACK COAT OF ASPHALTIC EMULSION OR PAVING ASPHALT SHALL BE APPLIED TO EXISTING A.C. AT ALL CONTACT SURFACES, PRIOR TO RESURFACING.
6. ASPHALTIC CONCRETE RESURFACING. A) MINIMUM TOTAL THICKNESS SHALL BE ONE INCH GREATER THAN EXISTING A.C. B) A.C. SHALL BE HOT PLANT MIX.
7. ALL A.C. RESURFACING SHALL BE SEAL COATED WITH AN EMULSIFIED ASPHALT AND COVERED WITH CLEAN SAND.

## 5 TYPICAL TRENCH SECTION

NO SCALE

DETAIL NOTES:

1. SIZE(S) & MFGR. AS NOTED ON DRAWINGS.

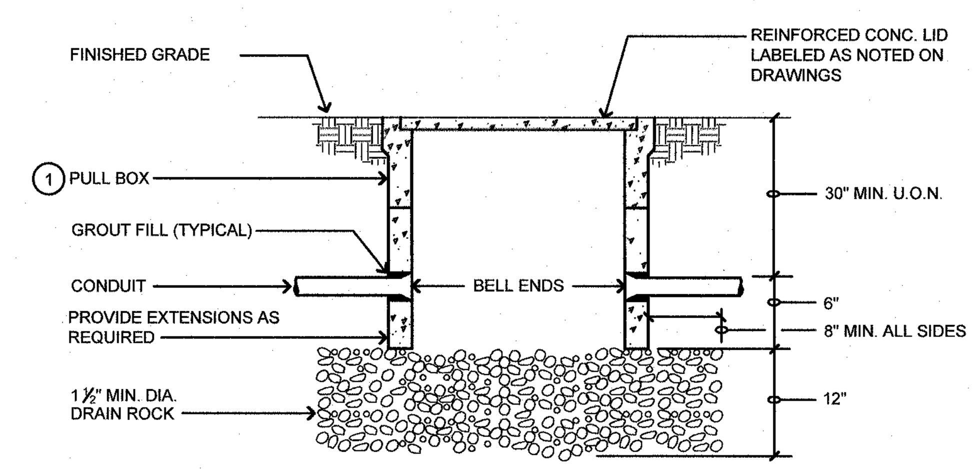


## 4 TYPICAL PULLBOX DETAIL

NO SCALE

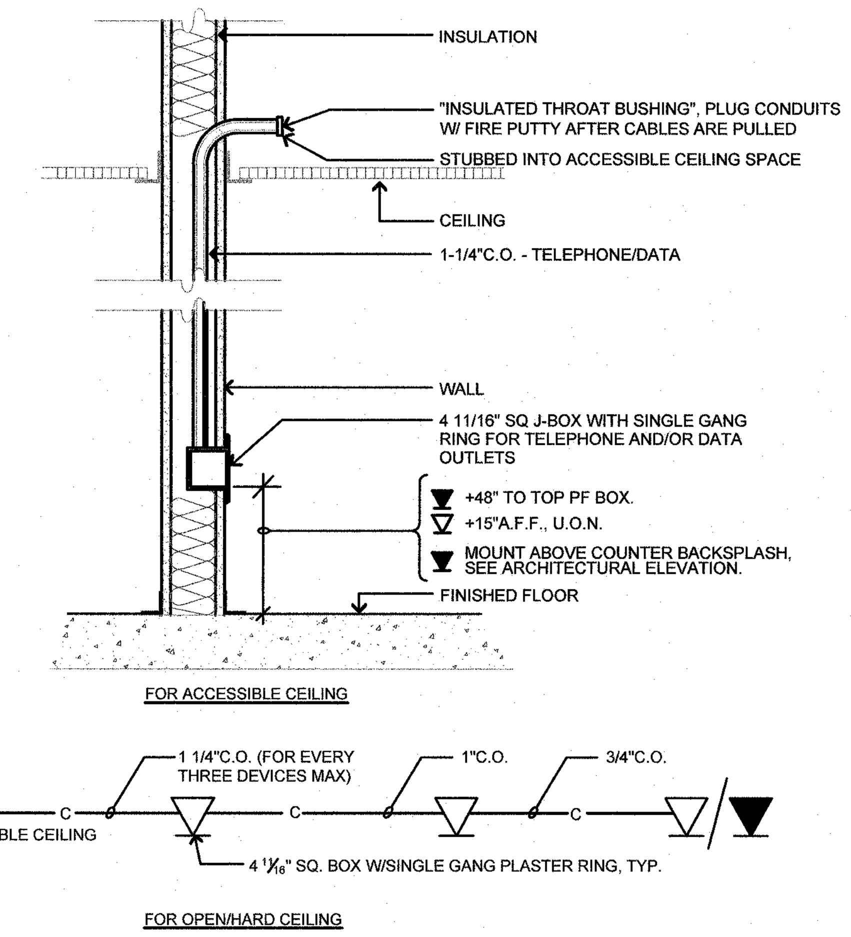


## 3 TELE/DATA/LOW VOLTAGE SWITCH OUTLET

NO SCALE

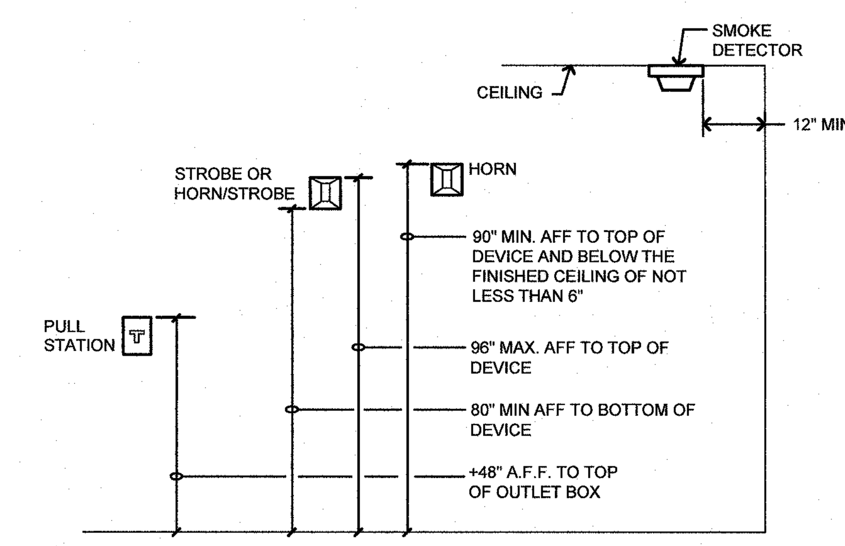


WHERE LOW CEILING HEIGHTS DO NOT PERMIT WALL MOUNTING AT MIN 80", WALL MOUNTED VISUAL APPLIANCES SHALL BE MOUNTED WITHIN 6" OF THE CEILING.

## 2 F.A. DEVICE MOUNTING ELEVATION

NO SCALE

SCOPE OF WORK:

ADDITIONAL OF NEW FIRE ALARM DEVICES TO EXISTING ADDRESSABLE FIRE ALARM SYSTEM INCLUDING ALL REQUIRED EQUIPMENT, PANELS, RACEWAYS, CONDUCTORS, CONNECTIONS, PROGRAMMING, TESTING AND APPROVAL BY THE LOCAL AUTHORITY HAVING JURISDICTION.

SEQUENCE OF OPERATION OF THE FIRE ALARM SYSTEM.

A. ACTIVATION OF ANY INITIATING DEVICE SHALL CAUSE ALL SIGNALS IN BUILDING TO ACTIVATE AND SOUND AND SIMULTANEOUSLY CAUSE AN ALARM TO BE SENT TO THE REMOTE MONITORING AGENCY.
B. THE ADDRESS CORRESPONDING TO THE INITIATION DEVICE IN ALARM SHALL APPEAR ON FIRE ALARM CONTROL PANEL LCD SCREEN.
C. CLOSING THE FIRE ALARM SPRINKLER OS & Y VALVE SHALL INITIATE A TROUBLE INDICATION AT FIRE ALARM CONTROL PANEL AND MONITORING STATION.
D. SHOULD AN OPEN, GROUND OR SHORT OCCUR IN THE WIRING SYSTEM, FIRE ALARM CONTROL PANEL WILL DETECT MALFUNCTION AND INITIATE A TROUBLE ALARM INDICATOR AT PANEL AND MONITORING STATION.
E. ONCE THE SYSTEM IS BACK TO NORMAL. THE PANEL WILL RESOUND FOR PROPER RESETTING.

FIRE ALARM NOTES:

1. EXISTING ADDRESSABLE FIRE ALARM CONTROL PANEL WITH COMMUNICATOR, INITIATING AND ANNUNCIATING DEVICES, CHARGER & BATTERIES.
2. THE CONTRACTOR SHALL PROVIDE AND INSTALL ALL MATERIALS, EQUIPMENT AND PROVIDE ALL LABOR REQUIRED AND NECESSARY TO COMPLETE THE WORK SHOWN ON THE DRAWINGS.
3. THE FIRE ALARM SYSTEM SHALL BE INSTALLED AS SPECIFIED IN ALL SECTIONS OF DIVISION 16 AND DIVISION 15, INCLUDING ALL OTHER WORK AND MISCELLANEOUS ITEMS NOT SPECIFICALLY MENTIONED BUT REASONABLY INFERRED FOR COMPLETE INSTALLATION.
4. ALL WIRE SHALL BE MINIMUM #12AWG FOR ANNUNCIATION CIRCUITS AND MINIMUM #16AWG TWISTED SHIELDED PAIR CABLE FOR INITIATING CIRCUITS. ALL WIRING SHALL BE ROUTED CONCEALED [INSTALLED IN CONDUIT].
5. SUBMIT COMPLETE FIRE ALARM SYSTEM PLANS INCLUDING RISER DIAGRAMS, BATTERY CALCS, VOLT DROP CALCS, WIRING DIAGRAMS, ETC. TO LOCAL FIRE AUTHORITY REVIEW AND APPROVAL PRIOR TO START OF INSTALLATION.
6. FINAL CONNECTIONS OF DEVICES AND EQUIPMENT SHALL BE BY A FIRE ALARM CONTRACTOR WHO PERFORMS SUCH WORK ON A REGULAR BASIS.
7. FINAL TESTING SHALL BE WITNESSED BY THE LOCAL FIRE AGENCY.
8. PROVIDE MANUALS AND MINIMUM 2-HOURS OPERATING INSTRUCTION TO OWNER.
9. PROVIDE BATTERY BACKUP FOR 24 HOURS OF STANDBY & 5 MINUTES OF ALARM.
10. VERIFY COLOR (RED OR WHITE) OF NOTIFICATION APPLIANCES WITH ARCHITECT.

JOB COPY
These plans must be kept on the job at all times.
CITY OF MORGAN HILL
BUILDING DIVISION

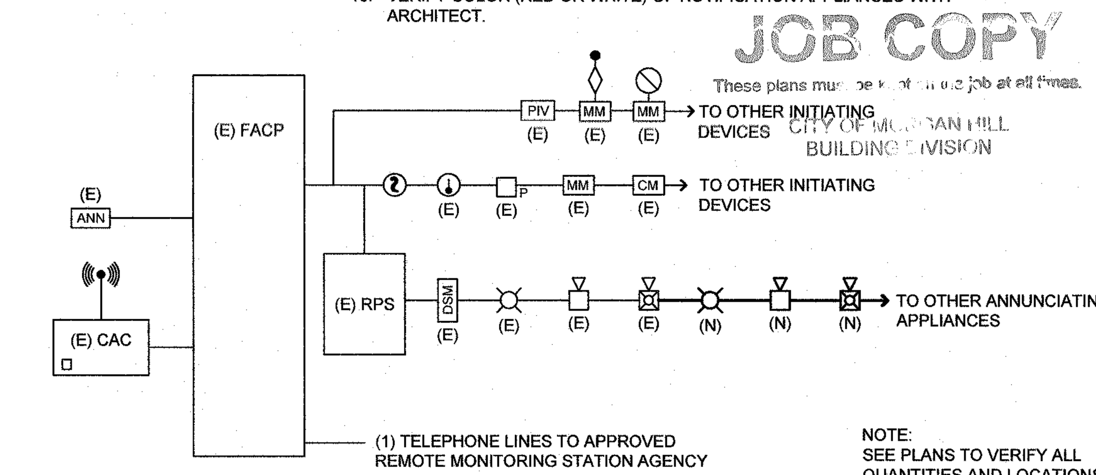


NOTE:
SEE PLANS TO VERIFY ALL QUANTITIES AND LOCATIONS OF EQUIPMENT AND DEVICES REQUIRED FOR THE PROJECT.

## 1 TYPICAL FIRE ALARM RISER DIAGRAM

NO SCALE

WESTON MILES ARCHITECTS
17500 Depot Street, Suite #200
Morgan Hill, CA 95037
1 • 408 • 779 • 6686
• Architecture • Landscape •

NOT VALID WITHOUT WET SIGNATURE

AURUM CONSULTING ENGINEERS MONTEREY BAY, INC.
Project No. 18217.00
60 Garden Court • Suite 210 • Monterey, CA 93940
T.831.646.3330 • F.831.646.3336 • www.acemb.com

These drawings are instruments of service and are the property of AURUM CONSULTING ENGINEERS MONTEREY BAY, INC. All designs and other information in the drawings are for use on the specified project and shall not be used otherwise without the expressed written permission of AURUM CONSULTING ENGINEERS MONTEREY BAY, INC.

REVISIONS

1 BACK CHECK 1/30/19
2
3

# ELECTRICAL DETAILS

CENTENNIAL RECREATION CENTER EXPANSION PROJECT

CITY OF MORGAN HILL
171 W EDMUNDSON AVE, MORGAN HILL, CA 95037

These drawings are instruments of service and are the property of WESTON MILES ARCHITECTS, INC. All designs and other information on the drawings are for use on the specified project and shall not be used otherwise without the expressed written permission of WESTON MILES ARCHITECTS, INC.
Written dimensions on these drawings shall have precedence over scaled dimensions. Contractors shall verify and be responsible for all dimensions and conditions on the job and this office shall be notified of any variations from the dimensions and conditions shown by these drawings. Shop details shall be submitted to this office for approval before proceeding with fabrication.
© Copyrighted 2018

DATE: 7/5/2018
JOB NO: 18001

E6.1

# INTERIOR LIGHTING & RECEPTACLE CONTROLS SEQUENCE OF OPERATION

| ROOM TYPE | OCCUPANCY SENSOR - MANUAL ON | OCCUPANCY SENSOR - AUTO ON | OCCUPANCY SENSOR - AUTO OFF | OCCUPANCY SENSOR - PARTIAL OFF | CONTINUOUS DIMMING TO OFF | ON/OFF SWITCH | MULTI ZONE DIMMING | AUTO TIME CLOCK-OFF | AUTO TIME CLOCK-ON | DAY LIGHT SENSOR - AUTO DIMMING (WHERE SHOWN ON PLANS) | OVERRIDE SWITCH CONTROL | SET LIGHT LEVEL FC TO IES RECOMMENDATIONS | SET LIGHT LEVEL TO 100% ON | ACCEPTANCE TESTING OF CONTROLS BY CLCATT | REMARKS |
|---|---|---|---|---|---|---|---|---|---|---|---|---|---|---|---|
| OPEN OFFICE | | | | | • | | • | • | • | • | • | • | | • | 'ON' AND 'OFF' TIME SET PER OWNER. |
| PRIVATE OFFICE < 250 FT$^2$ | • | | • | | • | | | | | | | • | | • | |
| PRIVATE OFFICE > 250 FT$^2$ | • | | • | | • | | • | | | • | | • | | • | |
| MEETING ROOMS | | • | • | | • | | • | | | • | | | • | • | |
| BREAK ROOMS | • | | • | | • | | • | | | • | | | • | • | |
| KITCHEN | | • | • | | • | | • | | | • | | | • | • | |
| CORRIDORS/HALLWAYS/LIBRARY STACKS/WAREHOUSE AISLE | | • | | • | | • | | • | • | | • | | • | • | DIM TO 50% WHEN UNOCCUPIED/'ON' AND 'OFF' TIME SET PER OWNER. |
| SMALL RESTROOMS < 100 FT$^2$ | • | | • | | | • | | | | | | | • | • | |
| LARGE RESTROOMS | | • | • | | • | | | | | | | | • | • | |
| RECEPTION/LOBBY | | | | | | | • | • | • | • | • | | • | • | 'ON' AND 'OFF' TIME SET PER OWNER. |
| ELECTRICAL/MECHANICAL/UTILITY ROOMS | | | | | | • | • | • | • | • | • | | • | • | 'ON' AND 'OFF' TIME SET PER OWNER. |
| EXAM ROOMS | | • | • | | • | | • | | | • | | | • | • | |
| PROCEDURE ROOMS | | • | • | | • | | • | | | • | | | • | • | |
| CLASSROOMS | | • | • | | • | | • | | | | | • | | • | |
| MULTI PURPOSE ROOM < 1000 FT$^2$ | | • | • | | • | | • | | | | | | • | • | |
| CONFERENCE ROOM | | • | • | | • | | • | | | | | | • | • | |
| PRIVATE OFFICE WITHOUT DAY LIGHTING | • | | • | | • | | | | | | | • | | • | |
| ANY SPACE < 100 FT$^2$ | • | | • | | | • | | | | | | | • | • | |
| CONTROLLED RECEPTACLES | | • | • | | | | | | | | | | | • | |

**GENERAL NOTES:**

A. LIGHTING CONTROL SYSTEMS SHALL BE CAPABLE OF MEETING DEMAND RESPONSE REQUIREMENTS OF CALIFORNIA TITLE 24.

B. DAYLIGHT SENSORS & DEMAND RESPONSE REQUIREMENTS ARE EXEMPT FROM THIS PROJECT PER CALIFORNIA TITLE 24 "TABLE 141.0-E CONTROL REQUIREMENTS FOR ENTIRE LUMINAIRE ALTERATIONS" LIGHTING POWER DENSITY IS ≤ 85% OF ALLOWANCE .

GENERAL DETAIL NOTES:

A. ALL PART #s ARE WATTSTOPPER.

B. THIS DETAIL IS FOR GENERAL INFORMATION ONLY. CONTRACTOR SHALL OBTAIN AND FURNISH AUTOCAD DRAWINGS FROM FACTORY REPRESENTATIVE PER SPECIFICATION SECTION 16950,1.05B.

C. FOR CORRIDOR/HALLWAY/STAIRWELL LOCATIONS CONTROLLED BY OCCUPANCY SENSOR. SENSOR SHALL REDUCE THE LIGHTING POWER IN CORRIDOR/HALLWAY/STAIRWELL TO 50% MINIMUM WHEN SPACE IS UNOCCUPIED.

D. WHEN NETWORKING, ENSURE ONLY ONE (1) NETWORK BRIDGE PER ROOM.

## ⬡ SHEET NOTES

1. FOR DEVICE QUANTITY AND LOCATION; SEE LIGHTING FLOOR PLANS.
2. TWO ZONE DAY LIGHT PHOTOCELL; SEE PLANS FOR QUANTITIES & LOCATIONS. PROGRAM ZONE 1 (PRIMARY DAY LIT ZONE) AT 40FC AND ZONE 2 (SECONDARY DAY LIT ZONE) DIMMED TO 25% LESS THAN ZONE 1.
3. LMRC-211 IS A (1) LOAD ROOM CONTROLLER THAT WILL CONTROL A SINGLE (1) 20A CIRCUIT 0-10V CONTROL.
4. LMRC-212 IS A (2) LOAD CONTROLLER THAT WILL CONTROL A SINGLE (1) 20A CIRCUIT 0-10V CONTROL.
5. 0-10V DIMMER SWITCH TO CONTROL (2) ZONES.
6. 0-10V DIMMER SWITCH TO CONTROL (3) ZONES.

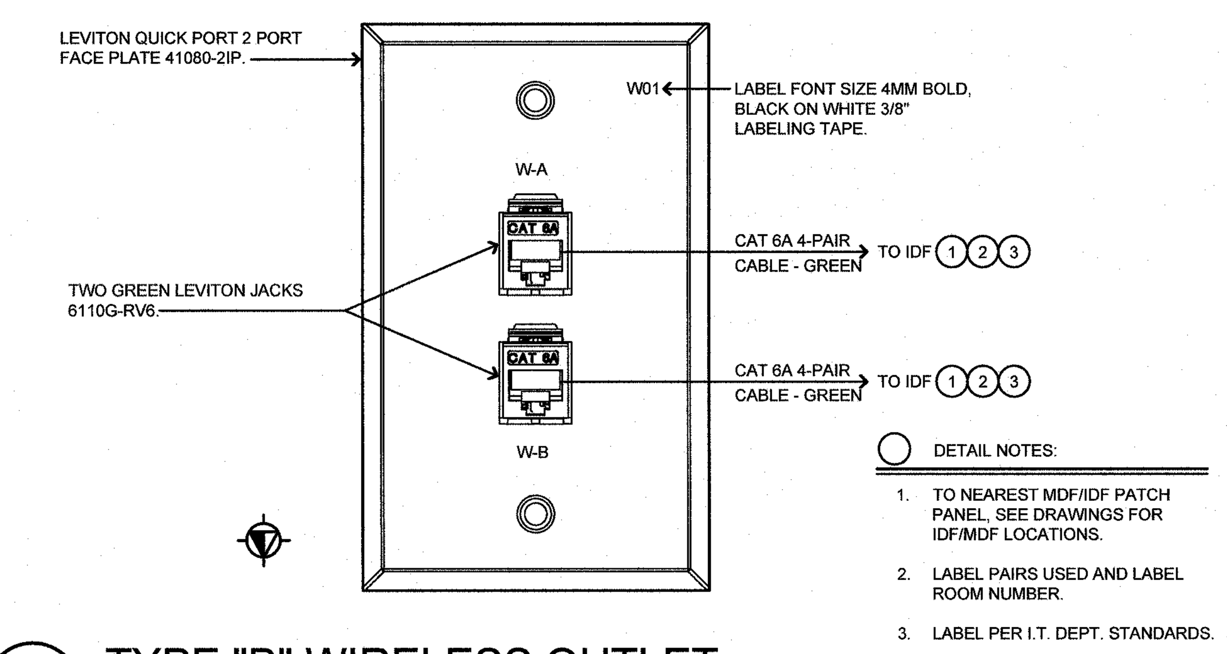


○ DETAIL NOTES:

1. TO NEAREST MDF/IDF PATCH PANEL, SEE DRAWINGS FOR IDF/MDF LOCATIONS.
2. LABEL PAIRS USED AND LABEL ROOM NUMBER.
3. LABEL PER I.T. DEPT. STANDARDS.

## 6 TYPE "B" WIRELESS OUTLET

NO SCALE

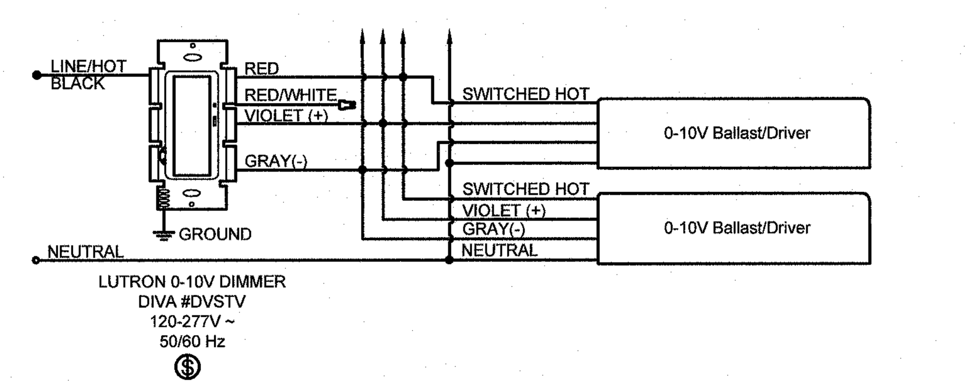


## 3 0-10V DIMMING WIRING DIAGRAM

NO SCALE

○ DETAIL NOTES:

1. SEE PLAN FOR QUANTITIES AND LOCATIONS. SECURITY KEY PADS, MOTION SENSORS AND WIRING TO BE INSTALLED BY INTRUSION ALARM CONTRACTOR.
2. ELECTRICAL CONTRACTOR SHALL INSTALL JUNCTION BOX FOR EACH DEVICE WHERE NOTED ON PLANS.
3. CONTRACTOR SHALL PROVIDE & INSTALL ¾" CONDUIT TO EACH DEVICE.

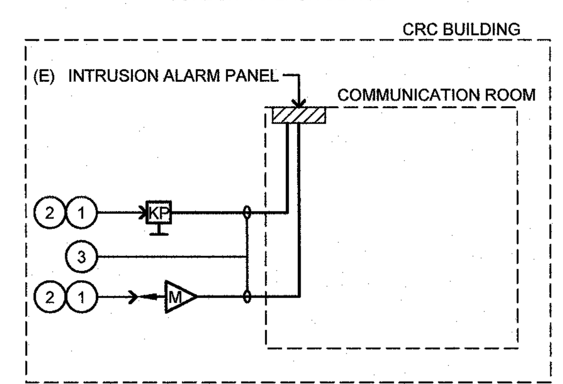


## 8 INTRUSION ALARM RISER DIAGRAM

NO SCALE

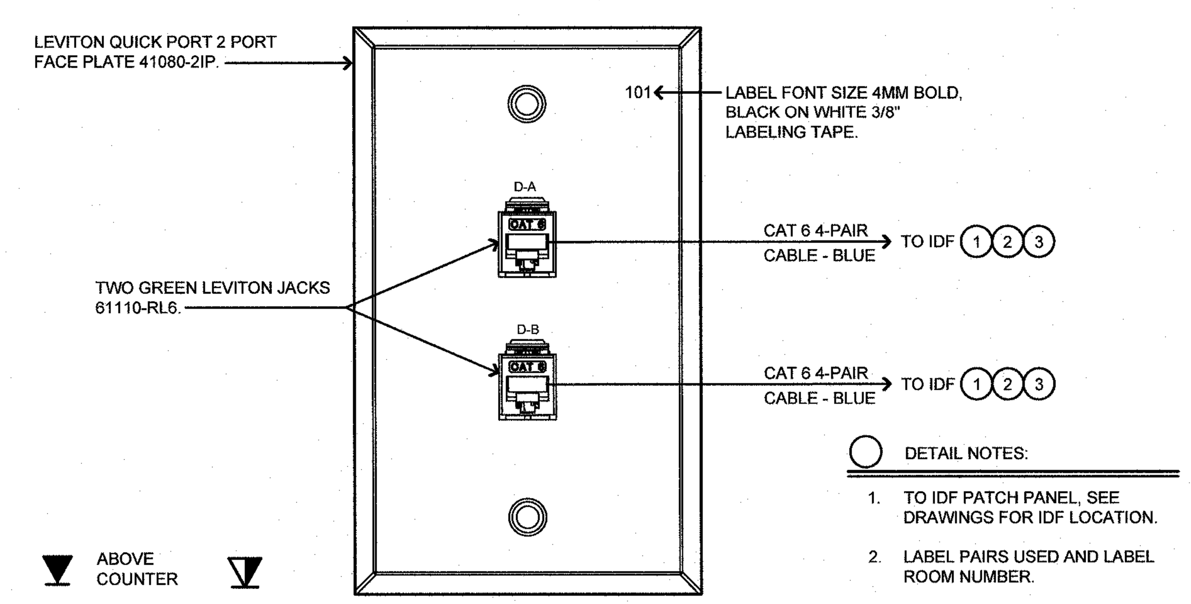


○ DETAIL NOTES:

1. TO IDF PATCH PANEL, SEE DRAWINGS FOR IDF LOCATION.
2. LABEL PAIRS USED AND LABEL ROOM NUMBER.
3. LABEL PER I.T. DEPT. STANDARDS.

## 5 TYPE "A" WORKSTATION OUTLET

NO SCALE

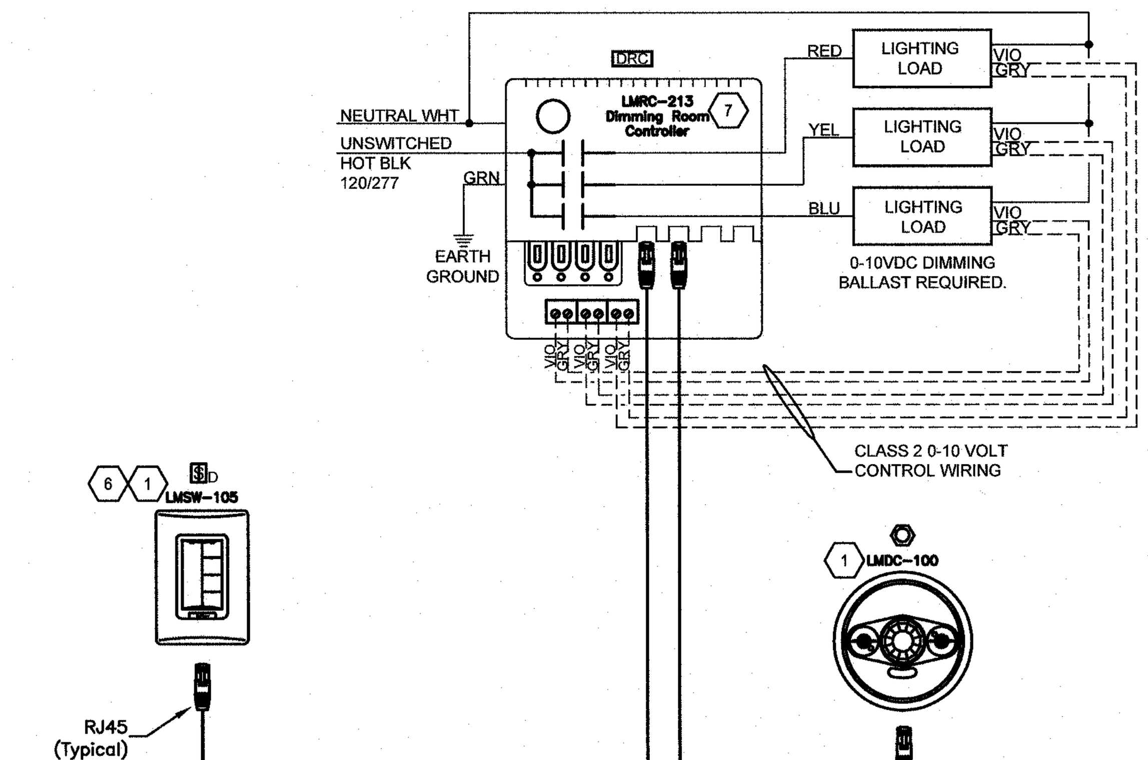


## 2 3-ZONE DIMMING LIGHTING CONTROL

NO SCALE

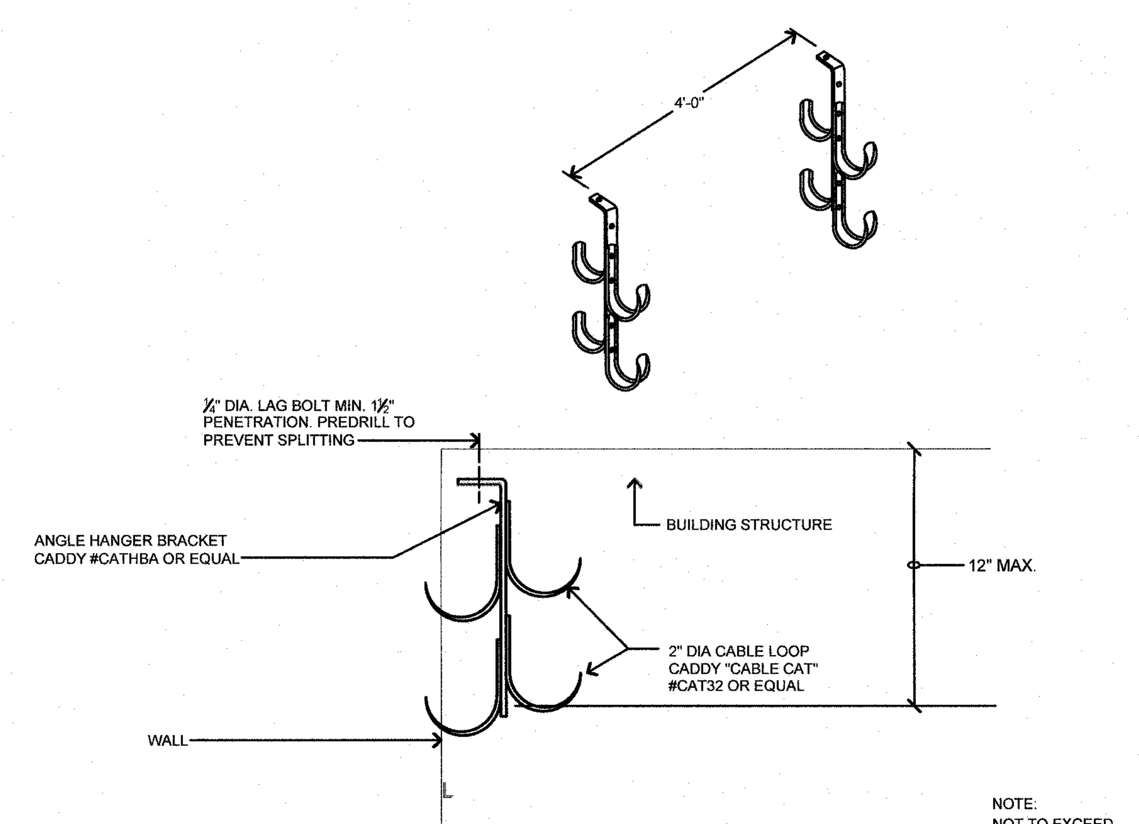


NOTE:
NOT TO EXCEED 12" SAG IN CABLE.

## 7 LOW VOLTAGE CABLE SUPPORT DETAIL

NO SCALE

FINAL DETERMINATION OF CIRCUITING, VOLTAGE AND QUANTITY OF POWER PACKS REQUIRED, AND SETTING OF SENSITIVITY/TIME ADJUSTMENTS ARE THE RESPONSIBILITY OF THE INSTALLING CONTRACTOR. AND/OR COMMISSIONING AGENT, MANUFACTURER'S INSTALLATION INSTRUCTIONS SHOULD BE ADHERED TO.

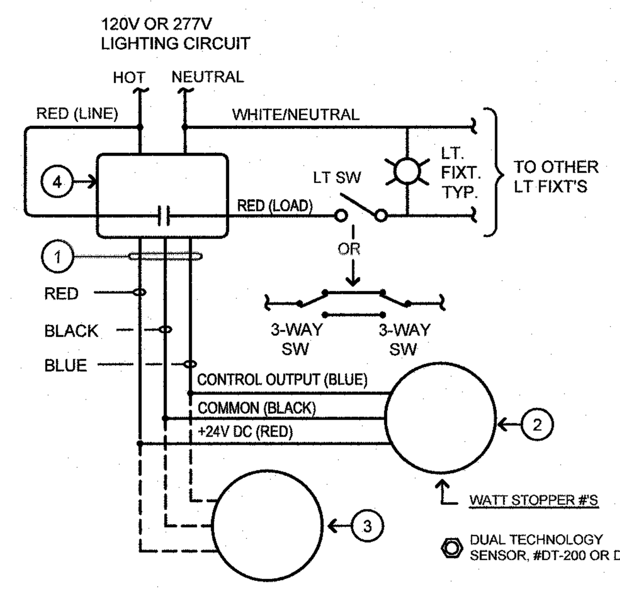


NOTES:

1. ALL SENSOR LOCATIONS ARE APPROXIMATE, REFER TO MANUFACTURER'S INSTALLATION INSTRUCTIONS PRIOR TO INSTALLATION.
2. DUAL TECHNOLOGY CEILING MOUNT SENSORS REQUIRE THEY BE LOCATED NO CLOSER THAN 6' FROM AIR SUPPLY/RETURN REGISTERS.
3. CONTRACTOR IS RESPONSIBLE FOR: PROPER SENSITIVITY & TIME DELAY SETTINGS & MANUFACTURER'S RECOMMENDED PLACEMENT, FIELD VERIFICATION OF CIRCUITS WITH RESPECT TO POWER PACK PLACEMENT.
4. CONTRACTOR IS RESPONSIBLE FOR FIELD VERIFICATION OF REQUIRED NUMBER OF POWER PACKS.

A. ONE POWER PACK IS REQUIRED FOR EACH CIRCUIT THAT IS TO BE CONTROLLED.

B. DEPENDING ON TYPE OF SENSOR UP TO 3 SENSORS CAN BE WIRED IN PARALLEL TO A SINGLE POWER PACK.

○ DETAIL NOTES:

1. LOW VOLTAGE WIRING
2. SENSOR.
3. ADDITIONAL SENSOR
4. POWER PACK

## 4 OCCUPANCY SENSOR WIRING DIAGRAM

NO SCALE

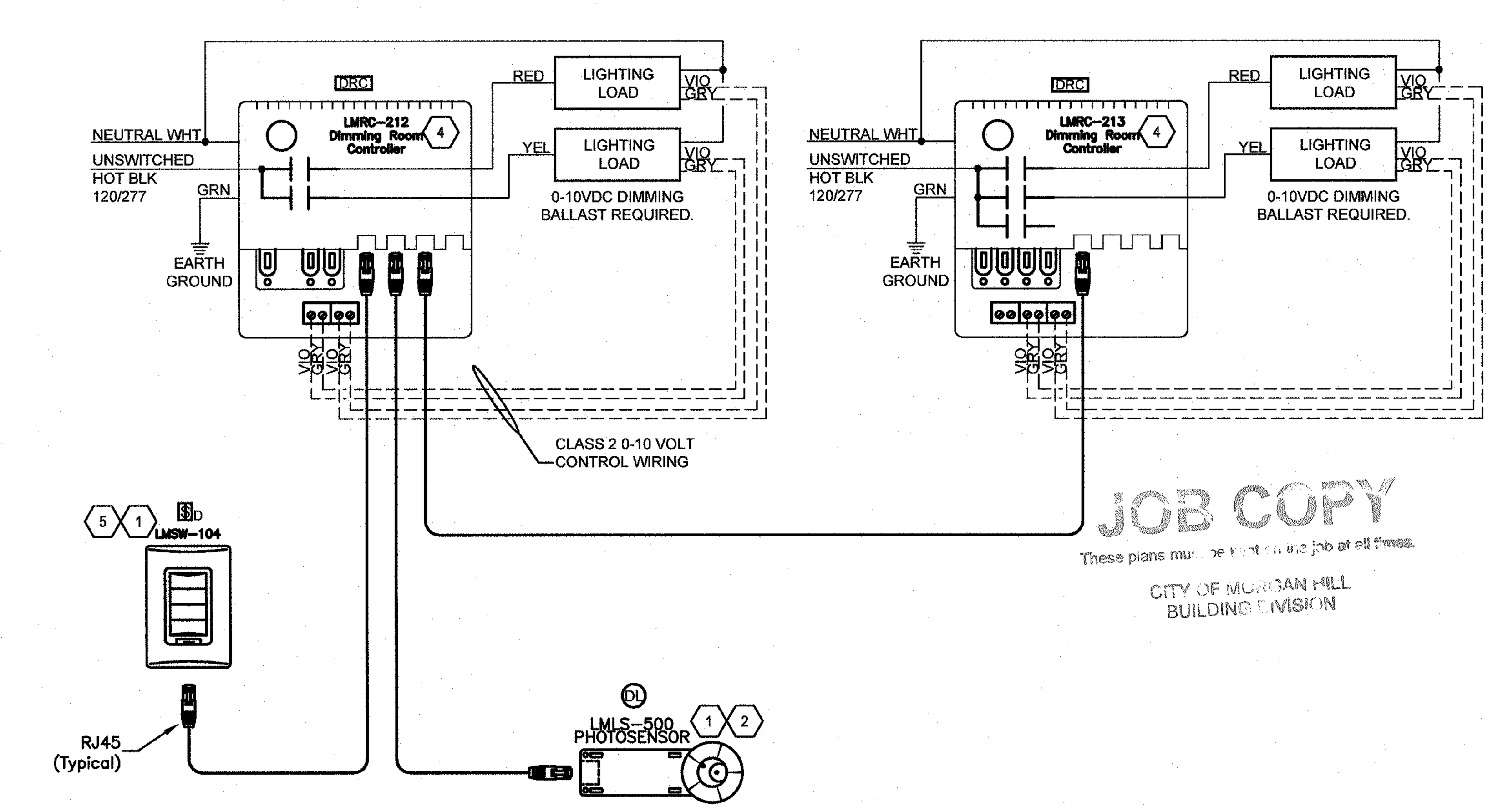


JOB COPY
These plans must be kept on the job at all times.
CITY OF MORGAN HILL
BUILDING DIVISION

## 1 5-ZONE DIMMING LIGHTING CONTROL WITH DAYLIGHTING

NO SCALE

WESTON MILES
ARCHITECTS
17500 Depot Street, Suite #200
Morgan Hill, CA 95037
1 •408 • 779 • 6686
• Architecture • Landscape •

NOT VALID WITHOUT WET SIGNATURE

AURUM CONSULTING ENGINEERS MONTEREY BAY, INC.
Project No. 18217.00
60 Garden Court • Suite 210 • Monterey, CA 93940
T 831.646.3330 • F 831.646.3336 • www.acemb.com

These drawings are instruments of service and are the property of AURUM CONSULTING ENGINEERS MONTEREY BAY, INC. All designs and other information in the drawings are for use on the specified project and shall not be used otherwise without the expressed written permission of AURUM CONSULTING ENGINEERS MONTEREY BAY, INC.

REVISIONS

| | | |
|---|---|---|
| 1 | BACK CHECK | 1/30/19 |
| 2 | | |
| 3 | | |

# ELECTRICAL DETAILS

## CENTENNIAL RECREATION CENTER EXPANSION PROJECT

CITY OF MORGAN HILL
171 W EDMUNDSON AVE, MORGAN HILL, CA 95037

These drawings are instruments of service and are the property of WESTON MILES ARCHITECTS, INC. All designs and other information on the drawings are for use on the specified project and shall not be used otherwise without the expressed written permission of WESTON MILES ARCHITECTS, INC.

Written dimensions on these drawings shall have precedence over scaled dimensions. Contractors shall verify and be responsible for all dimensions and conditions on the job and this office shall be notified of any variations from the dimensions and conditions shown by these drawings. Shop details shall be submitted to this office for approval before proceeding with fabrication.

© Copyrighted 2018

DATE: 7/5/2018

JOB NO: 18001

E6.2

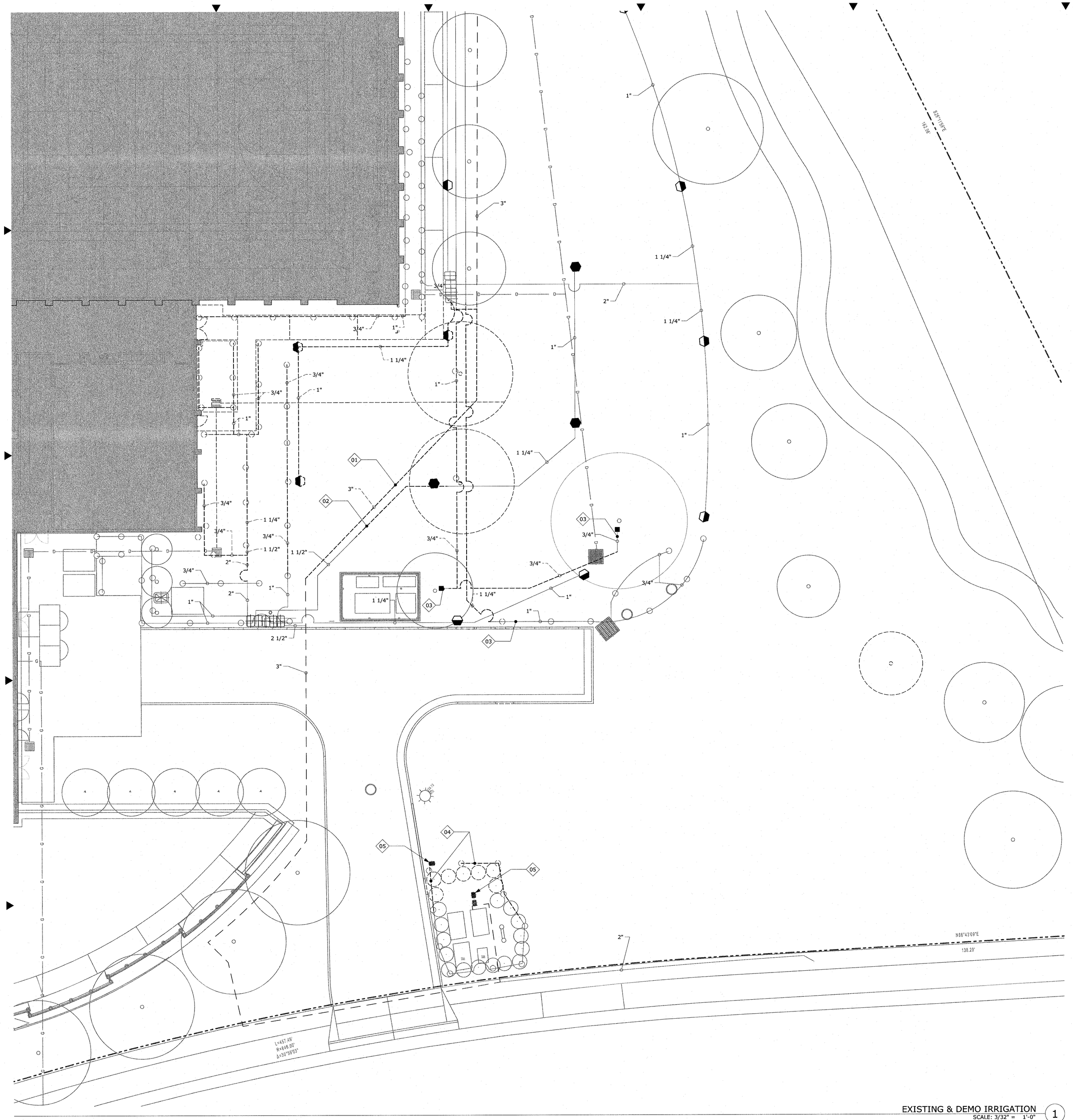


EXISTING & DEMO IRRIGATION (1)
SCALE: 3/32" = 1'-0"

## GENERAL NOTES

1. SLEEVE TO BE TWICE THE SIZE OF THE PIPES
2. ALL IRRIGATION LINES UNDER PAVING TO BE INSTALLED WITHIN A SLEEVE. IRRIGATION LINES IN SAME PROXIMITY TO BE INSTALLED IN SAME SLEEVE
3. FOR CONTROLLER INSTALLATION, SEE DETAIL 3/L3.0
4. FOR REMOTE CONTROL VALVE INSTALLATION, SEE DETAIL 13/L3.0
5. FOR QUICK-COUPLER INSTALLATION, SEE DETAIL 12/L3.0
6. FOR QUADRA/OCTA BUBBLER INSTALLATION, SEE DETAIL 4/L3.0
7. FOR IRRIGATION LINE INSTALLATION, SEE DETAIL 2/L3.0
8. FOR POP-UP TREE BUBBLER INSTALLATION, SEE DETAIL 6/L3.0
9. FOR ROTOR SPRAY INSTALLATION, SEE DETAIL 7/L3.0
10. FOR REDUCED PRESSURE BACKFLOW PREVENTOR SEE DETAIL14/L3.0

## DEMOLITION KEY NOTES

| | |
|---|---|
| 01 | <E> 3" MAIN LINE TO BE REMOVED AS SHOWN & REPLACED AS SHOWN ON L1.2 OR TEMPORARILY CONNECTED SO AS NOT TO INTERRUPT WATER TO LANDSCAPING ON NORTH SIDE OF BUILDING |
| 02 | <E> LATERAL TO BE REMOVED AS SHOWN & REPLACED AS SHOWN ON L1.2 OR TEMPORARILY CONNECTED SO AS NOT TO INTERRUPT WATER TO LANDSCAPING ON NORTH SIDE OF BUILDING |
| 03 | <E> LATERAL TO BE CONNECTED TO (N) LINE, SEE L1.2 |
| 04 | REMOVE LINE AS INDICATED. CAP AT LOCATION SHOWN ON L1.2. |
| 05 | RELOCATE BOX AS REQUIRED |

## SYMBOL LEGEND

- - - - - - ITEMS TO BE DEMOLISHED

JOB COPY
These plans must be kept on the job at all times.
CITY OF MORGAN HILL
BUILDING DIVISION

WESTON MILES
ARCHITECTS
17500 Depot Street, Suite #200
Morgan Hill, CA 95037
T •408 • 779 • 6686
• Architecture • Landscape •

REGISTERED ARCHITECT
STUART E. WESTON
EXP. 1-31-20
STATE OF CALIFORNIA
NOT VALID WITHOUT SIGNATURE

REVISIONS
1 01/30/2019 PLAN CHECK #1
2
3

# EXISTING & DEMO IRRIGATION PLAN

## CENTENNIAL RECREATION CENTER EXPANSION PROJECT

CITY OF MORGAN HILL
171 W EDMUNDSON AVE, MORGAN HILL, CA 95037

These drawings are instruments of service and are the property of WESTON MILES ARCHITECTS, INC. All designs and other information on the drawings are for use on the specified project and shall not be used otherwise without the expressed written permission of WESTON MILES ARCHITECTS, INC.

Written dimensions on these drawings shall have precedence over scaled dimensions. Contractor shall verify and be responsible for all dimensions and conditions on the job and this office shall be notified of any variations from the dimensions and conditions shown on these drawings. Shop details shall be submitted to this office for approval before proceeding with fabrication.

© Copyrighted 2018

DATE: 11/9/2018

JOB NO: 18001

L1.1

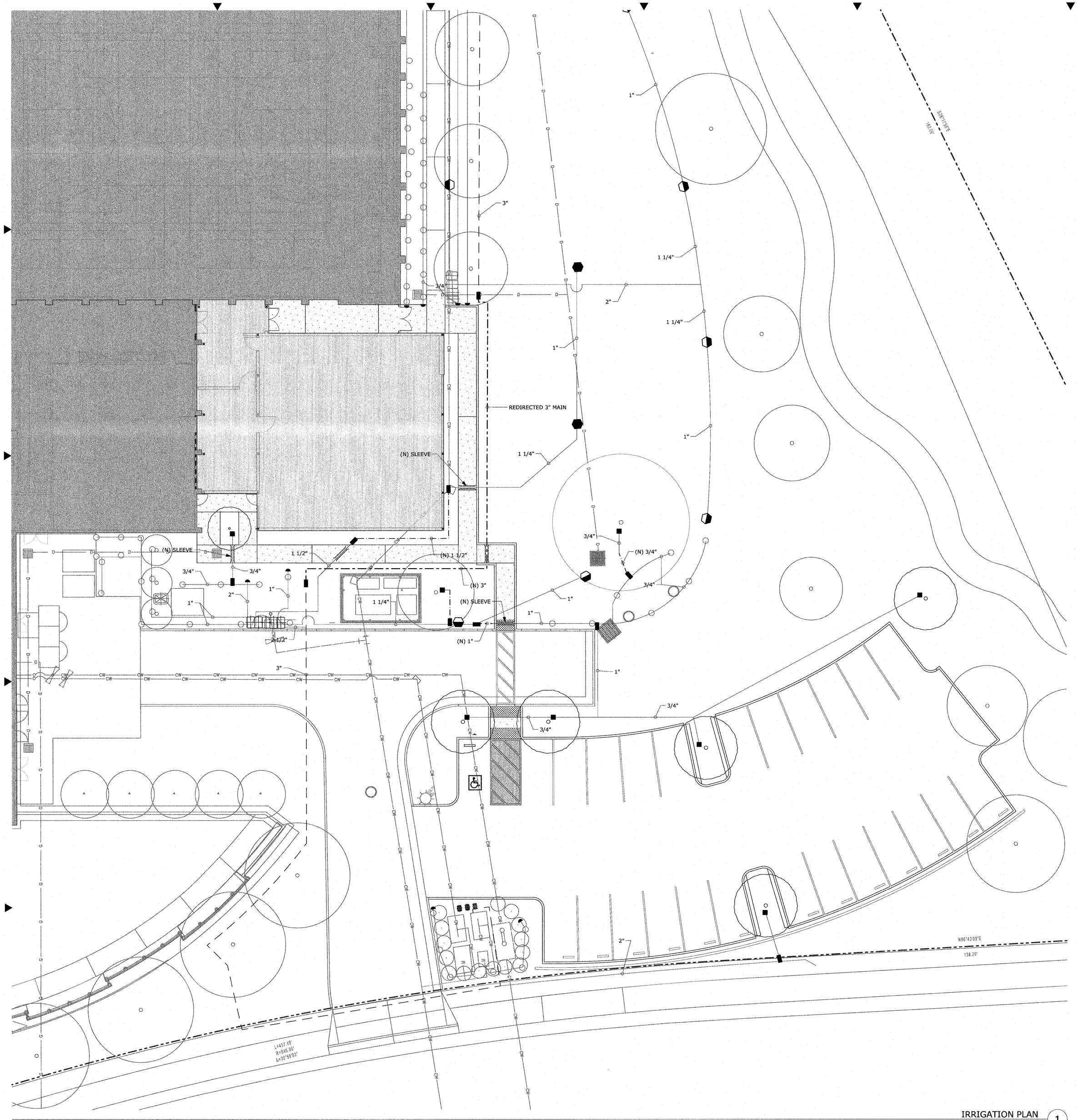


IRRIGATION PLAN
SCALE: 3/32" = 1'-0"
1

## GENERAL NOTES

1. SLEEVE TO BE TWICE THE SIZE OF THE PIPES
2. ALL IRRIGATION LINES UNDER PAVING TO BE INSTALLED WITHIN A SLEEVE. IRRIGATION LINES IN SAME PROXIMITY TO BE INSTALLED IN SAME SLEEVE
3. FOR CONTROLLER INSTALLATION, SEE DETAIL 3/L3.0
4. FOR REMOTE CONTROL VALVE INSTALLATION, SEE DETAIL 13/L3.0
5. FOR QUICK-COUPLER INSTALLATION, SEE DETAIL 12/L3.0
6. FOR QUADRA/OCTA BUBBLER INSTALLATION, SEE DETAIL 4/L3.0
7. FOR IRRIGATION LINE INSTALLATION, SEE DETAIL 2/L3.0
8. FOR POP-UP TREE BUBBLER INSTALLATION, SEE DETAIL 6/L3.0
9. FOR ROTOR SPRAY INSTALLATION, SEE DETAIL 7/L3.0
10. FOR REDUCED PRESSURE BACKFLOW PREVENTOR SEE DETAIL14/L3.0

## KEY NOTES

##

01 NONE

## SYMBOL LEGEND

- PVC SLEEVE
- <E> MAIN LINE
- <E> LATERAL LINE
- (N) MAIN LINE
- (N) LATERAL LINE
- (N) CHRISTY BOX
- CAP <E> LINE
- 12" POP-UP ROTOR
- 12" POP-UP ROTOR
- 4" POP-UP SPRAY TURF SPRINKLER
- TREE BUBBLER

JOB COPY
These plans mu[illegible] job at all times.
CITY OF MORGAN HILL
BUILDING DIVISION

WESTON MILES
ARCHITECTS
17500 Depot Street, Suite #200
Morgan Hill, CA 95037
1 • 408 • 779 • 6686
• Architecture • Landscape •

NOT VALID WITHOUT SIGNATURE

REVISIONS
1 01/30/2019 PLAN CHECK #1
2
3

# IRRIGATION PLAN

## CENTENNIAL RECREATION CENTER EXPANSION PROJECT

CITY OF MORGAN HILL
171 W EDMUNDSON AVE, MORGAN HILL, CA 95037

These drawings are instruments of service and are the property of WESTON MILES ARCHITECTS, INC. The designs and other information on the drawings are for use on the specified project and shall not be used otherwise without the expressed written permission of WESTON MILES ARCHITECTS, INC.

Written dimensions on these drawings shall have precedence over scaled dimensions. Contractors shall verify and be responsible for all dimensions and conditions on the job site and this office shall be notified of any variations from the dimensions and conditions shown by these drawings. Shop drawings must be submitted to this office for approval before proceeding with fabrication.

© Copyrighted 2018

DATE: 11/9/2018

JOB NO: 18001

L1.2

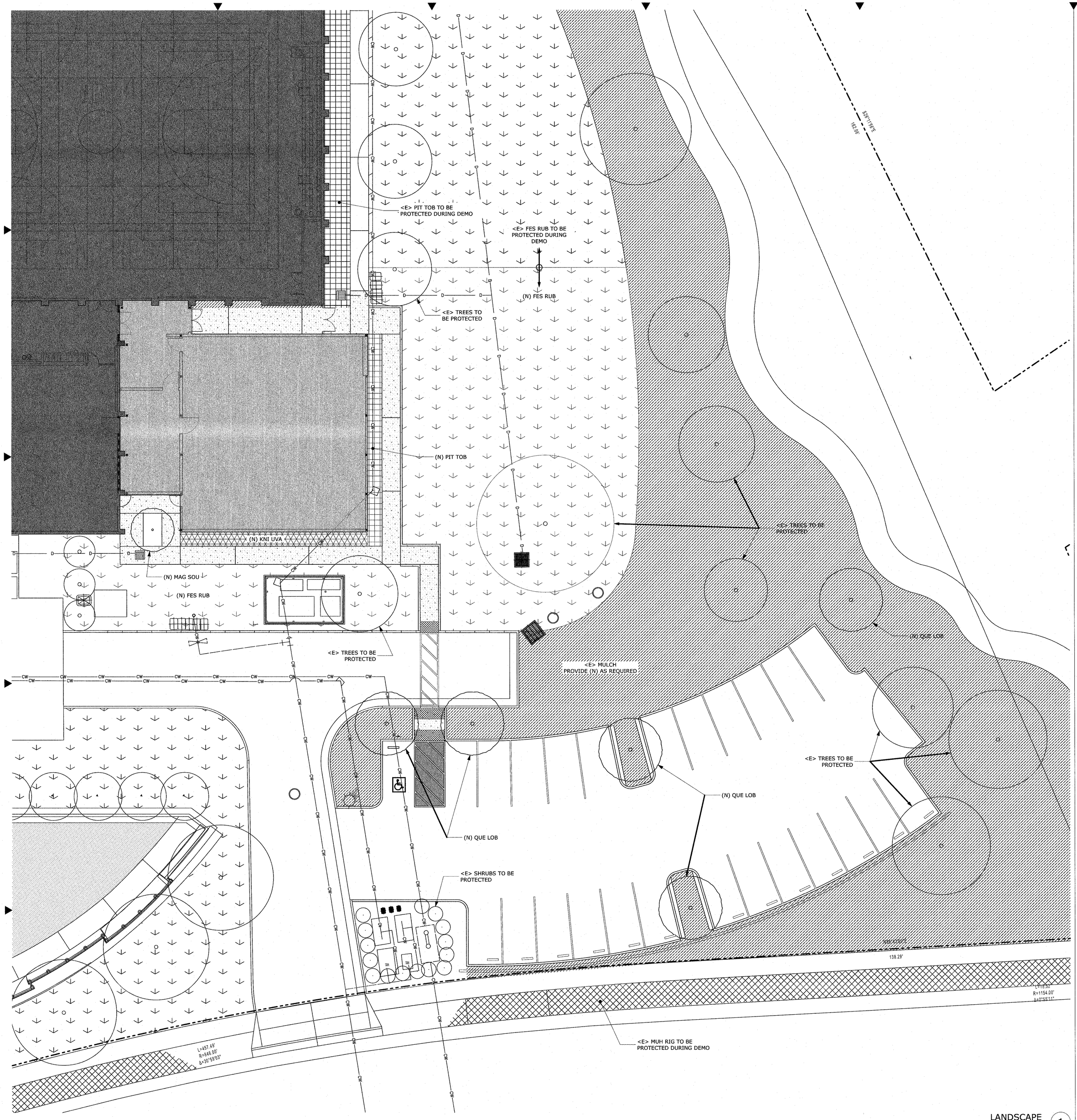


LANDSCAPE
SCALE: 3/32" = 1'-0" (1)

## GENERAL NOTES

1. ALL TREES TO REMAIN UNLESS OTHERWISE NOTED.
2. CONTRACTOR SHALL VERIFY LOCATION AND DEPTH OF ALL <E> UTILITIES PRIOR TO ANY EXCAVATION.
3. ALL SPOILS, DEBRIS, AND INCIDENTAL ITEMS TO BE REMOVED SHALL BE HAULED OFF SITE BY CONTRACTOR AND BE DISPOSED OF IN A LAWFUL MANNER AS IT ACCUMULATES.
4. CONTRACTOR SHALL TAKE CARE NOT TO DAMAGE IN ANY WAY, ANY <E>ELEMENTS NOT DESIGNATED FOR REMOVAL. SUCH DAMAGE IS THE RESPONSIBILITY OF THE CONTRACTOR AT NO ADDITIONAL COST TO THE OWNER.
5. SHUT OFF ALL WATER, GAS & ELECTRIC WILL NEED TO BE COORDINATED W/<E>SITE OPERATIONS
6. THE <E> BUILDINGS ARE TO REMAIN IN USE DURING CONSTRUCTION.
7. THE SITE MUST BE CLEANED AT THE END OF EACH BUSINESS DAY.
8. CONTRACTOR TO MAINTAIN A SAFE, SECURE SITE.
9. THIS DRAWING REFLECTS THE <E> SITE CONDITIONS TO THE BEST OF OUR KNOWLEDGE
10. CONTRACTOR TO COORDINATE FINAL LOCATION/LAYOUT OF ALL PLANTS W/ARCHITECT ONSITE PRIOR TO PLANTING

## PLANTING LEGEND

| SYMBOL | BOTANICAL NAME | COMMON NAME | SIZE | QTY | REMARKS |
|---|---|---|---|---|---|
| **GRASSES AND GROUND COVERS** | | | | | |
| FES RUB | FESTUCA RUBRA 'MOLATE' | MOLATE RED FESCUE | SEEDED | - | - |
| MULCH | | ORGANIC MULCH | - | - | - |
| **SHRUBS** | | | | | |
| PIT TOB | PITTOSPORUM TOBIRA 'WHEELER'S DWARF' | TOBIRA | 1 GAL. 3' O/C | # | SEE DETAIL 1/L3.0 |
| MUH RIG | MUHLENBERGIA RIGENS | DEER GRASS | 1 GAL. 4' O/C | # | SEE DETAIL 1/L3.0 |
| KNI UVA | KNIPHOFIA UVARIA | RED-HOT POKER | 1 GAL. 4' O/C | # | SEE DETAIL 1/L3.0 |
| **TREES** | | | | | |
| QUE LOB | QUERCUS LOBATA | VALLEY OAK (2) | 15 GAL. | 5 | SEE DETAIL 6/L3.0 |
| MAG SOU | MAGNOLIA SOULANGEANA 'LENNEI' | SAUCER MAGNOLIA | 24" BOX | 1 | SEE DETAIL 6/L3.0 |

JOB COPY
These plans must be kept on the job at all times.
CITY OF MORGAN HILL
BUILDING DIVISION

WESTON MILES
ARCHITECTS
17500 Depot Street, Suite #200
Morgan Hill, CA 95037
1 •408 • 779 • 6686
• Architecture • Landscape •

LICENSED ARCHITECT
JEFF E. WESTON
C-17514
STATE OF CALIFORNIA
NOT VALID WITHOUT SIGNATURE

REVISIONS
1 01/30/2019 PLAN CHECK #1
2 03/27/2019 PLAN CHECK #2
3

# LANDSCAPE PLAN

## CENTENNIAL RECREATION CENTER EXPANSION PROJECT

CITY OF MORGAN HILL
171 W EDMUNDSON AVE, MORGAN HILL, CA 95037

These drawings are instruments of service and are the property of WESTON MILES ARCHITECTS, INC. All designs and plans shown on these drawings are prepared for the specified project and shall not be used otherwise without the expressed written permission of WESTON MILES ARCHITECTS, INC.

Written dimensions on these drawings shall have precedence over scaled dimensions. Contractors shall verify and be responsible for all dimensions and conditions on the job and report any errors, omissions or conflicting conditions, discrepancies and conditions shown by these drawings. Shop details shall be submitted to this office for approval before proceeding with fabrication.

© Copyrighted 2018

DATE: 11/9/2018

JOB NO: 18001

1 L2.1

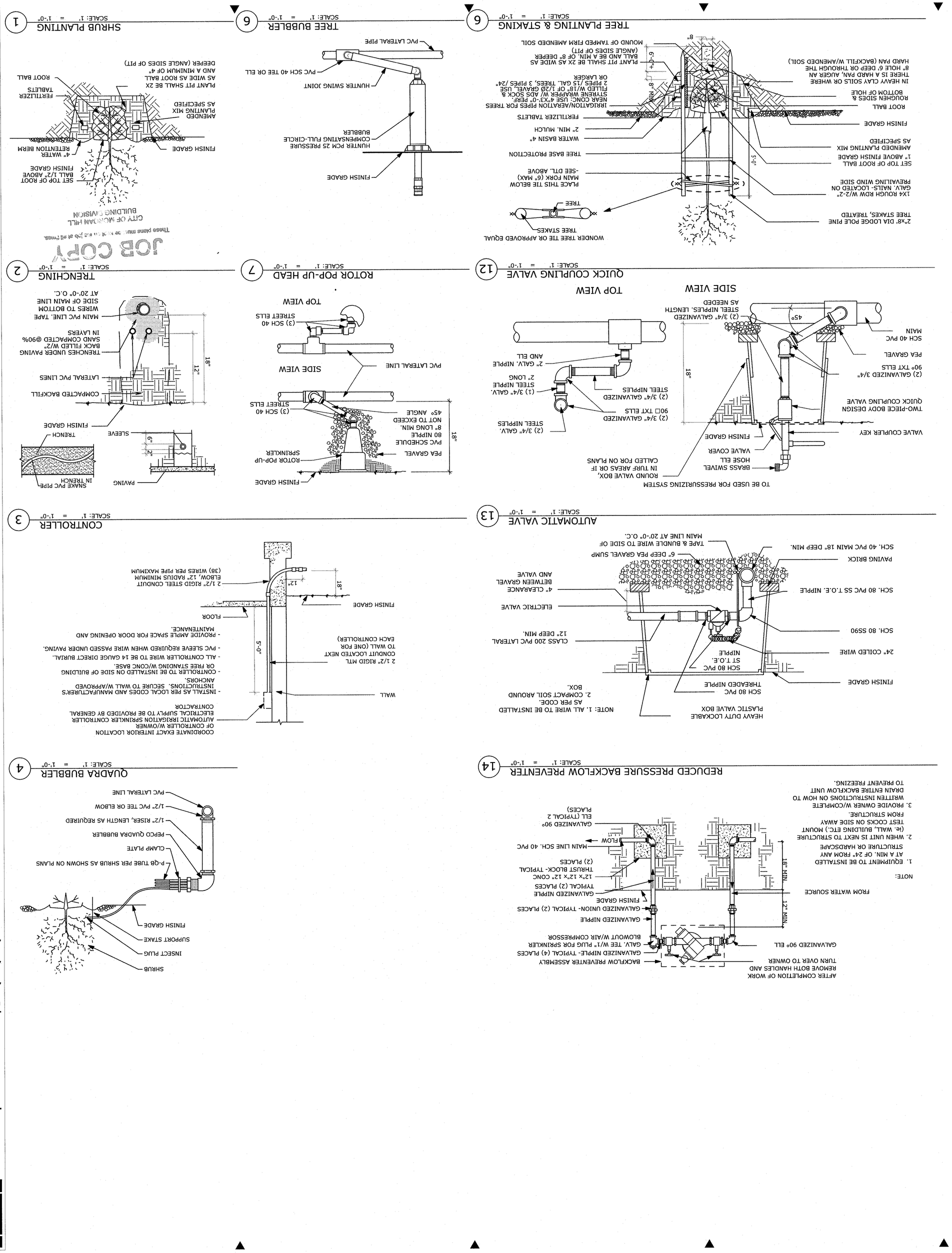


JOB COPY
THESE PLANS MUST BE ON THE JOB AT ALL TIMES
CITY OF MORGAN HILL
BUILDING & INSPECTION

These drawings and specifications are the property of WESTON MILES ARCHITECTS, INC. All rights reserved. Written dimensions shall govern over scaled dimensions. Contractor shall verify and be responsible for all dimensions and conditions. Discrepancies must be reported to this office before proceeding with fabrication.
© Copyright 2018

| | |
|---|---|
| DATE: | 11/9/2018 |
| JOB NO: | 18001 |

L3.0

1

# LANDSCAPE DETAILS

CENTENNIAL RECREATION CENTER EXPANSION PROJECT

CITY OF MORGAN HILL
171 W EDMUNDSON AVE, MORGAN HILL, CA 95037

REVISIONS

| | |
|---|---|
| 1 | 01/30/2019 PLAN CHECK #1 |
| 2 | |
| 3 | |

NOT VALID WITHOUT SIGNATURE

WESTON MILES
ARCHITECTS
17500 Depot Street, Suite #200
Morgan Hill, CA 95037
t 408 • 779 • 6686
• Architecture • Landscape •